9-6-91
Vol. 56 No. 173

federal register

Friday
September 6, 1991

United States
Government
Printing Office
SUPERINTENDENT
OF DOCUMENTS
Washington, DC 20402

OFFICIAL BUSINESS
Penalty for private use, $300

SECOND CLASS NEWSPAPER

Postage and Fees Paid
U.S. Government Printing Office
(ISSN 0097-6326)

9-6-91
Vol. 56 No. 173
Pages 43995-45880

federal register

Friday
September 6, 1991

Briefings on How To Use the Federal Register
For information on briefings in Denver, CO and Washington, DC, see announcement on the inside cover of this issue.

FEDERAL REGISTER Published daily, Monday through Friday, (not published on Saturdays, Sundays, or on official holidays), by the Office of the Federal Register, National Archives and Records Administration, Washington, DC 20408, under the Federal Register Act (49 Stat. 500, as amended; 44 U.S.C. Ch. 15) and the regulations of the Administrative Committee of the Federal Register (1 CFR Ch. I). Distribution is made only by the Superintendent of Documents, U.S. Government Printing Office, Washington, DC 20402.

The **Federal Register** provides a uniform system for making available to the public regulations and legal notices issued by Federal agencies. These include Presidential proclamations and Executive Orders and Federal agency documents having general applicability and legal effect, documents required to be published by act of Congress and other Federal agency documents of public interest. Documents are on file for public inspection in the Office of the Federal Register the day before they are published, unless earlier filing is requested by the issuing agency.

The seal of the National Archives and Records Administration authenticates this issue of the **Federal Register** as the official serial publication established under the Federal Register Act. 44 U.S.C. 1507 provides that the contents of the **Federal Register** shall be judicially noticed.

The **Federal Register** will be furnished by mail to subscribers for $340 per year in paper form; $195 per year in microfiche form; or $37,500 per year for the magnetic tape. Six-month subscriptions are also available at one-half the annual rate. The charge for individual copies in paper or microfiche form is $1.50 for each issue, or $1.50 for each group of pages as actually bound, or $175.00 per magnetic tape. Remit check or money order, made payable to the Superintendent of Documents, U.S. Government Printing Office, Washington, DC 20402, or charge to your GPO Deposit Account or VISA or Mastercard.

There are no restrictions on the republication of material appearing in the **Federal Register.**

How To Cite This Publication: Use the volume number and the page number. Example: 56 FR 12345.

SUBSCRIPTIONS AND COPIES

PUBLIC	
Subscriptions:	
Paper or fiche	**202–783–3238**
Magnetic tapes	**275–0186**
Problems with public subscriptions	**275–3054**
Single copies/back copies:	
Paper or fiche	**783–3238**
Magnetic tapes	**275–0186**
Problems with public single copies	**275–3050**
FEDERAL AGENCIES	
Subscriptions:	
Paper or fiche	**523–5240**
Magnetic tapes	**275–0186**
Problems with Federal agency subscriptions	**523–5243**

For other telephone numbers, see the Reader Aids section at the end of this issue.

THE FEDERAL REGISTER
WHAT IT IS AND HOW TO USE IT

FOR: Any person who uses the Federal Register and Code of Federal Regulations.

WHO: The Office of the Federal Register.

WHAT: Free public briefings (approximately 3 hours) to present:
1. The regulatory process, with a focus on the Federal Register system and the public's role in the development of regulations.
2. The relationship between the Federal Register and Code of Federal Regulations.
3. The important elements of typical Federal Register documents.
4. An introduction to the finding aids of the FR/CFR system.

WHY: To provide the public with access to information necessary to research Federal agency regulations which directly affect them. There will be no discussion of specific agency regulations.

DENVER, CO

WHEN: September 26, at 9:00 am
WHERE: Denver Federal Center, Building 20
(E8 entrance on 2nd Street)
Conference Room B1409, Denver, CO
RESERVATIONS: Federal Information Center
1–800–359–3997

WASHINGTON, DC

WHEN: September 30, at 9:00 am
WHERE: Office of the Federal Register
First Floor Conference Room
1100 L Street, NW, Washington, DC
RESERVATIONS: 202–523–5240

Contents

Federal Register
Vol. 56, No. 173
Friday, September 6, 1991

ACTION
NOTICES
Agency information collection activities under OMB review, 44055

Agriculture Department
See also Forest Service; Soil Conservation Service
NOTICES
Agency information collection activities under OMB review, 44070
Meetings:
Agribusiness Promotion Council, 44070

Air Force Department
NOTICES
Environmental statements; availability, etc.:
Base realignments and closures—
March Air Force Base, CA, 44078

Alcohol, Drug Abuse, and Mental Health Administration
NOTICES
Meetings; advisory committees:
October, 44093

Architectural and Transportation Barriers Compliance Board
RULES
Americans with Disabilities Act; implementation:
Accessibility guidelines—
Transportation facilities, 45500
Transportation vehicles, 45530

Blind and Other Severely Handicapped, Committee for Purchase From
See Committee for Purchase From the Blind and Other Severely Handicapped

Civil Rights Commission
NOTICES
Meetings; Sunshine Act, 44125

Coast Guard
PROPOSED RULES
Pollution:
Tank vessels carrying oil; double hull standards, 44051

Commerce Department
See Export Administration Bureau; International Trade Administration; National Oceanic and Atmospheric Administration

Committee for Purchase From the Blind and Other Severely Handicapped
NOTICES
Procurement list; additions and deletions, 44077 (2 documents)

Defense Department
See also Air Force Department
RULES
Acquisition regulations:
General Accounting Office protest procedures; implementation, 45832
Civilian health and medical program of uniformed services (CHAMPUS):
Individual health providers; reimbursement, 44001
Veterans:
Educational assistance test program; increase in rates payable, 44007

Employment and Training Administration
NOTICES
Adjustment assistance:
Allegheny Ludlum Steel Corp. et al., 44106
Russell Drilling Co., 44106
Grant and cooperative agreement awards:
Job Training Partnership Act—
Foundation for Advancements in Science and Education, 44106
Meetings:
Achieving Necessary Skills Commission, 44107

Employment Standards Administration
See also Wage and Hour Division
NOTICES
Minimum wages for Federal and federally-assisted construction; general wage determination decisions, 44104

Energy Department
NOTICES
Environmental restoration; preliminary design report availability, 44078
Natural gas exportation and importation:
Natural Gas Clearinghouse, 44080
TranAm Energy, Inc., 44081
Westar Marketing Co., 44082

Environmental Protection Agency
PROPOSED RULES
Air pollution control; new motor vehicles and engines:
California nonroad engine and vehicle standards, 45866
NOTICES
Air pollution control; new motor vehicles and engines:
California pollution control standards, 45873
Environmental statements; availability, etc.:
Agency statements—
Comment availability, 44083
Weekly receipts, 44084

Equal Employment Opportunity Commission
NOTICES
Meetings; Sunshine Act, 44125

Executive Office of the Presiden'
See Presidential Documents

Export Administration Bureau
NOTICES
Meetings:
Computer Systems Technical Advisory Committee, 44074
Semiconductor Technical Advisory Committee, 44074
Telecommunications Equipment Technical Advisory Committee, 44074

Family Support Administration
See Refugee Resettlement Office

Federal Aviation Administration
NOTICES
Airport noise compatibility program:
Des Moines International Airport, IA, 44119

Federal Communications Commission
RULES
Practice and procedure:
Broadcast licensing proceedings, misconduct; policy statement, 44008
Radio stations; table of assignments:
Illinois, 44009
Puerto Rico et al., 44010
Virginia, 44010
PROPOSED RULES
Common carrier services:
Interstate special access service; expanded interconnection, 44053
Radio stations; table of assignments:
Pennsylvania, 44054

Federal Deposit Insurance Corporation
NOTICES
Meetings; Sunshine Act, 44125
(2 documents)

Federal Highway Administration
NOTICES
Environmental statements; availability, etc.:
Gaston County et al., NC, 44120

Federal Maritime Commission
RULES
Maritime carriers in foreign commerce:
Conditions favorable to shipping, actions to adjust or meet—
United States/Ecuador trade, 44008

Federal Reserve System
NOTICES
Federal banking and thrift agencies; capital and accounting standards differences; report to congressional committees, 44084
Meetings; Sunshine Act, 44126
(2 documents)
Applications, hearings, determinations, etc.:
First Manistique Corp., 44091
Frances Gourley Lott Trust et al., 44092
Heartland Financial USA, Inc., et al., 44092
Sumitomo Bank, Ltd., 44092

Forest Service
NOTICES
Environmental statements; availability, etc.:
San Bernardino National Forest, CA, 44070
Tongass National Forest, AK, 44071, 44072
(2 documents)

Health and Human Services Department
See Alcohol, Drug Abuse, and Mental Health Administration; National Institutes of Health; Public Health Service; Refugee Resettlement Office

Health Resources and Services Administration
See Public Health Service

Hearings and Appeals Office, Interior Department
PROPOSED RULES
Hearings and appeals procedures:
Surface coal mining; special rules, 45806

Housing and Urban Development Department
PROPOSED RULES
Public and Indian housing:
Vacancy units included in eligibility computation under Performance Funding System, 45814
NOTICES
Grants and cooperative agreements; availability, etc.:
Facilities to assist homeless—
Excess and surplus Federal property, 44096

Interior Department
See Hearings and Appeals Office, Interior Department; Land Management Bureau; National Park Service; Surface Mining Reclamation and Enforcement Office

International Trade Administration
NOTICES
Antidumping:
Clear sheet glass from Taiwan, 44075
Meetings:
President's Export Council, 44076

International Trade Commission
NOTICES
Import investigations:
Gene amplification thermal cyclers and subassemblies from United Kingdom, 44101

Justice Department
PROPOSED RULES
Privacy Act; implementation, 44049
NOTICES
Privacy Act:
Systems of records, 44101

Labor Department
See also Employment and Training Administration; Employment Standards Administration; Labor Statistics Bureau; Wage and Hour Division
NOTICES
Agency information collection activities under OMB review, 44102

Labor Statistics Bureau
NOTICES
Committees; establishment, renewal, termination, etc.:
Occupational Safety and Health Statistics State Research Advisory Committee, 44104

Land Management Bureau
NOTICES
Meetings:
Lakeview District Grazing Advisory Board, 44098
Miles City District Advisory Council, 44098
Opening of public lands:
California, 44098
Montana, 44099
Resource management plans, etc.:
Safford District, AZ, 44099
Withdrawal and reservation of lands:
California, 44100
Oregon, 44100

Legal Services Corporation
NOTICES
Meetings; Sunshine Act, 44126

Maritime Administration
NOTICES
Applications, hearings, determinations, etc.:
Sulphur Carriers, Inc., 44121

Martin Luther King, Jr. Federal Holiday Commission
NOTICES
Meetings, 44107

Migrant Education, National Commission
See National Commission on Migrant Education

National Aeronautics and Space Administration
NOTICES
Meetings:
Space Science and Applications Advisory Committee, 44107

National Commission on Migrant Education
NOTICES
Meetings, 44108

National Credit Union Administration
RULES
Credit unions:
Insurance requirements and eligible obligations; accounts insured by National Credit Union Share Insurance Fund
Correction, 44128

National Highway Traffic Safety Administration
NOTICES
Heavy truck safety improvements plan; publication, 44120

National Institutes of Health
NOTICES
Committees; establishment, renewal, termination, etc.:
Comparative Medicine Review Committee, 44094
Meetings:
National Heart, Lung, and Blood Institute, 44094, 44095 (6 documents)

National Oceanic and Atmospheric Administration
NOTICES
Environmental statements; availability, etc.:
Delaware National Estuarine Research Reserve, DE, 44076
Meetings:
Gulf of Mexico Fishery Management Council, 44076

National Park Service
NOTICES
Environmental statements; availability, etc.:
Lake Meredith National Recreation Area, TX, 44100
Meetings:
White House Preservation Committee, 44100

Nuclear Regulatory Commission
NOTICES
Electric utilities:
Economic performance incentives, safety impacts; policy statement availability; correction, 44128

Oversight Board
RULES
Minority and women contracting outreach program; establishment, 43997

Personnel Management Office
RULES
Reduction in force; minimum 60 day written notice period, 43995
PROPOSED RULES
Training for shortage occupations; "academic degree training" requirement exemption, 44012

Presidential Documents
PROCLAMATIONS
Special observances:
Citizenship Day and Constitution Week (Proc. 6330), 45879

Public Health Service
See also Alcohol, Drug Abuse, and Mental Health Administration; National Institutes of Health
NOTICES
Agency information collection activities under OMB review, 44095

Railroad Retirement Board
NOTICES
Agency information collection activities under OMB review, 44108

Refugee Resettlement Office
NOTICES
Grants and cooperative agreements; availability, etc.:
Refugee resettlement program, 45836

Research and Special Programs Administration
RULES
Tariffs:
Airline time and mileage guides, 44000

Resolution Trust Corporation
NOTICES
Coastal Barrier Improvement Act; property availability:
Condo I, WI, 44122
Estrella/Hidden Valley, AZ, 44123
Mariner Saudi Joint Venture, AL, 44123
Meetings; Sunshine Act, 44127

Securities and Exchange Commission
PROPOSED RULES
Investment companies:
Broker-dealer registration, uniform form; amendments, 44029
Securities:
Reporting and recordkeeping requirements; broker-dealer's records, 44014
NOTICES
Agency information collection activities under OMB review, 44108
Self-regulatory organizations; proposed rule changes:
National Association of Securities Dealers, Inc., 44108
National Securities Clearing Corp. et al., 44116
Applications, hearings, determinations, etc.:
Public utility holding company filings, 44117

Small Business Administration
NOTICES
Disaster loan areas:
Massachusetts et al., 44118
Rhode Island et al., 44119

Soil Conservation Service
NOTICES
Environmental statements; availability, etc.:
McCoy Wash Watershed Project, CA, 44073

Surface Mining Reclamation and Enforcement Office
PROPOSED RULES
Initial and permanent regulatory programs:
Permanent and temporary impoundments, 44049
Surface coal mining and reclamation operations—
Applicant/violator computer system (AVS); ownership and control determination procedures, 45780
Permanent program and abandoned mine land reclamation plan submissions:
Alabama, 44050

Tennessee Valley Authority
NOTICES
Meetings; Sunshine Act, 44128

Transportation Department
See also Coast Guard; Federal Aviation Administration; Federal Highway Administration; Maritime Administration; National Highway Traffic Safety Administration; Research and Special Programs Administration
RULES
Americans with Disabilities Act; implementation:
Accessibility guidelines—
Transportation vehicles, 45584
NOTICES
Environmental statements; availability, etc.:
Commercial space reentry vehicle program; correction, 44128

Treasury Department
NOTICES
Agency information collection activities under OMB review, 44121, 44122
(2 documents)
Notes, Treasury:
AE-1993 series, 44121
S-1996 series, 44121

Veterans Affairs Department
RULES
Acquisition regulations:
Procurement preference program expansion, 44010
Vocational rehabilitation and education:
Veterans education—
Educational assistance test program; increase in rates payable, 44007

Wage and Hour Division
RULES
Fair Labor Standards Act:
Public sector employers; exemptions from minimum wage and overtime compensation, 45824
PROPOSED RULES
Fair Labor Standards Act:
Public sector employers; exemptions from minimum wage and overtime compensation, 45828

Separate Parts In This Issue

Part II
Architectural and Transportation Barriers Compliance Board, 45500

Part III
Architectural and Transportation Barriers Compliance Board, 45530

Part IV
Department of Transportation, 45584

Part V
Department of the Interior, Office of Surface Mining Reclamation and Enforcement, 45780

Part VI
Department of the Interior, Office of Hearings and Appeals, 45806

Part VII
Department of Housing and Urban Development, 45814

Part VIII
Department of Labor, Employment Standards Administration, Wage and Hour Division, 45824

Part IX
Department of Labor, Employment Standards Administration, Wage and Hour Division, 45828

Part X
Department of Defense, 45832

Part XI
Department of Health and Human Services, Office of Refugee Resettlement, 45836

Part XII
Environmental Protection Agency, 45866

Part XIII
The President, 45879

Reader Aids
Additional information, including a list of public laws, telephone numbers, and finding aids, appears in the Reader Aids section at the end of this issue.

CFR PARTS AFFECTED IN THIS ISSUE

A cumulative list of the parts affected this month can be found in the Reader Aids section at the end of this issue.

3 CFR
Proclamations:
6330 45879

5 CFR
351 43995
Proposed Rules:
410 44012

12 CFR
741 44128
1507 43997

14 CFR
221 44000

17 CFR
Proposed Rules:
240 44014
249 (2 documents) 44014, 44029

24 CFR
Proposed Rules:
905 45814
990 45814

28 CFR
Proposed Rules:
16 44049

29 CFR
541 45824
Proposed Rules:
541 45828

30 CFR
Proposed Rules:
701 (2 documents) 44049, 45780
773 45780
778 45780
780 44049
784 44049
816 44049
817 44049
840 45780
843 45780
901 44050

32 CFR
199 44001

33 CFR
Proposed Rules:
157 44051

36 CFR
1191 45500
1192 45530

38 CFR
21 44007

40 CFR
Proposed Rules:
85 45866

43 CFR
Proposed Rules:
4 45806

46 CFR
586 44008

47 CFR
1 44008
73 (3 documents) 44009, 44010
Proposed Rules:
69 44053
73 44054

48 CFR
233 45832
819 44010
852 44010

49 CFR
27 45584
37 45584
38 45584

Rules and Regulations

Federal Register
Vol. 56, No. 173
Friday, September 6, 1991

This section of the FEDERAL REGISTER contains regulatory documents having general applicability and legal effect, most of which are keyed to and codified in the Code of Federal Regulations, which is published under 50 titles pursuant to 44 U.S.C. 1510.
The Code of Federal Regulations is sold by the Superintendent of Documents. Prices of new books are listed in the first FEDERAL REGISTER issue of each week.

OFFICE OF PERSONNEL MANAGEMENT

5 CFR Part 351

RIN 3206-AE74

Minimum 60 Days Specific RIF Notice

AGENCY: Office of Personnel Management.

ACTION: Final rulemaking.

SUMMARY: The Office of Personnel Management (OPM) is issuing final regulations that require agencies to give all employees and their representatives at least 60 days specific written notice prior to a reduction in force except, with OPM approval, in situations caused by circumstances not reasonably foreseeable. Previously, agencies were required to give employees at least 30 days total advance written notice prior to a reduction in force (RIF) action.

The new regulations also permit agencies to issue RIF notices to employees more than 90 days prior to the reduction in force without the prior approval of OPM. Previously, agencies could not issue reduction in force notices to employees more than 90 days prior to a RIF action without the prior approval of OPM.

Finally, the new regulations clarify that agencies must provide specific placement and unemployment insurance information to employees who have received specific notices of separation by reduction in force. In addition, at the same time that 50 or more employees receive RIF notices of separation, the agency must notify (1) the appropriate State dislocated worker unit, as designated under title III of the Job Training Partnership Act, (2) the chief elected official of the local governmental jurisdiction(s) where the separations will take place, and (3) OPM.

EFFECTIVE DATE: November 5, 1991. Effective with any initial RIF notices issued after November 5, 1991. For initial notices issued on or prior to November 5, 1991, agencies may use either these final regulations or the current regulations in subpart H of 5 CFR part 351 (January 1, 1991, edition).

FOR FURTHER INFORMATION CONTACT: Thomas A. Glennon or Edward P. McHugh, (202) 606-0960 or FTS 266-0960 (FAX 202-606-0390).

SUPPLEMENTARY INFORMATION:

Summary of Comments

On June 17, 1991, OPM published (at 56 FR 27695) proposed regulations to revise portions of 5 CFR part 351 concerning the notices given to employees in a reduction in force. In brief, those regulations proposed changing the minimum 30-day reduction in force notice requirement to 60 days total notice when 50 or more employees in a competitive area received notices of separation by reduction in force, and proposed other related changes.

We received comments from five agencies, one professional organization, one employee union, and one Member of Congress. All except one supported the proposal to give additional written notice to employees of planned reduction in force actions.

Four commenters supported a 60-day specific notice period for all employees affected by a RIF action. Commenters emphasized that 60 days is a more realistic period for surplus employees to benefit from available retraining and outplacement programs, and that many agencies already give employees a 60-day notice. They stressed that a 60-day notice of job loss is an equitable and compassionate practice, which recognizes the serious consequences and readjustments affected employees face. For these reasons, we are adopting the suggestion that employees be given a 60-day specific notice for all RIF actions.

At the same time, we recognize that unusual situations may arise in which agencies are unable to provide a 60-day notice. For these circumstances, the revised regulation permits agencies to request OPM approval of a specific notice period of less than 60 days but no less than 30 days.

One commenter also suggested giving additional flexibility to agencies by dropping the OPM prior approval requirement for RIF notices issued more than 90 days prior to a RIF. Again, we agree with this suggestion and have adopted it in the final regulations. OPM approval is no longer required for a notice period of more than 90 days.

Major Provisions of the Final Regulations

Section 351.801(a) of the final regulations provides that an agency is required to give an employee written notice of the specific RIF action to be taken at least 60 days before its effective date. The practice of using, in combination, a period of general notice followed by a period of specific notice, to satisfy minimum notice periods, is eliminated. Under the new regulations, agencies may continue to give "general" advance notice to employees of an anticipated RIF as part of an effort to inform employees, but such notice will not count towards nor satisfy an employee's right to a 60-day specific notice.

The only exception to the 60-day notice requirement is in the revised § 351.801(b). This provides that, in situations caused by circumstances not reasonably foreseeable, the agency head or designee may request OPM to authorize a notice period of less than 60 days. However, OPM may not under any circumstance authorize a notice period of less than 30 full days. Section 351.801(b) spells out the content of such requests to OPM. Also, the final regulations delete the former 5 CFR 351.801(b), which required OPM approval for a notice period of more than 90 days.

The new § 351.801(a) also requires an agency to notify any bargaining unit representative of RIF actions at the same time it gives RIF notices to employees. This notification requirement does not relieve an agency of any obligation it may have under the Federal Labor Management Relations Statute or an applicable collective bargaining agreement.

The former § 351.802 is deleted, reflecting the elimination of use of general RIF notices.

The present § 351.803(a) is redesignated as § 351.802 and covers the content of a specific RIF notice. The present § 351.803(b), which covers the content of a general RIF notice, is deleted. The specific notice must include the specific personnel action to be taken with respect to the employee involved the effective date, the employee's

ranking, and the factors used to determine the ranking. It also must tell the employee where he or she may inspect the regulations and records, and about appeal and grievance rights, and must provide information on reemployment rights and unemployment compensation. (On May 8, 1991, at 56 FR 21332, OPM proposed to credit performance ratings received during the previous 4 years. This proposal is still under consideration and is not reflected here.)

Present § 351.804 is redesignated as § 351.803 and is revised. Paragraph (a) clarifies that agencies must provide information on the Reemployment Priority List and OPM's Displaced Employee Program to each employee who has received a specific notice of separation by reduction in force. Paragraph (a) also requires agencies to advise these same employees on how to apply for unemployment insurance benefits through their appropriate State government agency.

Paragraph (b) of § 351.803 includes a new requirement for the agency. At the same time it issues RIF separation notices to 50 or more employees in a competitive area, an agency must notify (1) the State dislocated worker unit, as designated or created under title III of the Job Training Partnership Act, (2) the chief elected official of the unit of local government(s) within which the separations will take place, and (3) OPM. The regulation specifies the content of such notices. The purpose of this notice is to facilitate implementation of placement and training efforts to aid dislocated employees.

Former § 351.805 is redesignated as § 351.804. It is revised to eliminate references to general notices since agencies now must use only specific notices.

Former § 351.806 is redesignated as § 351.805 and is revised to provide that an employee is entitled to a new specific written notice of at least 60 full days if the agency decides to take a more severe action than specified in the initial notice given to the employee.

Section 351.807 is redesignated as § 351.806.

E.O. 12291, Federal Regulation

I have determined that this is not a major rule as defined under section 1(b) of E.O. 12291, Federal Regulation.

Regulatory Flexibility Act

I certify that this regulation will not have a significant economic impact on a substantial number of small entities because it only affects Federal employees.

List of Subjects in 5 CFR Part 351

Government employees.

Office of Personnel Management.

Constance Berry Newman,

Director.

Accordingly, OPM is amending part 351 of title 5, Code of Federal Regulations, as follows:

PART 351—REDUCTION IN FORCE

1. The authority citation for part 351 continues to read as follows:

Authority: 5 U.S.C. 1302, 3502, 3503.

2. Subpart H of part 351 is revised to read as follows:

Subpart H—Notice to Employee

Sec.
351.801 Notice period.
351.802 Content of notice.
351.803 Notice of eligibility for reemployment and other placement assistance.
351.804 Expiration of notice.
351.805 New notice required.
351.806 Status during notice period.

Subpart H—Notice to Employee

§ 351.801 Notice period.

(a) Except as provided in paragraph (b) of this section, each competing employee selected for release from a competitive level under this part is entitled to a specific written notice at least 60 full days before the effective date of release. At the same time an agency issues a notice to an employee, it must notify the exclusive representative(s), as defined in 5 U.S.C. 7103(a)(16), of each affected employee at the time of the notice.

(b) When a reduction in force is caused by circumstances not reasonably forseeable, OPM, at the request of an agency head or designee, may authorize a notice period of less than 60 days but at least 30 full days before the effective date of release. An agency request to OPM shall specify:

(1) The reduction in force to which the request pertains;

(2) The number of days by which the agency requests that the period be shortened;

(3) The reasons for the request; and

(4) Any other additional information that OPM may specify in the Federal Personnel Manual.

(c) The notice period begins the day after the employee receives the notice.

(d) When an agency retains an employee under § 351.607 or § 351.608 of this part, the notice to the employee shall cite the date on which the retention period ends as the effective date of the employee's release from the competitive level.

§ 351.802 Content of notice.

The notice shall state specifically: (a) The action to be taken and its effective date;

(b) The employee's competitive area, competitive level, subgroup, service date, and annual performance ratings of record received during the last three years;

(c) The place where the employee may inspect the regulations and records pertinent to this case;

(d) The reasons for retaining a lower-standing employee in the same competitive level under § 351.607 or § 351.608 of this part;

(e) Information on reemployment rights, except as permitted by paragraph 351.803(a) of this part; and

(f) The employee's right, as applicable, to grieve under a negotiated grievance procedure or to appeal to the Merit Systems Protection Board under the provisions of the Board's regulations. The agency shall also comply with § 1201.21 of this title.

§ 351.803 Notice of eligibility for reemployment and other placement assistance.

(a) An employee who receives a specific notice of separation under this part must be given information concerning the right to reemployment consideration under subparts B (Reemployment Priority List) and C (Displaced Employee Program) of part 330 of this chapter. The employee also must be given information concerning how to apply for unemployment insurance through his or her appropriate State program. This information must be provided either in or with the specific reduction in force notice or as a separate supplemental notice to the employee.

(b) When 50 or more employees in a competitive area receive separation notices under this part, the agency must provide notification of the action, at the same time it issues specific notices of separation to employees, to:

(1) The State dislocated worker unit, as designated or created under title III of the Job Training Partnership Act;

(2) The chief elected official of local government(s) within which these separations will occur; and

(3) OPM.

(c) The notice required by paragraph (b) of this section must include:

(1) The number of employees to be separated from the agency by reduction in force (broken down by geographic area or other basis specified by OPM);

(2) The effective date of the separations; and

(3) Any other information specified in the Federal Personnel Manual, including information needs identified from consultation between OPM and the Department of Labor to facilitate delivery of placement and related services.

§ 351.804 Expiration of notice.

A notice expires except when followed by the action specified, or by an action less severe than specified, in the notice or in an amendment made to the notice before the agency takes the action. An agency may not take action before the effective date in the notice. An action taken after the specified date in the notice shall not be ruled invalid for that reason except when it is challenged by a higher-standing employee in the competitive level who is reached out of order for reduction in force as a result of the action.

§ 351.805 New notice required.

An employee is entitled to a new written notice of at least 60 full days if the agency decides to take an action more severe than first specified.

§ 351.806 Status during notice period.

When possible, the agency shall retain the employee on active duty during the notice period. When in an emergency the agency lacks work or funds or for all or part of the notice period, it may place the employee on annual leave with or without his or her consent, on leave without pay with his or her consent, or in a nonpay status without his or her consent.

[FR Doc. 91-21311 Filed 9-5-91; 8:45 am]
BILLING CODE 6325-01-M

OVERSIGHT BOARD

12 CFR Part 1507

Minority and Women Contracting Outreach Program

AGENCY: Oversight Board.

ACTION: Final rule.

SUMMARY: The Oversight Board now issues a final rule establishing in regulatory form an outreach program to maximize the participation of minorities and women, and firms owned by minorities and women, in Oversight Board contracts. The rule is required by provisions of the Financial Institutions Reform, Recovery, and Enforcement Act of 1989 ("FIRREA"). This action should ensure the participation of firms owned or controlled by minorities and women in Oversight Board contracting and the performance of contracts.

EFFECTIVE DATE: October 7, 1991.

FOR FURTHER INFORMATION CONTACT: Lawrence Hayes, telephone (202) 786-9681.

SUPPLEMENTARY INFORMATION:

Background

The Oversight Board was established as a corporate instrumentality of the United States by section 21A(a) of the Federal Home Loan Bank Act, 12 U.S.C. 1441a(a), added by section 501(a) of FIRREA. The Oversight Board's principal duty is to oversee the Resolution Trust Corporation ("RTC").

Section 1216(c) of FIRREA requires the Oversight Board and other listed agencies, including the RTC, to "prescribe regulations to establish and oversee a minority outreach program within each such agency to ensure inclusion, to the maximum extent possible, of minorities and women, and entities owned by minorities and women, including financial institutions, investment banking firms, underwriters, accountants, and providers of legal services, in all contracts entered into by the agency with such persons or entities, public and private, in order to manage the institutions and their assets for which the agency is responsible or to perform such other functions authorized under any law applicable to such agency."

The Oversight Board established a minority and women outreach program for the Board's contracting on July 13, 1990. The program was cast in regulatory form and published as a proposed rule on June 7, 1991. Comments were requested.

Comments and Response

Two comment letters were received, the first from a non-profit law and policy center and the second from a financial institutions trade organization. Both letters supported the concept of an outreach program for Oversight Board contracting.

The first commenter expressed concern that some components of the program, as set forth in the proposed rule, might lead to the awarding of contracts on a quota basis, noting in particular the provisions of § 1507.6(e), which spoke of the development of "necessary contract provisions to ensure inclusion, to the maximum extent possible, of minorities and women, and entities owned by minorities and women, in the performance of all Oversight Board contracts." The first commenter argued that to "ensure" that minority and women owned firms receive Oversight Board contracts is neither desirable nor constitutionally permissible, mentioning possible discrimination against small business firms not owned by minorities or women and possibly increased costs.

The second commenter criticized the rule generally for lack of detail concerning the implementation of the program. Specific recommendations were: (1) In evaluating effectiveness, minority contractors and women contractors should be considered separately; (2) in promoting the program to firms not owned or controlled by minorities or women, such firms should be encouraged to "work jointly" with minority or women controlled firms in bidding on contracts; and (3) the program should be evaluated quarterly and quarterly reports made available to the Oversight Board. This commenter concluded by recommending that the Oversight Board encourage the RTC to implement a minority outreach program that would be "similar in structure" to its own.

The provisions of § 1507.6(e) questioned by the first commenter parallel the language of section 1216(c) of FIRREA, which requires the Oversight Board and other agencies to establish a program to "ensure inclusion, to the maximum extent possible," of minorities and women and minority and women controlled firms "in all contracts entered into by the agency." In § 1507.6(e), the proposed rule attempted to make it clear that the requirements of FIRREA extend not only to contracting, but to subcontracting and contract performance by firms contracting with the agency, including those contracting firms that do not qualify as minority or women owned businesses. The Oversight Board believes that the statutory language must be interpreted in a manner consistent with the Constitution; and the Oversight Board's regulations implementing the statutory language should be interpreted in the same way. Accordingly, the Board finds that the proposed rule's language, which parallels section 1216(c) of FIRREA, does not raise constitutional questions. The language of § 1507.6(e) in the final rule, however, has been modified to clarify the purpose of this regulation, which is not to require that all or a specific percentage of Board contracts be awarded to minority or women controlled firms, but to maximize the participation of minorities and women in Board contracts.

The Board does not believe that the outreach program mandated by FIRREA and now established in regulatory form is inconsistent with the economical operation of the agency; and it intends that Board contracting and the program

shall be administered in a cost effective manner.

The second commenter's request for greater detail is not consistent with the essential nature of the rule, which establishes an outreach program and is not intended to specify acquisition and contracting procedures. The Board fully agrees that evaluations of the program's effectiveness should distinguish minority firms from women controlled firms, and the final rule has been modified to provide that this distinction should be observed in reporting the results of the program. The proposed rule is flexible with respect to the monitoring of the program by the members of the Oversight Board, providing for reporting to the Board members on implementation "annually or more frequently." The Board has not changed this provision in the final rule; it retains the authority to work out appropriate monitoring in the light of experience without the necessity of further rulemaking.

A new provision has been added to the final rule, at § 1507.5(c)(3), in response to the second commenter's recommendation that firms not controlled by minorities or women should be encouraged to work jointly with minority or women controlled firms in bidding on Oversight Board contracts. Contracts to be performed jointly by minority or women owned businesses and other firms may be consistent with the program. It must be emphasized that it is not the Board's intention to discourage any potential contractor from seeking to contract with the Board or to discourage joint bids in appropriate circumstances. But whether a particular contract with a joint venture of minority and non-minority firms, for example, should be counted toward the success of the outreach program would depend on the actual extent to which the minority joint venturer participated in the work and the proceeds; and the Board would expect the staff, in reporting on the outreach program, to evaluate realistically the participation of minorities or women in a joint venture contract before treating such a contract as satisfying the goals of the program.

The Board agrees that the RTC outreach contracting program should be guided by the same ultimate principles as those of the Board's program. The RTC's contracting, however, is enormous and widely varied; it cannot be compared with the Board's contracting to service housekeeping functions for an agency of less than fifty employees. Accordingly, the Board will work toward similarity in basic principles rather than in structure.

Final Rule

The final rule includes the following elements: identification of minority and women owned firms capable of providing goods and services to the Oversight Board; certification of identified firms; promotion of the program; guidelines for the solicitation and award of contracts that promote the participation of minority and women owned firms in Oversight Board contracting and the performance of contracts; and the oversight and monitoring of the program.

The provisions of the proposed rule have been substantially retained as a general matter, although several have been shortened and simplified. In response to comments, the rule provides for separate reporting of minority and women controlled businesses in evaluating the results of the program. The final rule has also been clarified with respect to maximizing the participation of minorities and women in the performance of contracts, whether or not awarded to minority or women controlled firms. Some provisions in § 1507.6 of the proposed rule concerning internal educational efforts have been transferred to § 1507.7 of the final rule (on oversight and monitoring) as a more appropriate location.

The Oversight Board's outreach program applies only to the contracting activities of the Board and does not apply to the contracting activities of the RTC, which is required by section 1216(c) of FIRREA to establish and oversee its own separate minority and women outreach contracting program.

Board Contracts

The Oversight Board's contracting is typically for the acquisition of goods and services for its housekeeping functions, such as contracts for the purchase of office supplies and the maintenance of office equipment. Oversight Board contracts are normally small in cost, typically less than $25,000, and from the enactment of FIRREA through June 30, 1991, the Oversight Board has contracted for the expenditure of approximately $2.2 million, excluding expenditures for travel, space, utilities, and reimbursement of other agencies.

Executive Order 12291

This rule concerns the obtaining of services for agency management and housekeeping purposes and is not a regulation or rule for the purposes of Executive Order 12291. The regulation has no significant effect beyond the internal operating procedures of the Board. The Director, Office of Management and Budget, by memorandum dated December 14, 1984, specified certain types of regulations that were withdrawn from the exemption of procurement regulations from Executive Order 12291. This rule does not fall within such specified types.

Regulatory Flexibility Act

Although the Oversight Board solicited public comments, the Board is not required by section 553 of Title 5, United States Code, or any other law to publish a general notice of proposed rulemaking for this rule, and the Oversight Board is not required to prepare a regulatory flexibility analysis pursuant to the Regulatory Flexibility Act (5 U.S.C. 601 *et seq.*)

List of Subjects in 12 CFR Part 1507

Government contracts, Minority businesses, Women.

For the reasons set forth in the preamble, Chapter XV of Title 12 of the Code of Federal Regulations is amended by adding new part 1507 to Subchapter A to read as follows:

PART 1507—MINORITY AND WOMEN CONTRACTING OUTREACH PROGRAM

Sec.
1507.1 Purpose and scope.
1507.2 Definitions.
1507.3 Organizational responsibilities and staffing.
1507.4 Program components.
1507.5 Promotion.
1507.6 Solicitation and contract award guidelines.
1507.7 Oversight and monitoring.

Authority: 12 U.S.C. 1441a(a)(13); 12 U.S.C. 1833e.

§ 1507.1 Purpose and scope.

(a) Pursuant to the Financial Institutions Reform, Recovery, and Enforcement Act of 1989, Public Law 101–73, sec. 1216(c), 103 Stat. 183, 529 (12 U.S.C. 1833e) this part establishes a minority outreach program to ensure inclusion, to the maximum extent possible, of minorities and women, and entities owned by minorities and women, in all contracts entered into by the Board.

(b) The outreach program established by this part applies only to the contracting activities of the Board. The Board and the Resolution Trust Corporation are separate and distinct entities with different legal characteristics, contracting needs, and programs to perform their respective missions. Accordingly, this program does not apply to the Resolution Trust Corporation.

§ 1507.2 Definitions.

For the purposes of this part:

(a) *Board* means the Oversight Board.

(b) *Minority* means any Black American, Native American, Hispanic American, or Asian American.

(c) *Minority/women owned business* or *M/WOB* or *M/WOB firm* means a firm that is at least fifty-one percent (51%) owned and controlled by one or more minority persons and/or women. If the firm is a publicly owned company, minority persons and/or women must own and control at least fifty-one percent (51%) of the firm's voting stock, and the management and daily business operations of the firm must be controlled by one or more minority persons or women.

(d) *Other firm* means a firm that is not a minority/women owned business.

§ 1507.3 Organizational responsibilities and staffing.

The President of the Board shall appoint an Outreach Director, who shall be a full time officer or employee of the Board performing other duties for the Board (including a contracting officer), to establish and implement the program.

§ 1507.4 Program components.

(a) *Identification.* The first component of the program is identifying M/WOB companies capable of providing goods and services to the Board. Because of the limited nature of the Board's contracting, this activity will be limited to the Washington, DC, area. The Board's staff shall:

(1) Obtain lists and directories of M/WOB firms maintained by other governmental agencies and instrumentalities;

(2) Participate in conventions, seminars, and professional meetings attended by M/WOB firms in order to explain Board contracting opportunities and obtain names of potential M/WOB contractors; and

(3) Publicize the Board's desire to obtain names of potential M/WOB firms for contracting in newspapers, trade journals, and other communications media specifically directed to M/WOB firms.

(b) *Solicitation.* An M/WOB firm identified by the staff as a potential contractor will be included in all Board education and information efforts concerning contracting opportunities and in a Board contracting database. The database will be used by the Board's staff to identify firms to be solicited for Board procurements.

(c) *Certification.* A firm tentatively identified as a minority/women owned business must be certified as meeting the defining standards in § 1507.2(c). To preserve the integrity and foster the objectives of the program, the Board must be satisfied that the defining standards of ownership and control are fulfilled by a tentatively identified firm. The Board's staff shall:

(1) Develop certification procedures, including procedures for certifying M/WOB firms that have previously certified their status to other government agencies and instrumentalities under criteria equivalent to the criteria under this program;

(2) If necessary, and subject to compliance with applicable requirements of law, request documentation from M/WOB firms for submission to the Board; and

(3) Review certification documents to assure that firms satisfy the definitions of § 1507.2(c).

§ 1507.5 Promotion.

(a) The promotion of the outreach program will include the following Board staff activities:

(1) Ongoing promotion of the outreach program within the minority/women owned business community; and

(2) Ongoing promotion of the outreach program to other firms to make such firms aware of the Board's outreach program.

(b) The ongoing promotion of this program within the M/WOB community is necessary to assure awareness of the outreach program by all potential M/WOB contractors, including newly formed M/WOB firms, and encourage their participation. The Board's contracting staff shall:

(1) Develop a promotional campaign to inform the M/WOB community of the Board's contracting needs and its commitment to involving M/WOB firms in Board contracting;

(2) Participate regularly in conferences attended by M/WOB firms to promote Oversight Board contracting opportunities;

(3) Cooperate with local agencies devoted to the promotion of minority/women owned businesses to promote Board contracting opportunities;

(4) Assist M/WOB firms in understanding and complying with the Board's contracting requirements;

(5) Assist M/WOB firms in understanding the Board's contracting needs; and

(6) Take measures to ensure that all Board staff are knowledgeable about and promote this program.

(c) Promotion of the Board outreach program to other firms interested in contracting with the Board is necessary to make such other firms aware that, under the outreach program, the Board will also ensure inclusion, to the maximum extent possible, of minorities and women, and entities owned by minorities and women, in the performance of all Board contracts, including contracts with other firms. All firms should be informed that Board contract provisions will require the inclusion, to the maximum extent possible, of minorities and women, and entities owned by minorities and women, in contract performance. The Board's contracting staff shall:

(1) Develop a promotional campaign to inform M/WOB and other firms interested in contracting with the Board of the Board's policy to ensure inclusion, to the maximum extent possible, of minorities and women, and entities owned by minorities and women, in the performance and subcontracting of all Board contracts;

(2) Assist other firms in understanding and complying with Board contracting requirements respecting the inclusion of minorities and women and entities owned by minorities and women, to the maximum extent possible, in contract performance and subcontracting;

(3) Encourage other firms to work jointly with M/WOB firms for the purpose of contracting with the Board; and

(4) Take measures to ensure that all Board staff are knowledgeable about this aspect of the program.

§ 1507.6 Solicitation and contract award guidelines.

Board contracting shall maximize the award of contracts to M/WOB firms and other firms that provide opportunities, to the maximum extent possible, for the inclusion of minorities and women and entities owned by minorities and women in the performance of Board contracts. The Board's staff shall formulate and implement guidelines directed to this objective which shall include:

(a) Consideration of the capabilities of M/WOB firms, including, but not limited to, determination of delivery schedules and the timing of offers that may facilitate offers from M/WOB firms;

(b) Inclusion of M/WOB firms in the Board's contracting database, which will identify eligible firms in each service category;

(c) Solicitation for a contract of as many bids or quotes from M/WOB firms in the database as is feasible under the circumstances; the contracting officer shall also solicit offers from other firms but for any contract for which the contracting officer does not solicit bids

from M/WOB firms, the contracting officer must document the reasons therefor;

(d) Placing notices of Board contracting in newspapers and communications media directed to M/WOB firms, where feasible, when solicitations are publicly advertised; and

(e) Development of standard contract provisions to ensure inclusion, to the maximum extent possible, of minorities and women, and entities owned by minorities and women, in the performance and subcontracting of all Board contracts.

§ 1507.7 Oversight and monitoring.

(a) The Board recognizes that the success of this program involves commitment and leadership by senior management and by the staff. The Board pledges the continuing involvement of the Board's staff, at all levels, to make this program a success.

(b) The President of the Board shall establish an internal education program concerning the outreach program and the Board's commitment to the program.

(c) The President of the Board shall develop and implement such additional procedures as may facilitate reaching the goals of the outreach program.

(d) The Board's contracting staff shall report the results of the program to the Outreach Director on a periodic basis. Such reports shall include:

(1) The number of M/WOB firms that have participated in the contracting process, reporting separately minority owned or controlled firms and women owned or controlled firms;

(2) The number of contracts awarded to M/WOB firms, reporting separately awards to minority owned or controlled firms and to women owned or controlled firms; and

(3) Data concerning the inclusion of minorities and women, and entities owned by minorities and women, in the performance and subcontracting of contracts with M/WOB and other firms.

(e) The Outreach Director shall report to the President and the General Counsel of the Board on the implementation of the program. The President and the General Counsel of the Board, in turn, shall report to the members of the Board, annually or more frequently, on the implementation of the program.

Peter Monroe,

President.

[FR Doc. 91-21330 Filed 9-5-91; 8:45 am]

BILLING CODE 2222-01-M

DEPARTMENT OF TRANSPORTATION

Research and Special Programs Administration

14 CFR Part 221

[OST Docket No. 41034; Amdt. 221-69]

RIN 2105-AA39

Airline Time and Mileage Guide

AGENCY: Research and Special Programs Administration.

ACTION: Final rule.

SUMMARY: This final rule removes the tariff regulations that prohibit statements of fares or rates based upon units of distance or time. These provisions applied only to charter tariffs, which have not been required to be filed since September 6, 1979. The change was proposed in order to remove superfluous regulation.

DATES: This regulation is effective October 7, 1991.

FOR FURTHER INFORMATION CONTACT: Donald W. Bright, Director, Office of Automated Tariffs, DAT-1, Research and Special Programs Administration, Department of Transportation, 400 7th Street, SW., Washington, DC 20590, (202) 366-2414.

SUPPLEMENTARY INFORMATION:

Background

By notice of proposed rulemaking issued October 27, 1982 (47 FR 47599) (NPRM), the Civil Aeronautics Board tentatively concluded that the regulations which prohibited air carriers from filing tariffs which contained statements of fares or rates based upon units of distance or time were unnecessary. The Board noted that the regulations applied only to charter tariffs, which were not required to be filed after September 6, 1979. The regulation, therefore, appeared to serve no useful purpose.

The Board also stated that under the proposal, carriers would, in most cases, be permitted to file tariffs that state fares or rates by any reasonable methods. The comment period on the NPRM closed on December 12, 1982.

Comments

Comments on the proposed rulemaking were received from Transamerica Airlines, Inc. (Transamerica). Transamerica stated that it had no objection to the adoption of the rulemaking, provided that the removal of the regulation would not present a barrier to its reintroduction if the Board required charter tariffs to be filed in the future.

In view of the elapsed time since the rulemaking, we issued a supplemental notice of proposed rulemaking (54 FR 41989, October 13, 1989) requesting whether there was any additional information that we should consider before finalizing this rulemaking.

Disposition of Rulemaking

We received no comments to our supplemental notice of proposed rulemaking. The initial reasons for removing the outdated tariff requirements are still valid. Accordingly, we have decided to make the rule final.

Executive Order 12291, Regulatory Flexibility Act, Paperwork Reduction Act, and Federalism Assessment

The Department certifies that this rule is not a major rule as defined by Executive Order 12291. It would not result in an annual effect on the economy of $100 million or more. There would be no increase in production costs or prices for consumers, individual industries, Federal, State, or local governments, agencies, or geographical regions. Furthermore, it would not adversely affect competition, employment, investment, productivity, innovation, or the ability of United States-based enterprises to compete with foreign-based enterprises in domestic or export markets. Similarly, the final rule is not significant under the Department's regulatory policies and procedures. Furthermore, no regulatory evaluation is necessary because the economic impact of the rule is minimal. I certify that this rule will not have a significant economic impact on a substantial number of small entities. This rule has been analyzed in accordance with the principles and criteria contained in Executive Order 12612, and it has been determined that the concepts discussed therein do not have sufficient federalism implications to warrant the preparation of a federalism assessment.

With respect to the Paperwork Reduction Act of 1980, Public Law 96-511, this rule contains no new information collection requirements that require the approval of the Office of Management and Budget pursuant to the Act.

List of Subjects in 14 CFR Part 221

Air fares and rates; Freight; Reporting and recordkeeping requirements.

This rule is being issued under the authority delegated to the Assistant Secretary for Policy and International Affairs and the Administrator, Research and Special Programs Administration contained in 49 CFR 1.56 (j)(2)(ii). For

the reasons set forth herein, 14 CFR part 221 is amended as follows:

PART 221—TARIFFS

1. The authority citation for part 221 continues to read as follows:

Authority: Secs. 102, 204, 401, 402, 403, 404, 411, 416, 1001, 1002, Public Law 85–726, as amended, 72 Stat. 740, 743, 754, 757, 758, 760, 769, 771, 788; 49 U.S.C. 1302, 1324, 1371, 1372, 1373, 1374, 1381, 1386, 1461, 1482.

§ 221.52 [Amended]

2. Section 221.52 is amended by removing paragraph (c) and paragraph (d) is redesignated as paragraph (c).

§ 221.54 [Removed and reserved]

3. Section 221.54 is removed and reserved.

§ 221.55 [Removed and reserved]

4. Section 221.55 is removed and reserved.

§ 221.106 [Removed and reserved]

5. Section 221.106 is removed and reserved.

Issued in Washington, DC, under authority delegated under 49 CFR 1.56 (j)(2)(ii), on July 31, 1991.

Dated: July 31, 1991.

Travis P. Dungan,

Administrator, Research and Special Programs Administration.

[FR Doc. 91–21320 Filed 9–5–91; 8:45 am]

BILLING CODE 4910–62–M

DEPARTMENT OF DEFENSE

Office of the Secretary

32 CFR Part 199

[DoD 6010.8–R]

Civilian Health and Medical Program of the Uniformed Services (CHAMPUS); Reimbursement of Individual Health Providers

AGENCY: Office of the Secretary, DoD.

ACTION: Final rule.

SUMMARY: This final rule implements the provisions of the Defense Appropriations Act for Fiscal Year 1991, Public Law 101–511, section 8012, which limits increases in maximum allowable payments to physicians and other individual health care providers and authorizes reductions in such amounts for overpriced procedures.

DATES: This rule will be effective for services provided on or after January 1, 1992. However, section 199.14(g)(1)(v) is effective for services provided on or after October 7, 1991.

ADDRESSES: Office of the Civilian Health and Medical Program of the Uniformed Services (OCHAMPUS), Office of Program Development, Aurora, CO 80045–6900. For copies of the **Federal Register** containing this final rule, contact the Superintendent of Documents, U.S. Government Printing Office, Washington, DC 20402, (202) 783–3238.

The charge for the **Federal Register** is $1.50 for each issue payable by check or money order to the Superintendent of Documents.

FOR FURTHER INFORMATION CONTACT: Steve Lillie, Office of the Assistant Secretary of Defense (Health Affairs), telephone (703) 695–3350.

Questions regarding payment of specific claims under the CHAMPUS allowable charge method should be addressed to the appropriate CHAMPUS contractor.

SUPPLEMENTARY INFORMATION:

A. Congressional Action

The Fiscal Year 1991 Department of Defense Appropriations Act, Public Law 101–511, that was signed on November 5, 1990, included the following provision as section 8012:

> None of the funds contained in this Act available for the Civilian Health and Medical Program of the Uniformed Services shall be available for payments to physicians and other authorized individual health care providers in excess of the amounts allowed in fiscal year 1990 for similar services, except that: (a) For services for which the Secretary of Defense determines an increase is justified by economic circumstances, the allowable amounts may be increased in accordance with appropriate economic index data similar to that used pursuant to title XVIII of the Social Security Act; and (b) for services the Secretary determines are overpriced based on an analysis similar to that used pursuant to title XVIII of the Social Security Act, the allowable amounts shall be reduced by not more than 15 percent. The Secretary shall solicit public comment prior to promulgating regulations to implement this section.

As a consequence of this provision, DoD deferred the 1991 prevailing charge updates, normally scheduled for January 1. This was necessary in order to comply with the prohibition on increasing 1990 prevailing charges prior to the promulgation of regulations to implement the statutory constraints. More broadly, this section provides an excellent opportunity to increase the fairness of the CHAMPUS allowable charge reimbursement method, by increasing or reducing prevailing charge limitations based on analyses similar to those conducted by and for the Health Care Financing Administration in preparing to replace the Medicare reasonable charge payment mechanism with a Resource-Based Relative Value Scale (RBRVS) fee schedule beginning January 1, 1992. We are not at this time adopting the RBRVS fee schedule as the basis for reimbursement of professional providers in CHAMPUS; rather, we are making adjustments in prevailing charge levels in the CHAMPUS allowable charge system.

B. Background

Historically, CHAMPUS and Medicare have used similar approaches to determine allowable payment levels. Pursuant to 10 U.S.C. 1079(h), CHAMPUS uses an "allowable charge" method, paying the lesser of the actual billed charge or the 80th percentile of billed charges for the same service in the same locality (State) in the previous year. Medicare pays on the basis of "reasonable charges," the least of the billed charge, the 75th percentile of charges in the same locality (the "prevailing charge"), or the physician's usual charge for the service (the "customary charge"). Substantial differences in payment levels between the programs have arisen because the Medicare Economic Index (MEI) has been in place as a limit on growth in Medicare prevailing charges since 1972.

In February 1989, pursuant to Congressional direction, CHAMPUS took an initial step towards controlling increases in CHAMPUS prevailing charges by implementing the MEI as a limit on growth in most prevailing charges. The MEI, promulgated annually by a notice in the **Federal Register** or in some cases mandated by Congress, represents changes in physician office practice costs and general wage levels. In 1989, the MEI was 3 percent for primary care services and 1 percent for all other services. In 1990, the MEI was 4.2 percent for primary care, 0.0 percent for radiology, anesthesiology and certain other services, and 2.0 percent for other services.

In the past decade a variety of measures to control the rise in professional service costs, such as additional limits on fee increases, programs to increase assignments rates, and limits on balance billing by providers have been added to the Medicare statute. In response to continued rapid escalation in Medicare costs, Medicare is in the process of implementing a major change to its reimbursement approach, replacing its reasonable charge payment mechanism with a resource-based relative value scale (RBRVS) fee schedule beginning January 1, 1992. Congressional direction for this change was in the Omnibus Budget Reconciliation Act of 1989 (Pub.

L. 101–239, section 6102(a)), which enacted 42 U.S.C. 1395w–4.

CHAMPUS allowable charge levels for professional services currently average about 43 percent above Medicare's. CHAMPUS payments for professional services will be over $1.5 billion in fiscal year 1991, and are one of the fastest growing components of the spiraling CHAMPUS budget. There are several problems with the allowable charge approach used by CHAMPUS to reimburse professional services today. First, it is inflationary, in the sense that current allowable payment levels are driven by the prices set by physicians and other providers. The imposition of the MEI as a limit on growth would gradually ameliorate this over a number of years. However, this would give rise to another problem: The prevailing charge limit eventually would become a de facto fee schedule, and rather than being based on the relative value or cost of providing services, the reimbursement would be based on the historical relative prices of services. Finally, because prevailing charge limits are established on a statewide basis, CHAMPUS pays more than appropriate in low-cost areas and perhaps less than desirable in high-cost areas.

C. Medicare's Physician Payment Reform

The 1989 Omnibus Budget Reconciliation Act changes to the Medicare payment approach include three elements: adoption of a Medicare fee schedule using a resource-based relative value scale (RBRVS); imposition of Medicare volume performance standards (MVPS); and, new limits on billed charges that may be levied on Medicare patients.

The fee schedule arose from work on resource-based relative value scales conducted by Dr. William Hsiao of Harvard and the Physician Payment Review Commission. The fee schedule based on this research is intended to rationalize payments for professional services by basing them on the resources required rather than on the historical prices charged by providers. In a nutshell, this research has identified some services (chiefly cognitive services) as undervalued in relation to other services, and some (chiefly surgical procedures) as overvalued.

Under the Medicare fee schedule, to be implemented beginning January 1, 1992, each service will be reimbursed based on its value, which is defined as the sum of relative value units representing physician work, practice expenses net of malpractice expenses (overhead), and the cost of professional liability insurance (malpractice). Nationally uniform relative values will be adjusted for each locality according to published geographic practice cost indices. A conversion factor will be used to convert total relative value units into dollar payment levels. The conversion factor will be budget neutral, that is, it will be calculated so that had the fee schedule applied during 1991 the same level of aggregate payments would result as under the reasonable charge system.

The Medicare statute also establishes volume performance standard rates of increase for Medicare physician expenditures. Acceptable rates of increase are established annually; if expenditures exceed the established standard, then the amount of the annual update in the fee schedule conversion factor for a subsequent year may be reduced. Additionally, beneficiary financial protection from balance billing (charges in excess of the amounts which providers may seek to collect from the patient) is enhanced.

As a first step towards implementing the Medicare fee schedule, Congress dictated reductions in payments for certain procedures that had been identified as overvalued by at least 10 percent based on a comparison of payment amounts under a resource-based relative value scale and the existing national average prevailing charge for 1989. Reductions of up to 15 percent were implemented on April 1, 1990, for 245 such procedures, and additional reductions for these and other overvalued procedures are being implemented in 1991.

D. Proposed Rule

On April 5, 1991, we issued for public comment a proposed rule to implement the referenced provision of the Defense Appropriations Act. We received only six comments, each from an association representing a particular group of health care providers and each expressing disagreement or reservations regarding certain provisions of the proposed rule. These comments did lead us to make one substantive revision to the proposed rule. Specific comments, including those to which the substantive change relates, are discussed in the next section.

E. Provisions of Final Rule

The Appropriations Act authority to reduce CHAMPUS prevailing charges based on an analysis similar to Medicare's provides the opportunity to move in the same direction as Medicare—away from inflationary, maldistributed payments, and toward a more rational, fair, and cost-effective payment system.

One important opportunity provided by the approach being taken by Medicare is for CHAMPUS to develop prevailing charge levels on a local area basis rather than on a state-by-state basis.

Under the current CHAMPUS approach, each CHAMPUS Fiscal Intermediary develops, for each of the states it serves, a profile of base period charges for each service in order to determine the 80th percentile charge. Because there are more than 7,000 different procedures for which this must be done, profile development is a complex process, and often there are insufficient data to establish prevailing charges, resulting in imputed values for many services. We intend instead to calculate maximum allowable charge levels on a national basis, and use the Medicare geographic practice cost indices (GPCIs) to adjust the national levels to local economic conditions. Implementation of this approach will not be possible until January 1, 1992, when all the necessary information will be available from Medicare.

More than one commenter suggested that the CHAMPUS approach to developing prevailing charges on a local area basis rather than a state-by-state basis is inconsistent with the Physician Payment Review Commission's recommendation to decrease the total number of Medicare payment localities, and suggested that CHAMPUS should not follow the Medicare approach that may soon be changed. For the reasons indicated above, we believe CHAMPUS should use the local areas that Medicare uses. If Medicare changes their local areas, as may happen, DoD intends to also change so that its local areas match Medicare's.

Also to take effect January 1, 1992, would be the new method proposed for calculating maximum allowable charges. We will reduce prevailing charges by no more than 15 percent for services which are determined to be overpriced in accordance with the analysis described below. We will increase prevailing charge levels by the Medicare Economic Index for primary care services (other than any determined overpriced) as we have defined primary care services in the past. For services that are neither overpriced based on the analysis explained below nor primary care procedures, the prior year prevailing charge levels will be continued.

One commenter thought that CHAMPUS' definition of "primary care" services in the proposed rule should be expanded to match Medicare's definition of primary care. The CHAMPUS definition of primary care

includes all of the codes the Health Care Financing Administration defines as primary care, plus several additions including maternity and delivery services and well baby care. More than one commenter questioned whether the MEI accurately reflects the cost increases for professional services, particularly radiology and anesthesiology. Although we realize that provider groups generally disagree with the MEI update method Congress has used for Medicare for many years and for CHAMPUS since FY–1989, it is the index that Congress has determined to be the appropriate basis for annual updates.

Our analysis for identifying "overpriced procedures" is similar to that conducted by Medicare, as instructed by Congress. For Medicare, the Congress designated as "overvalued procedures" a number of procedures in section 1842(b)(14) of the Social Security Act, as enacted by section 6104 of the Omnibus Budget Reconciliation Act (OBRA) of 1989 (Pub. L. 101–239) and as amended by section 4118(a) of OBRA 1990. Overvalued procedures were identified as those for which the Medicare national average prevailing charge was at least 10 percent above the projected RBRVS payment amount.

We compare CHAMPUS prevailings to Medicare's preliminary relative value units (RVUs), which were published in the **Federal Register** on September 4, 1990 (55 FR 36178). This was done by calculating what CHAMPUS prevailing charges would have been in 1988 on a national basis, and comparing those values to the RVUs published by Medicare.

Our analysis indicates that the overall average ratio of CHAMPUS prevailings to Medicare RVUs was 1.53, when weighted for the frequency of CHAMPUS procedures. In order to determine the relationship of CHAMPUS prevailing charges to Medicare RVUs for various groupings of procedures, we conducted a series of comparisons. As Table 1 shows, the procedures identified in OBRA 1989 as overvalued Medicare procedures are very overpriced for CHAMPUS as well, with an average ratio (CHAMPUS prevailing to Medicare RVU) of 2.31. Procedures identified by OBRA 1990 as overvalued (which we have called "other overvalued" to distinguish them from the OBRA 1989 group), with which we grouped radiology procedures, because they also were singled out in OBRA 1990, have an average ratio of 1.93. For procedures which Medicare has frozen allowable charges for 1991 in accordance with OBRA 1990, the average ratio is 1.55. Procedures defined by CHAMPUS as primary care procedures have an average ratio of 1.37. Finally, pathology procedures, some of which are paid under a separate fee schedule (the Clinical Diagnostic Laboratory Fee Schedule) under Medicare, were the most overpriced in CHAMPUS, with an average ratio of 2.76. In other words, the average pathology procedure would have had a CHAMPUS prevailing level in 1988, 176 percent higher than the proposed Medicare RVU.

This analysis permits us to identify procedures which are overpriced compared to the average relationship of CHAMPUS prevailing charges to Medicare RVUs. Specifically, in this analysis any procedure with a ratio of CHAMPUS prevailing to Medicare RVU of more than 1.53 is overpriced. Accordingly, for any procedure for which the ratio of CHAMPUS prevailing charge to Medicare RVU is greater than 1.5, the prevailing charge will be reduced in accordance with Congressional authority. Because Medicare has not completed development of RVUs for all procedures, we will implement this process in 1992, when all RVU values will be available.

We feel confident that this analysis has produced meaningful results, and provides the basis for appropriate modifications to CHAMPUS prevailing charges. In concert with the shift to national prevailing charges and local economic adjustments described above, these modifications will produce a better balanced and fairer reimbursement system for professional services.

Under the final rule, in order to preserve the effects of the Congressionally-directed application of the Medicare Economic Index in 1989 and 1990, as well as the adjustments to prevailing charges being proposed for 1991, we will calculate for 1992 an "appropriate charge" level for each procedure. The appropriate charge will be based on national billed charge data from the period prior to implementation of the Medicare Economic Index for CHAMPUS, updated to the present by application of the maximum increases permitted by the MEI and the 1991 adjustments to prevailing charges. The appropriate charge will be used in CHAMPUS allowable charge determinations just as the MEI-limited prevailing charge is used at present. This is the system we are establishing effective January 1, 1992.

However, for several reasons, it is inappropriate to implement in 1991 the full reductions in prevailing charges suggested by the analysis we carried out. First, the Medicare data used in the analysis are preliminary, which makes it appropriate for us to exercise caution. Second, the full range of values for Medicare RVUs has not yet been established; a notice of proposed rulemaking for the Medicare Fee Schedule was published in the **Federal Register** on May 31, 1991 containing values for approximately 5,000 procedures. Although the Medicare data we used in our analysis are preliminary, the analysis focused on comparisons in the aggregate, and demonstrated substantial overpricing for some groups of procedures.

Based on these reasons, we will reduce prevailing charges in 1991 by 15 percent for those procedures which have been identified for Medicare as "overvalued" (the OBRA 1989 group) and "other overvalued" (the OBRA 1990 group, including radiology), as well as pathology procedures. In our analysis, these categories had average ratios of CHAMPUS prevailings to Medicare RVUs of 2.37, 1.93, and 2.76 respectively, which suggests that all the procedures in these categories share the attribute of being overpriced.

As shown in Table 1, the average ratio of CHAMPUS prevailing charges to Medicare RVUs for primary care services was below the overall average ratio. Based on this finding, we will increase prevailing charges for primary care by the Medicare Economic Index (2 percent).

We will freeze prevailing charge levels during 1991 at the 1990 level for all other procedures. This action is supported by the Congress' direction to pay at the 1990 level absent a determination that the procedure is overpriced or that an increase is warranted. While the group of procedures to be frozen no doubt includes some which are overpriced, we cannot identify them with confidence until further data are available.

One commenter suggested that procedures cut by 6.5 percent under Medicare should only be cut by 6.5 percent by CHAMPUS, rather than by 15 percent. Another commenter suggested that no reductions in 1991 be made for procedures commonly provided by its specialists, because some procedures might be reduced below the 1.5:1 ratio of CHAMPUS to Medicare, or might be inappropriately reduced owing to the preliminary nature of Medicare values available now. The Appropriations Act indicated that CHAMPUS should conduct an analysis similar to that done by Medicare. Based upon this analysis, CHAMPUS should then increase, freeze, or decrease allowable levels by no more

than 15 percent. The Act did not say that CHAMPUS should follow Medicare's cuts, but rather that CHAMPUS should base its decisions on an analysis similar to that done by Medicare. We think that the methodology described above meets this criteria. The findings are corroborated by the facts that CHAMPUS prevailings for this group of procedures are, on average, nearly double the Medicare RVUs, and the ratio of CHAMPUS prevailings to Medicare RVUs for these procedures is substantially higher than the average for all procedures.

Although we believe this analysis is solid, based on these comments we have decided to build into the process a corrective adjustment for any procedure which, based on the final Medicare RVU level, should not have been considered overpriced. We are doing this as part of the special transition rule for 1992. Because final Medicare RVUs will then be available for all procedures, we will identify any procedure that was classified as overpriced for purposes of the 1991 adjustment (based on the group of procedures of which it is a part) and that, following that adjustment and based on the final Medicare RVUs, is not overpriced for purposes of the 1992 update. In other words, these would be any procedures that were reduced for 1991 and for which the resulting CHAMPUS level is less than 1.5 times the Medicare RVU. For any such procedure, we will restore the reduction before proceeding with the 1992 calculations.

For example, assume a surgical procedure that had a CHAMPUS prevailing level for 1990 of $155; that it was one of the "other Medicare overvalued" procedures identified in Table 1; and that the final Medicare converted RVU for the procedure is $100. Because this procedure was in a group for which CHAMPUS prevailings were nearly double the preliminary Medicare RVUs, the prevailing level for this procedure would have been reduced for the last several months of 1991 (i.e., those after the effective date of this regulation) by 15 percent, resulting in a 1991 level of $132. When we calculate the 1992 appropriate charge levels, the ratio of the CHAMPUS prevailing to Medicare RVU for this procedure will be 1.32. Because this is below the 1.5 level for identifying overpriced procedures, we will restore the reduction for purposes of the remaining calculation. As a result, $155 will be used for the comparison. Because 1.55 is higher than the 1.5 comparison level, this procedure will be considered overpriced and will be reduced by the extent to which it exceed 1.5 times the Medicare RVU (up to a maximum 15 percent reduction), resulting in a final CHAMPUS appropriate charge level of $150 for 1992. Thus, to the extent preliminary Medicare RVU data would have led to a greater reduction than that which could have resulted from final values, the situation will be corrected.

One commenter suggested that the CHAMPUS reductions for overpriced procedures should take into account geographic cost factors and thereby vary the reduction based on local factors. The geographic cost factor issue is really not pertinent for the CHAMPUS methodology. The Medicare rule for the "overpriced" procedures based the percentage cut on the difference between the local prevailing and a locally-adjusted reduced national weighted average prevailing. The CHAMPUS methodology, on the other hand, simply applies a 15 percent cut to the local prevailing charge. There is no national average that needs to be adjusted to the local level for comparison purposes.

More than one commenter argued that CHAMPUS should not proceed to make the changes to allowable fees until additional information from Medicare is available regarding the Medicare relative value units. These commenters thought this was a particular problem because the Medicare values are preliminary. On a related issue, one commenter thought the proposed CHAMPUS methodology failed to reflect the statistical confidence interval surrounding the average ratios of CHAMPUS prevailings to Medicare Relative Value Units. One commenter suggested that new, higher values for pathology services should replace the values used in our analysis.

The CHAMPUS changes to allowable fee levels proposed for January 1, 1992, will be based on the final—not preliminary—Medicare Relative Value Unit values for all procedures. The CHAMPUS changes to allowable fee levels for 1991 are based upon analyses of groups of procedures which have been identified by Medicare as overpriced. The CHAMPUS analysis indicates that a very high percentage of the procedures in these groups of procedures are relatively overpriced under CHAMPUS, as indicated by the high value of the ratio of the CHAMPUS prevailing to the preliminary Medicare RVU. Because such a high percentage of the procedures in these groups are relatively overpriced, we think it appropriate under our direction from Congress to reduce the prevailings for certain groups by 15 percent until January 1, 1992, when the final Medicare values for all procedures can be used. For pathology services, the revised RVU work values do not change the results of our analysis significantly, so we will proceed with the 1991 reductions as proposed. As insurance against the undesirable side-effects mentioned by the commenters, we have made the revision, described above, to correct for any inappropriate reductions based on the preliminary nature of Medicare RVUs now available.

One commenter thought that for purposes of classifying procedures, certain CPT–4 codes should be refined and that perhaps additional CPT–4 codes should be added. The CPT–4 codes published by the American Medical Association provide a widely accepted, consistent nomenclature of procedures and services. If these codes are changed, CHAMPUS will use the revised codes. However, until that time, we think it would be confusing and inappropriate to deviate from the current CPT–4 codes.

One commenter thought that CHAMPUS should separately reimburse non-physician mental health practitioners on the basis of their own fee schedule rather than on the RVUs developed for psychiatric physicians. Under CHAMPUS methods, non-physician practitioners and physicians have separate prevailing charge levels. They will continue to be treated separately under the new regulation.

One commenter expressed concern about the treatment of Certified Registered Nurse Anesthetists. Prevailing charges for all anesthesiology services are being frozen in 1991, because of data limitations which prevent comparison of CHAMPUS prevailings to Medicare RVUs.

One commenter wondered how malpractice costs will be factored into the payment formula. CHAMPUS charges reflect all physician expenses, including those attributable to malpractice costs. These charge levels are used to calculate allowable fee levels. Thus, the allowable fee levels reflect malpractice costs.

More than one of the commenters thought that the proposed changes in reimbursement would adversely affect access to health care for CHAMPUS beneficiaries. One commenter cautioned that we should not assume that Medicare Fee Schedule values are the appropriate reimbursement amounts.

We are attentive to the issue of maintaining access to care; in this instance, several factors make us confident that there will be no substantial adverse effect on access. As

has been described above, CHAMPUS prevailing charge limits are considerably higher than Medicare rates. On the average, CHAMPUS prevailings are 50% higher than the proposed Medicare relative value units. This indicates that modest reductions in prevailing charge levels can be undertaken without affecting access to care. Our prior actions to implement cost constraints, such as the Medicare Economic Index, were met with increased rates of provider participation, rather than the reduced participation which would be expected if providers were not being reimbursed adequately. Also, with full implementation of our proposal in 1992, the adjustment of payment levels to reflect local economic conditions should further increase the acceptability to local providers of our payment levels. In addition, many of the higher-volume CHAMPUS procedures, including all primary care procedures, will have allowable fee levels increased by the MEI. Regarding the appropriateness of Medicare Fee Schedule values, we recognize that the conversion factor established for the Medicare Fee Schedule will affect the prevailing charge levels in Medicare. We do not believe that Medicare values necessarily represent the ideal level of reimbursement for CHAMPUS services, but we do believe that setting up a target relationship of CHAMPUS to Medicare (for 1992, 1.5:1) is an appropriate method for identifying overpriced procedures for CHAMPUS.

Programs to increase provider participation in CHAMPUS also protect beneficiary access by assuring that a willing pool of providers exists. Expanded development of local provider networks under the Coordinated Care Program will add to the impact of the Health Care Finder/Participating Provider programs being implemented across the country at military hospitals. For all of these reasons, we do not believe this rule will negatively impact on beneficiary access to health care.

In addition to the one substantive change described above, we also have made two clarifying revisions to the proposed rule. One is to note that all CHAMPUS charges that have been previously reimbursed on the basis of the allowable charge method are covered by the Appropriations Act provision and, thus, by the new allowable charge method established by this rule. In other words, we interpret the term "physicians and other authorized individual health care providers" used in the Appropriations Act provision as describing the same providers as does the reference in 10 U.S.C. 1079(h)(1) to any "individual health care professional (or other non-institutional health care provider)." Thus, all FY 1990 allowable amounts established under section 1079(h)(1) are frozen by operation of the Appropriations Act provision, unless they fall into one of the other two categories: Overpriced (which are reduced) or primary care (which are increased).

The other clarification we have made is to note that for any procedures covered by the regulation for which comparable relative value unit and CHAMPUS data are unavailable to permit the direct comparison call for in the rule, two outcomes are possible. One is that if other data are available to permit a reasonable approximation of the relative value or price so as to accomplish an appropriate comparison, the alternative data may be used. As an example, Medicare will not have separate RVUs for services provided by clinical psychologists. Medicare pays psychologists at 90 percent of the physician rate for comparable services. For purposes of developing the CHAMPUS appropriate charge levels for services provided by clinical psychologists, we would expect to use 90 percent of the applicable physician RVUs as a reasonable approximation of Medicare relative values of services provided by clinical psychologists. For some procedures, no appropriate substitute for a Medicare RVU may be available. In such cases, when the comparison called for in the statute and regulation cannot reasonably be made because of data and statistical factors, then the affected procedure cannot be considered overpriced. (Thus, it will not be reduced; it will be increased (if it is "primary care") or held constant.)

F. Rulemaking Procedures

This final rule could be considered a major rule under Executive Order 12291 in that it is expected to reduce CHAMPUS payments to the affected categories of providers by more than $100 million in FY 1992. The information set forth below, as well as much of the material in this preamble, constitute our regulatory impact analysis for purposes of Executive Order 12291 and regulatory flexibility analysis for purposes of the Regulatory Flexibility Act. No comments were received addressed to the similar analysis that appeared with the proposed rule.

The economic impact of the proposed rule is to reduce by modest amounts the CHAMPUS allowable payment levels for the particular health care procedures affected, which will serve to moderate the exceptionally rapid rate of growth in CHAMPUS professional payments in recent years. Percentage reductions in CHAMPUS allowable payment amounts for professional providers are limited to avoid drastic impacts on providers. In addition, the fact that CHAMPUS payment levels are substantially higher than Medicare levels indicates that the reductions will not have unreasonable impact on providers. Moreover, the changes contained in this rule are carefully tailored to accomplish clear Congressional policy of applying to CHAMPUS payment methods and analyses that have been successfully used under Medicare.

We do not at this point have specific data that would allow us to quantify economic impacts on particular groups of physicians and other health care providers. We do not, however, believe that this rule would have a significant economic impact on a substantial number of providers. For a provider to experience a significant impact, that provider would have to have a very high volume of CHAMPUS business, all or most of which is for fees considered clearly excessive under this proposed rule. We do not believe this is the case with respect to very many providers. For those few providers for whom this might be the case, the impact is cushioned by the 15 percent limit on any reductions and by the fact that CHAMPUS appropriate charge levels for overpriced procedures will still be maintained at 1.5 times the Medicare relative value unit. Finally in this connection we note that the only impact on physicians and other "small entities" is in connection with payment rates. This rule does not impose new paperwork requirements or other regulatory burdens of the type the Executive Order and the Regulatory Flexibility Act were intended to minimize.

In summary, the modifications to payment levels will increase the equity of the payment system, and will reduce unnecessary Government expenditures without significant adverse impact on any individual.

This is a final rule. It will take full effect for health care services provided on or after January 1, 1992. Calendar year 1991 maximum allowable charges will be revised for services provided on or after October 7, 1991, in accordance with the § 199.14(g)(1)(v) of the rule.

TABLE 1.—RATIO OF CHAMPUS PREVAILING CHARGE TO PROPOSED MEDICARE RVUS[1], BY TYPE OF PROCEDURE

Type of procedure	Average ratio
Pathology	2.76
Medicare overvalued	2.31
Other Medicare overvalued/radiology	1.93
Medicare frozen	1.55
Average CHAMPUS	1.53
CHAMPUS primary care	1.37
Medicare	1.00

[1] CHAMPUS prevailings calculated in a national basis using data on all professional claims processed from October 1, 1987 through January 31, 1988. Calculated for Medicare RVUs published in the September 4, 1990 Federal Register.

List of Subjects in 33 CFR Part 199

Claims, Handicapped, Health insurance, Military personnel.

For the reasons stated in the preamble, 32 CFR part 199 is amended as follows:

PART 199—AMENDED

1. The authority citation for Part 199 is amended to read as follows:

Authority: 10 U.S.C. 1079, 1086, 5 U.S.C. 301.

2. Section 199.14 is amended by revising paragraph (g)(1) as follows:

§ 199.14 Provider reimbursement methods.

* * * * *

(g) * * *

(1) *Allowable charge method.*

(i) *In general.* The allowable charge method is the preferred and primary method for reimbursement of individual health care professionals and other non-institutional health care providers (covered by 10 U.S.C. 1079(h)(1)). The allowable charge for authorized care shall be the lowest of the billed charge, the prevailing charge level or the appropriate charge level.

(ii) *Prevailing charge level.*

(A) Beginning in calendar year 1992, the prevailing charge level shall be calculated on a national basis, then adjusted for localities in accordance with paragraph (g)(1)(iv) of this section.

(B) The national prevailing charge level referred to in paragraph (g)(1)(ii)(A) of this section is the level that does not exceed the amount equivalent to the 80th percentile of billed charges made for similar services during the base period. The 80th percentile of charges shall be determined on the basis of statistical data and methodology acceptable to the Director, OCHAMPUS (or a designee).

(C) For purposes of paragraph (g)(1)(ii)(B) of this section, the base period shall be a period of 12 calendar months and shall be adjusted once a year, unless the Director, OCHAMPUS, determines that a different period for adjustment is appropriate and publishes a notice to that effect in the **Federal Register.**

(iii) *Appropriate charge level.* Beginning in calendar year 1992, the appropriate charge level shall be calculated on a national basis, then adjusted for localities in accordance with paragraph (g)(1)(iv) of this section. The appropriate charge level for each procedure is the product of the following two-step process:

(A) *Step 1: procedures classified.* All procedures are classified into one of three categories, as follows:

(*1*) *Overpriced procedures.* These are the procedures for which the prior year's national appropriate charge level or national prevailing charge level, whichever is less, exceeds the Medicare converted relative value unit (CRVU) by greater than 150 percent. For purposes of the preceding-sentence the CRVU is the Medicare Resource-Based Relative Value Scale relative value unit, converted to a dollar value by using the applicable Medicare conversion factor. For any particular procedure for which comparable CRVU and CHAMPUS data are unavailable, but alternative data are available that the Director, OCHAMPUS (or designee) determines provides a reasonable approximation of relative value or price for purposes of the comparison required by this paragraph, the comparison may be based on such alternative data.

(*2*) *Other procedures.* These are procedures subject to the allowable charge method that are not included in either the overpriced procedures group or the primary care procedures group.

(*3*) *Primary care procedures.* These are primary care procedures, excluding overpriced procedures. The CHAMPUS definition of primary care includes maternity care and delivery services and well baby care services.

(B) *Step 2: calculating appropriate charge levels.* For each year, appropriate charge levels will be calculated by adjusting the prior year's appropriate charge levels as follows:

(*1*) For overpriced procedures, the prior year's appropriate charge level for each procedure shall be reduced by the lesser of: the percentage by which it exceeds 150 percent of the Medicare converted relative value unit or fifteen percent.

(*2*) For other procedures, the prior year's appropriate charge level for each procedure shall be continued.

(*3*) For primary care procedures, the prior year's appropriate charge level shall be adjusted by the Medicare Economic Index (MEI), as the MEI is applied to Medicare prevailing charge levels.

(iv) *Calculating prevailing charge levels and appropriate charge levels for localities.* The national prevailing charge levels determined pursuant to paragraph (g)(1)(ii) of this section and the national appropriate charge levels calculated pursuant to paragraph (g)(1)(iii) of this section will be adjusted for localities using the same (or similar) geographical areas and the same geographic adjustment factors as are used for determining allowable charges under Medicare.

(v) *Special rules for 1991.*

(A) Prevailing charge levels for care provided on or after January 1, 1991, and before the 1992 prevailing charge levels take effect shall be the same as those in effect on December 31, 1990, except that prevailing charge levels for care provided on or after October 7, 1991 shall be those established pursuant to this paragraph (g)(1)(v) of this section.

(B) Appropriate charge levels will be established for each locality for which a prevailing charge level was in effect immediately prior to October 7, 1991. For each procedure, the appropriate charge level shall be the prevailing charge level in effect immediately prior to [insert 30 days from date of publication] adjusted as provided in (g)(1)(v)(B) (*1*) through (*3*) of this section.

(*1*) For each overpriced procedure, the level shall be reduced by fifteen percent. For this purpose, overpriced procedures are the procedures determined by the Physician Payment Review Commission to be overvalued pursuant to the process established under the Medicare program, other procedures considered overvalued in the Medicare program (for which Congress directed reductions in Medicare allowable levels for 1991), radiology procedures and pathology procedures.

(*2*) For each other procedure, the level shall remain unchanged. For this purpose, other procedures are procedures which are not overpriced procedures or primary care procedures.

(*3*) For each primary care procedure, the level shall be adjusted by the MEI, as the MEI is applied to Medicare prevailing charge levels. For this purpose, primary care procedures include maternity care and delivery services and well baby care services.

(vi) *Special transition rule for 1992.*

(A) For purposes of calculating the national appropriate charge levels for 1992, the prior year's appropriate charge level for each service will be considered

to be the level that does not exceed the amount equivalent to the 80th percentile of billed charges made for similar services during the base period of July 1, 1986 to June 30, 1987 (determined as under paragraph (g)(1)(ii)(B) of this section), adjusted to calendar year 1991 based on the adjustments made for maximunm CHAMPUS prevailing charge levels through 1990 and the application of paragraph (g)(1)(v) of this section for 1991.

(B) The adjustment to calendar year 1991 of the product of paragraph (g)(1)(vi)(A) of this section shall be as follows:

(*1*) For procedures other than those described in paragraph (g)(1)(vi)(B)(*2*) of this section, the adjustment to 1991 shall be on the same basis as that provided under paragraph (g)(1)(v) of this section.

(*2*) For any procedure that was considered an overpriced procedure for purposes of the 1991 prevailing charge levels under paragraph (g)(1)(v) of this section for which the resulting 1991 prevailing charge level was less than 150 percent of the Medicare converted relative value unit, the adjustment to 1991 for purposes of the special transition rule for 1992 shall be as if the procedure had been treated under paragraph (g)(1)(v)(B)(*2*) of this section for purposes of the 1991 prevailing charge level.

(vii) *Adjustments and procedural rules.*

(A) The Director, OCHAMPUS may make adjustments to the appropriate charge levels calculated pursuant to paragraphs (g)(1)(iii) and (g)(1)(v) of this section to correct any anomalies resulting from data or statistical factors, significant differences between Medicare-relevant information and CHAMPUS-relevant considerations or other special factors that fairness requires be specially recognized. However, no such adjustment may result in reducing an appropriate charge level.

(B) The Director, OCHAMPUS will issue procedural instructions for administration of the allowable charge method.

(viii) A charge that exceeds the prevailing charge can be determined to be allowable only when unusual circumstances or medical complications justify the higher charge. The allowable charge may not exceed the billed charge under any circumstances.

(ix) The allowable charge for physician assistant services other than assistant-at-surgery may not exceed 85 percent of the allowable charge for a comparable service rendered by a physician performing the service in a similar location. For cases in which the physician assistant and the physician perform component services of a procedure other than assistant-at-surgery (e.g., home, office or hospital visit), the combined allowable charge for the procedure may not exceed the allowable charge for the procedure rendered by a physician alone. The allowable charge for physician assistant services performed as an assistant-at-surgery may not exceed 65 percent of the allowable charge for a physician serving as an assistant surgeon when authorized as CHAMPUS benefits in accordance with the provisions of § 199.4(c)(3)(iii). Physician assistant services must be billed through the employing physician who must be an authorized CHAMPUS provider.

* * * * *

Dated: August 30, 1991.

L.M. Bynum,

Alternate OSD Federal Register Liaison Officer, Department of Defense.

[FR Doc. 91-21308 Filed 9-5-91; 8:45 am]

BILLING CODE 3810-01-M

DEPARTMENT OF DEFENSE

DEPARTMENT OF VETERANS AFFAIRS

38 CFR Part 21

RIN 2900-AE80

Veterans Education; Increase in Rates Payable in the Educational Assistance Test Program

AGENCY: Department of Veterans Affairs and Department of Defense.

ACTION: Final regulations.

SUMMARY: The law provides that rates of subsistence allowance and educational assistance payable under the Educational Assistance Test Program shall be adjusted annually based upon the average actual cost of attendance at public institutions of higher education in the twelve-month period since the rates were last adjusted. After consultation with the Department of Education, the Department of Defense has concluded that these rates should be increased by six percent. The regulations dealing with these rates are adjusted accordingly.

EFFECTIVE DATE: October 1, 1989.

FOR FURTHER INFORMATION CONTACT: June C. Schaeffer (225), Assistant Director for Policy and Program Administration, Education Service, Veterans Benefits Administration, Department of Veterans Affairs, 810 Vermont Avenue, NW., Washington, DC 20420, (202) 233-2092.

SUPPLEMENTARY INFORMATION: On pages 1506 and 1507 of the **Federal Register** of January 15, 1991, there was published a proposed rule to amend 38 CFR part 21 to implement a six-percent increase in subsistence allowance and educational assistance payable under the Educational Assistance Test Program. Interested people were given 30 days to submit comments, suggestions, or objections. The Department of Veterans Affairs (VA) and the Department of Defense received one letter from an official of an educational organization. The official stated that his organization supported equitable changes in the level of entitlements. Since this letter favored the regulatory changes, VA and the Department of Defense are making them final.

The increases in subsistence allowance and educational assistance are retroactively effective on October 1, 1989. Retroactive effect is warranted because these changes are liberalizing, and because they are interpretive rules which implement and construe the meaning of a law. Moreover, there is good cause for a retroactive effective date of October 1, 1989. Such a date facilitates implementation of 10 U.S.C. 2145 which requires annual adjustments in educational assistance.

VA and the Department of Defense have determined that these amended regulations do not contain a major rule as that term is defined by E.O. 12291, entitled Federal Regulation. The regulations will not have a $100 million annual effect on the economy and will not cause a major increase in costs or prices for anyone. They will have no significant adverse effects on competition, employment, investment, productivity, innovation, or on the ability of United States-based enterprises to compete with foreign-based enterprises in domestic or export markets.

The Secretary of Veterans Affairs and the Secretary of Defense have certified that these amended regulations will not have a significant economic impact on a substantial number of small entities as they are defined in the Regulatory Flexibility Act (RFA), 5 U.S.C. 601-612. Pursuant to 5 U.S.C. 605(b), the amended regulations, therefore, are exempt from the initial and final regulatory flexibility analyses requirements of sections 603 and 604.

This certification can be made because the regulations affect only individuals. They will have no significant economic impact on small entities, i.e., small businesses, small private and nonprofit organizations and small governmental jurisdictions.

There is no Catalog of Federal Domestic Assistance number for the program affected by these regulations.

List of Subjects in 38 CFR Part 21

Civil rights, Claims, Education, Grant programs—education, Loan programs—education, Reporting and recordkeeping requirements, Schools, Veterans, Vocational education, Vocational rehabilitation.

Approved: June 27, 1991.

Edward J. Derwinski,

Secretary of Veterans Affairs.

Approved: July 26, 1991.

Nicolai Timenes, Jr.,

Acting Deputy Assistant Secretary (Military Manpower and Personnel Policy).

For the reasons set out in the preamble, 38 CFR part 21, subpart H is amended as set forth below.

PART 21—VOCATIONAL REHABILITATION AND EDUCATION

Subpart H—Educational Assistance Test Program

1. The authority citation for part 21, subpart H continues to read as follows:

Authority: 10 U.S.C. ch. 107; Pub. L. 96–342.

§ 21.5820 [Amended]

2. In § 21.5820(b) introductory text and (b)(1)(ii) (A), (B), and (C) remove the dollar amounts "$1,753", "$194.78", "$97.39", "$6.49", "$3.25", and "$.03" and add, in their place, the dollar amounts "$1,858", "$206.44", "$103.22", "$6.88", "$3.44", "$.04" and "$.02", respectively.

3. In § 21.5820(b)(1)(ii)(C) remove the word "decreased" and add, in its place, the word "increased."

4. In § 21.5820(b)(2)(ii) (A), (B), and (C) remove the dollar amounts "$194.78", "$97.39", "$6.79", "$3.25", and "$.03" and add, in their place the dollar amounts "$206.44", "$103.22", "$6.88", "$3.44", "$.04", "$.02", respectively.

5. In § 21.5820(b)(2)(ii)(C) remove the word "decreased" and add, in its place, the word "increased."

§ 21.5822 [Amended]

6. In § 21.5822(b)(1) (i) and (ii) remove the dollar amounts "$437" and "$218.50" and add, in their place, the dollar amounts "$463" and "$231.50", respectively.

7. In § 21.5822(b)(2) (i) and (ii) remove the dollar amounts "$437" and "$218.50"and add, in their place, the dollar amounts "$463" and "$231.50", respectively.

[FR Doc. 91–21344 Filed 9–5–91; 8:45 am]

BILLING CODE 8320–01–M

FEDERAL MARITIME COMMISSION

46 CFR Part 586

[Docket No. 89–07]

Inquiry Into Laws Regulations and Policies of the Government of Ecuador Affecting Shipping in the United States/Ecuador Trade

AGENCY: Federal Maritime Commission.

ACTION: Fact Finding Investigation; Extension of Time for Fact Finding Officer's Report.

SUMMARY: On June 21, 1991, the Federal Maritime Commission published an order in this proceeding (56 FR 28494) which established a Fact Finding Investigation into current operations in the trade and the waiver process under Government of Ecuador Resolution No. 012/87. The Fact Finding proceeding is being conducted as part of the proceeding in Docket No. 89–07 by a Fact Finding Officer appointed by the Commission pursuant to sections 19(a)(1)(b), (19)(6) and (19)(7) of the Merchant Marine Act of 1920, 46 U.S.C. app. 876(1)(b), (6) and (7). This notice extends the time for the Fact Finding Officer to make the report of findings from September 19, 1991, to December 18, 1991.

DATES: Report of the Fact Finding Officer due on or before December 18, 1991.

FOR FURTHER INFORMATION CONTACT: Carol J. Neustadt, Office of General Counsel, Federal Maritime Commission, 1100 L Street NW., Washington, DC 20573–0001, (202) 523–5740.

By the Commission.

Joseph C. Polking,

Secretary.

[FR Doc. 91–21363 Filed 9–5–91; 8:45 am]

BILLING CODE 6730–01–M

FEDERAL COMMUNICATIONS COMMISSION

47 CFR Part 1

[FCC 91–244]

Character Qualifications

AGENCY: Federal Communications Commission.

ACTION: Final rule; suspension.

SUMMARY: The Commission's Order suspends the broadcast character reporting requirements imposed in this proceeding. Policy Statement and Order, 55 FR 23082 (1990), reconsideration granted in part, 56 FR 25633 (1991). Three petitioners for a stay of the reporting requirements allege that the requirements impose a significant burden on them, and that failure to fulfill their reporting obligations would place a station's authorization in jeopardy. By suspending the requirements, the Commission, in part, grants the relief requested in the stay petitions and temporarily relieves possibly unwarranted reporting burdens while it expeditiously considers matters raised in the petition for further reconsideration in this proceeding.

EFFECTIVE DATE: August 1, 1991.

FOR FURTHER INFORMATION CONTACT: Martin Blumenthal, Office of General Counsel, Federal Communications Commission, (202) 254–6530.

SUPPLEMENTARY INFORMATION: This is the Commission's Order, adopted July 31, FCC 91–244, and released August 1, 1991, as modified by an *Errata,* adopted August 16, 1991, and released August 1, 1991.

Title: Policy Regarding Character Qualifications in Broadcast Licensing; Amendment of Part 1, the Rules of Practice and Procedure, Relating to Written Responses to Commission Inquiries and the Making of Misrepresentations to the Commission by Applicants, Permittees, and Licensees, and the Reporting of Information Regarding Character Qualifications (Order)

Summary of Order

1. The Commission herein suspends the broadcast character reporting requirements imposed in this proceeding. See Policy Statement and Order (the 1990 Character Policy Statement), 5 FCC Rcd 3252, 55 FR 23082 (1990), reconsideration granted in part, 6 FCC Rcd 3448, 56 FR 25633 (1991) (the 1991 Character Reconsideration Order). Petitions for a stay of these reporting requirements were filed by: the National Broadcasting Company, Inc.; Cox Enterprises, Inc., Cosmos Broadcasting Corporation, and A.H. Belo Corporation; and Capital Cities/ABC, Inc. and the Times Mirror Company.[1]

2. The petitioners request a stay, pending reconsideration,[2] of those

[1] Supporting pleadings were filed by: Great American Television and Radio Company, Inc.; McGraw-Hill Broadcasting Company, Inc.; The New York Times Company and Renaissance Communications Corporation; and Paramount Communications, Inc.

[2] In addition to petitions for reconsideration filed by the stay petitioners and their supporters, three other petitions for reconsideration were filed.

broadcast character reporting obligations that require: (1) Licensees to report adjudications of relevant misconduct within 90 days of learning of such adjudications; (2) renewal applicants, assignors and transferors to report in their applications pending litigation regarding relevant misconduct; (3) new applicants, assignees and transferees to report in their applications pending litigation regarding relevant misconduct; and (4) licensees and applicants to provide litigation-related information regarding any entities in which persons holding attributable interests in the licensee or applicant also hold an attributable interest.[3]

Petitioners allege that these reporting requirements impose a significant burden on them, and that failure to fulfill their reporting obligations could place a station's authorization in jeopardy.

3. Although petitioners' showing does not necessitate a stay, see *Washington Metropolitan Area Transit Commission* v. *Holiday Tours, Inc.*, 559 F.2d 841 (D.C. Cir. 1977), and a stay would be procedurally inappropriate because these reporting requirements have been in effect for over a year, in our discretion we have decided to grant partial relief by suspending the reporting requirements imposed in this proceeding. While we continue to believe that the 1990 Character Policy Statement and the 1991 Character Reconsideration Order reasonably identified those matters relevant to broadcast licensing proceedings, and we remain vigorously committed to enforcement of those policies, it was not our intent to impose unwarranted reporting burdens on licensees and applicants. In this regard, petitioners have raised questions as to whether the significance of some of the matters required to be reported is sufficient to justify the burden involved in preparing the reports.

4. In these circumstances, we will suspend the requirements that licensees report final adjudications of relevant misconduct within 90 days of such adjudications and that renewal, assignment and transfer applications include reports of pending litigation involving the renewal applicant or the assignor or transferor. These requirements were first imposed in the 1990 Character Policy Statement and the 1991 Character Reconsideration Order.

5. In contrast, the requirement that new applicants and assignees or transferees report relevant pending litigation, including litigation involving all entities in which persons with an attributable interest, in the applicant or licensee also hold an attributable interest were not imposed or modified in either the 1990 Character Policy Statement or the 1991 Character Reconsideration Order. As these requirements predate our actions in this proceeding, we see no reason to suspend their continued effectiveness.

6. Finally, it is our firm intention to resolve the matters raised in the petitions for further reconsideration in this proceeding as expeditiously as possible. Thus, although the suspension of the reporting requirements granted herein will remain in place until the Commission has resolved those matters, we do not expect that this action will create a prolonged hiatus in the reporting requirements, and as noted above (*see* ¶3), this action should not be viewed as an intent by the Commission to weaken its commitment to strong broadcast character policies.

7. Accordingly, *it is ordered* that the Petitions for Stay filed by the National Broadcasting Company, Inc.; Cox Enterprises, Inc., Cosmos Broadcasting Corporation, and A.H. Belo Corporation; and Capital Cities/ABC, Inc. and the Times Mirror Company *are denied.*

8. *It is further ordered,* the requirements that licensees report final adjudications of relevant misconduct within 90 days of such adjudications and that renewal, assignment and transfer applications include reports of pending litigation involving the renewal applicant or the assignor or transferor *are suspended.*

9. The action herein is taken pursuant to section 4(i), 303(r), 308(b), 312, and 319(a) of the Communications Act of 1934, as amended.

List of Subjects in 47 CFR Part 1

Administrative practice and procedure, Radio.

Federal Communications Commission.

Donna R. Searcy,

Secretary.

Rule Change

Part 1 of Title 47 of the CFR is amended as followed:

1. The authority citation for part 1 continues to read as follows:

Authority: Secs. 4,. 303, 48 Stat. 1066, 1082, as amended; 47 U.S.C. 154, 303; Implement, 5 U.S.C. 552, unless otherwise noted.

§ 1.65 [Amended.]

2. Section 1.65 is amended by suspending paragraph (c).

[FR Doc. 91-21405 Filed 9-5-91; 8:45 am]

BILLING CODE 6712-01-M

---

47 CFR Part 73

[MM Docket No. 89-331; RM-6737]

Radio Broadcasting Services; Bartonville, IL

AGENCY: Federal Communications Commission.

ACTION: Final rule.

SUMMARY: This document allots Channel 260A to Bartonville, Illinois, at the request of Willis Jordan. See 54 FR 32672, August 9, 1989. Channel 260A can be allotted to Bartonville in compliance with the Commission's minimum distance separation requirements with a site restriction of 9.6 kilometers (5.9 miles) north of the community. The coordinates are North Latitude 40°44'20" and West Longitude 89°40'00". With this action, this proceeding is terminated.

DATES: Effective October 15, 1991; the window period for filing applications will open on October 16, 1991, and close on November 15, 1991.

FOR FURTHER INFORMATION CONTACT: Nancy J. Walls, Mass Media Bureau, (202) 634-6530.

SUPPLEMENTARY INFORMATION: This is a synopsis of the Commission's Report and Order, MM Docket No. 89-331, adopted August 16, 1991, and released August 30, 1991. The full text of this Commission decision is available for inspection and copying during normal business hours in the FCC Dockets Branch (room 230), 1919 M Street, NW., Washington, DC. The complete text of this decision may also be purchased from the Commission's copy contractors, Downtown Copy Center (202) 452-1422, 1714 21st Street, NW., Washington, DC 20036.

List of Subjects in 47 CFR Part 73

Radio broadcasting.

PART 73—[AMENDED]

1. The authority citation for part 73 continues to read as follows:

Authority: 47 U.S.C. 154, 303.

§ 73.202 [Amended]

2. Section 73.202(b), the Table of FM Allotments under Illinois, is amended by adding Channel 260A, Bartonville.

---

[3] As to such "outside" adjudications and litigation, the petitioners do not request a stay of the reporting requirements where the licensee principal is a named defendant in such actions.

Federal Communications Commission.

Michael C. Ruger,

Assistant Chief, Allocations Branch, Policy and Rules Division, Mass Media Bureau.

[FR Doc. 91-21304 Filed 9-5-91; 8:45 am]

BILLING CODE 6712-01-M

---

47 CFR Part 73

[MM Docket No. 89-495; RM-6940; RM-7272]

Radio Broadcasting Services; Culebra and Vieques, PR, Christiansted, VI

AGENCY: Federal Communications Commission.

ACTION: Final rule.

SUMMARY: The Commission, at the request of Maria del Carmen Aviles, allots Channel 293A to Culebra, Puerto Rico, as the community's first local FM service. See 54 FR 48285, November 22, 1989. The Commission also denies the counterproposal of V.I. Stereo Communications Corporation requesting the reallotment of Channel 291B from Christiansted, Virgin Islands, to either Vieques or Culebra, Puerto Rico, and the modification of Station WVIS' license accordingly. Channel 293A can be allocated to Culebra in compliance with the Commission's minimum distance separation requirements without the imposition of a site restriction, at coordinates North Latitude 18°18'18" and West Longitude 65°18'06". With this action, this proceeding is terminated.

DATES: Effective October 15, 1991. The window period for filing applications will be open on October 16, 1991, and close on November 15, 1991.

FOR FURTHER INFORMATION CONTACT: Leslie K. Shapiro, Mass Media Bureau, (202) 634-6530.

SUPPLEMENTARY INFORMATION: This is a synopsis of the Commission's Report and Order, MM Docket No. 89-495, adopted August 20, 1991, and released August 30, 1991. The full text of this Commission decision is available for inspection and copying during normal business hours in the FCC Dockets Branch (room 230), 1919 M Street, NW., Washington, DC. The complete text of this decision may also be purchased from the Commission's copy contractor, Downtown Copy Center, (202) 452-1422, 1714 21st Street, NW., Washington, DC 20036.

List of Subjects in 47 CFR Part 73

Radio broadcasting.

PART 73—[AMENDED]

1. The authority citation for part 73 continues to read as follows:

Authority: 47 U.S.C. 154, 303.

§ 73.202 [Amended]

2. Section 73.202(b), the Table of FM Allotments under Puerto Rico, is amended by adding Culebra, Channel 293A.

Federal Communications Commission.

Michael C. Ruger,

Assistant Chief, Allocations Branch, Policy and Rules Division, Mass Media Bureau.

[FR Doc. 91-21306 Filed 9-5-91; 8:45 am]

BILLING CODE 6712-01-M

---

47 CFR Part 73

[MM Docket No. 90-644; RM-7543, RM-7688]

Radio Broadcasting Services; Crozet and Dillwyn, VA

AGENCY: Federal Communications Commission.

ACTION: Final rule.

SUMMARY: The Commission, at the request of James Madison University allots Channel *278A to Crozet, Virginia, as a reserved channel for noncommercial use, to provide the community with an additional FM service. At the request of High Communications Partnership, the Commission allots Channel 229A to Dillwyn, Virginia, as the community first local FM service. See 56 FR 01509, January 15, 1991, and Supplemental Information, *infra*. With this action, this proceeding is terminated.

EFFECTIVE DATE: October 15, 1991. The window period for filing applications for Dillwyn, Virginia, will open on October 16, 1991, and close on November 15, 1991.

FOR FURTHER INFORMATION CONTACT: Pamela Blumenthal, Mass Media Bureau, (202) 634-6530.

SUPPLEMENTARY INFORMATION: This is a synopsis of the Commission's Report and Order, MM Docket No. 90-644, adopted August 16, 1991, and released August 30, 1991. The full text of this Commission decision is available for inspection and copying during normal business hours in the FCC Dockets Branch (Room 230), 1919 M Street, NW., Washington, DC. The complete text of this decision may also be purchased from the Commission's copy contractor, Downtown Copy Center, (202) 452-1422, 1714 21st Street, NW., Washington, DC 20036.

Channel *278A and Channel 229A can be allotted to Crozet and Dillwyn, Virginia, respectively, in compliance with the Commission's minimum distance separation requirements. Channel *278A can be allotted to Crozet, Virginia, with a site restriction of 9.7 kilometers (6.0 miles) south to avoid short-spacings to Station WGMS(FM), Channel 278B, Washington, DC and to vacant but applied for Channel 277A, New Market, Virginia. The coordinates for Channel *278A at Crozet are North Latitude 37-59-06 and West Longitude 78-44-05. Channel 229A can be allotted to Dillwyn, Virginia, with a site restriction of 8.3 kilometers (5.1 miles) west of the community to avoid a short-spacing to Station WBBC(FM), Channel 228A, Blackstone, Virginia. The coordinates for Channel 229A at Dillwyn are North Latitude 37-33-05 and West Longitude 78-32-31. Since the allotments are located within the protected areas of the National Radio Astronomy Observatory "Quiet Zone" at Green Bank, West Virginia, applicants will be required to comply with the notification requirement of § 73.1030(a) of the Commission's Rules.

List of Subjects in 47 CFR Part 73

Radio Broadcasting.

PART 73—[AMENDED]

1. The authority citation for part 73 continues to read as follows:

Authority: 47 U.S.C. 154, 303.

§ 73.202 [Amended]

2. Section 73.202(b), the Table of FM Allotments under Virginia, is amended by adding *278A at Crozet and by adding 229A, Dillwyn.

Federal Communications Commission.

Michael C. Ruger,

Assistant Chief, Allocations Branch, Policy and Rules Division, Mass Media Bureau.

[FR Doc. 91-21305 Filed 9-5-91; 8:45 am]

BILLING CODE 6712-01-M

DEPARTMENT OF VETERANS AFFAIRS

48 CFR Parts 819 and 852

RIN 2900-AE90

VA Acquisition Regulation: Expansion of Procurement Preference Program

AGENCY: Department of Veterans Affairs.

ACTION: Final rule.

SUMMARY: The Department of Veterans Affairs (VA) is amending the VA Acquisition Regulation (VAAR) to expand the existing Vietnam Era and Disabled Veteran-Owned Small Business Outreach Program to include all veteran-owned businesses. The

existing Procurement Preference Program Goals Report is also being codified. This amendment implements the initiative of the Deputy Secretary of VA and enables contracting activities to solicit offers from a larger category of veterans on a preferred basis.

EFFECTIVE DATE: December 3, 1990.

FOR FURTHER INFORMATION CONTACT: Sherry Patton, Acquisition Policy Division (95A), Office of Acquisition and Materiel Management, Department of Veterans Affairs, 810 Vermont Avenue, NW., Washington, DC 20420, (202) 233-5001.

SUPPLEMENTARY INFORMATION:

I. Background

This regulation change was published as an interim final rule at 55 FR 49899 on December 3, 1990, in order to solicit public comment on the expansion of the Department of Veterans Affairs Veterans Preference Program. No comments were received from the public. In addition to these amendments, however, §§ 819.201, 819.202-5, and 819.202-70 are being amended to reflect internal reorganizations, editorial corrections, and technical changes that were made for clarification purposes. Accordingly, the interim final rule is being adopted with these changes.

II. Executive Order 12291

Pursuant to the memorandum from the Director, Office of Management and Budget, to the Administrator, Office of Information and Regulatory Affairs, dated December 13, 1984, this rule is exempt from sections 3 and 4 of Executive Order 12291.

III. Regulatory Flexibility Act (RFA)

Since a notice of proposed rulemaking is unnecessary and will not be published, these amendments do not come within the term "rule" as defined in the Regulatory Flexibility Act, 5 U.S.C. 601(2) and are, therefore, not subject to the requirements of the Act. Nevertheless, these amendments will not have a significant economic impact on a substantial number of small entities as they are defined in the Regulatory Flexibility Act, 5 U.S.C. 601-612.

IV. Paperwork Reduction Act

The Paperwork Reduction Act does not apply to these final regulations.

List of Subjects in 48 CFR Parts 819 and 852

Government procurement.

Approved: August 28, 1991.

Edward J. Derwinski,

Secretary of Veterans Affairs.

Accordingly, the interim rule amending 48 CFR parts 819 and 852, which was published at 55 FR 49899 on December 3, 1990, is adopted as a final rule with the following changes:

PART 819—SMALL BUSINESS AND SMALL DISADVANTAGED BUSINESS CONCERNS

1. The authority citations for part 819 continues to read as follows:

Authority: 38 U.S.C. 210 and 40 U.S.C. 486(c).

Subpart 819.2—[Amended]

2. In subpart 819.2, § 819.201, the first sentence of paragraph (d) is revised to read as follows:

819.201 General policy.

* * * * *

(d) The Director, National Cemetery System; Chief Benefits Director; Deputy Assistant Secretary for Facilities; Deputy Assistant Secretary for Administration; Director, Acquisition Operations Service; Director, VA Marketing Center; and Directors of field facilities with acquisition and materiel management activities will designate an employee of their respective organizations to serve as a small and small disadvantaged business specialist.

* * *

3. In subpart 819.2, § 819.202-5, the first sentence in paragraph (c) is amended by removing the word "as", and paragraphs (c)(1), (c)(2) and (c)(7) are revised to read as follows:

819.202-5 Data collection and reporting requirements.

* * * * *

(c) * * *

(1) Estimate of the total procurement dollar expenditures (excluding delivery orders against General Services Administration (GSA) FSS contracts).

(2) Small business awards (includes paragraphs (c)(3) through (c)(5) of this section).

* * * * *

(7) Veteran-owned business awards (includes paragraphs (c)(8) and (c)(9) of this section).

* * * * *

4. In subpart 819.2, § 819.202-5, the first sentence in paragraph (e) is amended by removing the word "procuring" and adding, in its place, the word "acquisition"; the second sentence in paragraph (f) is amended by removing the word "goal" and adding, in its place, the word "goals"; and paragraph (g) is amended by removing the paragraph designation "(c)(12)" and adding, in its place, the paragraph designation "(c)(9)", and by adding the acronym "VA" before the word "Federal".

5. In subpart 819.2, § 819.202-5, paragraph (h) is revised to read as follows:

819.202-5 Data collection and reporting requirements.

* * * * *

(h) Achievement of subcontracting goals shall be reported by the Office of Facilities, the Office of Acquisition and Materiel Management, and the VA Marketing Center on a semiannual basis, to be received by OSDBU not later than April 30 for the period ending March 31, and November 1 for the period ending September 30.

6. In subpart 819.2, § 819.202-70, paragraph (d) is revised and paragraph (m) is amended by adding the word "the" before the acronym "PCR's"; so the revised text reads as follows:

819.202-70 Additional responsibilities.

* * * * *

(d) On an annual basis, VA acquisition personnel shall request a Procurement Automated Source System (PASS) listing of veteran-owned, including Vietnam era and disabled, and woman-owned businesses capable of meeting identified requirements. Acquisition personnel will utilize PASS as a primary source file. Firms identified on the PASS list shall be included on solicitation mailing lists.

* * * * *

[FR Doc. 91-21343 Filed 9-5-91; 8:45 am]

BILLING CODE 8320-01-M

Proposed Rules

Federal Register
Vol. 56, No. 173
Friday, September 6, 1991

This section of the FEDERAL REGISTER contains notices to the public of the proposed issuance of rules and regulations. The purpose of these notices is to give interested persons an opportunity to participate in the rule making prior to the adoption of the final rules.

OFFICE OF PERSONNEL MANAGEMENT

5 CFR Part 410

RIN 3206-AE60

Training

AGENCY: Office of Personnel Management.

ACTION: Proposed rulemaking.

SUMMARY: The Office of Personnel Management (OPM) is proposing to amend its regulations governing the training of Federal employees to implement provisions of Public Law 101-510, dated November 5, 1990. That law amended the statute governing Federal employee training by adding a provision directing that OPM, through its training regulations, allow agencies to authorize training without regard to the constraints in the training law on "academic degree training," if the training is necessary to assist in the recruitment or retention of employees in shortage occupations.

DATES: Written comments will be considered if received no later than November 5, 1991.

ADDRESSES: Send or deliver written comments to Dona Wolf, Director, Human Resources Development Group, Office of Personnel Management, room 5305, 1900 E Street NW., Washington, DC 20415.

FOR FURTHER INFORMATION CONTACT: Frank Masterson (202) 632-9769 or (FTS) 632-9769.

SUPPLEMENTARY INFORMATION: Public Law 101-510 (National Defense Authorization Act for Fiscal Year 1991) amended the training law (5 U.S.C. chapter 41) by providing in 5 U.S.C. 4107 that OPM include, as an exception to constraints in the training law, provisions in its regulations under which agencies may authorize training leading to an academic degree, if necessary to assist in the recruitment or retention of employees in occupations in which there are existing or anticipated shortages of qualified personnel, especially in those with critical skills.

In drafting its implementing regulations, OPM was guided by a perceived need to allow maximum delegation of authority to agencies in making determinations to authorize "academic degree training" within broad criteria provided by OPM. If any agency chooses to use this new authority, it would need to pay particular attention to shortage occupations involving critical skills. Because we believe each agency is in a better position than OPM to identify such occupations, the proposed regulations reflect a delegation to each agency to determine which of its shortage occupations involve skills critical to its mission.

In some instances, determinations of shortages will already have been made by OPM or some other competent authority. In other instances, shortages will need to be determined by the employing agency after appropriate consideration has been given to the availability of sources of qualified personnel and other relevant information. Agencies will document the basis for their shortage determinations.

To assist in recruitment for a position for which there is an identified shortage (either existing or anticipated), an agency would be authorized under the proposed regulations to provide "academic degree training" which would help to qualify the employee for the position, if there is reasonable expectation of placement after the training.

To assist in the retention of an employee in an occupation for which there is an identified shortage (existing or anticipated), an agency would be authorized under the proposed regulations to provide "academic degree training," if it involves a field of study in which the courses are mainly selected for their potential contribution to effective performance in that occupation.

The authority which an agency would have under the proposed regulations in dealing with recruitment or retention problems in shortage occupations contrasts with the authority an agency has to provide training to employees in other occupations. For someone in a non-shortage occupation, the law's constraint on training which would afford an employee an opportunity to acquire an academic degree applies: An agency can only pay for academic courses that meet the test of relevancy to official duties. If such an employee, after receiving job-relevant academic training, became eligible for an academic degree, acquisition of the degree would be viewed as an incidental byproduct, not the purpose of the training.

The proposed regulations reflect the prohibition in the amended 5 U.S.C. 4107 on providing "academic degree training" on behalf of an employee occupying or seeking to qualify for appointment to a position excepted from the competitive service because of its confidential, policy-determining, policy-making, or policy-advocating character.

The proposed regulations also reflect the provision in the amended 5 U.S.C. 4107 that selections for "academic degree training" shall be in accordance with merit principles and take into consideration the need to maintain a balanced workforce in which women and members of racial and ethnic minority groups are appropriately represented.

To facilitate the use of this new authority, agencies may want to integrate their policies for providing "academic degree training" into their plans for using the other recently enacted recruitment and retention authorities, i.e., the authority to make recruitment, relocation, and retention payments and the authority to repay student loans.

E.O. 12291, Federal Regulation

I have determined that this is not a major rule as defined in E.O. 12291, Federal Regulation.

Regulatory Flexibility Act

I certify that these regulations will not have a significant economic impact on a substantial number of small entities because they affect only Federal employees and agencies.

List of Subjects in 5 CFR Part 410

Authority delegation, Education, Government employees, Manpower training programs, Personnel Management Office.

Office of Personnel Management.

Constance Berry Newman,

Director.

Accordingly, the Office of Personnel Management proposes to amend 5 CFR part 410 as follows:

1. The authority citation for part 410 is revised to read as follows:

Authority: 5 U.S.C. 4101, *et seq.*; E.O. 11348, 3 CFR, 1967 Comp. p. 275 § 410.503 also issued under 5 U.S.C. 5364. § 410.506, § 410.511, and § 410.602 also issued under 5 U.S.C. 1104. § 410.902 also issued under 42 U.S.C. 4746.

2. Section 410.511 is added to read as follows:

§ 410.511 Exceptions to the constraints on "academic degree training" to relieve recruitment or retention problems.

(a) *General.* (1) An agency may authorize training not otherwise allowable under 5 U.S.C. 4107(c) if the training:

(i) Is necessary to assist in the recruitment or retention of an employee in an occupation in which it has or anticipates a shortage of qualified personnel, especially in occupations involving critical skills and

(ii) Meets the conditions of this section.

(2) In exercising the authority in this section, an agency shall give priority to relieving shortages in occupations which it has determined involve skills critical to its mission.

(3) In exercising the authority in this section, an agency shall, consistent with the merit system principles set forth in 5 U.S.C. 2301(b)(1) and (2), take into consideration the need to maintain a balanced workforce in which women and members of racial and ethnic minority groups are appropriately represented in the agency.

(4) The authority in this section shall not be exercised on behalf of any employee occupying, or seeking to qualify for appointment to, any position which is excepted from the competitive service because of its confidential, policy-determining, policy-making, or policy-advocating character.

(5) An agency's policies established pursuant to § 410.302(a) of this part shall cover decisions to authorize training under this section to ensure that:

(i) the determination to pay for degree training is made by the agency head or other officials to which the authority has been delegated,

(ii) the authority is used so as to address the agency's recruitment and retention problems expeditiously through appropriate delegations of authority, and

(iii) consideration is given to the cost-effectiveness of educational institutions in selecting training facilities under § 410.502(a) of this subpart.

(b) *Pre-determined shortages.* For the purposes of this section, there shall be deemed to be a shortage of qualified personnel in positions—

(1) For which a special salary rate schedule established pursuant to 5 U.S.C. 5305 is in effect;

(2) Filled by members of the National Defense Executive Reserve program who are called to duty in the event of a national emergency;

(3) For which direct-hire authority has been granted by OPM, covering all positions in a specific series, grade, and geographic location;

(4) Identified by law as having such a shortage; or

(5) Identified by a Federal agency as having such a shortage when authorized by law to do so.

(c) *Shortage determinations by employing agency.* If a determination of a shortage as described in paragraph (b) of this section has not been made which would be applicable to a particular recruitment or retention problem, an agency may, for the purposes of this section, determine that it either has or anticipates a shortage of qualified personnel, using the criteria in paragraph (d) or (e) of this section, as appropriate.

(d) *Recruitment problem.* Before determining that an agency has or anticipates a problem in the recruitment of qualified personnel for a particular position, an agency shall make a reasonable recruitment effort. In making a reasonable recruitment effort, an agency will consider the following:

(1) For a position in the competitive service, the results of requests for referral of eligibles from the appropriate competitive examination. For a position in the excepted service, the agency's objectives and staffing procedures.

(2) Contacts with State Employment Service office(s) serving the locality concerned.

(3) Contacts with academic institutions, technical and professional organizations, and other organizations, likely to produce qualified candidates for the position, including women's and minority-group organizations.

(4) The possibility of relieving the shortage through broader publicity and recruitment.

(5) The availability of qualified candidates within the agency's current work force.

(6) The possibility of relieving the shortage through job engineering or training of current employees.

(e) *Retention problem.* Before determining that an agency has or anticipates a problem in the retention of qualified personnel in a particular occupation, an agency shall consider the following:

(1) The ease with which an agency could replace someone of comparable background.

(2) The current and projected vacancy rates in the occupation.

(3) The rate of turnover in the occupation.

(4) Technological changes affecting the occupation and long-range predictions affecting staffing for the occupation.

(f) *Continuing problems.* An agency may use a determination made under paragraph (d) or (e) of this section to address recruitment or retention problems through training under this section if—

(1) The problems are similar in essential characteristics (occupation, series, grade, geographic locality) to that covered by the initial determination; and

(2) It has evidence that the original problem is a continuing one. A reassessment of a "continuing" recruitment or retention problem shall be made periodically.

(g) *Authorization of training.* (1) Training, which is full or part-time, may be authorized under this section to address a recruitment problem to the extent that it qualified an employee in a shortage position identified under paragraph (b) or (d) of this section, if the agency makes a finding that there is reasonable expectation that the employee would be employed in the position after the training.

(2) Training may be authorized under this section for the purpose of retaining an employee in a shortage occupation identified under paragraph (b) or (e) of this section, if it involves a course of study which is mainly selected for its potential contribution to effective performance in that occupation.

(h) *Monitoring of training.* (1) An agency shall monitor training assignments made under this section. Continuation of an employee in a training assignment under this section shall be based on—

(i) An expectation that the shortage determination serving as the basis for the training has continuing validity; and

(ii) A determination that academic and job performance while in the course of study are to the agency's satisfaction.

(2) An agency shall assess the contribution of training assignments under this section to the resolution of recruitment or retention problems in its shortage occupations.

(i) *Documentation.* (1) In exercising the authority in this section, an agency shall retain in the servicing personnel

office for 3 years or some period of time beyond completion of training or degree—

(i) A record of the employees who are assigned to training under this section; and

(ii) A record of any finding that a determination under paragraph (f) of this section is a continuing one, showing the evidence leading to that finding and any reassessment of such a finding.

(2) As a separate record, the servicing personnel office shall keep in the Official Personnel Folder of each such employee the following information:

(i) Justification for the shortage determination. If made under paragraph (b) of this section, the nature of that determination is identified. If made under paragraph (d) or (e) of this section, the shortage is described (in terms of occupational series, grade or grade range, geographical locality, and organizational assignment) and the agency's findings are recorded.

(ii) Kind of training (e.g., cooperative-education tuition assistance program, continuing professional/technical education, retraining for occupational change); a description of the field of study; and the nature of any degree pursued under the training program.

[FR Doc. 91-21312 Filed 9-5-91; 8:45 am]

BILLING CODE 6325-01-M

SECURITIES AND EXCHANGE COMMISSION

17 CFR Parts 240 and 249

[Release No. 34-29635; File No. S7-25-91; International Series Release No. 311]

RIN 3235-AF44

Proposed Temporary Risk Assessment Rules

AGENCY: Securities and Exchange Commission.

ACTION: Proposal of Temporary Rules 17h-1T and 17h-2T.

SUMMARY: The Securities and Exchange Commission is proposing for comment temporary Rules 17h-1T and 17h-2T (17 CFR 240.17h-1T and 17 CFR 240.17h-2T) under the Securities Exchange Act of 1934 (the "Exchange Act"). Proposed Rule 17h-1T would require broker-dealers to maintain and preserve records and other information concerning certain of the broker-dealer's associated persons. The requirement to maintain and preserve records and other information under proposed Rule 17h-1T would extend to the financial and securities activities of the holding companies, affiliates, or subsidiaries of a broker or dealer that are reasonably likely to have a material impact on the financial and operational condition of the broker or dealer. Proposed Rule 17h-2T would require registered broker-dealers to file with the Commission quarterly summary reports of the information required to be maintained and preserved by Rule 17h-1T. The temporary rules are being proposed pursuant to the authority conferred on the Commission by the risk assessment provisions of the Market Reform Act of 1990 and are intended to give the Commission access to information concerning the financial and securities activities of certain broker-dealer affiliates. The Commission requests comment on the proposed rules. In particular, the Commission requests comment on whether, and to what extent, reports or information filed by associated persons of broker-dealers with other domestic or foreign regulatory entities would be sufficient for Commission risk assessment purposes.

DATES: Comments to be received on or before November 5, 1991.

ADDRESSES: Persons wishing to submit written comments should file three copies with Jonathan G. Katz, Secretary, Securities and Exchange Commission, 450 Fifth Street NW., Stop 6-9, Washington, DC 20549. All comment letters should refer to File No. S7-25-91. All comments received will be available for public inspection and copying in the Commission's Public Reference Room, 450 Fifth Street NW., Washington, DC, 20549.

FOR FURTHER INFORMATION CONTACT: Michael A. Macchiaroli, (202) 272-2904 or Roger G. Coffin, (202) 272-2396, Division of Market Regulation, 450 Fifth Street NW., Washington, DC 20549.

SUPPLEMENTARY INFORMATION:

I. Introduction

A. Background

During the past decade, the securities markets have experienced expansion and evolution. The volume of trading on the securities exchanges and in the over-the-counter markets has grown tremendously. The development of innovative financial products, such as stock index futures, has linked the securities and commodities futures markets through complex trading strategies implemented by major market participants. Advances in communications and information technology have accelerated the pace at which information is disseminated through the markets, increasing the speed at which the markets react to information. Trading has expanded beyond national borders; a global marketplace has unfolded.

Market participants have adapted and transformed along with the markets. Where formerly participants in the U.S. securities markets were primarily individual investors, today's markets are often dominated by institutional investors. The broker-dealer community has reacted to the changes in the financial landscape through expansion and diversification. Many broker-dealers have begun to rely less on traditional revenue sources, such as agency transactions, and have become involved in activities such as proprietary trading and merchant banking, which require large capital bases. To acquire the capital necessary to remain competitive in a rapidly expanding global marketplace, firms have turned to the public equity markets, have increased their leverage, or have merged or affiliated themselves with other entities.

As a consequence, many large investment banking firms are now owned by holding companies that have other subsidiaries engaging in financial and securities related activities throughout the globe. In many instances, the holding companies or affiliates of the broker-dealer operate with little or no regulatory oversight. These unregulated entities can attain a degree of leverage and assume credit risks which registered broker-dealers, subject to the Commission's net capital and customer protection rules, cannot. Specifically, many potentially risky activities, such as interest rate swaps, bridge loans, and foreign currency transactions are affected by unregulated holding companies and affiliates of the broker-dealer.[1] In some cases, the registered broker-dealer's parent or affiliates have significantly less capital than the broker-dealer. Where this occurs, creditors may rely on the credit standing of the broker-dealer and the ability of the holding company to obtain capital from the broker-dealer to support bridge financing or other extensions of credit.

[1] The Staff of the Commission, based on conversations with investment banking representatives and financial experts, has estimated that some of the affiliate entities of the major broker-dealers have outstanding, at any given point in time, $50 billion to $100 billion in interest rate swaps (based on the notional amount of those transactions) and $15 billion in foreign currency transactions. In addition, the Staff estimates that the holding companies of the ten largest firms have outstanding approximately $2 billion in bridge loans.

B. Existing Regulatory Framework

Existing Commission regulations deal with capital requirements designed to insulate broker-dealers and their customers from the business failure of the regulated broker-dealer. Specifically, the net capital rule requires that capital sufficient to meet reasonable anticipated business and trading losses remain in the broker-dealer at all times. Moreover, the customer protection rule ensures that customers' fully paid and excess margin securities are segregated and imposes strict controls on use of other customer funds and securities.

Rule 15c3–1 under the Exchange Act (17 CFR 240.15c3–1), the Commission's net capital rule, protects customers and creditors of registered broker-dealers from monetary losses and delays that can occur when the registered broker-dealer fails. In this way, the net capital rule acts to prevent systemic risk from the failure of a financial intermediary. The net capital rule requires registered broker-dealers to maintain sufficient liquid assets to enable firms that fall below the minimum capital requirements to liquidate in an orderly fashion without a formal proceeding. By concentrating on the financial condition of the broker-dealer, the net capital rule insulates the broker-dealer and its customers from financial failures or difficulties of affiliated entities.[2]

Rule 15c3–3 under the Exchange Act (17 CFR 240. 15c3–3), the customer protection rule, complements the net capital rule by preventing the misallocation or misuse of customer funds or securities by broker-dealers. Among other things, the customer protection rule limits a broker-dealer's use of customer monies to finance the broker-dealer's businesses, except as necessary to finance customer transactions. Both the customer protection and the net capital rules focus specifically on the broker-dealer itself; the financial condition or the activities of holding companies, affiliates, or subsidiaries are not taken into account. Other recordkeeping and reporting rules enable the Commission to obtain records relating to the financial viability of the registered broker-dealer. Rule 17a-5 under the Exchange Act, 17 CFR 240.17a-5, requires registered broker-dealers to file with the Commission and the broker-dealer's designated examining authority various reports concerning the financial and operational condition of the broker-dealer.[3]

Rules 17a-3 and 17a-4 under the Exchange Act (17 CFR 240.17a-3 and 17 240.17a-4), provide for record maintenance and preservation. Rule 17a-3 specifies which records broker-dealers must preserve and maintain. Rule 17a-4 specifies, among other things, that the records and other information required to be kept pursuant to Rule 17a-3 must be maintained in a readily accessible place. Rule 17a-4 also specifies the time periods that broker-dealers must preserve the records required by it and by Rule 17a-3.

Overall, the Commission's financial responsibility and reporting rules have successfully provided a regulatory framework for the protection of customers and creditors of registered broker-dealers. However, while these rules call for detailed financial and operational information of the registered broker-dealer, they do not require the broker-dealer to maintain and preserve records with respect to the activities of its holding company or affiliated parties. Although the rules provide a sound regulatory structure, they do not completely shelter the broker-dealer from the failures of affiliated entities. Broker-dealers are affected by the financial difficulties of affiliated entities both directly, by the withdrawal of capital to meet the obligations of affiliates, and indirectly, by the effect such difficulties can have on the broker-dealers' ability to obtain financing.

This impact on a broker-dealer can be exacerbated in times of market stress. Access to information concerning the activities of associated persons of broker-dealers is particularly pertinent during periods of steep market decline and volatility. For instance, the Commission was particularly concerned about the liquidity and funding of broker-dealers during both the October 1987 market break and the market turbulence of October 1989. Those incidents demonstrated that plunging stock prices may generate an environment of uncertainty that will impact the financial operation of broker-dealers. An abrupt decline in the market can increase the credit risk involved in lending to broker-dealers holding large inventories of equity relative to their capital, lenders may thus become reluctant to continue extending credit. In addition, some broker-dealers may experience temporary difficulties in marketing instruments the proceeds of which are needed to satisfy the financial obligations (*e.g.*, bridge loans) of their clients. Events such as these could lead to a funding or liquidity problem for the holding company parent of a broker-dealer, which may be forced to look to the net capital of the broker-dealer as a means of funding the parent's business.

Likewise, regulatory concerns about the financial condition of broker-dealers can arise at times other than periods of market decline. For example, the activities carried out by the affiliates of a broker-dealer are, in the aggregate, generally more highly leveraged and riskier than permitted by the net capital rule. If a highly leveraged holding company or other affiliate encounters financial difficulties, its financial distress may extend to the registered firm. Financial problems at the holding company level or in a significant affiliate or subsidiary could impact the ability of the broker-dealer to obtain short-term financing to meet its operating and settlement obligations.

Short-term-financings, particularly through the commercial paper market and repurchase agreements, are common financing devices for broker-dealers. If the holding company complex faced a financial predicament, a creditor or contra party might force the broker-dealer to provide additional securities as margin for its repurchase agreements. Even a small increase in required margin levels could force the broker-dealer to liquidate its repurchase agreements and might drastically reduce the firm's short-term financing ability. Similarly, banks may withdraw lines of credit or restrict lending arrangements with broker-dealers because the fiscal health of a related entity has deteriorated. Accordingly, the ability of a broker-dealer to continue operations if a major affiliate ceased operations or met with financial difficulties could be severely impaired. Furthermore, the abrupt liquidation of transactions by a large broker-dealer could seriously affect other market participants as well as disturb the markets themselves.

These concerns are illustrated by the bankruptcy of Drexel Burnham Lambert Group, Inc. ("Drexel"), the holding

[2] However, the fate of a broker-dealer may be inextricably linked to that of its affiliates. Recently, the Commission adopted amendments to the net capital rule concerning the withdrawal of capital from a broker-dealer by a parent or an affiliate. See Securities Exchange Act Release No. 28927 (February 28, 1991); 56 FR 9124, (March 5, 1991). The amendments require broker-dealers to notify the Commission of large capital withdrawals made to benefit affiliates, subsidiaries and other persons related to the broker-dealer. The amendments also prohibit withdrawals of capital if the withdrawals would cause the broker-dealer's net capital to be less then 25 percent of the deductions required by the net capital rule as to the broker-dealer's readily marketable securities. Finally, the amendments give the Commission the authority to halt, by order, certain withdrawals of capital on a temporary basis in emergency situations. The amendments reflect the Commission's growing concern about the effect that related entities can have on the viability of a broker-dealer.

[3] These reports are filed on the Financial and Operational Combined Uniform Single Report (commonly known as the FOCUS report).

company parent of Drexel Burnham Lambert, Inc. ("DBL"), a registered broker-dealer. In this case, Drexel had over $1 billion in commercial paper and other unsecured short-term borrowings outstanding. As a result of significant losses and a downgrade in the rating of its commercial paper, Drexel found it increasingly difficult to renew its short-term borrowings. Drexel was then forced to turn to the only liquid sources of capital in its assets—the excess net capital of DBL and that of an affiliated government securities dealer.

In a period of approximately three weeks, and without the knowledge of the Commission or the New York Stock Exchange, Inc. ("NYSE"), approximately $220 million of the excess capital was transferred from the broker-dealer to the holding company in the form of short-term loans. When the Commission became aware of the situation, Drexel or its affiliates had more than $400 million in short-term liabilities maturing in two weeks and an additional $330 million maturing the next month.

Ultimately, the Commission and the NYSE intervened and prohibited further withdrawals of capital from the registered broker-dealer. Nonetheless, after the bankruptcy filing by its parent Drexel, DBL was forced to declare bankruptcy and liquidate its assets. This case clearly demonstrated that the viability and the ultimate survival of a broker-dealer can be linked to that of its associated persons.[4]

C. The Market Reform Act

Recently, Congress passed the Market Reform Act of 1990 (the "Reform Act") in response to these and other factors.[5] The Reform Act is designed to strengthen the system of regulatory oversight over the securities markets and improve the Commission's regulatory supervision over broker-dealers. Section 4 of the Reform Act entitled "Risk Assessment for Holding Company Systems" added section 17(h) of the Exchange Act.[6]

Section 17(h) provides the Commission with specific authority to obtain information regarding certain activities of broker-dealer affiliates, but does not provide the Commission with any new authority to regulate the activities of those affiliates. New Section 17(h) augments the Commission's broad authority with respect to matters relating to the financial responsibility of broker-dealers and builds on the Commission's statutory authority to adopt recordkeeping and reporting requirements for broker-dealers under section 17(a) of the Exchange Act.

Section 17(h) requires broker-dealers to maintain and preserve such risk assessment information as the Commission by rule prescribes with respect to those associated persons of the broker-dealer whose "business activities are reasonably likely to have a material impact on the financial and operational condition" of the broker-dealer, including the broker-dealer's "net capital, its liquidity, or its ability to finance its operations".[7] The statute provides that the records should concern the broker-dealer's "policies, procedures, or systems for monitoring and controlling financial and operational risks to it resulting from the activities" of its material associated persons and should "describe, in the aggregate, each of the financial and securities activities conducted by, and the customary sources of capital and funding" of associated persons whose business activities are reasonably likely to have a material impact on the broker-dealer".[8] In addition, the Reform Act authorizes the Commission to require broker-dealers to file, no more frequently than quarterly, summary reports of the information and records maintained pursuant to the risk assessment rules.[9]

The Reform Act does not contain a definition of the term "financial and securities activities"; however, the legislative history of the bill illustrates the types of activities that are intended to be included in this term.[10] The list encompasses activities generally understood to be engaged in by entities active in the financial markets. However, several activities, such as manufacturing, consumer lending and certain insurance activities are excluded and are beyond the scope of the risk assessment rules.

Section 17(h) of the Act also empowers the Commission to obtain more detailed reports (sometimes referred to as "call reports") during periods of market stress or when information contained in the quarterly reports or other information leads the Commission to conclude that supplemental information is necessary.

The risk assessment provisions provide the Commission with broad authority, either by rule or by order, to exempt persons or classes of persons from the recordkeeping or reporting requirements. The Commission may grant conditional, permanent or temporary exemptions. The statute directs the Commission to consider a number of factors in granting exemptions which are discussed in greater detail below.

The statute provides that, notwithstanding any other provision of law, the Commission may not be compelled to disclose any information required to be reported by a broker-dealer pursuant to the risk assessment rules or supplied to the Commission by any domestic or foreign regulatory agency.[11] The statute expressly exempts risk assessment information from disclosure to the public under the Freedom of Information Act. However, the Commission is not authorized by the statute to withhold risk assessment information from Congress, or from complying with a request for information from any other Federal agency or department requesting the information for purposes within the scope of such agency or department's jurisdiction, or from complying with an order of a court of the United States in an action brought by the United States or the Commission.

II. Proposed Risk Assessment Rules

The Commission preliminarily believes it would be appropriate to propose for public comment two temporary risk assessment rules. The first is a recordkeeping rule which would describe the records and other information that broker-dealers would be required to preserve and maintain. The provisions of proposed Rule 17h–1T apply to all registered broker-dealers and to all municipal securities dealers for which the Commission is the appropriate regulatory agency.

The second would be a reporting rule, and together with the proposed Form 17–H, would set forth the reporting requirements for broker-dealers. Under proposed Rule 17h–2T, broker-dealers would be required to file quarterly reports summarizing the information, records, and any other material compiled pursuant to proposed Rule 17h–1T. Rules 17h–1T and 17h–2T are being proposed on a temporary basis to initiate the risk assessment program as soon as practicable. The Commission

[4] The Commission believes that the amendments regarding capital withdrawals will enable it to monitor diversions of capital within a multi-layered holding company structure and to anticipate and respond to similar scenarios. For a more detailed description of the Drexel scenario, see Securities Exchange Act Release No. 28347, (August 15, 1990); 55 FR 34027, (August 21, 1990).

[5] Pub. L. No. 101–432, 104 Stat. 963 (1990). The Reform Act also addresses other changes in the nation's securities markets.

[6] 15 U.S.C. 78q(h).

[7] See section 17(h)(1) of the Act.

[8] *Id.*

[9] *Id.*

[10] See H.R. Rep. No. 3657, 101st Cong., 2d Sess., at 34 (1990) (hereinafter the "H. Rep.").

[11] See section 17(h)(5) of the Act.

expects that final rules will be proposed and adopted after the staff has gained some experience with the information obtained pursuant to the temporary rules.

A. Reporting and Recordkeeping Requirements

Proposed Rule 17h–1T would require broker-dealers to maintain and preserve two general categories of information concerning each Material Associated Person of the broker-dealer.[12] The first concerns the holding company organization and risk management policies. The second concerns the financial condition of the enterprise and includes information such as consolidating and consolidated financial statements. The records and information required to be maintained and preserved pursuant to proposed Rule 17h–1T will be subject to routine inspection by the Commission. Pursuant to proposed Rule 17h–2T, the reporting rule, broker-dealers will be required to file quarterly summaries of the information maintained pursuant to Rule 17h–1T on proposed Form 17–H. The following general categories of information will be required.

1. Organization, Policies and Risk Management Procedures

(a) *Organizational Chart.* Paragraph (a)(1)(i) of proposed Rule 17h–1T would require a broker-dealer to maintain an organizational chart of the holding company structure. This chart should provide a bird's eye view of the entire organization. Included in the organizational chart would be a designation of which associated persons are Material Associated Persons, together with a statement of the major business lines conducted by the associated persons. The organizational chart would also reflect a flow chart of the organization's consolidation process, which the Commission understands is normally prepared as a part of the audit procedure. Proposed Form 17–H specifies that the chart would be included in the first risk assessment filing made by the broker-dealer and in the year end filing. Quarterly updates are required only when a significant change has occurred in the information on file with the Commission.

(b) *Risk Management Policies.* Paragraphs (a)(1) (ii) through (iv) of proposed Rule 17h–1T would require broker-dealers to maintain specific types of risk management policies. The records required will relate to the broker-dealer's procedures or standards for monitoring and controlling the risks to it resulting from the activities of the Material Associated Persons and would include policies regarding the broker-dealer's and each Material Associated Persons': (1) Credit controls and collateral procedures; (2) sources of funding; and (3) trading risks. The types of policies and procedures required by the risk assessment rules would pertain to the financial and securities activities of the Material Associated Persons only insofar as such activities relate to, or could have an impact on, the registered broker-dealer. The Commission believes these records will be instrumental in attaining an understanding of the internal risk management arrangements in place in the industry. Broker-dealers would be required to include copies of these policies in the first Form 17–H filing and update them on a quarterly basis only if a material change has occurred in the information on file with the Commission.

(c) *Material Legal Proceedings.* Paragraph (a)(1)(v) would require broker-dealers to keep records that describe all material pending legal or arbitration proceedings that are required to be disclosed under generally accepted accounting principles to which any Material Associated Person is a party, or of which any of its property is the subject. This information should be kept in generally the same form and content required by Item 103 of Regulation S–K. This information would be filed with the Commission in the broker-dealer's first Form 17–H; updates would be required only where a material change in the information on file with the Commission has occurred.

(d) *Capital Adequacy Information.* Paragraph (a)(1)(vi) would require broker-dealers to maintain capital adequacy information concerning each Material Associated Person. This item would require records to be maintained concerning: (1) Information relating to total equity and regulatory capital relative to assets; (2) a brief narrative discussion by management concerning the liquidity of assets; and (3) information about the sources of and plans for raising outside capital. Broker-dealers would be required to file these policies with the Commission on an annual basis.

The Commission preliminarily believes that many broker-dealers and their affiliates generally create the records embodying the types of policies, procedures, and standards required by the risk assessment rules for rating agency, internal or other uses. Moreover, the Commission wishes, wherever possible, to allow broker-dealers to use information that is publicly available or has been created for other use. Therefore, the Commission requests comment on the potential impact of these requirements as well as on what types of records are regularly maintained by broker-dealers for internal risk management purposes.

2. Financial Information

As noted above, the second general category of risk assessment information required by proposed Rule 17h–1T includes financial information pertinent to assessing risk in the holding company system. A quarterly summary of the majority of this information will be required to be filed pursuant to proposed Rule 17h–2T.

(a) *Financial Statements.*—The Commission believes that the information contained in the financial statements will be one of the most important elements of the risk assessment filing with the Commission. The following financial statements, on a consolidating and consolidated basis, would be required: (1) Balance sheet; (2) statement of income; (3) statement of cash flows; and (5) notes to the financial statements. The consolidating and consolidated financial statements should include the broker-dealer's ultimate parent and all of its associated entities and depict the organization on a total entity basis to enable the staff to assess its overall financial condition.[13]

The financial statements would be required to be prepared in the form and content specified by Regulation S–X and would be prepared in accordance with generally accepted accounting principles in the United States ("U.S. GAAP"). With respect to associated persons that use a comprehensive set of accounting principles other than U.S. GAAP, a reconciliation to U.S. GAAP should be included in a note to the financial statements. The note should indicate the comprehensive body of accounting principles used to prepare the financial statements. The reconciliation of U.S. GAAP may, however, be limited to income from continuing operations before income taxes and the equity portion of the balance sheet. The

[12] The term "Material Associated Person" is defined in the proposed rules. The recordkeeping and reporting requirements of the proposed risk assessment rules would only extend to those associated persons designated as "Material Associated Persons" by the broker-dealer. The guidelines to be used by broker-dealers in designating Material Associated Persons are discussed in Part B of this section, *infra*.

[13] In case where it would be appropriate, a broker-dealer could combine into a single entry a number of immaterial entities that do not have significant operating revenues.

reconciliation should provide a narrative description of the items that are treated differently by U.S. GAAP and should quantify such items if the Material Associated Person is required to prepare a quantitative comparison to U.S. GAAP under any applicable federal law.

The financial statements should also be accompanied by the footnotes required by GAAP and any other information necessary for an understanding of the information being presented (e.g., summary of significant accounting policies). However, the Commission believes that the additional footnotes required by Regulation S–X but not required by GAAP may be omitted.

Additionally, the notes to the financial statements required by GAAP should be provided only for the consolidated financial information. Footnote disclosure which would substantially duplicate the disclosure contained in the most recent annual consolidated financial statements may be omitted from the quarterly financial statements.

The quarterly financial statements should include information on both a quarterly and year-to-date basis. Comparative financial statements should also be filed for the quarterly and year-to-date consolidated financial information. For further instructions, broker-dealers should refer to Form 17–H which contains a comprehensive set of instructions to be used by broker-dealers in completing the financial statement requirement.

(b) *Aggregate Securities and Commodities Positions.* Aggregate securities and commodities information will be critical to understanding the investment and trading activities of each Material Associated Person and will permit the staff to evaluate the degree of risk undertaken by each firm. Paragraph (a)(2)(iii) would include the aggregate amount of limited partnership interests owned by each Material Associated Person. Aggregate position data, in a level of detail roughly comparable to that required by the FOCUS reports, will be required to be filed quarterly on Form 17–H. Additionally, the rules require a separate listing of each position where any single position exceeds a defined Materiality Threshold.[14]

[14] The term "Materiality Threshold" is defined in the proposed rules to mean the greater of: (A) $100 million; or (B) 10 percent of the broker-dealer's tentative net capital or 10 percent of the Material Associated Person's tangible net worth, whichever is greater.

The Commission requests comment on the burdens imposed by a requirement to compile aggregate position data. In particular, commentators should address whether this information is currently maintained, and whether it can be compiled within the time frames established by the proposed risk assessment rules. The Commission also requests comment on the impact the aggregate securities and commodities requirement could have on any "Chinese Wall" protections put in place by broker-dealers to alleviate insider trading concerns.

(c) *Aggregate Amounts of Interest Rate Swaps and Other Financial Instruments With Off-Balance Sheet Risk.* Paragraph (a)(2)(iv) of proposed Rule 17h–1T would require broker-dealers to maintain records which reflect the aggregate notional amounts and gross payments owed under interest rate swaps, currency exchange swaps, forward agreements, commodity or stock index swaps or other financial instruments with off-balance sheet risk where the Material Associated Person incurs principal risk or otherwise operates a trading book. For the purposes of this requirement, the term "financial instruments with off-balance sheet risk" has the meaning given in Statement of Financial Accounting Standards No. 105. However, only trading commitments would fail within the scope of this requirement. Commitments made in connection with non-financial or non-securities activities, such as where a Material Associated Person enters into a currency exchange agreement to minimize currency risk in long-term contract with an overseas entity would not be reported. Aggregate quarterly summarizes of this information would be filed on Form 17–H, with a separate entry of each commitment where the notional or contractual amount exceeds the Materiality Threshold.

(d) *Bridge Loans and Material Unsecured Extensions of Credit.* Historically, bridge loans have been among the riskier activities conducted by the associated persons of brokerage houses. Although the Commission understands that the amount of new bridge loan financing has declined significantly or has ceased altogether and is not currently a major problem, current exposures need to be monitored on an ongoing basis. Aggregate data would be maintained and filed with the Commission, with a separate listing of large exposures.

(e) *Material Credit Extensions Between a Material Associated Person and Other Associated Persons Whether or Not Designated Material Associated Persons.* Paragraph (a)(2)(vi) would cover a material loan by a Material Associated Person to an affiliate outside of the immediate or secondary holding company structure which may not be designated a Material Associated Person. The Commission believes this information will help to provide an early warning function in situations where sudden capital distributions presage funding or other financial difficulties in the holding company system.

(f) *Commercial Paper and Other Financing Information.* Many broker-dealers rely on short-term financing, chiefly commercial paper, to fund their daily operations. Most of the commercial paper is issued by the immediate holding company of the registered broker-dealer, and the Commission believes that careful monitoring of this important funding source will be an integral component of the risk assessment program. Paragraph (a)(2)(vii) of proposed Rule 17h–1T would require information regarding any financing arrangement where a payment is scheduled to be made by a Material Associated Person within one year.

(g) *Investments in Affiliated Companies.* Paragraph (a)(2)(viii) of proposed Rule 17h–1T would require broker-dealers to keep records concerning each Material Associated Person's investments in associated companies. This item will be useful, in conjunction with the financial statements, to analyze the overall financial structure of the reporting entities.

(h) *Material Mortgage Loan and Real Estate Activities.* The Commission is particularly concerned about the impact mortgage loans and real estate investments made by Material Associated Persons could have on the broker-dealer. Therefore, the Commission expects the staff to pay particular attention to these activities.

Included in the recordkeeping and reporting requirements would be information regarding the real estate or mortgage loan or investment type (e.g., commercial or residential), a geographic distribution and breakdown of such activities by year, and information about non-performing and defaulting investments or loans. The Commission stresses that here, as well as throughout the risk assessment recordkeeping and reporting rules, broker-dealers are encouraged to utilize data that has been already created for regulatory or internal management use. Moreover, the Commission solicits comment on the types of records created for management and whether the proposed

rules will create a significant recordkeeping and reporting burden.

(i) *Material Lease Financing Activities.* Aggregate data concerning the lease financings activities of Material Associated Persons will be required. Certain broker-dealer affiliates currently engage in activities consisting of direct financing and leveraged leasing of transportation, data processing and other equipment and facilities. Quarterly data would be filed to the Commission on Form 17–H.

The Commission requests comment on the above recordkeeping and reporting requirements. Specifically, the Commission requests comment from broker-dealers that are owned by foreign entities or other U.S. regulated companies that currently file financial information with such foreign or U.S. regulatory agencies. The exemptive provisions of Rules 17h–1T and 17h–2T permit the Commission to accept, in appropriate circumstances, the financial statements and other data filed with other regulatory bodies for the purposes of risk assessment. The Commission therefore requests comment on the form and content of such financial data and whether, and in what circumstances it would be appropriate to allow broker-dealers to file, without reformatting, already existing financial information with the Commission.

B. Scope of Risk Assessment Rules

The statutory standard requires broker-dealers to keep records with respect to those associated persons of the broker-dealer whose "business activities are reasonably likely to have a material impact on the financial and operational condition of the broker-dealer". The term associated person of a broker or dealer is defined in section 3(a)(18) of the Exchange Act.[15] For the purposes of the risk assessment rules, the term does not include natural persons.[16]

The Reform Act does not define which associated persons would fall under the statutory standard; however, the legislative history accompanying the Reform Act suggests a flexible facts and circumstances approach.[17] The determination of which associated persons are material to the registered broker-dealer should depend on an examination of the relevant facts and circumstances. In this regard, the Commission does not believe it would be appropriate to establish a rigid test that would apply to all associated persons in all circumstances because of the many diverse holding company structures that currently own all or a part of registered broker-dealer. Rather, the Commission preliminarily believes that it would be appropriate, especially in the initial phase of the risk assessment program, to leave the determination of which affiliates would have a material impact up to the reporting broker-dealer. Therefore, the proposed rules include the concept of a "Material Associated Person," the designation of which would trigger the risk assessment recordkeeping and reporting obligations.

In determining whether an associated person is a Material Associated Person, however, broker-dealers must generally consider the nature of the legal and financial relationship between the broker-dealer and its associated person, the probability that the associated person's activities may have an adverse impact on the firm, and the magnitude of that impact. Proposed Rule 17h-1T includes an illustrative list of factors relevant to a materiality determination. The following factors are contained in the proposed rule.

The first relevant factor to the determination of materiality is the nature and proximity of the relationship between the registered firm and an associated person. The relationship may depend on the position a broker-dealer occupies within a holding company hierarchy. For example, some broker-dealer holding company structures consist of at least two layers. The first holding company level usually includes the direct holding company parent of the broker-dealer and a number of related financial services entities. The Commission preliminarily believes the activities of these entities are unquestionably material to the broker-dealer and they should be designated Material Associated Persons. The next layer may consist of a corporate holding company which has a controlling interest in the broker-dealer holding company and often one or more other intermediate holding companies that engage in businesses independent of the broker-dealer. The reach of the proposed rules will, in some instances, extend farther than the broker-dealer's immediate parent and its affiliates. For example, other immediate holding companies and the ultimate parent corporation may meet the material impact test. A potential bankruptcy filing by the ultimate parent company could directly threaten the broker-dealer's ability to obtain credit or might interfere with the broker-dealer's access to the clearance and settlement system. On the other hand, there may be situations where, after an evaluation of all the relevant circumstances, it appears that associated persons in the upper levels of the holding company hierarchy could have only a remote impact on the financial and operational condition of the broker-dealer and they should not therefore, be designated Material Associated Persons.

Another factor relevant to the materiality analysis is the overall funding needs of the broker-dealer and the degree, if any, to which the broker-dealer is financially dependent upon the associated person. Specifically, where a broker-dealer relies on the commercial paper or other unsecured credit of the holding company for financing, the broker-dealer would be materially affected by an acceleration or call by holders of such obligations because of events at the holding company level. These circumstances would be particularly troublesome if the broker-dealer, the holding company or other affiliates lacked sufficient liquid assets or alternative lines of credit to replace the unsecured financing. These conditions existed in the case of Drexel and its registered broker-dealer DBL.

The degree to which the broker-dealer or its customers rely on the associated person for operational services or support is also a factor. Merely offering products or services to the customers of a broker-dealer, such as the insurance products to brokerage customers will, by itself, not rise to the level of materiality called for by the proposed rules. However, if the broker-dealer relies on the associated person for significant operational facilities or services, the activities or financial troubles of the associated person may well have a material impact on the financial or operational condition of the broker-dealer. Within this category are those associated persons who provide financial services to customers of the broker-dealer, as in the case of an interest rate swap or a bridge loan arranged by an associated person in connection with underwriting or merger activities.

A fourth materiality factor is the level of risk present in the activities of the broker-dealer or its associated persons. For instance, some financial and securities activities, such as agency

[15] Section 3(a)(18) of the Exchange Act, 15 U.S.C. 78c(a)(18), defines an "associated person of a broker or dealer" as "any partner, officer, director, or branch manager of such broker or dealer (or any person occupying a similar status or performing similar functions), any person directly or indirectly controlling, controlled by, or under common control with such broker or dealer, or any employee of such broker or dealer * * *."

[16] See Section 17(h)(1) of the Act.

[17] See H. Rep. 27.

securities transactions not involving margin lending or mutual fund distributions, involve lower degress of risk than do merchant banking activities, commercial lending, insurance underwritting, proprietary trading, and venture capital activities. Consequently, associated persons that engage in activities associated with high degrees of risk are more likely to encounter financial difficulties, and are therefore more likely to have a material impact on the registered firm. Additionally, a relevant consideration in this category is the degree of leverage in the associated entity. Activities which by themselves do not entail a high level of risk become riskier when conducted with an inordinate degree of leaverage.

Finally, the extent to which the associated person has the ability or the authority to cause a withdrawal of capital from the broker-dealer is a central consideration under the proposed rules. Where the holding company or an affiliate of a broker-dealer has the ability to remove capital from the firm, either in the form of dividends, other than routine dividends paid out of a portion of current operating profits, or repayment of debt or loans, that person's activities generally are material to the broker-dealer. The recordkeeping and reporting requirements of proposed Rules 17h-1T and 17h-2T would, in many cases, be triggered with respect to any associated person with such authority.

The Commission believes that broker-dealers should make the initial determination, based on overall facts and circumstances, of which associated persons are Material Associated Persons. Once the risk assessment program has commenced, the Commission will be able to oversee and evaluate the decisions made by each broker-dealer. The Commission believes that this approach is the most workable manner to provide guidance to the industry on this issue. Moreover, the Commission expects that the early stages of the risk assessment program will be characterized by a continuing dialogue between the broker-dealer community and the staff. Through this dialogue, the staff will be able to identify which entities should be included in the broker-dealer's risk assessment reports.

3. Filing Requirements

Proposed Rule 17h-1T specifies that a Form 17-H must be filed within forty-five days after the end of each of the broker-dealer's fiscal quarters. Broker-dealers may file the cumulative year-end financial statements within 90 days of the end of the fiscal year. In such a case, the information regarding aggregate securities and commodities positions, real estate, and the other items included in Part II of Form 17-H would still have to be filed within 45 days of the fiscal year end. Proposed Rule 17h-2T also specifies that the material complied by broker-dealers must be preserved in accordance with the provisions of Rule 17a-4. For example, Rule 17a-4 requires that records must be maintained in a readily accessible place. Proposed Rule 17h-2T also requires broker-dealers to keep the information for a period of not less than three years. All information filed to the Commission pursuant to proposed Rule 17h-2T will be deemed confidential.

The Commission notes that the proposed rules contain a procedure available to holding companies that contain more than one registered broker-dealer. In these instances, the largest broker-dealer in the organization may apply to the Commission to be designated a "Reporting Broker or Dealer" for the purposes of the risk assessment rules. Once the Commission has designated a particular broker-dealer the Reporting Broker or Dealer for the organization, only the Reporting Broker or Dealer would be required to file risk assessment information with the Commission, and the other registered broker-dealers in the enterprise would be relieved of the filing burden.

4. Exemptions

The risk assessment provisions of the Reform Act were designed to give the Commission greater advance warning of situations, such as the Drexel failure, which could have a significant impact on the functioning of the markets and investors in general. The proposed risk assessment rules are intended to give the Commission access to the types of information that will alert the staff to potentially significant problems within a broker-dealer holding company. The Commission preliminarily believes that the majority of registered broker-dealers that conduct a business with the public do not pose the types of risks the Reform Act was designed to address.[18] The Commission initially believes that the risk assessment program should include the segment of the industry that includes the broker-dealers that pose the greatest risks to customers and to the markets.[19]

Included in the group of brokers or dealers whose activities are not likely to pose a material threat to the investing public or the marketplace are the many limited purpose mutual fund brokers who are already exempt from the provisions of the customer protection rule. This category would include the firms associated with insurance companies that are registered with the Commission as broker-dealers in order to offer variable annuity and other insurance related products. The Commission believes these limited purpose firms are beyond the intended scope of the risk assessment program and therefore, proposes to exempt them from the rules.

Additionally, to limit the application of the rules to all but the most significant broker-dealers, the Commission is proposing an exemption for all broker-dealers that maintain capital including subordinated debt of less than $5 million and who do not carry customer accounts.

Finally, any broker or dealer may, by application, request an individual exemption from the rules. Section 17(h) directs the Commission to consider a number of factors which have been incorporated into the draft rules. These include: The availability of information from another regulatory agency; the primary business of an associated person; the nature and extent of domestic or foreign regulation; the nature and extent of the broker-dealer's securities activities; and the amount of assets and revenues derived from and involved in United States securities activities. For example, it may be appropriate to relieve a particular broker-dealer or class of broker-dealers from the specific provisions of proposed Rule 17h–1T where comparable information is already maintained and copies thereof are filed pursuant to proposed Rule 17h2T.

Comment is requested on the proposed exemptive provisions, and specifically whether they should be expanded to include other groups of broker-dealers.

5. Special Provisions for Banks and Insurance Companies

The Commission recognizes that certain associated persons of broker-dealers are subject to the supervision of either a federal banking agency or a state insurance commissioner or similar official. To eliminate the need for banks and insurance companies to maintain two sets of records, the Commission is proposing special provisions for these entities.

[18] According to the Senate Report, "it is anticipated that the SEC would seek to exempt from the recordkeeping and reporting requirements broker-dealers whose activities are *de minimis* in nature." S. Rept. at 58.

[19] In actual practice, the Commission expects the staff to focus their efforts on the largest 50 broker-dealers.

With respect to a Material Associated Person that is subject to the supervision of a Federal banking agency, the proposed rules provide that broker-dealers may provide to the Commission copies of the reports filed with the appropriate banking regulator. The Commission notes that it has the authority to obtain more detailed call reports from the bank provided it first consults the federal banking agency to determine whether the information needed is available from such agency for other purposes, unless the Commission determines that any delay resulting from such consultation would be detrimental to the financial well-being of the broker-dealer.

The Commission is proposing similar provisions for Material Associated Persons subject to the supervision of a state insurance commissioner or similar official. Under the proposed rules, a Material Associated Person organized as a mutual insurance company would satisfy the risk assessment rules if the broker-dealer provides to the Commission copies of annual and quarterly reports filed by the parent insurance company with the state insurance regulator of the parent's domiciliary state. Additonally, mutual insurance companies would be required to maintain at the broker-dealer copies of the exhibits and the schedules to the annual and quarterly reports, together with copies of the annual and quarterly reports prepared by other affiliated insurance companies in the holding company structure. In the case of an insurance company organized as a stock company, the broker-dealer would be required to provide copies of the filings made by each Material Associated Person with the Commission under sections 13 or 15 of the Act, together with filings made under the Investment Company Act of 1940. The broker-dealer would be required to maintain, but not provide, copies of the annual and quarterly reports filed by such stock insurance companies with state insurance regulators. Additionally, where applicable, a brief reconciliation of the differences between the statutory accounting method used in the Annual and Quarterly Reports and GAAP is required.

III. Request for Comment

The Commission requests comment on the proposed rules and form. Commentators are invited to address the scope of the proposed risk assessment rules and the potential burdens imposed by them. The Commission solicits comments from broker-dealers regarding what types of risk assessment information they currently maintain.

In addition, the Commission requests comment on the approach and impact of the risk assessment rules on the broker-dealers that are owned by foreign entities and those broker-dealers owned by U.S. entities whose associated persons are regulated by U.S. regulatory entities. These firms should address the recordkeeping and reporting requirements imposed on their Material Associated Persons to enable the Commission to evaluate whether the information reported to foreign or domestic regulators would be sufficient for Commission risk assessment purposes. Specifically, the Commission requests comment on the form and content of the reports filed by associated persons of broker-dealers with other domestic or foreign regulators (such as Japan's Ministry of Finance).

The Commission also invites comment on the exemptive provisions of the proposed Rules. The Commission particularly requests comment whether a category of broker-dealers other than those proposed to be exempted in the rules should also be included.

Finally, the Commission requests comment on whether any additional requirement, rules or amendments to existing rules are appropriate to address the concerns raised by the development of complex holding company structures to which many brokers and dealers belong.

IV. Summary of Initial Regulatory Flexibility Analysis

The Commission has prepared an Initial Regulatory Flexibility Analysis ("IRFA") in accordance with 5 U.S.C. 630 concerning the proposed rules. The analysis notes that the objective of the proposed rules is to enable the Commission to obtain information concerning the risks to registered broker-dealers created by the business activities of the broker-dealer's holding company, affiliates, or subsidiaries. Smaller broker-dealers will generally not be affected by the proposed rules because the rules exempt from their requirements certain smaller entities. A copy of the IRFA may be obtained by contacting Roger G. Coffin, Division of Market Regulation, Securities and Exchange Commission, 450 Fifth Street, NW., Washington DC, 20549, (202) 272-2396.

V. Statutory Analysis

Pursuant to the Securities Exchange Act of 1934 and particularly sections 17 and 23 thereof, 15 U.S.C. 78q and 78w, the Commission proposes to add a new 240.17h-1T and 240.17h-2T, to title 17 of the Code of Federal Regulations in the manner set forth below.

List of Subjects in 17 CFR Parts 240 and 249

Reporting and recordkeeping requirements; Securities.

VI. Text of the Proposed Rules

In accordance with the foregoing, title 17, chapter II of the Code of Federal Regulations is proposed to be amended as follows:

PART 240—GENERAL RULES AND REGULATIONS, SECURITIES EXCHANGE ACT OF 1934

1. The authority citation for part 240 is amended by adding the following citation:

Authority: 15 U.S.C. 77c, 77d, 77s, 77ttt, 78c, 78d, 78i, 78j, 78l, 78m, 78n, 78o, 78p, 78s, 78w, 78x, 79q, 79t, 80a-29, 80a-37, unless otherwise noted.

* * * * *

240.17h-1T also issued under 15 U.S.C. 78q.

2. By adding § 240.17h-1T to read as follows:

§ 240.17h-1T Risk Assessment Recordkeeping Requirements for Associated Persons of Brokers and Dealers.

(a) *Requirement to maintain and preserve information.* (1) Every broker or dealer registered with the Commission pursuant to section 15 of the Act, and every municipal securities dealer registered pursuant to section 15B of the Act for which the Commission is the appropriate regulatory agency, unless exempt from the provisions of this section pursuant to paragraph (c) of this section, shall maintain and preserve the following information:

(i) An organizational chart which includes the broker or dealer and all its associated persons, together with a flow chart of the organization's consolidation process. The organizational chart shall reflect all material business lines conducted by the broker or dealer and the associated persons of the broker or dealer. Included in the organizational chart shall be a designation of which associated persons are Material Associated Persons;

(ii) Written policies, procedures, or standards concerning the credit controls and the extension of credit, including collateral procedures of each Material Associated Person;

(iii) Written policies, procedures, or standards concerning the financing of each Material Associated Person, including information regarding bank loans, repurchase agreements, stock loans, commercial paper, medium-term and long-term notes, subordinated debt

and the issuance of equity or preferred stock;

(iv) Written policies, procedures, or standards concerning the financing trading risks assumed by each Material Associated Person, including records regarding reporting responsibilities for trading activities, policies relating to restrictions or limitations on trading securities and financial instruments or products, and a description of the types of reviews conducted to monitor existing positions, and limitations or restrictions on trading activities;

(v) A description of all material pending legal or arbitration proceedings that are required to be disclosed under generally accepted accounting principles to which any Material Associated Person is a party, or of which any of its property is the subject; and

(vi) Information regarding the capital adequacy of each Material Associated Person, including a brief narrative discussion by management of the liquidity of the material assets, the structure of debt capital, and sources of alternative funding.

(2) Every broker or dealer registered with the Commission pursuant to section 15 of the Act, and every municipal securities dealer registered pursuant to section 15B of the Act for which the Commission is the appropriate regulatory agency, unless exempt from the provisions of paragraph (a) pursuant to paragraph (c) of this section, shall maintain and preserve the following records:

(i) Consolidated and consolidating balance sheets, prepared in accordance with generally accepted accounting principles, as of the end of the quarter for the broker or dealer and each Material Associated Person. For the purposes of paragraphs (a)(2) (i) and (ii) of this section, broker or dealer shall include its ultimate holding company or parent;

(ii) Quarterly consolidated and consolidating income statements and consolidated cash flow statements, prepared in accordance with generally accepted accounting principles, for the broker or dealer and each Material Associated Person;

(iii) The amount at the end of the quarter, and the highest and lowest amounts during the quarter, of the aggregate securities and commodities positions, together with limited partnership interests held by each Material Associated Person, including a separate listing of each single unhedged securities or commodities position, other than U.S. government and agency securities, that exceeds the Materiality Threshold at any time during the quarter;

(iv) The amount at the end of the quarter, and the highest and lowest amounts during the quarter, of the aggregate notional or contractual amounts of, and the gross payments owed under, any interest rate, currency, commodity or stock index swaps, or other similar financial instruments with off-balance sheet risk (as defined in Statement of Financial Accounting Standards No. 105), where the Material Associated Person incurs principal risk or otherwise operates a trading book, not including commitments made in connection with non-securities or non-financial activities, with a separate entry of each commitment where the notional or contractual amount exceeds the Materiality Threshold at any time during the quarter;

(v) The amount at the end of the quarter, and the highest and lowest amounts during the quarter, of the aggregate amount of the bridge loans and material unsecured extensions of credit with an initial or remaining maturity of less than one year by each Material Associated Person, together with the allowance for losses for such transactions, including a specific description of any extensions of credit to a single borrower exceeding the Materiality Threshold at any time during the quarter;

(vi) The amount at the end of the quarter, and the highest and lowest amounts during the quarter, of the aggregate amount of material extensions of credit, loans or advances, whether secured or unsecured, between by each Material Associated Persons to other associated persons of the broker or dealer, whether or not designated Material Associated Persons, including a specific description of any transaction that exceeds the Materiality Threshold at any time during the quarter;

(vii) The amount at the end of the quarter, and the highest and lowest amounts during the quarter, of the aggregate amount of the commercial paper, material unsecured borrowing, other material short-term financings scheduled to mature within one year, and the principal installments of long-term or medium-term debt scheduled to mature within one year;

(viii) The amount at the end of the quarter, and the highest and lowest amounts during the quarter, of the aggregate amount of material investments in equity, debt or any other commitments to invest in any affiliated companies by each Material Associated Person;

(ix) Aggregate data relating to real estate activities, including mortgage loans and investments in real estate conducted by each Material Associated Person, including:

(A) The Material Associated Person's lending and risk management policies and procedures, including minimum loan-to-appraised value ratios;

(B) The types of properties securing loans and investments and the amounts of loans and investments secured by each type;

(C) The geographic distribution, as of the end of the quarter, by amount of such loans or investments and the year such loans were made (with all loans made in the previous five years being a single category);

(D) The Material Associated Person's policy for placing loans on non-accrual status;

(E) The aggregate carrying value of mortgage loans which are not current as to interest or principal, which are in the process of foreclosure, have been restructured, or where a required payment has not been made within 60 days of the date such payment was due;

(F) The allowance for losses on mortgage loans and on investment real estate by category; and the activity in the allowance for losses account; and

(G) Information about risk concentration in the investment real estate and the mortgage loan portfolio, including, without limitation, information about risk concentration to a single borrower, location or property; and

(x) The amount at the end of the quarter and the highest and lowest amounts during the quarter of all material leases financing activities of each Material Associated Person, including a description of and a breakdown of the types of leases outstanding, together with the aggregate amounts of leases where a required payment has not been made within 60 days of the date such payment was due.

(3) The determination of whether an associated person of a broker or dealer is a Material Associated Person shall involve consideration of all aspects of the activities of, and the relationship between, both entities, including without limitation, the following factors:

(i) The legal relationship between the broker or dealer and the associated person;

(ii) The overall financing requirements of the broker or dealer and the associated person, and the degree, if any, to which the broker or dealer and the associated person are financially dependent on each other;

(iii) The degree, if any, to which the broker or dealer or its customers rely on the associated person for operational

support or services in connection with the broker's or dealer's business;

(iv) The level of risk present in the activities of the broker or dealer or of any of the broker's or dealer's associated persons; and

(v) The extent to which the associated person has the authority or the ability to cause a withdrawal of capital from the broker or dealer.

(4) For the purposes of this rule, the term financial and securities activities shall include, without limitation, principal and agency transactions involving equity or debt securities, futures, forward transactions, forward and spot market commodity transactions, commercial paper brokering, purchases of financial assets for securitization and subsequent sale as securities, merchant banking activities, bridge loan transactions, insurance transactions (other than activities that are actuarial determinations of mortality or other risks or loss reserves, or insurance underwriting activities ensuring a distribution of policy holder risk), lending, activities, real estate development, and taking principal risk or otherwise operating a trading book in connection with the exchange of interest rate or foreign currency obligations. The term financial and securities activities shall not include manufacturing, construction (other than equity investments or financing, merchandising, travel services, real estate brokerage, consumer lending, publishing, or non-securities related information processing.

(5) The information, reports and records required by the provisions of this section shall be maintained and preserved in accordance with the provisions of Rule 17a–4 (17 CFR 240.17a–4) and shall be kept for a period of not less than three years in an easily accessible place.

(6) For the purpose of this section and § 240.17h–2T, the term *Materiality Threshold* shall mean the greater of:

(i) $100 million; or

(ii) 10 percent of the broker or dealer's tentative net capital based on the most recently filed Form X–17A–5 or 10 percent of the Material Associated Person's tangible net worth, whichever is greater.

(b) *Special provisions with respect to material associated persons subject to the supervision of a Federal banking agency or an insurance commissioner or other similar official or agency of a State.* A broker or dealer shall be deemed to be in compliance with the recordkeeping requirements of paragraph (a) of this section with respect to a Material Associated Person if:

(1)(i) Such Material Associated Person is subject to examination by, and the reporting requirements of, a Federal banking agency; and

(ii) The broker or dealer maintains in accordance with the provisions of § 240.17h–2T copies of reports submitted by such Material Associated Person with the Federal banking agency pursuant to section 5211 of the Revised Statutes, section 9 of the Federal Reserve Act, section 7(a) of the Federal Deposit Insurance Act, section 10(b) of the Home Owners' Loan Act, or section 8 of the Bank Holding Company Act of 1956; or

(2)(i) If such Material Associated Person is subject to the supervision of an insurance commissioner or other similar official or agency of a state; and

(ii) In the case of a Material Associated Person organized as a stock company, the broker or dealer:

(A) Maintains in accordance with the provisions of § 240.17h–2T copies of the Annual and Quarterly Statements with Schedules and Exhibits prepared by the insurance company on forms prescribed by the insurance company's domiciliary state; and

(B) Furnishes in accordance with the provisions of § 240.17h–2T copies of the filings made by the insurance company pursuant to section 13 or 15 of the Act and the Investment Company Act of 1940; or

(iii) In the case of a Material Associated Person organized as a mutual insurance company, the broker or dealer:

(A) Maintains in accordance with the provisions of § 240.17h–2T copies of the Annual and Quarterly Statements with Schedules and Exhibits prepared by insurance companies other than the parent insurance company on forms prescribed by such insurance companies' domiciliary state; and

(B) Furnishes in accordance with the provisions of § 240.17h–2T copies of the Annual and Quarterly Statements prepared by the parent insurance company on forms prescribed by the parent insurance company's domiciliary state. The Annual Statement shall include: the classification (distribution by state) section from the schedule of real estate; distribution by state, the interest overdue (more than 90 days), in process of foreclosure, and foreclosed properties transferred to real estate during the year sections from the schedule of mortgage; and the quality and maturity distribution of all bonds at statement values and by major types of issues section from the schedule of bonds and stocks. All other Schedules and Exhibits to such Annual and Quarterly Statements shall be maintained at the broker-dealer but not filed with the Commission; and

(C) Furnishes a reconciliation of the statutory financial statements contained in the Annual and Quarterly Statements to the consolidated financial statements required by Generally Accepted Accounting Principles if such reconciliation is provided to an insurance commissioner or other similar official or agency of a state.

(iv) If the event an insurance company organized as a stock or mutual company is not required to prepare Quarterly Statements, the broker or dealer must maintain and preserve the records required by paragraph (a) of this section on a quarterly basis.

(c) *Exemptions.* (1) The Commission may, upon written application, exempt from the provisions of this section, either unconditionally or on specified terms and conditions, any broker or dealer which satisfies the Commission that it is not necessary in the public interest or for the protection of investors to subject the broker or dealer to the provisions of this section. In granting exemptions under paragraph (c)(1) of this section, the Commission shall consider, among other factors:

(i) Whether information of the type required to be maintained and preserved by this section is currently available from a supervisory agency, a state insurance commission or similar state agency, the Commodity Futures Trading Commission or a foreign regulatory agency or body;

(ii) The primary business engaged in by the associated person or persons of the broker or dealer;

(iii) The nature and extent of domestic or foreign regulation of the associated person or persons of the broker or dealer;

(iv) The nature and extent of the broker or dealer's securities activities; and

(v) The amount and proportion, on a consolidated basis, of assets of the broker or dealer and its associated persons, devoted to, and revenues derived from, activities in the United States securities markets.

(2) The provisions of this section shall not apply to any broker or dealer which is exempt from the provisions of Rule 15c3–3 of the Act pursuant to paragraph (k)(1) thereof and limits its activities to the purchase, sale and redemption of redeemable securities of registered investment companies or of interests or participations in an insurance company separate account, whether or not registered as an investment company; the solicitation of share accounts for savings and loan institutions insured by

an instrumentality of the United States; and the sale of securities for the account of a customer to obtain funds for immediate reinvestment in redeemable securities of registered investment companies.

(3) The provisions of this section shall not apply to any broker or dealer which:

(i) Maintains capital including debt subordinated in accordance with appendix D of Rule 15c3–1 of the Act of less than $5,000,000; and

(ii) Does not hold funds or securities for, or owe money or securities to, customers and does not carry the accounts of or for customers.

(iii) In calculating capital for the purposes of this paragraph, a broker or dealer shall include the equity capital and subordinated debt of any other registered brokers or dealers that are associated with the broker or dealer and are not otherwise exempt from the provisions of this section.

(4) The Commission may, upon written application by a Reporting Broker or Dealer, exempt from the provisions of this section, either unconditionally or on specified terms and conditions, any brokers or dealers associated with such Reporting Broker or Dealer. The term "Reporting Broker or Dealer" shall mean, in the case of a broker or dealer that is associated with other registered brokers or dealers, the broker or dealer which maintains the greatest amount of net capital as reported on its most recently filed Form X–17A–5. In granting exemptions under paragraph (c)(4) of this section, the Commission shall consider, among other factors, whether the records and other information required to be maintained pursuant to this section concerning the Material Associated Persons of the broker or dealer associated with the Reporting Broker or Dealer will be available to the Commission pursuant to § 240.17h.–2T

(d) Confidentiality. All information obtained by the Commission pursuant to the provisions of this section from a broker or dealer concerning a Material Associated Person shall be deemed confidential information for the purposes of section 24(b) of the Act.

3. By adding § 240.17h–2T to read as follows:

§ 240.17h–2T Risk Assessment Reporting Requirements for Brokers and Dealers.

(a) *Reporting requirements of risk assessment information required to be maintained by § 240.17h–1T.* (1) Every broker or dealer registered with the Commission pursuant to section 15 of the Act, and every municipal securities dealer registered pursuant to section 15B of the Act for which the Commission is the appropriate regulatory agency, unless exempt from this section pursuant to paragraph (b) of this section, shall file a Form 17–H within 45 calendar days after the end of each fiscal quarter. The Form 17–H for the fourth fiscal quarter shall be field within 45 calendar days of the end of the fiscal year; however, the cumulative year-end financial statements required by § 240.17h–1T may be filed separately within 90 calendar days of the end of the fiscal year.

(2) The reports required to be filed by paragraph (a)(1) of this section shall be considered filed when received at the Commission's principal office in Washington, DC.

(3) For the purposes of this section, the term Material Associated Person shall have the meaning used in § 240.17h–1T.

(b) *Exemptions.* (1) The Commission may, upon written application, exempt from the provisions of this section, either unconditionally or on specified terms and conditions, any broker or dealer that satisfies the Commission that it is not necessary in the public interest or for the protection of investors to subject the broker or dealer to the provisions of this section. In granting exemptions under this paragraph, the Commission shall consider, among other factors:

(i) Whether information of the type required to be maintained and preserved pursuant to the provisions of § 240.17h–1T is currently available from a supervisory agency, a state insurance commission or similar state agency, the Commodity Futures Trading Commission or a foreign regulatory agency or body;

(ii) The primary business engaged in by the associated person or persons of the broker or dealer;

(iii) The nature and extent of domestic or foreign regulation of the associated person or persons of the broker or dealer;

(iv) The nature and extent of the broker or dealer's securities activities; and

(v) The amount and proportion, on a consolidated basis, of assets of the broker or dealer and its associated persons devoted to, and revenues derived from, activities in the United States securities markets.

(2) The provisions of this section shall not apply to any broker or dealer which is exempt from the provisions of § 240.15c3–3 of the Act pursuant to paragraph (k)(1) thereof and limits its activities to the purchase, sale and redemption of redeemable securities of registered investment companies or of interests or participations in an insurance company separate account, whether or not registered as an investment company; the solicitation of share accounts for savings and loan institutions insured by an instrumentality of the United States; and the sale of securities for the account of a customer to obtain funds for immediate reinvestment in redeemable securities and registered investment companies.

(3) The provisions of this section shall not apply to any broker or dealer which:

(i) Maintains capital including debt subordinated in accordance with appendix D of Rule 15c3–1 of the Act of less than $5,000,000; and

(ii) Does not hold funds or securities for, or owe money or securities to, customers and does not carry the accounts of or for customers.

(iii) In calculating capital and subordinated debt for the purposes of paragraph (b) of this section, a broker or dealer shall include the equity capital and subordinated debt of any other registered brokers or dealers that are associated with the broker or dealer and are not otherwise exempt from the provisions of this section.

(4) The Commission may, upon written application by a Reporting Broker or Dealer, exempt from the provisions of this section, either unconditionally or on specified terms and conditions, any brokers or dealers associated with the Reporting Broker or Dealer. The term "Reporting Broker or Dealer" shall mean, in the case of a broker or dealer that is associated with other registered brokers or dealers, the broker or dealer which maintains the greatest amount of net capital as reported on its most recently filed Form X–17A–5. In granting exemptions under paragraph (b)(4) of this section, the Commission shall consider, among other factors, whether the records and other information required to be maintained pursuant to § 240.17h–1T concerning the Material Associated Persons of the broker or dealer associated with the Reporting Broker or Dealer will be available to the Commission pursuant to the provisions of this section.

(c) *Special provisions with respect to material associated persons subject to the supervision of a Federal banking agency or an insurance commissioner or other similar official or agency of a State.* A broker or dealer shall be deemed to be in compliance with the reporting requirements of paragraph (a) of this section with respect to a Material Associated Person if:

(1)(i) Such Material Associated Person is subject to examination by and the reporting requirements of a Federal banking agency; and

(ii) The broker or dealer furnishes in accordance with paragraph (b) of this section copies of reports filed by the Material Associated Person with the Federal banking agency pursuant to section 5211 of the Revised Statutes, section 9 of the Federal Reserve Act, section 7(a) of the Federal Deposit Insurance Act, section 10(b) of the Home Owners' Loan Act, or section 8 of the Bank Holding Company Act of 1956; or

(2)(i) If the Material Associated Person is subject to the supervision of an insurance commissioner or other similar official agency of a state; and

(ii) In the case of a Material Associated Person organized as a stock company, the broker or dealer:

(A) Maintains in accordance with the provisions of this section copies of the Annual and Quarterly Statements with Schedules and Exhibits prepared by the insurance company on forms prescribed by the insurance company's domiciliary state; and

(B) Furnishes in accordance with the provisions of this section copies of the filings made by the insurance company pursuant to sections 13 or 15 of the Act and the Investment Company Act of 1940; or

(iii) In the case of a Material Associated Person organized as a mutual insurance company, the broker or dealer:

(A) Maintains in accordance with the provisions of this section copies of the Annual and Quarterly Statements with Schedules and Exhibits prepared by insurance companies other than the parent insurance company on forms prescribed by such insurance companies' domiciliary state; and

(B) Furnishes in accordance with the provisions of this section copies of the Annual and Quarterly Statements prepared by the parent insurance company on forms prescribed by the parent insurance company's domiciliary state. The Annual Statement shall include: The classification (distribution by state) section from the schedule of real estate; distribution by state, the interest overdue (more than three months), in process of foreclosure, and foreclosed properties transferred to real estate during the year sections from the schedule of mortgages; and the quality and maturity distribution of all bonds at statement values and by major types of issues section from the schedule of bonds and stocks. All other Schedules and Exhibits to such Annual and Quarterly Statements shall be maintained at the broker-dealer but not furnished to the Commission; and

(C) Furnishes in accordance with the provisions of this section a reconciliation of the statutory financial statements contained in the Annual and Quarterly Statements to the consolidated financial statements required by GAAP if such reconciliation is provided to an insurance commissioner or other similar official or agency of a state.

(iv) In the event an insurance company organized as a stock or mutual company is not required to prepare Quarterly Statements, the broker or dealer must file with the Commission a Form 17–H in accordance with the provisions of this section on a quarterly basis.

(3) No broker or dealer shall be required to furnish to the Commission any examination report of any Federal banking agency or any supervisory recommendations or analyses contained therein with respect to a Material Associated Person that is subject to the regulation of a Federal banking agency.

(4) The furnishing of any information or documents by a broker or dealer pursuant to this section shall not constitute an admission for any purpose that a Material Associated Person is otherwise subject to the Act. Any documents or information furnished to the Commission by a broker or dealer pursuant to this rule shall not be deemed to be "filed" for the purposes of the liabilities set forth in section 18 of the Act.

(d) Confidentiality. All information obtained by the Commission pursuant to the provisions of this section from a broker or dealer concerning a Material Associated Person shall be deemed confidential information for the purposes of section 24(b) of the Act.

PART 249—FORMS, SECURITIES EXCHANGE ACT OF 1934

4. The authority citation for part 249 continues to read as follows:

Authority: 15 U.S.C. 78a, *et seq.*, unless otherwise noted.

5. By adding § 249.328T to read as follows:

§ 249.328T Form 17–H, Risk Assessment Report for Brokers and Dealers pursuant to section 17(h) of the Securities Exchange Act of 1934 and rules thereunder.

This form shall be used by brokers and dealers in reporting information to the Commission concerning certain of their associated persons pursuant to section 17(h) of the Securities Exchange Act of 1934 (15 U.S.C. § 78q(h)) and Rules 17h–1T and 17h–2T thereunder (§§ 240.17h–1T and 240.17h–2T of this chapter).

Note: Appendix A will not appear in the Code of Federal Regulations.

Appendix A

Securities and Exchange Commission, Washington, DC 20549

Form 17–H Risk Assessment Report for Brokers and Dealers

Part I

Risk Assessment Reporting Requirements for Brokers and Dealers

Report at the close of business as of the last day of the fiscal quarter.

This report is to be filed within 45 calendar days of the end of each fiscal quarter by brokers and dealers concerning each Material Associated Person (as defined in Temporary Rules 17h–1T and 17h–2T). The report for the fourth fiscal quarter shall be filed within 45 calendar days of the end of the fiscal year but the cumulative year end financial statements may be filed separately within 90 days of the end of the fiscal year.

In the event a broker or dealer is associated with one or more other registered broker or dealers, each broker or dealer is required to file a separate Form 17–H. The Commission, however, may exempt from the filing requirements all brokers or dealers associated with a broker or dealer that has been designated a "Reporting Broker or Dealer." The term "Reporting Broker or Dealer" shall have the meaning set forth in Rules 17h–1T and 17h–2T. A broker or dealer seeking designation as a Reporting Broker or Dealer must apply to the Commission for an exemption pursuant to paragraph (b)(5) of Rule 17h–2T. Pending such designation, each broker or dealer associated with the broker or dealer requesting such designation is required to file a separate Form 17–H.

Name of Reporting Broker-Dealer

SEC File No.

Name of Associated Broker-Dealer not Filing (If applicable)

Address of Principal Place of Business

Firm I.D. No.

For Period Beginning (MM/DD/YY)

And Ending (MM/DD/YY)

Name and Telephone Number of Person to Contact in Regard to This Report

Name(s) of Material Associated Persons Contained in This Report:

Attention

Intentional misstatements or omissions of facts constitute Federal Criminal Violations. See 18 U.S.C. 1001 and 15 U.S.C. 78ff(a).

Intentional misstatements or omissions of facts may also result in civil fines and other sanctions pursuant to section 20 of the Securities Exchange Act of 1934.

The person signing this report represents hereby that all information contained in this Form is true, correct and complete. It is understood that all information in this Form is considered an integral part of this Form and that the submission of any amendment represents that all unamended information remains true, correct and complete as previously filed.

Pursuant to the Securities Exchange Act of 1934, the undersigned has caused this report to be signed on its behalf in the City of _____ and State of _____ on the ____ day of ____, 19____.

_____

(Name of Broker-Dealer)

_____

(Signature and Title of Person Duly Authorized to Submit This Report)

General Information and Instructions

Note: In completing this Form, the broker-dealer should reflect its operations in the consolidated and consolidating financial statements. The broker-dealer should not include information concerning its activities in the information required by Part II of this Form if such information is filed with the Commission as part of the broker-dealer's Form X-17A-5 or Form G-405. The information required by Part II of this Form should be completed separately for each such Material Associated Person, even if the financial information contained in a broker-dealer's Form X-17A-5 includes information concerning non-broker-dealer associated persons which are designated Material Associated Persons.

Item 1. Organizational Chart Reflecting the Associated Persons and the Broker-Dealer

1. Provide an organizational chart which includes the broker-dealer and its associated persons.

2. Provide a statement of:

a. Which associated persons are Material Associated Persons, together with a brief narrative discussion about the criteria used in making the assessment as to which entities are Material Associated Persons;

b. Business line(s) conducted by each Material Associated Person; and

c. The names of the President and the Chief Financial Officer of each Material Associated Person.

3. The information provided pursuant to this Item should be included in the first Form 17-H filed by the broker-dealer and in the year end filing. Quarterly updates should be provided only where a material change in the information provided to the Commission has occurred.

Item 2. Risk Management and Other Policies

1. Provide copies of the risk management and other policies maintained by the broker-dealer pursuant to paragraphs (a)(1) (ii) through (iv) of § 240.17h-1T.

2. The information provided pursuant to this Item should be included in the first Form 17-H filed by the broker-dealer. Quarterly updates should be provided only where a material change in the information provided to the Commission has occurred.

Item 3. Legal Proceedings

1. Provide a brief description of any material pending legal or arbitration proceedings that are required to be disclosed under generally accepted accounting principles to which any Material Associated Person is a party, or of which any of its property is the subject.

2. The information provided pursuant to this Item should be included in the first Form 17-H filed with the Commission. Quarterly updates should be provided only where a material change in the information provided to the Commission has occurred.

Item 4. Capital Adequacy Information

1. Provide the information required by paragraph (a)(1)(vi) of § 240.17h-1T, including a narrative statement describing the current aggregate amounts and sources of funding for the broker or dealer and each Material Associated Person.

2. The information provided pursuant to this Item should also include a separate statement of the potential alternative borrowing sources that would be available to the broker or dealer and each Material Associated Person in the event of a major market disturbance. For the purposes of this Item, the term "major market disturbance" shall refer to events characterized by sudden and extreme fluctuations of securities prices generally, or a substantial threat thereof, or other substantial disruption of the operation of the credit markets or the domestic and international banking system. This information should include the nature and history of banking relationships; the quality, liquidity, and maturity of investment portfolios and amounts of cash on hand; normal and expected operating cash requirements; the degree of reliance on commercial paper and other short-term funding sources; the amount of unencumbered liquid securities that may be pledged to obtain secured loans; the availability of committed bank lines of credit; and whether these alternative borrowing sources are at a reasonable level in relation to short-term unsecured borrowing needs.

3. The information provided pursuant to this Item should be included in the first Form 17-H filed by the broker-dealer. Quarterly updates should be provided only where a material change in the information provided to the Commission has occurred.

Item 5. Financial Statements

Consolidated Financial Statements

1. For each quarterly and annual period required, provide consolidated and consolidating financial statements of the parent company and its subsidiaries. This information should depict the company on a total entity basis. The column headings of the consolidating financial statements should indicate the name of each Material Associated Person included in the financial statements and should include the registered broker-dealer.

2. The financial statements presented should be prepared in the form and content required by Regulation S-X, except as otherwise noted, and should include the following:

a. Balance sheet;

b. Statement of income;

c. Statement of cash flows; and

d. Notes to the financial statements.

3. Instructions to the financial statements.

a. The consolidated and consolidating financial statements should cover the company on a total entity basis to enable a reader to assess the overall financial condition of the broker-dealer and each Material Associated Person. The broker-dealer may combine associated persons that do not have significant operating activities in a separate column in the financial statements. All other associated persons should be presented separately in the consolidating financial statements. The financial statements should be prepared using the applicable guidelines governing balance sheets and income statements set forth in Regulation S-X except as otherwise noted herein.

b. The financial statements should be prepared in accordance with generally accepted accounting principles in the United States ("U.S. GAAP"). With respect to associated persons that use a comprehensive set of accounting principles other than U.S. GAAP, a reconciliation to the U.S. GAAP should be included in a note to the financial statements. The note shall indicate the comprehensive body of accounting principles noted to prepare the financial statements. The reconciliation to U.S. GAAP may, however, be limited to income from continuing operations before income taxes and the equity portion of the balance sheet. The reconciliation should provide a narrative description of the items that are treated differently by U.S. GAAP and should quantify such items if the Material Associated Person is required to prepare a quantitative comparison to U.S. GAAP under any applicable federal law.

c. The financial statements should be accompanied by the footnotes required by GAAP and any other information necessary for an understanding of the information being presented (e.g., summary of significant accounting policies). The additional footnotes required by Regulation S–X but not required by GAAP may be omitted.

d. The notes to the financial statements required by GAAP should be provided only for the consolidated financial information. Footnote disclosure which would substantially duplicate the disclosure contained in the most recent annual consolidated financial statements may be omitted from the quarterly financial statements.

e. The quarterly information should contain sufficient disclosures and footnotes to make the information presented therein not misleading and should encompass any significant changes in accounting policies or capital structure since the end of the most recent fiscal year. In this regard, the guidelines in § 210.10–01(a)(5) of Regulation S–X for interim financial statements should be followed.

f. The statement of cash flows should be provided only for the consolidated financial statements. A statement of cash flows should be provided for the quarterly consolidated financial statements, but may be abbreviated in the following manner. The category for cash provided by operations may be condensed into a single item of net cash provided by operations. The categories for investing activities and financing activities must, however, include the significant activities that have occurred during the quarter.

g. Pro forma financial information should be presented to give effect to material transactions that took place during the year or subsequent to the date of the financial information being presented, as if they took place at the beginning of the fiscal year, if such information is necessary to understand the financial statements.

h. Quarterly information may be presented on an unaudited basis. In the event that a Material Associated Person normally prepares a consolidated audited year-end financial statement, the audited consolidated financial statements should be provided and shall include a manually signed accountant's report as required by § 210.2–02(a)(2) of Regulation S–X. In all other cases, the annual consolidated and consolidating financial statements which cover the full fiscal year may be presented on an unaudited basis in the report.

i. The quarterly financial statements should include information for the current quarter and the year-to-date. Comparative financial statements for the prior fiscal year should also be provided for the consolidated financial information.

j. If financial statements that are substantially the same as those required by this Form are filed with other regulatory bodies (e.g., banking regulatory agencies, state insurance departments, foreign regulators, other divisions of the Securities and Exchange Commission, etc.) those financial statements will be considered in whole or in part to meet the requirements of this Form. For example, copies of the annual report on form 10–K and quarterly report on Form 10–Q could be provided as an exhibit to Form 17–H in order to meet the consolidated financial statement requirement. However, because the financial statements contained in Forms 10–Q and 10–K are consolidated, consolidating financial statements must still be provided separately.

Item 6. Aggregate Securities and Commodities Positions

1. Provide a separate statement of the long and short aggregate securities and commodities positions held, as of the end of the quarter, by each Material Associated Person, using a separate column for each Material Associated Person. Include a separate statement of each security or commodity position that exceeds the Materiality threshold at any time during the quarter.

2. For the purposes of this Form, the term "Materiality Threshold" shall have the meaning set forth in section 240.17h–1T.

3. If a Material Associated Person or the broker-dealer calculates its exposure or risks incurred with respect to securities or commodities positions using a delta or similar analysis, a summary of that analysis should be provided.

Item 7. Financial Instruments With Off-Balance Sheet Risk

1. Provide a statement for the financial instruments with off-balance sheet risk (as that term is used in Statement of Financial Accounting Standards No. 105) held by each Material Associated Person as of the end of the quarter. Include a separate statement of each financial instrument with off-balance sheet risk that exceeds the Materiality Threshold at any time during the quarter.

2. If a Material Associated Person or the broker-dealer calculates its exposure or risks incurred with respect to financial instruments with off-balance sheet risk using a delta or similar analysis, a summary of this analysis should be provided.

3. Provide a narrative statement of management's analysis of the potential risk to the broker-dealer caused by financial instruments with off-balance sheet risk.

Item 8. Real Estate

1. Provide a statement of the material real estate investments held by each Material Associated Person.

2. Provide management's analysis, and where applicable, the amount of: (1) The mortgage loans where a required payment has not been made within 60 days of the date such payment was due together with loans considered to be potential problems; (2) the geographic distribution and year each material loan or investment was made with all loans or investments made before 1985 aggregated as a single category; (3) individual risk concentration and credit risk; (4) the loan to value ratios for the previous five years; and (5) the allowance for losses account.

Item 9. Investments in Other Companies

1. Provide a statement of each Material Associated Person's material investments in other companies as of the end of the quarter. Include a separate statement of each individual investment that exceeds the Materiality Threshold at any time during the quarter.

2. Provide a statement of each Material Associated Person's policies with respect to investments in other companies. Include in this statement management's assessment of the

liquidity of the investments, the risks and any other relevant information bearing on the potential impact of these investments on the registered broker-dealer.

3. The policy statement provided pursuant to this Item should be included in the first Form 17–H filed by the broker-dealer. Quarterly updates should be made only where a material change in the information provided to the Commission has occurred.

Part II

Provide the following balances for each material associated person as of the end of the quarter. Balances exceeding the materiality threshold at any time during the quarter should be separately indicated under the appropriate heading.

General Instructions

1. Indicate the name of each Material Associated Person and its major business activity in the columns. Groups of related subsidiaries that are engaged in similar business activities may be combined.

2. If any of the information that is requested in this Part is provided in the financial statements provided in response to Item 5, the information need not be repeated. A note should indicate where the information can be found (for example, see footnote 4 to the consolidated financial statements).

Aggregate Securities and Commodities Positions

1. U.S. Treasury securities
2. U.S. Government agency
3. Securities issued by states and political subdivisions in the U.S.
4. Foreign securities:
   (a) Debt securities
   (b) Equity securities
5. Banker's acceptances
6. Certificates of deposit
7. Commercial paper
8. Corporate obligations
9. Stocks and warrants (other than arbitrage positions)
10. Arbitrage:
    (a) Index arbitrage and program trading
    (b) Risk arbitrage
    (c) Other arbitrage
11. Options:
    (a) Market value of put options:
        (i) Short-term options (expiration date of less than 6 months):
            (A) Listed
            (B) Unlisted
        (ii) Long-term options:
            (A) Listed
            (B) Unlisted
    (b) Market value of call options:
        (i) Short-term options:
            (A) Listed
            (B) Unlisted
        (ii) Long-term options:
            (A) Listed
            (B) Unlisted
12. Spot commodities
13. Investments with no ready market:
    (a) Equity
    (b) Debt
    (c) Other (include limited partnership interests)
14. Other securities or commodities
15. Summary of delta or similar analysis (if available)

Financial Instruments With Off-Balance Sheet Risk

1. When-issued securities:
   (a) Gross commitments to purchase
   (b) Gross commitments to sell
2. Interest rate contracts:
   (a) Futures and forward contracts (e.g., U.S. Treasury securities futures, forward rate agreements and forward agreements on U.S. government securities)
   (b) Option contracts (e.g., options on U.S. Treasury securities)
3. Written stock option contracts:
   (a) Market value of short-term contracts:
       (i) Listed
       (ii) Unlisted
   (b) Market value of long-term contracts:
       (i) Listed
       (ii) Unlisted
4. Purchased stock option contracts:
   (a) Market value of short-term contracts:
       (i) Listed
       (ii) Unlisted
   (b) Market value of long-term contracts:
       (i) Listed
       (ii) Unlisted
5. Interest rate swaps:
   (a) Total notional or contractual value of interest rate swaps
   (b) Total gross payments owed under interest rate swaps
   (c) Per counterparty breakdown where the total notional amounts of the agreements with a single counter party exceeds the Materiality Threshold
6. Foreign exchange rate swaps (e.g., cross currency swaps)
   (a) Total notional or contractual value of foreign exchange rate swaps
   (b) Total gross payments owed under exchange rate swaps
   (c) Per counterparty breakdown where the total notional amounts of the agreements with a single counterparty exceeds the Materiality Threshold
7. All other swap agreements (e.g., oil swaps):
   (a) Total notional or contractual value of all other swap agreements
   (b) Total gross payments under all other swap agreements
   (c) Per counterparty breakdown where the total notional amounts of the agreements with a single counterparty exceeds the Materiality Threshold
8. Commodities contracts:
   (a) Futures and forward contracts
   (b) Option contracts (e.g., options on individual commodities and commodities indexes):
       (i) Sold option contracts
       (ii) Purchased option contracts
9. Securities contracts:
   (a) Futures and forward contracts (e.g., stock index contracts)
   (b) Option contracts (e.g., options on individual securities and securities indexes):
       (i) Sold option contracts
       (ii) Purchased option contracts
10. Foreign exchange contracts:
    (a) Commitments to purchase foreign currencies and U.S. dollar exchange (include futures and forwards)
    (b) Option contracts (e.g., options on foreign currencies)
        (i) Written option contracts
        (ii) Purchased option contracts
11. Loan commitments and letters of credit (report only unused portions of commitments that are fee paid or otherwise legally binding):
    (a) Revolving, open-end loans secured by 1–4 family residential properties, e.g., home equity lines
    (b) Commercial real estate, construction and land development:
        (i) Commitments to fund loans secured by real estate
        (ii) Commitments to fund loans not secured by real estate
12. Securities underwriting
13. Other unused commitments
14. Total standby, commercial and similar letters of credit or guarantees
15. Securities borrowed
16. Securities lent
17. Assets sold with recourse:
    (a) 1–4 family residential mortgages
    (b) Other loans
    (c) Other assets
18. Participations in acceptances:
    (a) Conveyed to others by the Material Associated Person
    (b) Acquired by the Material Associated Person
19. Other off-balance sheet items (list below each component of this item that exceeds the Materiality Threshold)
20. Information about concentration of credit risk of all financial instruments. See the requirements of FASB Statement 105, paragraph 20.
21. Summary of delta or similar analysis (if available).

Funding Sources (Include Scheduled Maturity Date)

1. Short-term borrowings
   (a) Commercial paper
   (b) Bank loans-secured
   (c) Bank loans-unsecured
   (d) Other
   (e) Total
2. Repurchase agreements
3. Long-term debt
4. Committed lines of credit
5. Amounts borrowed under credit lines
6. Credit ratings for commercial paper
   (a) Standard & Poor's Corporation
   (b) Moody's Investor Service
   (c) Other Nationally Recognized Statistical Rating Organization

Real Estate

1. Real estate loans:
   (a) Construction and land development
   (b) Secured by farmland
   (c) Secured by 1–4 family residential properties

(d) Secured by multi-family (5 or more) residential properties
(e) Secured by non-farm non-residential properties
(f) Commercial and industrial
(g) Lease financing
(h) Other

2. Real estate investments:
(a) Construction and land development
(b) Farmland
(c) One to four family residential properties
(d) Multi-family (5 or more) residential properties
(e) Non-farm non-residential properties
(f) Commercial and industrial
(g) Lease financing
(h) Other

3. Provide a separate listing of the above information for each geographic region (e.g., northeast, southwest, etc.) and by year the loan or investment was made, with all investments or loans entered into or made before 1986 aggregated into a single category.

Investments in Associated Companies

1. Equity investments in associated companies
2. Non-equity investments in and receivables due from associated companies:
(a) Loans, advances, notes, bonds and debentures
(b) Other receivables

By the Commission.

Dated: August 30, 1991.

Margaret H. McFarland,

Deputy Secretary.

[FR Doc. 91-21323 Filed 9-5-91; 8:45 am]

BILLING CODE 8010-01-M

---

17 CFR Part 249

Release No. 34-29643; File No. S7-26-91

RIN 3235-AE49

Amendments to Form BD

AGENCY: Securities and Exchange Commission.

ACTION: Proposed form amendments.

SUMMARY: The Securities and Exchange Commission is proposing several amendments to Form BD, the uniform form for broker-dealer registration under the Securities Exchange Act of 1934. The amendments would clarify the instructions and update the disciplinary background provisions of the form to reflect recent legislative developments and to eliminate reporting of certain minor self-regulatory organization rule violations. The amendments also would revise the content and structure of the schedules to the form to provide the Commission and the self-regulatory organizations with more useful information concerning applicants and to eliminate duplication of information filed with the National Association of Securities Dealers, Inc. through the Central Registration Depository system.

DATES: October 7, 1991.

ADDRESSES: Comments should be submitted in triplicate to Jonathan G. Katz, Secretary, Securities and Exchange Commission, 450 5th Street, NW., Washington, DC 20549. All comment letters should refer to File No. S7-26-91. All comments received will be available for public inspection and copying in the Commission's Public Reference Room, 450 5th Street, NW., Washington, D.C. 20549.

FOR FURTHER INFORMATION CONTACT: Robert L.D. Colby, Chief Counsel, or Belinda Blaine, Attorney (202) 504-2418, Office of Chief Counsel, Division of Market Regulation, Securities and Exchange Commission, 450 Fifth Street, NW., Washington, DC 20549.

SUPPLEMENTARY INFORMATION: The Securities and Exchange Commission ("Commission") is proposing amendments to Form BD [17 CFR 249.501] under the Securities Exchange Act of 1934 [15 U.S.C. 78a et seq.] ("Exchange Act").

I. Background

Form BD is the form filed by an applicant to become registered with the Commission as a broker-dealer pursuant to section 15(b) of the Exchange Act.[1] The uniform form also may be used by broker-dealers to become a member of the National Association of Securities Dealers, Inc. ("NASD") and to register with forty-nine States.[2] Since the last major revisions to Form BD were adopted in 1985,[3] significant amendments to the federal securities laws were passed that not only broadened the range of offenses that result in "statutory disqualification" under the Exchange Act, but also the Commission's general sanctioning authority with respect to broker-dealers and associated persons of broker-dealers. In addition, experience with administering the form since that time has raised questions and concerns about the structure and coverage of the ownership disclosure requirements, as well as other items contained in the form. Accordingly, the Commission is proposing to amend Form BD to reflect the recent statutory changes and to clarify the disclosure required by the form.[4] The Forms Revision Committee of the North American Securities Administrators Association, Inc. ("NASAA") concurs with the proposed amendments, which are discussed below in the order that they appear on the form.

II. Proposed Amendments to Form BD

A. Instructions

The Commission is proposing to revise the definition of "control" in the instructions to Form BD. This definition is used in responding to questions in Item 6 (persons not named in Schedules A, B, or C who control the broker-dealer), Item 7 (background information on applicants and their control affiliates), Item 9 (affiliation with other securities or advisory business), and Schedules A, B, and C (control person designation).[5] Currently, the definition of "control" (used solely for purposes of Form BD) presumes that, among others, persons who directly or indirectly have the right to vote twenty-five percent or more of the voting securities, or who are entitled to receive twenty-five percent or more of the profits, have control of an applicant. The Commission is proposing to amend the current definition to indicate that persons who directly or indirectly have the right to vote, or the power to sell or direct the sale of, twenty-five percent or more of a class of voting securities are presumed to have control of an applicant. While the passive receipt of profits may not permit a person to control the management or policies of a company, the ability to effect a substantial change in a class of voting shares of a broker-dealer ordinarily would give that person significant influence.

New provisions dealing with partnerships also are proposed to be added to the definition of "control." Currently, all partners are assumed to have control of a partnership. Under the

---

[1] 15 U.S.C. 78o(b). Form BD was adopted in its current form in Securities Exchange Act Release No. 11424 (May 26, 1975), 40 FR 30634.

[2] In lieu of Form BD, New Jersey requires applicants to file for registration on Form SB-1. See 11C pt. 2, H. Sowards & N. Hirsch, Business Organizations—Blue Sky Regulation, § 8.02 (1990).

Broker-dealers register with State securities commissions and the NASD by filing Form BD with the Central Registration Depository ("CRD"). The CRD is a computerized filing and data processing system operated by the NASD that maintains registration information concerning NASD member firms and their registered personnel for access by State regulators, certain self-regulatory organizations ("SROs"), and the Commission. The CRD also contains information about regulatory and enforcement actions taken against broker-dealers and their registered personnel by these regulatory authorities.

[3] Securities Exchange Act Release No. 22468 (September 26, 1985), 50 FR 41867. Form BD was last amended in Securities Exchange Act Release No. 25806 (June 16, 1988), 53 FR 23383.

[4] Many of the matters discussed in this release also are applicable to Form ADV, 17 CFR 249.0-1, the form for registration of investment advisers under the Investment Advisers Act of 1940, 15 U.S.C. 80b-1. The Commission expects to propose similar amendments to Form ADV.

[5] See discussion at parts II.D and III of this release.

revised definition, all general partners would continue to be deemed to have control; however, only those limited or special partners that have the right to receive twenty-five percent or more of the proceeds upon dissolution, or that have contributed twenty-five percent or more of the capital, would be presumed to control the partnership.[6]

B. Item 1: Identification

Item 1 of Form BD, which requests certain identifying information, would be amended to facilitate processing of the form by the Commission, the SROs, and State securities regulators. Specifically, amended Item 1 would direct an applicant to provide any other name under which it conducts business, if different from the name of the applicant or the name under which the applicant's broker-dealer activities are conducted. In addition, other questions in Item 1 would be reworded to make them easier to understand.

C. Item 5: Successors

Item 5 currently asks whether the applicant is a successor to a registered broker-dealer.[7] The instructions to Item 5 would be expanded to make clear that an applicant is not required to continually report past successions. The instructions also would direct the applicant to describe the details of the succession on Schedule D of the form.

D. Item 7: Background Information

1. Legislative Developments

The principal changes to the body of Form BD relate to Item 7, which requests information concerning the disciplinary history of broker-dealers. Item 7 would be updated to reflect recent amendments to the Exchange Act made by the International Securities Enforcement Cooperation Act of 1990 ("ISECA")[8] and the Securities Enforcement Remedies and Penny Stock Reform Act of 1990 ("Remedies Act").[9] ISECA was passed in 1990 in order to enhance the ability of the Commission and the SROs to consider disciplinary actions taken against securities professionals by foreign regulators. Specifically, ISECA amended the Exchange Act to give the Commission the explicit authority to bar, suspend, or restrict the activities of broker-dealers and persons associated or seeking to becoming associated with a broker-dealer, based upon the findings of a foreign court or foreign securities authority.[10] For example, under section 15(b)(4)(B) of the Exchange Act, the Commission has the authority to censure, place limitations on the activities of, or suspend or revoke the registration of, a broker-dealer if it finds that such action is in the public interest and that the broker-dealer, or any person associated with the broker-dealer, has been convicted within the past ten years of certain enumerated felonies and misdemeanors.[11] ISECA amended section 15(b)(4) to add any foreign offense that is substantially equivalent to the domestic offenses listed in that section, regardless of its denomination under the laws of a foreign government. The amendments thus clarified the Commission's authority to consider foreign offenses that are not formally classified as felonies or misdemeanors in taking action against a broker-dealer.

Similarly, section 3(a)(39) of the Exchange Act provides that a person is subject to "statutory disqualification" from membership in, or association with a member of, an SRO if such person has been found to have been involved in certain illegal activities or misconduct, or has been convicted of any felony or misdemeanor enumerated in section 15(b)(4).[12] Section 3 of ISECA amended section 3(a)(39) by expanding this list to include, *inter alia*, expulsion or suspension from membership or association with a member of a foreign equivalent of an SRO, a foreign or international securities exchange, or a foreign contract market, board of trade or futures association, as well as findings by a foreign securities authority (or similar authority empowered to enforce laws relating to financial transactions) of illegal or improper conduct.[13] Finally, section 4 of ISECA added a definition of the term "foreign financial regulatory authority" to section 3(a) of the Exchange Act.[14]

In addition to ISECA, in 1990 the Congress passed the Remedies Act, which amended the Federal securities laws to confer new enforcement powers on the Commission. In general, the Remedies Act gave the Commission the authority to seek civil monetary penalties in court proceedings and to impose monetary penalties and order disgorgement in administrative proceedings. The Remedies Act also provided the Commission with both temporary and permanent cease and desist authority to prevent violations of the securities laws.[15]

In order to reflect the foregoing amendments to the Exchange Act and to obtain the information necessary to exercise its expanded authority, the Commission is proposing to expand several questions in Item 7 to include a reference to foreign courts and regulatory authorities and to Commission administrative and civil actions. For example, in addition to domestic felony convictions and certain misdemeanor convictions involving fraud and investment-related activities, Question 7.A would be amended to inquire about similar convictions entered against the applicant or its control affiliate by a foreign court. Moreover, in addition to Federal or State regulatory agencies' findings,

[6] This approach is consistent with the instructions to Schedules A and B, which currently, and as proposed, distinguish between general and limited partners. See discussion at part III.A of this release.

[7] See 17 CFR 240.15b1–3 (registration of successors to registered broker-dealers), 17 CFR 240.15Ca2–3 (registration of successors to registered government securities brokers or dealers), 17 CFR 240.15Ba2–4, and 17 CFR 240.15Ba2–6 (registration of successors to registered municipal securities dealers).

[8] Pub. L. No. 101–550, section 201–207, 104 Stat. 2713 (Nov. 15, 1990).

[9] Pub. L. No. 101–429, sections 101–102, 201–205, 401–403, 104 Stat. 931 (Oct. 15, 1990).

[10] See Securities Acts Amendments of 1990, Report to Accompany H.R. Rep. No. 240, 101st Cong., 2d Sess. 2—12 (Oct. 23, 1990) ("House Report").

[11] Among the felonies and misdemeanors listed in section 15(b)(4) of the Exchange Act, 15 U.S.C. 78*o*(b)(4), are: convictions involving the sale of securities, the taking of false oaths, the making of a false report, bribery, perjury, burglary, or conspiracy to commit any such offense; unlawful activities that arise out of the securities, banking, commodities and insurance business; larceny, theft, robbery, extortion, forgery, counterfeiting, fraudulent concealment, embezzlement, fraudulent conversion or misappropriation of funds or securities; and mail fraud.

[12] 15 U.S.C. 78c(a)(39). Section 3(a)(39) of the Exchange Act generally provides that a person is subject to a "statutory disqualification" if, among other things, that person: has been expelled or suspended from membership in an SRO or barred or suspended from association with an SRO member; has had his or her registration or association denied or suspended by the Commission or other appropriate regulatory agency; has willfully violated the Federal securities laws or aided, abetted, or counselled others to do so; is permanently or temporarily enjoined by a court from acting in any capacity within the securities industry; has willfully made or caused to be made a false or misleading statement of material fact in filings required by the SROs; or has been convicted of any felony within the past ten years. Section 3(a)(39)(F) also cross-references the activities listed in subparagraphs (B), (C), (D), (E), and (G) of section 15(b)(4) of the Exchange Act.

[13] For example, orders by an appropriate foreign financial regulatory authority denying, suspending, or revoking the authority to engage in transactions in contracts of sale of a commodity for future delivery traded on or subject to the rules of a contract market, board of trade, or foreign equivalent, will result in "statutory disqualification." ISECA also made conforming amendments to sections 15(b)(6), 15B, 15C, and 17A of the Exchange Act. See House Report at 14.

[14] 15 U.S.C. 78c(a)(51).

[15] See 15 U.S.C. 77, 78u(d), 78u–2, 78o–4, 80b–3, and 80b–9. See also The Securities Law Enforcement Remedies Act of 1990, Report to Accompany H.R. Rep. No. 616, 101st Cong. 2d Sess. 30–40 (July 23, 1990).

Question 7.D would now ask for information regarding, among other things, any findings of a foreign financial regulatory authority that the applicant or a control affiliate has: Made false statements; been involved in unethical conduct or a violation of investment regulations or statutes; been found to have been the cause of an investment-related business having its authority to do business restricted in any way; or been subject to an order suspending or revoking an investment-related business or activity, or its attorney's or accountant's license. The definition of the term "foreign financial regulatory authority" in section 3(a)(51) of the Exchange Act also would be reproduced, with minor modifications, in Item 7.[16] Question F of Item 7 would be retained to ensure that applicants report any orders of a foreign government, court, regulatory agency, or exchange relating to investments or fraud, that have not been disclosed in response to other questions in Item 7.[17]

Finally, to reflect the Commission's expanded administrative authority and civil enforcement powers under the Remedies Act, Question C of Item 7 would be amended to add paragraph (5), which asks the applicant whether a Commission or Commodity Futures Trading Commission ("CFTC") action has ever resulted in the imposition of a civil monetary penalty on the applicant or a control affiliate, or whether the Commission or the CFTC has ever ordered the applicant or a control affiliate to cease and desist from any activity.[18]

[16] Under section 3(a)(51) of the Exchange Act, 15 U.S.C. 78c(a)(51), the term "foreign financial regulatory authority" generally is defined to include any: (A) Foreign securities authority; (B) other governmental body or foreign equivalent of an SRO empowered by a foreign government to administer or enforce its laws relating to the regulation of investment or investment-related activities; or (C) membership organization, a function of which is to regulate the participation of its members in the foregoing activities.

[17] If the revisions to Item 7 are adopted as proposed, registered broker-dealers would be required to determine whether they or any control affiliate (including individuals and firms) have been the subject of any finding of a foreign court or foreign financial regulatory authority, as described above. A broker-dealer that determines that additional disclosure is required would file an amendment to Form BD pursuant to Rule 15b3-1, 17 CFR 240.15b3-1. The Commission would provide an appropriate transition period for broker-dealers to file any required amendments. See part IV of this release, *infra*.

[18] Although orders imposing monetary sanctions and cease and desist orders are not specifically included in the definition of "statutory disqualification," the amendments to Item 7 would require disclosure of this information to ensure that Form BD provides a complete description of an applicant's disciplinary history and to make this information available to state regulatory authorities for use in the registration process.

2. Minor Rule Violations

Question E(2) of Item 7 of Form BD currently requires applicants to disclose whether an SRO or commodities exchange has ever found the applicant or a control affiliate to have been involved in any violation of its rules. The Commission is proposing to amend Question E(2) to exclude SRO rule violations designated as "minor" pursuant to a plan approved by the Commission.

Rule 19d-1(c)(2) under the Exchange Act [19] allows the SROs to submit for Commission approval plans for the abbreviated reporting of minor rule violations. A rule violation may be designated as "minor" under a plan if the sanction imposed consists of a fine of $2,500 or less, and if the sanctioned person does not seek an adjudication, or otherwise exhaust his or her administrative remedies with the SRO.[20] To date, the Commission has approved minor rule violation plans submitted by the American, Boston, Cincinnati, New York, Pacific, and Philadelphia Stock Exchanges.[21] These plans generally cover procedural rules, such as rules relating to the timely reporting of audit trail information.

The amendments would eliminate reporting of minor rule violations on Form BD for several reasons. First, the requirement that broker-dealers report minor rule violations on Form BD has frustrated efforts by the SROs to enforce technical trading and reporting rules applicable to their members, who often are reluctant to report violations of such rules on Form BD. Second, as discussed above, the Commission already receives information regarding minor rule violations on a quarterly basis from SROs that have filed a plan with the Commission in accordance with Rule 19d-1 under the Exchange Act. Third, it is not essential that the Commission receive immediate notice of these *de minimis* violations, which typically result from an infraction of a procedural rule and do not involve rules governing business with the public.[22] Information that an applicant has previously been fined a minimal sum for being late in submitting audit trail information to an SRO,[23] for example, usually would not be critical to a determination of the applicant's suitability for registration as a broker-dealer. In light of these considerations, the Commission is proposing to eliminate from reporting on Form BD minor rule violations, provided that they are designated as such under an enforcement and reporting plan filed with, and approved by, the Commission pursuant to Rule 19d-1 under the Exchange Act. Question E(2) of Item 7 of Form BD would continue to require disclosure of all other SRO and commodities exchange rule violations.[24]

[19] 17 CFR 240.19d-1(c)(2).

[20] These uncontested minor disciplinary infractions are not considered "final" for purposes of section 19(d)(1) of the Exchange Act, 15 U.S.C. 78s(d)(1). By deeming such infractions as not final, the Commission permits the SROs to report the violations on a periodic, as opposed to an immediate, basis.

In contrast, SRO rule violations that result in a fine of more than $2,500, or that are contested, are considered final, and therefore must be reported to the Commission as they occur pursuant to Rule 19d-1. As the Commission stated in Securities Exchange Act Release No. 28995 (March 21, 1991), 56 FR 12967, Rule 19d-1(c) was "intended to be limited to rules which relate to areas, such as record keeping or record retention, that can be adjudicated quickly and objectively."

[21] See Securities Exchange Act Release Nos. 21918 (April 3, 1985), 50 FR 14068, 27543 (December 15, 1989), 54 FR 53223 (American Stock Exchange); Securities Exchange Act Release Nos. 26737 (April 17, 1989), 54 FR 16438-I, 29191 (May 14, 1991), 56 FR 23096 (Boston Stock Exchange); Securities Exchange Act Release No. 26053 (September 1, 1988), 53 FR 34851 (Cincinnati Stock Exchange); Securities Exchange Act Release No. 22415 (September 17, 1985), 50 FR 38600 (New York Stock Exchange, "NYSE"); Securities Exchange Act Release No. 22654 (November 21, 1985), 50 FR 48853 (Pacific Stock Exchange); and Securities Exchange Act Release No. 23491 (August 1, 1986), 51 FR 28469 (Philadelphia Stock Exchange).

The Commission also has approved the Chicago Board Options Exchange's plan to report on a quarterly basis summary fines imposed as a result of the failure to perform certain audit trail reporting duties. Securities Exchange Act Release No. 27508 (December 6, 1989), 54 FR 51096.

[22] As early as 1985, commenters suggested that disclosure of minor SRO rule violations on Form BD should not be required. See Securities Exchange Act Release No. 22468 (September 26, 1985), 50 FR 41867. At that time, the Commission stated its intention to work with NASAA and other participants in the CRD system to develop alternative means to provide information with respect to minor SRO disciplinary actions to the appropriate regulatory agencies.

In this connection, the Commission has consulted with the Forms Revision Committee of NASAA regarding the proposed amendment to Question E(2). In lieu of requiring disclosure on Form BD, the Commission has agreed to provide information regarding minor rule violations that are subject to a plan approved by the Commission directly to requesting state regulatory authorities on a periodic basis.

[23] See, *e.g.*, NYSE Rule 132, NYSE Guide (CCH) ¶ 2132 (requiring collection and submission of audit trail data). See also NYSE Rule 123A.40, NYSE Guide (CCH) ¶ 2123A (requiring Floor Official approval for election of stop orders); NYSE Rule 476A, NYSE Guide (CCH) ¶ 2476A (listing exchange rule violations that the NYSE has determined to be minor in nature); and Securities Exchange Act Release No. 28995 (March 21, 1991), 56 FR 12967 (discussing recent amendments to the NYSE's minor rule violation enforcement and reporting plan).

[24] In addition to the changes described above, the instructions to Item 7 would be amended to reference a new Schedule DRP for describing any event that results in an affirmative answer to Item 7. See discussion at part III.B.2, *infra*.

E. Item 10: Types of Business Activities

The Commission also is proposing to revise Item 10 of Form BD, which currently requires applicants for broker-dealer registration to check the appropriate boxes identifying the types of business that they are engaged in, or that they plan to engage in, excluding any business that accounts for less than ten percent of their total investment advisory or securities-related annual revenue. Item 10 would be amended to require applicants to identify all of their investment-related business activities, regardless of the percentage of total revenue, because such information often is relevant to the SROs in monitoring compliance with their examination and other requirements.[25] Moreover, the Commission believes that by requiring applicants to disclose all types of activities, Form BD will provide a more complete and accurate depiction of a broker-dealer's business. Even under this proposal, however, a broker-dealer would not be required to continually amend its Form BD to report infrequent activities, such as an occasional trade for a customer in the securities of a non-profit corporation, that are not part of the broker-dealer's regular business. The Commission requests comment on whether Item 10 specifically should exclude activities that account for a *de minimis* percentage (*e.g.*, one percent) of a broker-dealer's securities-related revenue.

Item 10 also would be revised to specify additional categories of business activities currently covered under the "other" business category in Question T. For instance, introducing broker-dealers that are members of the NASD frequently arrange for a clearing firm or other exchange member to execute transactions in exchange-listed securities for their introduced accounts As proposed, Question T of Item 10 would provide a box to be checked by non-exchange members arranging for transactions in listed securities by an exchange member. Categories for broker-dealers trading in securities for their own account (other than government or municipal securities dealers, which are covered by Questions H(1) and I, respectively), and broker-dealers engaged in private placements of securities would be added to Item 10. Finally, Question L of Item 10 would be revised to refer to broker-dealers acting as solicitors of time deposits in a financial institution, rather than merely solicitors of savings and loan accounts.

III. Proposed Amendments to the Schedules to Form BD

A. Schedules A, B, and C

Schedules A, B, and C to Form BD require disclosure of information about persons who are executive officers, directors, partners, and direct or indirect owners, of the broker-dealer.[26] Specifically, with respect to shareholders, Schedules A and B currently require disclosure of all five percent owners and all intermediate owners of the broker-dealer. The schedules also require disclosure of all five percent owners of intermediate owners and each successive five percent owner of those owners until individual owners are listed, unless the intermediate owner is a public reporting company under section 12 or 15(d) of the Exchange Act.[27] Similar provisions apply to limited partners that have contributed five percent or more of a partnership's capital.

These disclosure requirements have resulted in three problems. First, many registrants are not clear as to which owners must be disclosed, resulting in delayed registration when incomplete forms are returned. Second, the requirements have often resulted in voluminous disclosure of information that is not directly relevant to the control of the broker-dealer. Many of the persons listed by virtue of being five percent owners of a distant affiliate have a highly diluted ownership interest in the broker-dealer, may not even be aware that they have an interest, and clearly are not in a position to affect the broker-dealer's policies. Moreover, this voluminous amount of information may be difficult and expensive for registrants to compile and to keep current.

Third, these disclosure requirements create a significant impediment to registration of applicants with foreign ownership. In recent years, a growing number of broker-dealers with foreign owners have applied for registration in the United States.[28] Unlike owners of domestic companies registered under section 12 or 15 of the Exchange Act, foreign owners of broker-dealers typically are unable to take advantage of the exception from disclosure provided for public reporting companies. Moreover, in many cases, applicants do not know and cannot obtain ownership information about remote foreign owners because of their complex organizational structures.

Based on these considerations, the Commission is proposing to revise the scope of the ownership information reported on Schedules A, B, and C. The amendments are designed to focus attention on those persons that are most likely to be in a position to affect the management of the broker-dealer by including certain persons not currently required to be disclosed, and by eliminating disclosure of persons whose ownership interests are so remote they are not in a position to influence or control the broker-dealer. Any persons having actual control that are not required to be disclosed on the schedules would continue to be disclosed in response to Item 6 of Form BD.[29] In addition, the structure of the schedules would be changed to assist registration examiners in determining the chain of ownership of each applicant.

1. Schedule A: Directors, Officers, and Direct Owners

Under the revised schedules, applicants would report executive officers, directors, and five percent direct owners on Schedule A.[30] Direct owners are persons who own, beneficially own, have the right to vote, or the power to sell or direct the sale of, five percent or more of the voting

[25] For example, under the rules of the NASD, even if a broker-dealer plans to engage in only a *de minimis* business in put and call options with the public, it must demonstrate that it has at least one registered options principal that has passed the appropriate qualification examination. NASD Schedules to the By-Laws, schedule C, pt. II, section 2(f), NASD Manual (CCH) ¶ 1784.

[26] Under the present format, broker-dealers that are corporations file Schedule A, while partnerships file Schedule B, and all other applicants file Schedule C. If there are persons that "control" the applicant but that are not required to be listed on these schedules, the applicant must provide the same type of information on Schedule D with respect to those persons that would be required by Schedules A, B, or C.

[27] Ownership of a public reporting company under Section 12 or 15(d) of the Exchange Act already is disclosed pursuant to Section 13 of the Exchange Act.

[28] In 1990, foreign persons had equity interests of 25 percent or more in approximately 130 registered broker-dealers. See U.S. Department of the Treasury, National Treatment Study: Report to Congress on Foreign Government Treatment of U.S. Commercial Banking and Securities Organizations (Nov. 30, 1990), at 86. See also Internationalization of the Securities Markets: Report of the U.S. Securities and Exchange Commission to the Senate Committee on Banking, Housing and Urban Affairs and the House Committee on Energy and Commerce (July 27, 1987), at Chapter V, Appendix B–66 (remarks of James M. Davin, Vice-Chairman, NASD).

[29] Item 6 generally asks for information concerning any person not named in the schedules that directly or indirectly controls the management or policies of the applicant through an agreement or other means, or that finances the business of the applicant.

[30] All indirect owners would be reported on Schedule B, while amendments to Schedules A and B would be made on Schedule C. See discussion, *infra*.

securities of the broker-dealer.[31] Applicants that are public reporting companies under Section 12 or 15(d) of the Exchange Act, however, would not be required to list their owners on Schedule A because these owners already are disclosed pursuant to the requirements of Section 13 of the Exchange Act.[32]

For purposes of Schedule A, persons would be deemed to beneficially own securities held by certain immediate family members with whom they share the same residence. [33] Family members include a person's child, stepchild, grandchild, parent, stepparent, grandparent, spouse, sibling, mother-in-law, father-in-law, son-in-law, daughter-in-law, brother-in-law, and sister-in-law.[34] This proposed attribution rule is designed to prevent the concealment of ownership interests through the assignment of actual ownership to family members. A person also would be deemed to beneficially own securities that he or she has the right to purchase, in sixty days or less, through the exercise of an option, warrant, or right to purchase the security.[35] The Commission requests comment on whether either of these proposed attribution rules should be modified in any respect.

2. Schedule B: Indirect Owners

Applicants for registration would report indirect ownership on Schedule B; that is, they would disclose all twenty-five percent owners of direct owners, their twenty-five percent owners, and each successive twenty-five percent owner of a twenty-five percent owner, continuing up the chain of ownership until a reporting company is reached. If there is no reporting company in the chain of ownership, disclosure would stop when an individual twenty-five percent owner is listed. If there are no twenty-five percent individual owners, none would be required to be reported. The attribution rules of Schedule A discussed above also would apply to indirect owners reported on Schedule B. Moreover, in the case of an owner that is a partnership, all general partners and those limited partners that have the right to receive upon dissolution, or that have contributed, twenty-five percent or more of the capital of the partnership, must be disclosed on Schedule B.[36]

This proposal assumes that only twenty-five percent indirect owners of five percent direct owners would be in a position to influence the policies of the broker-dealer. It is consistent with the assumption underlying the form that persons who indirectly own twenty-five percent or more of a broker-dealer have the ability to "control" that broker-dealer.[37] Thus, Schedule B would not require disclosure of any person who, for example, has effective control of the applicant through twenty-four percent ownership of each of two fifty percent owners. If the combination of the two twenty-four percent ownership interests allows such person to "cause the direction of management or policies" of the broker-dealer, his or her ownership would have to be reported in response to Item 6 of Form BD. The Commission considered whether to require applicants to report indirect owners based on their diluted ownership interest, but did not propose this approach because it would require each applicant to obtain a significant amount of information about every indirect owner's holdings to determine his or her diluted ownership interest—an especially difficult task when ownership is through several indirect holdings. In any case, as discussed above, even persons who have diluted ownership interests must disclose their identity under Item 6 if they control the management or policies of the applicant.

3. Schedule C: Amendments to Schedules A and B

Under the proposed scheme, all amendments to Schedules A and B, including additions and deletions of names reported on the schedules, would be made on a separate Schedule C. Schedules A and B would be filed only with the initial application for registration.

B. Other Schedules

1. Schedule D: Continuation Page

Details of answers to items in Form BD would continue to be provided on Schedule D, with the exception of answers to Item 7 (which are provided on Schedule DRP, discussed below) and to the other schedules to the form.

2. Schedule DRP

Currently, descriptions of events resulting in an affirmative answer to Item 7 of Form BD are set forth on Schedule D. The descriptions are set out in "free text;" that is, unlike the other schedules to the form, elements of the events are not organized in a structured format. The amendments would add a new Schedule DRP that would be substantially identical to the DRP page filed by registered representatives with the NASD on the CRD system as part of Form U-4. The proposed schedule would specify the elements of each event that

[31] In the case of an applicant that is a partnership, all general partners and those limited partners that have the right to receive upon dissolution, or that have contributed, five percent or more of the partnership's capital, would be reported on Schedule A.

[32] In contrast, an applicant that is owned by a public reporting company, X, but that is not itself a reporting company, would disclose X on Schedule A, but would not disclose the owners of X (*i.e.*, the indirect owners of the applicant) on Schedule B. See the example set forth in footnote 36, *infra*.

[33] The Commission historically has deemed a person to be the beneficial owner of securities held by immediate family members sharing the same residence on the grounds that the relationship between that person and his or her relative ordinarily results in the person obtaining benefits substantially equivalent to ownership. As the Commission stated in Securities Exchange Act Release No. 26333 (December 2, 1988), 53 FR 49997, the rule "focuses on family members in the same residence, who reasonably may be assumed to act in one degree or another as an economic unit, and who may benefit from each other's enrichment."

See also Rule 16a-1(a)(2)(ii)(A), 17 CFR 240.16a-1(a)(2)(ii)(A), attributing beneficial ownership of securities held by members of a person's immediate family sharing the same household for purposes of Section 16 of the Exchange Act, 15 U.S.C. 78p; and Securities Exchange Act Release Nos. 18114 (September 24, 1981), 46 FR 48147, 27148 (August 18, 1989), 54 FR 35667, and 28869 (February 8, 1991), 56 FR 7242.

[34] See Rule 16a-1(e), defining immediate family for purposes of Section 16. Like Rule 16a-1, the Form BD attribution rule would include adoptive relationships. Under the proposed approach, if a father directly owned 4 percent of the applicant and an adult daughter sharing the same residence owned 2 percent, both would have to be named on Schedule A. If, however, the daughter was a minor child and the father exercised investment and/or voting power over the securities held in her name, the father would add the securities held by his daughter to his own holdings. The father would thus report 6 percent ownership of the applicant on Form BD.

The Commission solicits comment on whether securities held by persons other than immediate family members sharing the same residence also should be attributed for purposes of Form BD.

[35] See Rule 13d-3(d)(1) under the Exchange Act, 17 CFR 240.13d-3(d)(1), which also provides that a person is deemed to be the beneficial owner of a security for purposes of Sections 13(d) and (g) of the Exchange Act, 15 U.S.C. 78m(d) and (g), if that person has the right to acquire beneficial ownership, within sixty days, through the exercise of an option, warrant, or right to purchase the security.

[36] For example, a broker-dealer may be 50 percent owned by a reporting company, X; 40 percent owned by a non-reporting company, Y; and 10 percent owned by a partnership, Z. Each of these entities would be reported on Schedule A. The owners of X would not have to be reported on Schedule B because X is a reporting company. The 25 percent owners of Y would have to be reported on Schedule B, as would their 25 percent owners, and so on, until a reporting company or the last 25 percent holder is disclosed. The general partners of Z and all limited partners entitled to 25 percent of the proceeds on dissolution would have to be disclosed on Schedule B, as would their 25 percent owners, continuing on up the chain until a reporting company or the last 25 percent owner is listed.

[37] See the instructions to Form BD, discussed supra, at part II of this release.

must be disclosed and structure the responses to ensure that sufficient information is provided.

Schedule DRP would be integrated into the CRD system. Broker-dealers that maintain a current Form BD or Form U-4 on the CRD would not be required to complete an entire Schedule DRP, but would only fill out Item 1, which requests the name of the applicant or affiliate and certain other identifying information.[38] The identifying information will permit registration examination personnel of the Commission, the NASD, and the state securities commissions to locate the applicant in the CRD system, and thereby eliminate the need to have applicants duplicate information already captured by the CRD. For each new event resulting in an affirmative answer to Item 7 of Form BD or an update of an event that previously has been reported, the registrant would be required to file a new Schedule DRP (as is now required for Schedule D).

3. Schedule E

Schedule E to Form BD currently requires broker-dealers to disclose information regarding all business locations apart from the main office, including the location and name of the supervisor of each branch office, and any closing or opening of an office. Schedule E would continue to require the same disclosure, but would provide a more structured format for providing the required information.

IV. Timing

If the Commission adopts the proposed revisions to Form BD, registered broker-dealers would be required to file amendments to their existing Form BD to the extent that any information contained therein is inaccurate or incomplete. Thus, broker-dealers would need to review their current Form BD filings to determine whether they contain all the information required by the amendments to the form and the schedules. Moreover, registrants would file a new Schedule A and Schedule B the next time they are required to amend their ownership information. The Commission would provide an appropriate transition period for broker-dealers to file any required amendments.

V. Request for Comment

The Commission believes that the changes to Form BD described above will reduce the regulatory burden upon broker-dealers while at the same time providing more meaningful information to the Commission and other securities regulators. The Commission requests comment on whether the amendments as proposed would accomplish these goals. The Commission further requests comment on each of the specific changes to the form.

VI. Effects on Competition and Regulatory Flexibility Act Considerations

Section 23(a)(2) of the Exchange Act [39] requires the Commission, in adopting rules under the Exchange Act, to consider the anticompetitive effects of such rules, if any, and to balance any anticompetitive impact against the regulatory benefits gained in terms of furthering the purposes of the Exchange Act. The Commission is preliminarily of the view that the proposed amendments to Form BD would not result in any burden on competition that is not necessary or appropriate in furtherance of the purposes of the Exchange Act. The Commission requests comment, however, on any competitive burdens that might result from adoption of the form revisions described in this release.

In addition, the Commission has prepared an Initial Regulatory Flexibility Analysis ("IRFA"), pursuant to the requirements of the Regulatory Flexibility Act, [40] regarding the proposed revisions to Form BD. The IRFA indicates the proposed revisions could impose some additional costs on small broker-dealers. The Commission believes, however, that the amendments minimize these costs to the greatest extent possible while still fulfilling their purpose. A copy of the IRFA may be obtained from Belinda Blaine, Attorney, Office of Chief Counsel, Division of Market Regulation, Securities and Exchange Commission, 450 Fifth Street, NW., Mail Stop 5-1, Washington, DC 20549 (202) 504-2418.

VII. Statutory Basis

15 U.S.C. 78*o*, 78o-5, 78q, 78w.

List of Subjects in 17 CFR Part 249

Reporting and recordkeeping requirements, Securities, Broker-Dealers.

For the reasons set out in the preamble, the Commission is proposing to amend title 17, chapter II, part 249 of the Code of Federal Regulations as follows:

PART 249—FORMS, SECURITIES EXCHANGE ACT OF 1934

1. The authority citation for part 249 continues to read as follows:

Authority: 15 U.S.C. 78a, *et seq.*, unless otherwise noted.

§ 249.501 [Amended]

2. By revising Form BD prescribed by 17 CFR 249.501 to read as follows:

Note: Form BD does not appear in the Code of Federal Regulations. The proposed revised Form BD is attached as appendix 1 to this release.

Dated: September 3, 1991.

By the Commission.

Jonathan G. Katz,

Secretary.

Appendix 1

OMB Approval
OMB Number: 3235-0012
Expires: May 31, 1994
Estimated average burden hours per form—4.12

Form BD—Uniform Application for Broker-Dealer Registration

Instructions for Form BD

1. Updating—By law, the applicant must update the Form BD information by submitting amendments whenever the information on file changes. Complete all amended pages in full and, except for Schedule C, circle the number of the item being changed.

2. Contact Employee—The individual listed on page 1 as the contact employee must be authorized to receive all compliance information, communications and mailings and be responsible for disseminating it within the applicant's organization.

3. Format

• Attach an Execution Page (Page 1) with original manual signatures to the initial Form BD filing and each amendment to the form. Amendments to Schedules C, D and DRP also must be accompanied by an Execution Page (Page 1). Schedules A & B are amended by filing Schedule C.

• Type all information.

• Give the name of the broker-dealer and date on each page.

• Use only the Form BD and its Schedules or a reproduction of them.

4. Definitions

• Applicant—The broker-dealer applying on or amending this form.

• Control—The power, directly or indirectly, to direct the management or policies of a company, whether through ownership of securities, by contract, or otherwise. Any person that (i) is a director, general partner or officer exercising executive responsibility (or having similar status or functions); (ii) directly or indirectly has the right to vote 25% or more of a class of a voting security or has the power to sell or direct the sale of 25% or more of a class of voting securities; or (iii) in the case of a partnership, has the right to receive upon dissolution, or has contributed, 25% or more

[38] In addition to completing Item 1, broker-dealers would be required to attach a copy of the DRP page previously filed with the CRD.

[39] 15 U.S.C. 78w(a)(2).

[40] 5 U.S.C. 603.

of the capital, is presumed to control that company. (This definition is used solely for the purpose of Form BD.)

• Jurisdiction—Any non-Federal government or regulatory body in the United States, Puerto Rico or Canada.

• Person—An individual, partnership, corporation or other organization.

• Self-regulatory organization—Any national securities or commodities exchange or registered securities association, or registered clearing agency.

5. Schedules A, B and C—File Schedules A and B only with initial applications for registration. Use Schedule C to update Schedules A and B.

6. Schedule D—Schedule D provides additional space for explaining "yes" answers to Form BD items (except for Item 7), but not for continuing Schedules A, B or C. To continue Schedules A, B or C, use copies of the Schedule being continued.

7. Schedule DRP—Applicant may submit a partially completed Schedule DRP (as specified in the Schedule) only if the applicant or control affiliate for whom the Schedule is being filed has submitted a fully-completed Schedule DRP (in connection with another Form BD filing) or a DRP Page (in connection with a Form U-4 filing) relating to the occurrence of the same event to the Central Registration Depository (CRD) system of the NASD. In such cases this fully-completed Schedule DRP or DRP Page must be attached to the applicant's Schedule DRP.

8. Schedule E—Schedule E amendments reporting changes in Branch Offices may be submitted without an execution page.

9. Government Securities Activities

A. Section 15C of the Securities Exchange Act of 1934 requires sole government securities broker-dealers to register with the SEC. To do so, use Form BD and answer "yes" to Item 12 if conducting only a government securities business.

B. Broker-dealers registered or applicants applying for registration under section 15(b) or 15B of the Exchange Act that conduct (or intend to conduct) a government securities business in addition to other broker-dealer activities (if any) must file a notice on Form BD by answering "yes" to Item 13A.

C. Broker-dealers registered under section 15(b) or 15B of the Exchange Act that cease to conduct a government securities business must file notice when ceasing their activities in government securities. To do so, file an amendment to Form BD and answer "yes" to Item 13B.

10. Federal Information Law and Requirements—The Exchange Act, sections 15, 15C, 17(a) and 23(a), authorize the SEC to collect the information on this form from applicants for registration as a broker or dealer (and persons associated with applicants). The information is used for regulatory purposes, including deciding whether to grant registration. The SEC maintains files of the information on this form and makes it publicly available. Only the Social Security Number information, which aids in identifying the applicant, is voluntary.

BILLING CODE 8010-01-M

FORM BD
Page 1

Applicant:	SEC File No.: 8-	CRD No.:	DATE MM/DD/YY

Uniform Application for Broker-Dealer Registration

WARNING: Failure to keep this form current and to file accurate supplementary information on a timely basis, or the failure to keep accurate books and records or otherwise to comply with the provisions of law applying to the conduct of business as a broker-dealer would violate the Federal securities laws and the laws of the jurisdictions and may result in disciplinary, administrative, injunctive or criminal action.

INTENTIONAL MISSTATEMENTS OR OMISSIONS OF FACTS MAY CONSTITUTE CRIMINAL VIOLATIONS.

☐ Application ☐ Amendment

1. Exact name, principal business address, mailing address, if different, and telephone number of applicant:

A. Full name of applicant (if sole proprietor, state last, first and middle name):

_____

B. IRS Empl. Ident. No.:

_____

C. Name under which broker-dealer business primarily is conducted, if different:

_____

List on Schedule D any other name by which the firm conducts business.

D. If this filing makes a name change on behalf of the applicant, enter the previous name and specify whether the name change is of the applicant name (1A) or business name (1C):

_____ ☐ (1A) ☐ (1C)

E. Firm main address: (Do Not Use A P.O. Box)

_____ (Number and street) _____ (City) _____ (State) _____ (Zip Code - All Nine Digits)

F. Mailing address, if different:

_____

G. Business Telephone Number:

_____ (Area Code) _____ (Telephone Number)

H. Contact Employee:

_____ (Name and Title) _____ (Area Code) _____ (Telephone No.)

EXECUTION

For the purpose of complying with the laws of the State(s) designated in Item 2 relating to either the offer or sale of securities or commodities, the undersigned and applicant hereby certify that the applicant is in compliance with applicable state surety bonding requirements and irrevocably appoint the administrator of each of those State(s) or such other person designated by law, and the successors in such office, attorney for the applicant in said State(s) upon whom may be served any notice, process, or pleading in any action or proceeding against the applicant arising out of or in connection with the offer or sale of securities or commodities, or out of the violation or alleged violation of the laws of those State(s), and the applicant hereby consents that any such action or proceeding against the applicant may be commenced in any court of competent jurisdiction and proper venue within said State(s) by service of process upon said appointee with the same effect as if applicant were a resident in said State(s) and had lawfully been served with process in said State(s).

The applicant consents that service of any civil action brought by or notice of any proceeding before the Securities and Exchange Commission or any self-regulatory organization in connection with the applicant's broker-dealer activities, or of any application for a protective decree filed by the Securities Investor Protection Corporation, may be given by registered or certified mail or confirmed telegram to the applicant's contact employee at the main address, or mailing address if different, given in Items 1.E. and 1.F.

Answer all items.

FORM BD
Page 2

Applicant:	SEC File No.: 8-	CRD No.:	DATE MM/DD/YY

The undersigned, being first duly sworn, deposes and says that he/she has executed this form on behalf of, and with the authority of, said applicant. The undersigned and applicant represent that the information and statements contained herein, including exhibits attached hereto, and other information filed herewith, all of which are made a part hereof, are current, and complete. The undersigned and applicant further represent that to the extent any information previously submitted is not amended such information is currently accurate and complete.

_____ _____
Date Name of Applicant

By: _____ _____
Signature and Title Print Name

Subscribed and sworn before me this _____ day of _____, _____ by _____
year Notary Public

My Commission expires _____ County of _____ State of _____

This page must always be completed in full with original, manual signature and notarization. To amend, circle items being amended. Affix notary stamp or seal where applicable.

2. Indicate in the boxes below each jurisdiction in which the applicant is registered or wishes to register as a broker-dealer. If any registration, license, or membership listed is of a restricted nature, explain fully on Schedule D.

_____ Securities and Exchange Commission

SRO: ASE ☐ BSE ☐ CBOE ☐ CSE ☐ MSE ☐ NASD ☐ NYSE ☐ PHLX ☐ PSE ☐ Other (Specify)____

JURISDICTION

AL ☐	AK ☐	AZ ☐	AR ☐	CA ☐	CO ☐	CT ☐	DE ☐	DC ☐	FL ☐	GA ☐	HI ☐	ID ☐	
IL ☐	IN ☐	IA ☐	KS ☐	KY ☐	LA ☐	ME ☐	MD ☐	MA ☐	MI ☐	MN ☐	MS ☐	MO ☐	
MT ☐	NE ☐	NV ☐	NH ☐	NJ ☐	NM ☐	NY ☐	NC ☐	ND ☐	OH ☐	OK ☐	OR ☐	PA ☐	
RI ☐	SC ☐	SD ☐	TN ☐	TX ☐	UT ☐	VT ☐	VA ☐	WA ☐	WV ☐	WI ☐	WY ☐	PR ☐	

3. Indicate date and place applicant obtained its legal status (i.e., place of incorporation, where partnership agreement was filed, or where applicant entity was formed):

Date of formation _____. Place of formation _____ of:
(MM/DD/YY)

CORPORATION ☐ PARTNERSHIP ☐ SOLE PROPRIETORSHIP ☐ OTHER ☐ Specify_____

Applicant's fiscal year ends _____.
(MM/DD)

Schedule A and, if applicable, Schedule B must be completed as part of all initial applications. Amendments to these Schedules must be provided on Schedule C.

4. If applicant is a sole proprietor, state full residence address and Social Security Number.

Social Security No:_____

_____ _____ _____ _____
(Number and street) (City) (State) (Zip Code - All Nine Digits)

5. Is applicant at the time of this filing succeeding to the business of a currently registered broker-dealer? (Do not continually report past successions)..... Yes ☐ No ☐

If "yes," answer the questions below and describe the details of the succession on Schedule D.

A. Date of Succession: _____

Answer all items. Complete amended pages in full, circle amended items and file with execution page (page 1).

FORM BD Page	Applicant:	SEC File No.: 8-	CRD No.:	DATE MM/DD/YY

B. Name of Predecessor: _____

IRS Empl. Ident. No.: _____ Firm CRD No. (if any): _____ SEC File Number: 8- _____

6. Does any person not named in Item 1 or Schedules A, B, or C, directly or indirectly:

A. Control the management or policies of applicant through agreement or otherwise? See instructions for Definition of Control. (If yes, state on Schedule D the exact name of each person and describe the basis for the person's control.) ..... Yes ☐ No ☐

B. Wholly or partially finance the business of applicant in any manner other than by: (1) a public offering of securities made pursuant to the Securities Act of 1933; (2) credit extended in the ordinary course of business by suppliers, banks and others; or a satisfactory subordination agreement, as defined in Rule 15c3-1 under the Securities Exchange Act of 1934 (17 CFR 240.15c3-1)? ..... Yes ☐ No ☐

If "yes", state on Schedule D the exact name of each person and describe the agreement or arrangement through which such financing is made available, including the amount thereof.

7. Background Information

Use Schedule DRP for providing details to "yes" answers to the questions in Item 7.

Definitions:

- Control affiliate - A person named in Items 1.A., 6. or in either Schedules A, B or C as control persons or any other individual or organization that directly or indirectly controls, is under common control with, or is controlled by the applicant, including any current employee except one performing only clerical, administrative, support or similar functions, or who, regardless of title, perform no executive duties or have no senior policy making authority.
- Investment or investment-related - Pertaining to securities, commodities, banking, insurance, or real estate (including, but not limited to, acting as or being associated with a broker-dealer, municipal securities dealer, government securities broker or dealer, investment company, investment adviser, futures sponsor, bank, or savings and loan association).
- Involved - Doing an act or aiding, abetting, counseling, commanding, inducing, conspiring with or failing reasonably to supervise another in doing an act.
- Foreign financial regulatory authority - Includes (A) a foreign securities authority; (B) other governmental body or foreign equivalent of a self-regulatory organization empowered by a foreign government to administer or enforce its laws relating to the regulation of investment or investment-related activities; or (C) a membership organization, a function of which is to regulate the participation of its members in the activities listed above.

A. In the past ten years has the applicant or a control affiliate been convicted of or pleaded guilty or nolo contendere ("no contest") in a domestic or foreign court to:

(1) a felony or misdemeanor involving:

- investment or an investment-related business
- fraud, false statements, or omissions
- wrongful taking of property, or
- bribery, forgery, counterfeiting or extortion? ..... Yes ☐ No ☐

(2) any other felony? ..... Yes ☐ No ☐

B. Has any domestic or foreign court:

(1) in the past ten years, enjoined the applicant or a control affiliate in connection with any investment-related activity? ..... Yes ☐ No ☐

(2) ever found that the applicant or a control affiliate was involved in a violation of investment-related statutes or regulations? ..... Yes ☐ No ☐

C. Has the U.S. Securities and Exchange Commission or the Commodity Futures Trading Commission ever:

(1) found the applicant or a control affiliate to have made a false statement or omission? ..... Yes ☐ No ☐

(2) found the applicant or a control affiliate to have been involved in a violation of its regulations or statutes? ..... Yes ☐ No ☐

(3) found the applicant or a control affiliate to have been a cause of an investment-related business having its authorization to do business denied, suspended, revoked, or restricted? ..... Yes ☐ No ☐

Answer all items. Complete amended pages in full, circle amended items and file with execution page (page 1).

FORM BD
Page 4

Applicant:	SEC File No.: 8-	CRD No.:	DATE MM/DD/YY

(4) entered an order denying, suspending or revoking the applicant's or a control affiliate's registration or otherwise disciplined it by restricting its activities?..... Yes ☐ No ☐

(5) imposed a civil money penalty on the applicant or a control affiliate, or ordered the applicant or a control affiliate to cease and desist from any activity?..... Yes ☐ No ☐

D. Has any other federal regulatory agency, any state regulatory agency, or foreign financial regulatory authority:

(1) ever found the applicant or a control affiliate to have made a false statement or omission or been dishonest, unfair, or unethical?..... Yes ☐ No ☐

(2) ever found the applicant or a control affiliate to have been involved in a violation of investment regulations or statutes?..... Yes ☐ No ☐

(3) ever found the applicant or a control affiliate to have been a cause of an investment-related business having its authorization to do business denied, suspended, revoked, or restricted?..... Yes ☐ No ☐

(4) in the past ten years, entered an order against the applicant or a control affiliate in connection with an investment-related activity?..... Yes ☐ No ☐

(5) ever denied, suspended, or revoked the applicant's or a control affiliate's registration or license, prevented it from associating with an investment-related business, or otherwise disciplined it by restricting its activities?..... Yes ☐ No ☐

(6) ever revoked or suspended the applicant's or a control affiliate's license as an attorney or accountant?..... Yes ☐ No ☐

E. Has any self-regulatory organization or commodities exchange ever:

(1) found the applicant or a control affiliate to have made a false statement or omission?..... Yes ☐ No ☐

(2) found the applicant or a control affiliate to have been involved in a violation of its rules (other than a violation designated as a "minor rule violation" under a plan approved by the U.S. Securities and Exchange Commission)?..... Yes ☐ No ☐

(3) found the applicant or a control affiliate to have been the cause of an investment-related business having its authorization to do business denied, suspended, revoked, or restricted?..... Yes ☐ No ☐

(4) disciplined the applicant or a control affiliate by expelling or suspending it from membership, by barring or suspending its association with other members, or by otherwise restricting its activities?... Yes ☐ No ☐

F. Has any foreign government, court, regulatory agency, or exchange ever entered an order against the applicant or a control affiliate related to investments or fraud other than as reported in Items 7.A., B., or D.? ..... Yes ☐ No ☐

G. Is the applicant or a control affiliate now the subject of any proceeding that could result in a "yes" answer to parts A-F of this item?..... Yes ☐ No ☐

H. Has a bonding company denied, paid out on, or revoked a bond for the applicant?..... Yes ☐ No ☐

I. Does the applicant have any unsatisfied judgments or liens against it?..... Yes ☐ No ☐

J. Has the applicant or a control affiliate of the applicant ever been a securities firm or a control affiliate of a securities firm that has been declared bankrupt, had a trustee appointed under the Securities Investor Protection Act, or had a direct payment procedure begun?..... Yes ☐ No ☐

8. Does applicant:

A. Have any arrangement with any other person, firm or organization under which:

(1) Any of the accounts or records of applicant are kept or maintained by such person, firm, or organization?..... Yes ☐ No ☐

(2) The funds or securities of applicant or of any of its customers are held or maintained by such other person, firm or organization (other than a bank or satisfactory control location as defined in paragraph (c) of Rule 15c3-3 under the Securities Exchange Act of 1934, 17 CFR 240.15c3-3)..... Yes ☐ No ☐

Answer all items. Complete amended pages in full, circle amended items and file with execution page (page 1).

FORM BD
Page 5

Applicant:	SEC File No.: 8-	CRD No.:	DATE MM/DD/YY

B. Have any arrangements with any other broker or dealer under which applicant refers or introduces customers to such other broker or dealer? ..... Yes ☐ No ☐

If the answer to any subsection of Item 8 is "yes," furnish full details on Schedule D as to each such arrangement, including the full name and principal business address of the other person, firm, or organization, and a summary of each such arrangement. Clearly label the subsection of Item 8 to which the details of each arrangement are provided.

9. Directly or indirectly, does applicant control, is applicant controlled by, or is applicant under common control with any partnership, corporation, or other organization engaged in the securities or investment advisory business? ..... Yes ☐ No ☐

If the answer to Item 9 is "yes," state full name and principal business address of such partnership, corporation, or other organization and describe the nature of control on Schedule D. If any of the control affiliates are registered through the CRD system, indicate the Firm CRD number to aid in identification. See instructions for Definition of Control.

10. Check types of business engaged in (or to be engaged in, if not yet active) by applicant.

A. Exchange member engaged in exchange commission business other than floor activities ..... ☐ EMC

B. Exchange member engaged in floor activities ..... ☐ EMF

C. Broker or dealer making inter-dealer markets in corporate securities over-the-counter ..... ☐ IDM

D. Broker or dealer retailing corporate securities over-the-counter ..... ☐ BDR

E. Underwriter or selling group participant (corporate securities other than mutual funds) ..... ☐ USG

F. Mutual fund underwriter or sponsor ..... ☐ MFU

G. Mutual fund retailer ..... ☐ MFR

H. 1. U.S. government securities dealer ..... ☐ GSD

2. U.S. government securities broker ..... ☐ GSB

I. Municipal securities dealer ..... ☐ MSD

J. Municipal securities broker ..... ☐ MSB

K. Broker or dealer selling variable life insurance or annuities ..... ☐ VLA

L. Solicitor of time deposits in a financial institution ..... ☐ SSL

M. Real estate syndicator ..... ☐ RES

N. Broker or dealer selling oil and gas interests ..... ☐ OGI

O. Put and call broker or dealer or option writer ..... ☐ PCB

P. Broker or dealer selling securities of only one issuer or associated issuers (other than mutual funds) ..... ☐ BIA

Q. Broker or dealer selling securities of non-profit organizations (e.g. churches, hospitals) ..... ☐ NPB

R. Investment advisory services ..... ☐ IAD

S. Broker or dealer selling tax shelters or limited partnerships ..... ☐ TAP

T. Non-exchange member arranging for transactions in listed securities by exchange member ..... ☐ NEX

U. Trading securities for own account ..... ☐ TRA

V. Private placements of securities ..... ☐ PLA

W. Other (give details on Schedule D) ..... ☐ OTH

11. A. Does applicant effect transactions in commodity futures, commodities or commodity options as a broker for others or dealer for its own account? ..... Yes ☐ No ☐

B. Does applicant engage in any other non-securities business? (If "yes," describe each other business briefly on Schedule D.) ..... Yes ☐ No ☐

Answer all items. Complete amended pages in full, circle amended items and file with execution page (page 1).

Applicant:	SEC File No.: 8-	CRD No.:	DATE MM/DD/YY

12. Is applicant applying for or continuing an existing registration solely as a government securities broker or dealer pursuant to Section 15C of the Securities Exchange Act of 1934?..... Yes ☐ No ☐

13. Notice of Government Securities Activities

A. Is applicant registered (or registering) as a broker-dealer under Section 15(b) of the Securities Exchange Act of 1934 and also acting or intending to act as a government securities broker or dealer in addition to other broker-dealer activities?..... Yes ☐ No ☐

(Do not answer "yes" if applicant answered "yes" to Question 12.)

B. Is applicant ceasing its activities as a government securities broker or dealer?..... Yes ☐ No ☐

(Do not answer "yes" unless previously answered "yes" to Question 13A.)

Answer all items. Complete amended pages in full, circle amended items and file with execution page (page 1).

-37-

Schedule A of FORM BD Direct Owners and Executive Officers

Applicant:	SEC File No.: 8-	CRD No.:	DATE MM/DD/YY

(Answer for Form BD Item 3)

1. Use Schedule A only in new applications to provide information on the direct owners and executive officers of the applicant. Use Schedule B in new applications to provide information on indirect owners. File all amendments on Schedule C. Complete each column.

2. List below the names of:

   (a) each Chief Executive Officer, Chief Financial Officer, Chief Operations Officer, Chief Legal Officer, Chief Compliance Officer, Director, and individual with similar status or functions;

   (b) in the case of an applicant that is a corporation, each shareholder that directly owns 5% or more of a class of a voting security of the applicant, unless the applicant is a public reporting company (a company subject to Sections 12 or 15(d) of the Securities Exchange Act of 1934);

   Direct owners include any person that owns, beneficially owns, has the right to vote, or has the power to sell or direct the sale of, 5% or more of a class of a voting security of the applicant. For purposes of this Schedule, a person beneficially owns any securities (i) owned by his/her child, stepchild, grandchild, parent, stepparent, grandparent, spouse, sibling, mother-in-law, father-in-law, son-in-law, daughter-in-law, brother-in-law, or sister-in-law, sharing the same residence; or (ii) that he/she has the right to acquire, within 60 days, through the exercise of any option, warrant or right to purchase the security.

   (c) in the case of an applicant that is a partnership, all general partners and those limited and special partners that have the right to receive upon dissolution, or have contributed, 5% or more of the partnership's capital; and

   (d) in the case of an owner that is a trust, the trust and each trustee.

3. Complete the "Status" column by entering board/management titles; status as partner, trustee, sole proprietor, or shareholder; and for shareholders, the class of securities owned (if more than one is issued).

4. (a) In the "Control Person" column, enter "yes" if person has "control" as defined in the instructions to this Form, and enter "no" if the person does not have control. Note that under this definition most executive officers and all 25% owners, general partners, and trustees would be "control persons."

   (b) In the "PR" column, enter "PR" if the owner is a public reporting company under Sections 12 or 15(d) of the Securities Exchange Act of 1934.

5. Ownership codes are: NA - less than 5% | A - 5% but less than 10% | B - 10% but less than 25% | C - 25% but less than 50% | D - 50% but less than 75% | E - 75% or more

FULL LEGAL NAME (Individuals: Last Name, First Name, Middle Name)	Date Title or Status Acquired MM/YY	Title or Status	Ownership Code	Control Person	PR	CRD No. If None: S.S. No., IRS Tax No. or Employer ID.	Official Use Only

-38-

Schedule B of FORM BD Indirect Owners	Applicant:	SEC File No.: 8-	CRD No.:	DATE MM/DD/YY

(Answer for Form BD Item 3)

1. Use Schedule B only in new applications to provide information on the indirect owners of the applicant. Use Schedule A in new applications to provide information on direct owners. File all amendments on Schedule C. Complete each column.

2. With respect to each owner listed on Schedule A, (except individual owners), list below:

   (a) in the case of an owner that is a corporation, each of its shareholders that beneficially owns, has the right to vote, or has the power to sell or direct the sale of, 25% or more of a class of a voting security of that corporation;

   For purpose of this Schedule, a person beneficially owns any securities (i) owned by his/her child, stepchild, grandchild, parent, stepparent, grandparent, spouse, sibling, mother-in-law, father-in-law, son-in-law, daughter-in-law, brother-in-law, or sister-in-law, sharing the same residence; or (ii) that he/she has the right to acquire, within 60 days, through the exercise of any option, warrant or right to purchase the security.

   (b) in the case of an owner that is a partnership, all its general partners and those limited and special partners that have the right to receive upon dissolution, or have contributed, 25% or more of the partnership's capital; and

   (c) in the case of an owner that is a trust, each trustee.

3. Continue up the chain of ownership listing all 25% owners at each level. Once a public reporting company (a company subject to Sections 12 or 15(d) of the Securities Exchange Act of 1934) is reached, no ownership information further up the chain of ownership need be given.

4. Complete the "Status" column by entering status as partner, trustee, shareholder, etc, and if shareholder, class of securities owned (if more than one).

5. (a) In the "Control Person" column, enter "yes" if the person has "control" as defined in the instructions to this Form, and enter "no" if the person does not have control.

   (b) In the "PR" column, enter "PR" if the owner is a public reporting company under Sections 12 or 15(d) of the Securities Exchange Act of 1934.

6. Ownership codes are: C - 25% but less than 50% D - 50% but less than 75% E - 75% or more

FULL LEGAL NAME (Individuals: Last Name, First Name, Middle Name)	Entity in Which Interest is Owned	Status	Ownership Code	Control Person	PR	CRD No. If None: S.S. No., IRS Tax No. or Employer ID	Official Use Only

-39-

Schedule C of FORM BD Amendments to Schedules A & B	Applicant:	SEC File No.: 8-	CRD No.:	DATE MM/DD/YY

(Amendments to answers for Form BD Item 3)

1. This Schedule C is used to amend Schedules A and B of Form BD. Complete each column. File with a completed Execution Page (Page 1).

2. In the "Type of Amd." column, indicate "A" (addition), "D" (deletion), or "C" (change in information about the same person).

3. Ownership Codes are: NA - less than 5% A - 5% but less than 10% B - 10% but less than 25% C - 25% but less than 50% D - 50% but less than 75% E - 75% or more

4. List below all changes to Schedule A:

FULL LEGAL NAME (Individuals: Last Name, First Name, Middle Name)	Type of Amd.	Date Title or Status Acquired MM/YY	Title or Status	Ownership Code	Control Person	PR	CRD No. If None: S.S. No., IRS Tax No. or Employer ID.	Official Use Only

5. List below all changes to Schedule B:

FULL LEGAL NAME (Individuals: Last Name, First Name, Middle Name)	Type of Amd.	Entity in Which Interest is Owned	Status	Ownership Code	Control Person	PR	CRD No. If None: S.S. No., IRS Tax No. or Employer ID.	Official Use Only

-40-

Schedule D of FORM BD Continuation Sheet	Applicant:	SEC File No.: 8-	CRD No.:	DATE MM/DD/YY

INSTRUCTIONS

- o Use this Schedule D to report details of answers to Form BD Items except Item 7 and the other Schedules.
- o File with a completed Execution Page (Page 1).
- o Use this Schedule D only to report new information or changes/updates to previously submitted details. Do not repeat previously submitted information.
- o Provide complete and concise information.

Item of Form	Answer

-41-

Schedule DRP of FORM BD Page 1	Applicant:	SEC File No.: 8-	CRD No.:	DATE MM/DD/YY

(Answer for Form BD Item 7)

INSTRUCTIONS

- This Schedule DRP must be filed upon occurrence of an event reportable under Item 7 of Form BD.
- Use a separate schedule for each event or proceeding. An event or proceeding may be reported for more than one person or entity using one Schedule DRP. File with a completed Execution Page (Page 1).
- One event may result in more than one "yes" answer in Item 7; if so, use only one schedule to report all information relating to the single event.
- Provide clear and concise answers for each item on this schedule.
- It is not a requirement that documents be provided for each event or proceeding. Should they be provided, they will not be accepted as disclosure in lieu of answering the questions on this schedule.

1. A. The person(s) or entity(ies) for whom this Schedule DRP is being filed is (are): (check only one box)

☐ The Applicant ☐ One or more control affiliates ☐ Applicant and one or more control affiliates

If this Schedule DRP is being filed for a control affiliate, give the full name of the control affiliate below (for individuals, Last name, First name, Middle name). If the control affiliate is registered with the CRD, provide the CRD number. If not, indicate "non-registered" in the space for the CRD Number.

Control Affiliate Name: _____ CRD No: _____

Control Affiliate Name: _____ CRD No: _____

Control Affiliate Name: _____ CRD No: _____

Control Affiliate Name: _____ CRD No: _____

B. If the control affiliate is registered with the CRD, has the control affiliate submitted a DRP page or Schedule DRP to the CRD system for the event? ..... Yes ☐ No ☐

If answer is no, then complete Items 2-9 below. If the answer is yes, no other information on this schedule must be provided, but a copy of the DRP page or Schedule DRP submission must be attached.

NOTE: The completion of this form does not relieve the control affiliate of its obligation to update its CRD records.

2. This Schedule DRP relates to the following questions in Item 7.

7A(1) ☐	7C(3) ☐	7D(4) ☐	7E(4) ☐
7A(2) ☐	7C(4) ☐	7D(5) ☐	7F ☐
7B(1) ☐	7C(5) ☐	7D(6) ☐	7G ☐
7B(2) ☐	7D(1) ☐	7E(1) ☐	7H ☐
7C(1) ☐	7D(2) ☐	7E(2) ☐	7I ☐
7C(2) ☐	7D(3) ☐	7E(3) ☐	7J ☐

3. Is this schedule being filed to change or update any information regarding a previously reported event or proceeding? ..... Yes ☐ No ☐

4. Who initiated this event or proceeding? (Enter name of firm, regulator, customer, etc.)

_____

5. What type of event or proceeding was this? (i.e., Civil, Administrative, Criminal, Arbitration)

_____

-42-

Schedule DRP of FORM BD Page 2	Applicant:	SEC File No.: 8-	CRD No.:	DATE MM/DD/YY

6. On what date was the event or proceeding initiated?

7. Identify the docket or case number of the event or proceeding (if any).

8. What were the allegations against the applicant and/or control affiliate? (Include amounts of actual or alleged damages or claims.)

9. A. What is the current status of the event or proceeding? _____

B. On what date was this status reached? _____

C. What was the result? (Include felony/misdemeanor, a description of the penalties, amount of fine, payment or settlement; terms of the disposition, length of suspension or restriction, etc.)

10. You may provide a brief summary of this event or proceeding (Optional). (Your information must fit within the space provided.)

-43-

Schedule E of FORM BD	Applicant:	SEC File No.: 8-	CRD No.:	DATE MM/DD/YY

Use this schedule to open (ADD) or close (DELETE) business locations of applicant, and to update (CHANGE) information relating to existing applicant business locations other than the main office.

Instructions for Items 1-7. Complete Item 1-7 for each entry except where noted.

Item 1. Applicant must check one box only. For initial filings all business locations would be checked ADD. Failure to check this item will result in an incomplete filing and a delay in processing.

Item 2. Complete for all entries. The address must be the physical location. Post Office box only designations are not sufficient and cannot be processed.

Item 3. Complete for all entries. Give Supervisor name (last, first, middle) as it appears on most recent Form U-4 filing.

Item 4. Complete ONLY when applicant changes the address for an existing business location.

Item 5. Complete for all entries (if available).

Item 6. Complete for all entries. Will represent opening, closing, or effective date of change for that business location. Schedule E form date will be substituted for the effective date if Item 6 is incomplete or missing.

Item 7. Complete for all entries. Check YES or NO to denote whether location will be an Office of Supervisory Jurisdiction (OSJ) as defined in the NASD Rules of Fair Practice, Article III Section 27.

Item 8. Complete branch I.d. or billing code for all entries.

Repeat Items 1-8 for each business location submitted on this filing.

---

1. ___ADD ___DELETE ___CHANGE
(you must check one box)

Complete Item 4 only if you are changing the address for this office.

2. _____
Street
_____
P.O. Box (if appropriate), Suite, Floor
_____
City, State, Zip Code + 4

4. _____
Street
_____
P.O. Box (if appropriate), Suite, Floor
_____
City, State, Zip Code + 4

7. OSJ
Y___ or N___

8. I.D. or Code
_____

3. _____
Supervisor - Last, First, Middle Name

5. _____
CRD Number of Supervisor

6. _____/_____/_____
Effective date (mm/dd/yr)

---

1. ___ADD ___DELETE ___CHANGE
(you must check one box)

Complete Item 4 only if you are changing the address for this office.

2. _____
Street
_____
P.O. Box (if appropriate), Suite, Floor
_____
City, State, Zip Code + 4

4. _____
Street
_____
P.O. Box (if appropriate), Suite, Floor
_____
City, State, Zip Code + 4

7. OSJ
Y___ or N___

8. I.D. or Code
_____

3. _____
Supervisor - Last, First, Middle Name

5. _____
CRD Number of Supervisor

6. _____/_____/_____
Effective date (mm/dd/yr)

---

1. ___ADD ___DELETE ___CHANGE
(you must check one box)

Complete Item 4 only if you are changing the address for this office.

2. _____
Street
_____
P.O. Box (if appropriate), Suite, Floor
_____
City, State, Zip Code + 4

4. _____
Street
_____
P.O. Box (if appropriate), Suite, Floor
_____
City, State, Zip Code + 4

7. OSJ
Y___ or N___

8. I.D. or Code
_____

3. _____
Supervisor - Last, First, Middle Name

5. _____
CRD Number of Supervisor

6. _____/_____/_____
Effective date (mm/dd/yr)

---

1. ___ADD ___DELETE ___CHANGE
(you must check one box)

Complete Item 4 only if you are changing the address for this office.

2. _____
Street
_____
P.O. Box (if appropriate), Suite, Floor
_____
City, State, Zip Code + 4

4. _____
Street
_____
P.O. Box (if appropriate), Suite, Floor
_____
City, State, Zip Code + 4

7. OSJ
Y___ or N___

8. I.D. or Code
_____

3. _____
Supervisor - Last, First, Middle Name

5. _____
CRD Number of Supervisor

6. _____/_____/_____
Effective date (mm/dd/yr)

[FR Doc. 91-21411 Filed 9-5-91; 8:45 am]
BILLING CODE 8010-01-C

DEPARTMENT OF JUSTICE

28 CFR Part 16

[AAG/A Order No. 51-91]

Exemption of Records System Under the Privacy Act

AGENCY: Department of Justice.

ACTION: Proposed rule.

SUMMARY: The Department of Justice proposes to exempt the U.S. Marshals Service Prisoner Transportation System, JUSTICE/USM-003 from the provisions of 5 U.S.C. 552a(c) (3) and (4), (d), (e) (1), (2), (5), and (g). The exemptions are necessary to protect the security of prisoners, informants, and law enforcement personnel; and to prevent a serious threat to law enforcement communications systems.

DATE: All comments must be received by October 7, 1991.

ADDRESS: All comments should be addressed to Patricia E. Neely, Staff Assistant, Systems Policy Staff, Justice Management Division, Department of Justice, Washington, DC 20530 (Room 5031, CAB Building).

FOR FURTHER INFORMATION CONTACT: Patricia E. Neely (202) 514-6329.

SUPPLEMENTARY INFORMATION: The U.S. Marshals Service Prisoner Transportation System, JUSTICE/USM-003, is being published in full text in the Notice section of today's **Federal Register**.

This order relates to individuals rather than small business entities. Nevertheless, pursuant to the requirements of the Regulatory Flexibility Act, 5 U.S.C. 610-612, it is hereby stated that the order will not have a "significant economic impact on a substantial number of small entities."

List of Subjects in 28 CFR Part 16

Administrative practice and procedure, Courts, Freedom of Information, Privacy, Sunshine Act.

The authority for this proposed rule is 5 U.S.C. 552a. Accordingly, pursuant to the authority vested in the Attorney General by 5 U.S.C. 552a and delegated to me by Attorney General Order 793-78, it is proposed to amend 28 CFR 16.101 as set forth below.

Dated: August 26, 1991.

Harry H. Flickinger,

Assistant Attorney General for Administration.

PART 16—[AMENDED]

(1) The authority for part 16 continues to read as follows:

Authority: 5 U.S.C. 301, 552, 552a, 552b(g), 553; 18 U.S.C. 4203(a)(1); 28 U.S.C. 509, 510, 534; 31 U.S.C. 3717, 9701.

(2) It is proposed to amend 28 CFR 16.101 by redesignating paragraph (o) as paragraph (q) and by adding new paragraphs (o) and (p).

§ 16.101 Exemption of U.S. Marshals Service (USMS) Systems—Limited Access, as indicated.

* * * * *

(o) The following system of records is exempt from 5 U.S.C. 552a(c) (3) and (4), (d), (e) (1), (2), (5), and (g):

(1) U.S. Marshals Service Prisoner Transportation System (JUSTICE/USM-003).

These exemptions apply only to the extent that information in this system is subject to exemption pursuant to 5 U.S.C. 552a(j)(2).

(p) Exemptions from the particular subsections are justified for the following reasons:

(1) From subsection (c)(3) where the release of the disclosure accounting for the disclosures made pursuant to subsection (b) of the Act would reveal a source who furnished information to the Government in confidence.

(2) From subsection (c)(4) to the extent that the system is exempt from subsection (d).

(3) From subsection (d) because access to records would reveal the names and other information pertaining to prisoners, including sensitive security information such as the identities and locations of confidential sources, *e.g.*, informants and protected witnesses; and disclose access codes, data entry codes and message routing symbols used in law enforcement communications systems to schedule and effect prisoner movements. Thus, such a compromise of law enforcement communications systems would subject law enforcement personnel and other prisoners to harassment and possible danger, and present a serious threat to law enforcement activities. To permit amendment of the records would interfere with ongoing criminal law enforcement and impose an impossible administrative burden by requiring that information affecting the prisoner's security classification be continuously reinvestigated when contested by the prisoner, or by anyone on his behalf.

(4) From subsections (e) (1) and (5) because the security classification of prisoners is based upon information collected during official criminal investigations; and, in the interest of ensuring safe and secure prisoner movements it may be necessary to retain information the relevance, necessity, accuracy, timeliness, and completeness of which cannot be readily established, but which may subsequently prove useful in establishing patterns of criminal activity or avoidance, and thus be essential to assigning an appropriate security classification to the prisoner. The restrictions of subsections (e) (1) and (5) would impede the information collection responsibilities of the USMS, and the lack of all available information could result in death or serious injury to USMS and other law enforcement personnel, prisoners in custody, and members of the public.

(5) From subsection (e)(2) because the requirement to collect information from the subject individual would impede the information collection responsibilities of the USMS in that the USMS is often dependent upon sources other than the subject individual for verification of information pertaining to security risks posed by the individual prisoner.

(6) From subsection (g) to the extent that the system is exempt from subsection (d).

* * * * *

[FR Doc. 91-21387 Filed 9-5-91; 8:45 am]

BILLING CODE 4410-01-M

DEPARTMENT OF THE INTERIOR

Office of Surface Mining Reclamation and Enforcement

30 CFR Parts 701, 780, 784, 816, and 817

RIN 1029-AB40

Surface Coal Mining and Reclamation Operations; Permanent Regulatory Program; Performance Standards; Permanent and Temporary Impoundments

AGENCY: Office of Surface Mining Reclamation and Enforcement, Interior.

ACTION: Reopening of the public comment period.

SUMMARY: The Office of Surface Mining Reclamation and Enforcement (OSM) published a proposed rule in the **Federal Register** of Friday, June 28, 1991 (56 FR 29774). The proposed rule would govern the design, construction and inspection requirements of permanent and temporary impoundments at surface and underground mining operations.

In response to several requests for more time to submit public comments on this rule, the comment period on these issues will be reopened. The original comment period announced in the **Federal Register** on June 28, 1991 (56 FR 29774), closed on August 27, 1991. The

new comment period will extend until close of business on October 7, 1991.

DATES: The public comment period will close on October 7, 1991.

ADDRESSES: Written comments on the issues addressed at 56 FR 29774 may be hand-delivered to the Administrative Record, Office of Surface Mining, Room 5131, 1100 L Street, NW., Washington, DC; or mailed to the Administrative Record, Office of Surface Mining, Room 5131-L, 1951 Constitution Avenue NW., Washington, DC 20240.

FOR FURTHER INFORMATION CONTACT: Robert A. Wiles, P.E., Office of Surface Mining Reclamation and Enforcement, U.S. Department of the Interior, 1951 Constitution Avenue NW., Washington, DC 20240; Telephone: 202-343-1502 (Commercial or FTS).

Dated: August 30, 1991.

Brent Wahlquist,

Assistant Director, Reclamation and Regulatory Policy.

[FR Doc. 91-21361 Filed 9-5-91; 8:45 am]

BILLING CODE 4310-05-M

---

30 CFR Part 901

Alabama Regulatory Program; Regulatory Reform; Ownership and Control

AGENCY: Office of Surface Mining Reclamation and Enforcement (OSM), Interior.

ACTION: Proposed rule.

SUMMARY: OSM is announcing the receipt of proposed amendments to the Alabama regulatory program (hereinafter referred to as the Alabama program) which were submitted on August 1, 1991, under the Surface Mining Control and Reclamation Act of 1977 (SMCRA). The proposed amendments relate to ownership and control, and a variety of issues which were addressed in the proposed amendment package of November 22, 1989, but which were not approved by OSM (56 FR 4542).

This notice sets forth the times and locations that the Alabama program and proposed amendments to that program are available for public inspection, the comment period during which interested persons may submit written comments on the proposed amendments, and the procedures that will be followed regarding the public hearings, if one is requested.

DATES: Written comments must be received on or before 4:00 p.m. on October 7, 1991. If requested, a public hearing on the proposed amendments will be held at 1 p.m. on October 1, 1991. Requests to present oral testimony at the hearing must be received on or before 4 p.m. on September 23, 1991.

ADDRESSES: Written comments should be mailed or hand delivered to Mr. Jesse Jackson, Jr., Director, Birmingham Field Office, at the address listed below. Copies of the Alabama program, the proposed amendments, and all written comments received in response to this notice will be available for public review at the addresses listed below during normal business hours. Monday through Friday, excluding holidays. Each requestor may receive, free of charge, one copy of the proposed amendments by contacting OSM's Birmingham Field Office:

Birmingham Field Office, 135 Gemini Circle, suite 215, Birmingham, Alabama 35209, Telephone: (205) 290-7283.

Alabama Surface Mining Commission, First Federal Bank Building, 2nd Floor, 1811 Second Avenue, Jasper, Alabama 35501, Telephone: (205) 221-4130.

FOR FURTHER INFORMATION CONTACT: Mr. Jesse Jackson, Jr., Director, Birmingham Field Office, (205) 290-7283.

SUPPLEMENTARY INFORMATION:

I. Background

On May 20, 1982, The Secretary of the Interior conditionally approved the Alabama program. Information regarding general background on the Alabama program, including the Secretary's findings, the disposition of comments, and a detailed explanation of the conditions of approval of the Alabama program can be found in the May 20, 1982 **Federal Register** (47 FR 22030). Subsequent actions taken with regard to Alabama's program and program amendments can be found in 30 CFR 901.10, 901.15 and 901.30.

II. Discussion of Amendments

Pursuant to the Federal regulations at 30 CFR 732.17, OSM informed Alabama on May 11, 1989, that a number of the Alabama regulations relating to ownership and control were less effective than or inconsistent with the Federal requirements as revised on March 2, 1989 (54 FR 8982). On July 5, 1989, an amendment package relative to ownership and control was informally submitted by the State. The formal submittal was delayed until August 1, 1991, largely due to legal challenges to the Federal rules and the pending review of the informal amendments.

In addition, the August 1, 1991, formal submittal addresses conditions which OSM placed on the approval of February 5, 1991 (56 FR 4552). This partial approval and conditions pertain to amendments to the State program which resulted from changes in the Federal regulation (30 CFR, Chapter VII) between May 20, 1982 and June 15, 1988 (from the date of conditional approval of the Alabama program through those Federal regulation changes covered by Regulation Reform Review II). Some of the above mentioned conditions were satisfied by the State's formal submittal of July 16, 1990 (which dealt for the most part with Regulation Reform Review III). The references pertaining to these previously satisfied conditions are not listed below since they are listed and discussed in the final rule of July 3, 1991 (56 FR 30502), which announces approval (with exceptions) of the amendments contained in the submittal of July 16, 1990.

The Alabama Surface Mining commission proposes the following rule making actions:

Rule No. and Title: [Intended Action]

880-X-2A-.06 Definition [Amended].

880-X-6A-.06 License Application Requirements [Amended].

880-X-8D-.05 Identification of Interests [Amended].

880-X-8D-.06 Compliance Information.

880-X-8G-.05 Identification of Interests [Amended].

880-X-8G-.06 Compliance Information [Amended].

880-X-8K-.10 Review of Permit Applications [Amended].

880-X-8K-.11 Permit Conditions [Amended].

880-X-8K-.17 Improvidently Issued Permits: General Procedures [New Rule].

880-X-8K-.18 Improvidently Issued Permits: Rescission.

Procedures [New Rule]

880-X-10C-.40 Coal Mine Waste: Refuse Piles [Amended].

880-X-10C-.45 Disposal of Noncoal Mine Wastes [Amended].

880-X-10C-.62 Revegetation: Standards for Success [Amended].

880-X-10D-.56 Revegetation: Standards for Success [Amended].

880-X-11C-.02 Cessation Orders [Amended].

III. Public Comment Procedure

In accordance with the provision of 30 CFR 732.17(h), OSM is now seeking comments on whether the amendments proposed by Alabama satisfy the applicable program approval criteria of 30 CFR 732.15. If the amendments are deemed adequate, they will become part of the Alabama program.

Written Comments

Written comments should be specific, pertain only to the issues proposed in this rulemaking, and include explanations in support of the commenter's recommendations. Comment received after the time indicated under "DATES" or at locations other than the Birmingham Field Office will not necessarily be considered in the final rulemaking or included in the Administrative Records.

Public Hearing

Persons wishing to comment at the public hearing should contact the person listed under "**FOR FURTHER INFORMATION CONTACT.**" by 4:00 P.M. September 23, 1991. If no one requests an opportunity to comment at a public hearing, the hearing will not be held.

Filing of a written statement at the time of the hearing is requested as it will greatly assist the transcriber. Submission of written statements in advance of the hearing will allow OSM officials to prepare adequate responses and appropriate questions.

The public hearing will continue on the specified date until all persons scheduled to comment have been heard. Persons in the audience who have not been scheduled to comment, and who wish to do so, will be heard following those scheduled. The hearing will end after all persons scheduled to comment and persons present in the audience who wish to comment have been heard.

Public Hearing

If only one person requests an opportunity to comment at a hearing, a public meeting, rather than a public hearing, may be held. Persons wishing to meet with OSM representatives to discuss the proposed amendments may request a meeting at the OSM office listed under "**ADDRESSES**" by contacting the person listed under "**FOR FURTHER INFORMATION CONTACT.**" All such meetings will be open to the public and, if possible, notices of meetings will be posted at the locations listed under "**ADDRESSES**". A written summary of each meeting will be made a part of the Administrative Record.

List of Subjects in 30 CFR Part 901

Intergovernmental relations, Surface mining, Underground mining.

Dated: August 26, 1991.

Carl C. Close,

Assistant Director, Eastern Support Center.

[FR Doc. 91-21360 Filed 9-5-91; 8:45 am]

BILLING CODE 4310-05-M

DEPARTMENT OF TRANSPORTATION

Coast Guard

33 CFR Part 157

[CGD 90-051]

RIN 2115-AD61

Double Hull Standards for Tank Vessels Carrying Oil

AGENCY: Coast Guard, DOT.

ACTION: Proposed rule; reopening of comment period.

SUMMARY: The Coast Guard is reopening the public comment period for this rulemaking. This action is being taken to provide the public an opportunity to review and comment on relevant documents that were not available during part or all of the initial comment period for this rulemaking. These documents could have a substantive impact on this major and significant rule. In addition, the Coast Guard is clarifying the application of double hull requirements to lightering vessels.

DATES: Comments must be received on or before October 7, 1991.

ADDRESSES: Comments may be mailed to the Executive Secretary, Marine Safety Council (G-LRA-2/3406) (CGD 90-051), U.S. Coast Guard Headquarters, 2100 Second Street, SW., Washington, DC 20593-0001, or may be delivered to room 3406 at the above address between 8 a.m. and 3 p.m., Monday through Friday, except Federal holidays. The telephone number is (202) 267-1477. The Executive Secretary maintains the public docket for this rulemaking. Comments will become part of this docket and will be available for inspection or copying at room 3406, U.S. Coast Guard Headquarters.

A copy of the National Academy of Sciences' report, "Tanker Spills: Prevention by Design" is available for inspection in the public docket. Additional copies of this report may be obtained from the National Academy Press, 2101 Constitution Avenue, NW., Post Office Box 285, Washington, DC 20055, telephone (800) 624-6242 or (202) 334-3313.

FOR FURTHER INFORMATION CONTACT: Mr. Stephen M. Shapiro, Merchant Vessel Inspection and Documentation Division (G-MVA-2), telephone (202) 267-1181.

SUPPLEMENTARY INFORMATION:

Request for Comments

The Coast Guard encourages interested persons to submit written data, views, or arguments. Persons submitting comments should include their name and address, identify this rulemaking (CGD 90-051), the specific section of the proposal or related documents to which each comment applies, and give a reason for each comment. Persons wanting acknowledgment of receipt of comments should enclose a stamped, self-addressed postcard or envelope.

The Coast Guard will consider all comments currently in the public docket and all additional comments that are received during this comment period. The proposal may be changed in view of the comments.

The Coast Guard plans no public hearing. However, persons may request a public hearing by writing to the Marine Safety Council at the address under "**ADDRESSES.**" If it is determined that the opportunity to make oral presentations will aid this rulemaking, the Coast Guard will hold a public hearing at a time and place announced by a later notice in the **Federal Register.**

Background and Discussion

On December 5, 1990, the Coast Guard published a Notice of Proposed Rulemaking (55 FR 50192) to implement the double hull requirements in section 4115 of the Oil Pollution Act of 1990, "the Act," (Pub. L. 101-380). This proposal included standards to define the double hulls that the Act requires to be fitted on all tank vessels built or converted under contracts awarded on or after June 30, 1990. The Act requires tank vessels built or converted under earlier contracts to be retrofitted with double hulls according to a timetable that begins in 1995 and ends in 2015. Subsequent to the Coast Guard's proposal, there have been two events which could have a substantive impact on this major and significant rulemaking and, therefore, merit this further opportunity for public comment.

On February 25, 1991, the National Academy of Sciences released the pre-publication edition of its report "Tanker Spills: Prevention by Design." Copies of the hard-bound published report have recently become available from the National Academy Press, which may be contacted at the address and telephone numbers listed under "**ADDRESSES.**"

On July 5, 1991, the Marine Environment Protection Committee (MEPC) of the International Maritime Organization approved Regulation 13F (MEPC 31/WP.11, Annex 2) as an amendment to Annex I of the International Convention for the Prevention of Pollution from Ships (MARPOL 73/78), which will provide an international standard double hull construction. Regulation 13G, which

includes a provision addressing existing double hull tank vessels (MEPC 31/WP.11, Annex 3, paragraph 2), was also approved. For the convenience of the reader, Regulation 13F and Regulation 13G (paragraph 2 only) are reprinted as an appendix at the end of this notice.

In addition to prescribing dimensions for protective spaces, these MARPOL amendments include requirements for the size of suction wells, the locations of segregated ballast tanks needed to meet the capacity required by Regulation 13 of MARPOL 73/78, Annex I, and the location of cargo and ballast piping. Except as noted in the following two paragraphs, the Coast Guard will consider these amendments when developing the final rule for double hulls on oceangoing and inland tank vessels. Public comments on these MARPOL amendments are encouraged, particularly on those relating to the above issues.

The United States delegation to the MEPC reserved its position on provisions within the MARPOL amendments that are inconsistent with the Oil Pollution Act of 1990. Although Regulation 13F is reprinted in its entirety in the appendix to this notice, the Coast Guard will not consider the inconsistent provisions when developing the final rule. Specifically, those provisions which are inconsistent set a minimum size for vessels which will be required to have full double hulls (the Act prescribes no minimum), and approve intermediate oil-tight decks (mid-deck) as an alternative (13F(4)) to double bottom tanks (the Acts does not authorize the Coast Guard to adopt alternative concepts for vessels over 5,000 gross tons).

The approved MARPOL amendments also include provisions to upgrade damage stability requirements. Since stability requirements, particularly for tank ships, were not discussed in the Notice of Proposed Rulemaking, those provisions will be addressed in a future notice in the **Federal Register.**

The Coast Guard is also clarifying the application of double hull requirements to lightering vessels. The Act allows single hull tank vessels that may no longer operate in U.S. waters (upon reaching the age for double hull retrofit or retirement specified in the Act), to enter U.S. waters to offload cargo destined for the United States, subject to certain conditions. The preamble to the proposed rule implied that such vessels will be permitted to offload until January 1, 2015 either within approved lightering zones less than 60 miles offshore, or at any location greater than 60 miles offshore. This is incorrect. The Act permits such vessels to offload until January 1, 2015 only in approved lightering zones located more than 60 miles offshore. This was correctly reflected in the text of the proposed amendment to 33 CFR 157.08.

Appendix—MARPOL 73/78 Amendments for the Prevention of Oil Pollution in the Event of Collision or Stranding

The following amendments were reported by the Marine Environment Protection Committee's Working Group on Prevention of Oil Pollution on July 4, 1991 (MEPC 31/WP.11) and approved by the Committee on July 5, 1991: (Note: Bracketed items [ ] are tentative and will receive further consideration.)

Regulation 13F of Annex I to MARPOL 73/78

(1) This regulation shall apply to oil tankers of 600 DWT and above:

(a) For which the building contract is placed on or after [ ], or

(b) In the absence of a building contract, the keels of which are laid or which are at a similar stage of construction on or after [ ], or

(c) The delivery of which are or after [ ], or

(d) Which had undergone a major conversion:

(i) for which the contract is placed after [ ]; or

(ii) In the absence of a contract, the construction work of which is begun after [ ]; or

(iii) Which is completed after [ ].

(2) Notwithstanding the provisions of regulation 13E, every oil tanker of 3,000 DWT and above shall, in lieu of regulation 13E and subject to the provisions of paragraphs (4) and (5), comply with the requirements of paragraph (3) and in addition the requirements of paragraph (6).

(3) The entire cargo tank length shall be protected by ballast tanks or spaces other than oil tanks as follows:

(a) Wing tanks or spaces: Wing tanks or spaces shall extend for the full depth of the ship's side or from the deck, disregarding a rounded gunwhale, to the top of the double bottom and shall be arranged such that the cargo tanks are located inboard of the side shell, nowhere less than the value w which is measured at right angles to the side shell, as specified below:

(i) Ships of 5,000 DWT and above: $w = 0.5 + (DWT/20{,}000)$ metres; or, $w = 2.0$ m., whichever is the lesser. The minimum value of $w = 1.0$ m.

(ii) Ships of less than 5,000 DWT: $w = 0.4 + (0.24)(DWT/2{,}000)$ metres.

(b) Double bottom tanks or spaces: The vertical depth of each double bottom tank or space measured from the moulded line of the bottom shell plating at the centre line shall be not less than the value h specified below:

(i) Ships of 5,000 DWT and above: $h = B/15$; or, $h = 2.0$ metres, whichever is the lesser. The minimum value of $h = 1.0$ metre.

(ii) Ships of less than 5,000 DWT: $h = B/15$. The minimum value of $h = 0.76$ metres.

Suction wells in cargo tanks may protrude into the vertical depth h provided that such wells are as small as practicable and the protrusion below the inner bottom plating does not exceed 50% of the vertical depth h.

(c) The aggregate capacity of wing tanks, double bottom tanks, forepeak tanks and afterpeak tanks shall not be less than the capacity of segregated ballast tanks necessary to meet the requirements of regulation 13. Wing tanks, spaces and double bottom tanks used to meet the requirements of regulation 13 shall be located as uniformly as practicable along the cargo tank length.

(d) Ballast piping shall not pass through cargo tanks and cargo piping shall not pass through ballast tanks.

(4) Double bottom tanks or spaces are required by paragraph (3)(b) may be dispensed with, provided that the design of the tanker is such that the cargo and vapor pressure exerted on the bottom shell plating forming a single boundary between the cargo and the sea does not exceed the external hydrostatic water pressure, as expressed by the following formula:

$(f)(hc)(Rc) + (10)(dP) <$ or $= (dn)(Rs)$;

where:

hc = height of cargo above the bottom shell plating in metres;

Rc = maximum cargo density in tons/cubic metre;

dn = minimum operating draught for partial loading conditions in metres;

Rs = density of sea water in tons/cubic metre;

dP = maximum set pressure of pressure/vacuum value provided for the cargo tank in bars; and,

f = safety factor, [$f = 1.1$ in general].

(b) Any horizontal partition necessary to fulfil the above requirements shall be located at a height of not less than B/6 or 6 metres, whichever is the lesser, above the base line.

(c) The location of the cargo tanks or spaces shall be as defined in paragraph (3)(a), except that below a vertical depth calculated in accordance with paragraph (3)(b) the cargo tank walls may be vertical down to the bottom plating.

(d) The details of the design of the oil tanker shall be approved by the Administration.

(5) Other methods of design and construction of oil tankers than those prescribed in paragraph (4) may also be accepted as alternative to the requirements prescribed in paragraph (3), provided that such alternative provides the same level of protection against oil outflow in the event of collisions or strandings and is approved [by the Marine Environment Protection Committee] based on guidelines for such approval developed by the Organization.

(6) Oil tankers of [20,000] DWT and above shall comply with the damage stability criteria prescribed in regulation 25, with the assumed damages prescribed in regulation 22 and, in addition, the following assumed raking bottom damage:

(a) Longitudinal extent: For [0.75] L from the forward perpendicular.

(b) Transverse extent: [B/3] anywhere in the bottom.

(c) Vertical extent: Breach of the outer hull.

(7) Oil tankers of less than 3,000 DWT shall:

(a) Be fitted with a double bottom complying with (3)(b)(ii), provided that in no case shall *h* be less than 0.76 metres; and

(b) Be provided with cargo tanks so arranged that the capacity of each cargo tank does not exceed 700 cubic metres.

(8) Oil shall not be carried in any space extending forward of a collision bulkhead located in accordance with regulation II-1/11 of the International Convention for the Safety of Life at Sea, 1974 as amended. An oil tanker that is not required to have a collision bulkhead in accordance with that regulation shall not carry oil in any space extending forward of the transverse plane perpendicular to the centreline that is located as if it were a collision bulkhead located in accordance with that regulation.

(9) In approving the design and construction of oil tankers to be built in accordance with the provisions of this regulation, Administrations shall have due regard to the general safety aspects including the need for the maintenance and inspections of wing and double bottom tanks or spaces.

Regulation 13G of Annex I to MARPOL 73/78

(2) Oil tankers which comply with regulation 13F(3) (a) and (b) except that the required minimum distances between the cargo tank boundaries and the ship side and the bottom plating are not in all respects met, may be accepted by the Administration for further operation for an unlimited period of time provided said distances are at least as specified in the IBC Code for type 2 cargo tank location.

Dated: August 19, 1991.

A.E. Henn,

Rear Admiral, U.S. Coast Guard, Chief, Office of Marine Safety, Security and Environmental Protection.

[FR Doc. 91-21367 Filed 9-5-91; 8:45 am]

BILLING CODE 4910-14-M

FEDERAL COMMUNICATIONS COMMISSION

47 CFR Part 69

[CC Docket No. 91-141; DA 91-1080; RM 7249; ENF-87-14]

Expanded Interconnection With Local Telephone Company Facilities

AGENCY: Federal Communications Commission.

ACTION: Proposed rule; Extension of time to file reply comments.

SUMMARY: The Commission grants in part a motion filed by the National Telephone Cooperative Association requesting additional time to file reply comments in this proceeding. Finding that the record is especially large, and Commission decisionmaking would be best served by giving parties additional time in which to address the complex issues discussed in the comments, the Commission extends the time for filing reply comments from September 5, 1991, to September 20, 1991.

DATES: Reply comments are to be filed by September 20, 1991.

ADDRESSES: Federal Communications Commission, 1919 M Street, NW., Washington, DC 20554.

FOR FURTHER INFORMATION CONTACT: Sara F. Seidman, Policy and Program Planning Division, Common Carrier Bureau, (202) 632-6363.

SUPPLEMENTARY INFORMATION: In this proceeding, a notice of proposed rulemaking and notice of inquiry was published in the **Federal Register** on July 26, 1991, 56 FR 34159 (1991). An Erratum was released by the Commission on August 6, 1991, DA 91-970.

Order

Adopted: August 22, 1991.

Released: August 23, 1991.

Reply Comment Date: September 20, 1991.

By the Deputy Chief (Policy), Common Carrier Bureau:

1. On August 14, 1991, the National Telephone Cooperative Association (NTCA) filed a motion requesting additional time in which to file reply comments in the above-captioned proceeding.[1] Reply comments currently are due on September 5, 1991, and NTCA requests an extension of time until September 30, 1991. In support of its request, NTCA states that the interests of its small member telephone companies are at stake in this proceeding, and that it plans to consult with its membership about issues raised in the first round of comments at a regularly scheduled meeting on September 15, 1991. Accordingly, NTCA says that it needs additional time to prepare its reply comments.

2. USTA supports NTCA's Motion, and notes that many of its members are Tier 1 carriers that will be directly affected by any new Commission rules in this proceeding. USTA states that the number of comments filed in the initial round was great and the issues raised are complex and significant, and intertwine with other proceedings. USTA states that "(t)he Commission should not risk the targeting of future policy decisions to meet the public interest on the basis of an inability to develop a full and responsive record due to time constraints."

3. IDCMA also supports NTCA's extension request. It notes that numerous initial comments were filed, many of which are voluminous and raise a myriad of issues which could be addressed in reply comments. IDCMA says that parties would be hard pressed to adequately respond to these significant factual and policy issues in the time allotted.

4. MFS states that it neither supports nor opposes NTCA's request, and urges the Commission to avoid any unnecessary delay in this proceeding. MFS acknowledges, however, that the number of comments filed may make it difficult for parties to adhere to the original September 5 deadline. Therefore, MFS states that it will not oppose an extension of time to file reply comments until September 20, 1991.

5. We grant an extension of time in which to file reply comments in this proceeding. Although Commission policy is that extensions of time will not be routinely granted,[2] we find that the record is especially large, and Commission decision-making will be best served by giving parties additional time in which to address the complex issues discussed in the comments. We agree with MFS, however, that unnecessary delay should be avoided and, therefore, we are only extending the time for filing reply comments to September 20, 1991.

6. Accordingly, it is ordered, That the NTCA Motion for Extension of Time is granted to the extent indicated herein, and that the time for all parties in the above-captioned proceeding to file reply comments is extended to September 20, 1991.

[1] Motion for Extension of Time of the National Telephone Cooperative Association, filed August 14, 1991 (Motion). Three parties, Metropolitan Fiber Systems, Inc. (MFS), the United States Telephone Association (USTA), and the Independent Data Communications Manufacturers Association, Inc. (IDCMA), filed comments on the Motion.

[2] 47 CFR 1.46(a).

Federal Communications Commission.

Carl D. Lawson,

Deputy Chief, Policy, Common Carrier Bureau.

[FR Doc. 91-21302 Filed 9-5-91; 8:45 am]

BILLING CODE 6712-01-M

---

47 CFR Part 73

[MM Docket No. 91-253, RM-6882]

Radio Broadcasting Services; Tioga, PA

AGENCY: Federal Communications Commission.

ACTION: Proposed rule.

SUMMARY: The Commission requests comments on a petition filed by Anita L. Clark seeking the substitution of Channel 234B1 for Channel 234A or Channel 227A at Tioga, Pennsylvania, and the modification of her construction permit for Station WPHD to specify operation on the higher powered channel. Channel 234B1 can be allotted to Tioga in compliance with the Commission's minimum distance separation requirements with a site restriction of 10.5 kilometers (6.5 miles) southwest to avoid short-spacings to Stations WLVY, Channel 232A, Elmira, New York, and WYYY, Channel 233B, Syracuse, New York, and to the pending proposal to allot Channel 233A to Dushore, Pennsylvania (MM Docket No. 89-299). The coordinates for this allotment are North Latitude 41-51-46 and West Longitude 77-14-41. Canadian concurrence is required since Tioga is located within 320 kilometers (200 miles) of the U.S.-Canadian border. See Supplementary Information, *infra.*

DATES: Comments must be filed on or before October 21, 1991, and reply comments on or before November 5, 1991.

ADDRESSES: Federal Communications Commission, Washington, DC 20554. In addition to filing comments with the FCC, interested parties should serve the petitioner, or its counsel or consultant, as follows: Anita L. Clark, 44 Pine Street, Waverly, New York 14892 (Petitioner) and Kevin M. Fitzgerald, P.O. Box 663, Great Bend, Pennsylvania 18821 (Consultant to petitioner).

FOR FURTHER INFORMATION CONTACT: Leslie K. Shapiro, Mass Media Bureau, (202) 634-6530.

SUPPLEMENTARY INFORMATION: This is a synopsis of the Commission's Notice of Proposed Rule Making, MM Docket No. 91-253, adopted August 21, 1991, and released August 30, 1991. The full text of this Commission decision is available for inspection and copying during normal business hours in the FCC Dockets Branch (room 230), 1919 M Street, NW., Washington, DC. The complete text of this decision may also be purchased from the Commission's copy contractor, Downtown Copy Center, (202) 452-1422, 1714 21st Street, NW., Washington, DC 20036.

Station WPHD's construction permit was modified from Channel 227A to Channel 234A pursuant to the Report and Order in MM Docket 88-496. *See* 56 FR 32976, July 18, 1991. However, a petition for reconsideration of the decision in MM Docket 88-496 is pending. Thus, should the decision in MM Docket 88-496 be upheld, we will not accept competing expressions of interest in use of Channel 234B1 at Tioga or require the petitioner to demonstrate the availability of an additional equivalent class channel for use by such parties. Should the decision in MM Docket 88-496 be modified in such a manner as to make the Tioga channel substitution unnecessary, competing expressions of interest will be accepted and Station WPHD's construction permit may not be modified unless the petitioner demonstrates the availability of an additional equivalent class channel for use by such parties. See § 1.420(g) of the Commission's Rules.

Provisions of the Regulatory Flexibility Act of 1980 do not apply to this proceeding.

Members of the public should note that from the time a Notice of Proposed Rule Making is issued until the matter is no longer subject to Commission consideration or court review, all *ex parte* contacts are prohibited in Commission proceedings, such as this one, which involve channel allotments. See 47 CFR 1.204(b) for rules governing permissible *ex parte* contacts.

For information regarding proper filing procedures for comments, see 47 CFR 1.415 and 1.420.

List of Subjects in 47 CFR Part 73

Radio Broadcasting.

Federal Communications Commission.

Michael C. Ruger,

Assistant Chief, Allocations Branch, Policy and Rules Division, Mass Media Bureau.

[FR Doc. 91-21303 Filed 9-5-91; 8:45 am]

BILLING CODE 6712-01-M

Notices

Federal Register
Vol. 56, No. 173
Friday, September 6, 1991

This section of the FEDERAL REGISTER contains documents other than rules or proposed rules that are applicable to the public. Notices of hearings and investigations, committee meetings, agency decisions and rulings, delegations of authority, filing of petitions and applications and agency statements of organization and functions are examples of documents appearing in this section.

ACTION

Information Collection Submitted to the Office of Management and Budget for Review

AGENCY: Action.

ACTION: Information collection submitted to the Office of Management and Budget for review.

SUMMARY: This notice sets forth certain information about an information collection proposal by ACTION, the Federal Domestic Volunteer Agency. Under the Paperwork Reduction Act (44 U.S.C., chapter 35), the Office of Management and Budget (OMB) reviews and acts upon proposals to collect information from the public or to impose record keeping requirements. ACTION has submitted two copies of the attached information collection proposal to OMB. OMB and ACTION will consider comments on the proposed collection of information and record keeping requirements. ACTION is requesting an expedited review by OMB with final action by October 15, 1991 so that the approved forms will be ready for data collection beginning October 23, 1991.

DATES: OMB and Action will accept comments received on or before October 7, 1991.

ADDRESSES: Send comments to both

Janet A. Smith, Clearance Officer, ACTION, 1100 Vermont Ave. NW., Washington, DC 20525, Tel: 202/606–5245.

and

Daniel Chenok, Desk Officer for ACTION, Office of Management and Budget, 3002 New Executive Office Bldg., Washington, DC 20503, Tel: 202/395–7316.

SUPPLEMENTARY INFORMATION:

Office of ACTION Issuing Proposal: Program Analysis and Evaluation Division.

Title of Forms: Evaluation of the SCP/AoA Joint Initiative.

Action Forms No.: OPRE 92–1.

Need and Use: ACTION seeks to evaluate this program, determine the ability of SCP sponsors to obtain private sector support and examine program outcomes and impacts. ACTION will use the information to improve the program and future demonstration programs.

Type of Request: New.

Respondent's Obligation to Reply: Voluntary.

Frequency of Collection: The telephone interview will be conducted three times with the Project Directors and twice with the Advisory Councils, Sponsoring Agencies and Area Agency on Aging. The Project Directors will complete the reporting forms three times. The site visits will be conducted twice.

Estimated Number of Annual Responses: 309.

Average burden Hours Per Response: .33

Estimated Annual Reporting or Disclosure Burden: 103 hours.

Signed in Washington, DC, August 30, 1991.

Janet Smith,
Clearance Officer, ACTION.

Jane A. Kenny,
Director of ACTION.

BILLING CODE 6050-28-M

Standard Form **83**
(Rev September 1983)

Request for OMB Review

Important

Read instructions before completing form. Do not use the same SF 83 to request both an Executive Order 12291 review and approval under the Paperwork Reduction Act.

Answer all questions in Part I. If this request is for review under E.O. 12291, complete Part II and sign the regulatory certification. If this request is for approval under the Paperwork Reduction Act and 5 CFR 1320, skip Part II, complete Part III and sign the paperwork certification.

Send three copies of this form, the material to be reviewed, and for paperwork—three copies of the supporting statement, to:

Office of Information and Regulatory Affairs
Office of Management and Budget
Attention: Docket Library, Room 3201
Washington, DC 20503

PART I.—Complete This Part for All Requests.

1. Department/agency and Bureau/office originating request: ACTION - Office of Policy Research and Evaluation

2. Agency code: 3 0 0 1

3. Name of person who can best answer questions regarding this request: David B. Rymph

Telephone number: ( )

4. Title of information collection or rulemaking: Evaluation of the SCP/AOA Joint Initiative

5. Legal authority for information collection or rule *(cite United States Code, Public Law, or Executive Order)*: 42 USC 5056, or P.L. 93-113 Sec. 416 Evaluation

6. Affected public *(check all that apply)*

1 ☐ Individuals or households
2 ☐ State or local governments
3 ☐ Farms
4 ☐ Businesses or other for profit
5 ☐ Federal agencies or employees
6 ☒ Non profit institutions
7 ☐ Small businesses or organizations

PART II.—Complete This Part Only if the Request is for OMB Review Under Executive Order 12291

7. Regulation Identifier Number (RIN)

___ ___ ___ ___ — ___ ___ ___ ___, or, None assigned ☐

8. Type of submission *(check one in each category)*

Classification
1 ☐ Major
2 ☐ Nonmajor

Stage of development
1 ☐ Proposed or draft
2 ☐ Final or interim final, with prior proposal
3 ☐ Final or interim final, without prior proposal

Type of review requested
1 ☐ Standard
2 ☐ Pending
3 ☐ Emergency
4 ☐ Statutory or judicial deadline

9. CFR section affected

_____ CFR _____

10. Does this regulation contain reporting or recordkeeping requirements that require OMB approval under the Paperwork Reduction Act and 5 CFR 1320? ☐ Yes ☐ No

11. If a major rule, is there a regulatory impact analysis attached? 1 ☐ Yes 2 ☐ No

If "No," did OMB waive the analysis? 3 ☐ Yes 4 ☐ No

Certification for Regulatory Submissions

In submitting this request for OMB review, the authorized regulatory contact and the program official certify that the requirements of E.O. 12291 and any applicable policy directives have been complied with.

Signature of program official | Date

Signature of authorized regulatory contact | Date

12. ***(OMB use only)***

Previous editions obsolete
NSN 7540-00-634-4034

83-108

Standard Form 83 (Rev 9-83)
Prescribed by OMB
5 CFR 1320 and E.O. 12291

PART III.—Complete This Part Only If the Request is for Approval of a Collection of Information Under the Paperwork Reduction Act and 5 CFR 1320.

13. Abstract—Describe needs, uses and affected public in 50 words or less

ACTION and the Administration of Aging are conducting the SCP/AoA Joint Initiative for the Vulnerable Elderly. ACTION seeks to evaluate this program, determine the ability of SCP sponsors to obtain private sector support & examine program outcomes & impacts. KEY WORDS:Evaluation,Volunteer service

14. Type of information collection *(check only one)*

Information collections not contained in rules

1 [X] Regular submission
2 [ ] Emergency submission *(certification attached)*

Information collections contained in rules

3 [ ] Existing regulation *(no change proposed)*
4 [ ] Notice of proposed rulemaking (NPRM)
5 [ ] Final, NPRM was previously published
6 Final or interim final without prior NPRM
A [ ] Regular submission
B [ ] Emergency submission *(certification attached)*
7 Enter date of expected or actual Federal Register publication at this stage of rulemaking *(month, day, year)*: _____

15. Type of review requested *(check only one)*

1 [ ] New collection
2 [ ] Revision of a currently approved collection
3 [ ] Extension of the expiration date of a currently approved collection without any change in the substance or in the method of collection
4 [ ] Reinstatement of a previously approved collection for which approval has expired
5 [ ] Existing collection in use without an OMB control number

16. Agency report form number(s) *(include standard, optional form number(s))*

17. Annual reporting or disclosure burden

1 Number of respondents	103
2 Number of responses per respondent	3
3 Total annual responses *(line 1 times line 2)*	309
4 Hours per response	0.33
5 Total hours *(line 3 times line 4)*	103

18. Annual recordkeeping burden

1 Number of recordkeepers	
2 Annual hours per recordkeeper	
3 Total recordkeeping hours *(line 1 times line 2)*	
4 Recordkeeping retention period	years

19. Total annual burden

1 Requested *(line 17-5 plus line 18-3)*	103
2 In current OMB inventory	0
3 Difference *(line 1 less line 2)*	.03
Explanation of difference	
4 Program change	
5 Adjustment	

20. Current *(most recent)* OMB control number or comment number: NA

21. Requested expiration date: 3/30/94

22. Purpose of information collection *(check as many as apply)*

1 [ ] Application for benefits
2 [X] Program evaluation
3 [ ] General purpose statistics
4 [ ] Regulatory or compliance
5 [ ] Program planning or management
6 [ ] Research
7 [ ] Audit

23. Frequency of recordkeeping or reporting *(check all that apply)*

1 [ ] Recordkeeping

Reporting

2 [ ] On occasion
3 [ ] Weekly
4 [ ] Monthly
5 [ ] Quarterly
6 [ ] Semi-annually
7 [X] Annually
8 [X] Biennially
9 [ ] Other *(describe)* _____

24. Respondents' obligation to comply *(check the strongest obligation that applies)*

1 [X] Voluntary
2 [ ] Required to obtain or retain a benefit
3 [ ] Mandatory

25. Are the respondents primarily educational agencies or institutions or is the primary purpose of the collection related to Federal education programs? [ ] Yes [X] No

26. Does the agency use sampling to select respondents or does the agency recommend or prescribe the use of sampling or statistical analysis by respondents? [ ] Yes [X] No

27. Regulatory authority for the information collection

CFR _____ ; or _____ FR _____ ; or, Other *(specify)*: _____

P.L. 93-113, 416(A) 42 U.S.C. 5056(A); Sec. 416 Evaluation

Paperwork Certification

In submitting this request for OMB approval, the agency head, the senior official or an authorized representative, certifies that the requirements of 5 CFR 1320, the Privacy Act, statistical standards or directives, and any other applicable information policy directives have been complied with.

Signature of program official: David B. Rymph Charles R Helfer, for — Date: 8/26/91

Signature of agency head the senior official or an authorized representative: Janet A. Smith — Date:

★U.S. GPO 1987-0-178-558 69031

BILLING CODE 6050-28-C

Information Collection Request

Supporting Statement for the Evaluation of SCP/AoA Joint Initiative

Prepared for: ACTION, 1100 Vermont Avenue, NW., Washington, DC 20525, Under Contract No. 90–043–1011.

A. Justification

1. The Need for the Information

The evaluation of the Senior Companion Program (SCP)/AoA Joint Initiative for the Vulnerable Elderly is designed to:

• Provide ACTION with a description of the SCP/AoA Joint Initiative for the Vulnerable Elderly Program, including such aspects as program implementation, Senior Companion roles and activities, categories and numbers of the clients served, and the roles of ACTION offices and elements of the Aging Network (ACTION State Offices, State Units on Aging and Area Agencies on Aging) in assisting the projects;

• Assess the ability of the grantees and project sponsors to obtain private sector support to continue the Senior Companion components at the end of the three year demonstration period;

• Examine program outcomes and impacts, especially the ability of the Senior Companion Program to help homebound elderly clients maintain independence, the effect on client status and on services offered to the clients; and

• Identify successful models (for) replication and recommend potential changes that would increase the impact and efficiency of the program.

The data collection is needed to meet ACTION requirements including ones specified under the ACTION legislation. The enabling legislation (Public Law 93–113, as amended) states that at least once every three years, ACTION

> shall measure and evaluate the impact of all programs authorized by this Act, their effectiveness in achieving stated goals, in general, and in relation to their cost, their impact on related programs, and their structure and mechanisms for delivery of services.

The data collection represents this evaluation of the SCP/AoA Joint Initiative. Additionally, under the Domestic Volunteer Service Act Amendments of 1989 (Public Law 101–204), the Director of ACTION is authorized to make grants to Older Americans Volunteer Program (OAVP) projects to support programs to address problems that concern the Nation. Included in this mission are programs that provide respite care, including care for frail elderly individuals and for disabled or chronically ill children living at home. This data collection will provide ACTION management with information on the implementation of the Joint Initiative and the effectiveness of the demonstration programs in generating a public-private partnership to sustain the ability of SCP to continue serving the vulnerable elderly.

A major focus in this evaluation is on the sustainability of the public-private partnership established by the Joint Initiative. Under the Joint Initiative, funding is provided to 19 SCP project sites in 11 states to increase services to frail elderly for a period of three years. Full funding for the increased services is provided for an initial 18 month period, then funding is progressively reduced in the second period (9 months) and the final period (9 months). At the end of 36 months, Federal funding for the additional services is discontinued. The SCP projects are committed to developing non-federal funding or other support (e.g., in-kind contributions) to continue services after the end of the demonstration period. Progress toward this goal during the period will be assessed and related information will be collected on the Joint Initiative implementation, new services provided or new populations served, technical assistance in fundraising, and related issues.

The other two key features of the Joint Initiative from an evaluation perspective are:

• Services are to be provided to persons 80 and older living at home. Although a number of SCP projects already provide services to this group, several projects are undertaking to serve new populations or provide new services. These will be examined in the evaluation.

• The initiative is undertaken jointly by ACTION (the federal agency that funds, directs and supports Senior Companion Projects) and the Administration on Aging (AoA), which is funding the Joint Initiative sites and to which the sites report for this aspect of their work. The additional management requirements and coordination will be examined in the evaluation.

In order to obtain information on the progress of implementation, fundraising, and services, data will be collected at intervals over the three-year implementation period, using a combination of telephone interviews, recording forms, abstraction from available records and reports, and site visits.

The telephone interviews will be conducted semi-annually with the Project Directors and annually with representatives of the Advisory Council, Sponsor Agency, and Area Agency on Aging (AAA). Through these interviews, information regarding the program implementation and the environment in which the program is operating will be obtained. To supplement the telephone interviews, the Project Directors will be asked to complete a reporting form twice each year. This form will provide descriptive information about the clients and companions and data for the analysis retention of clients and companions.

Site visits will be conducted annually. The site visit plans and objectives are:

• Year 1—one site visit to pretest instruments and procedures;

• Year 2—five site visits to obtain more in-depth information on: project operations, especially on approaches to obtaining private sector support, problems encountered and modification of approaches over time, and on services provided to clients under the Joint Initiative; and

• Year 3—five site visits to assess success in developing non-federal support, "lessons learned" from the experience, and potential models for application in other projects and settings.

The site visits will supplement and expand on the data collected in the telephone interviews.

The issues being studied are organized under four major headings for data collection: Non-Federal Support, Management/Coordination, Local Community/Environment, Senior Companion Project.

Data will be collected from the project directors, a representative of the SCP advisory council, the director of the SCP project's sponsor agency, a volunteer station supervisor, and a representative of the local Area Administration on Aging (AAA).

Specific issues that will be addressed in the data collection include:

Non-Federal Support:

• What is the plan for raising non-federal funds? What approaches are used (foundations, special events, individuals . . .)? Do the strategies for raising non-federal funds include plans to approach both public and private sector sources?

• Who is responsible for implementing the plan? How does this change over the period of the demonstration?

• What successes have they had by different points in the development process? What problems have they encountered? Will they be able to financially sustain the program after the end of the demonstration period?

• Have goals for raising non-federal funds been modified over the course of the Joint Initiative? What were the reasons, and how have the outcomes been affected?

• At the end of the Joint Initiative Period, has the goal of sustainability been achieved? To what degree has it been achieved? Through what means? What are the project's plans for further development or expansion of private sector support?

Management/Coordination:

• What are the management and reporting requirements for the Joint Initiative?

• Do the State Unit on Aging (SUA), Area Aging Administration (AAA), ACTION or other sources provide technical assistance in fundraising? Are there ways the relationship with SUA, AAA, ACTION or other agencies could be more effective?

Local Community/Environment:

• What are the economic, social and demographic conditions in the community affecting service needs and availability, and private sector support for SCP?

• What effect has the Joint Initiative had on the community? How does this affect the sustainability of the program after the demonstration period?

Senior Companion Project:

• How many new companions are there? Has companion turnover been affected by the Joint Initiative?

• How many new clients are there? What are their characteristics and service needs? Do they differ from the clients already served by SCP? Has the retention of clients been affected by the Joint Initiative or the types of clients served by it?

• Have the management requirements for SCP staff increased as a result of the Joint Initiative? Have new staff been hired as a result of the Joint Initiative?

• What are the plans for continued staffing of the new activities after the end of the demonstration?

2. How, by Whom, and for What Purpose the Information Is To Be Used

The information will be used by ACTION's Evaluation Director and by the Office of Older American Volunteer Programs, at both the project and central level, to improve the SCP's ability to serve the vulnerable elderly and to sustain the new services. In particular, the information will be used to determine the demands of adding services for the vulnerable elderly to the regular SCP and to identify successful fundraising and support strategies that can be replicated in other similar sites.

The evaluation results will be disseminated to both the SCP demonstration sites and other SCP sites. This will allow these programs to build on the demonstration sites' experience to establish, expand or improve programs using older volunteers to serve the vulnerable elderly and to initiate and utilize public-private partnerships to help support SCP programs.

In addition, the information collected will be disseminated to the Congress and to other federal agencies. It will document ACTION's efforts in Congressionally mandated areas, and will also provide legislators and other agencies with information on effective means for volunteer participation in serving the needs of the vulnerable elderly and for establishing public-private partnerships.

If this information were not collected, ACTION would not have evaluation results needed to improve SCP program management and to sustain or expand SCP volunteer services to the vulnerable elderly. Further, without this evaluation, ACTION would not have information on the results of the demonstration sites' efforts to establish public-private partnerships for the support of services to the vulnerable elderly.

3. Use of Improved Technology To Reduce Burden

The total number of sites participating in the Joint Initiative is 19. The different interviews at the various sites, and interviews with the same persons at different times over the course of the demonstration require the use of somewhat different (but related) instruments. Moreover, the instruments do not involve significant skip patterns and do not collect extensive quantitative data that require the use of built-in range checks or other consistency checks. The use of Computer Assisted Telephone Interviewing (CATI) methodology was carefully reviewed, and it was determined that the small size of the sample, together with differences among instruments for different respondents or time points and the nature of the questions to be asked made the use of CATI inefficient and unnecessary to reduce respondent burden or data collection costs. The information being collected will be manually recorded on interview forms and then entered into the computer for analysis. We plan to utilize the Paradox and Statistical Analysis System (SAS) software for data entry, file management, and data analysis. Interviews will be conducted with the same people over the period of the evaluation. To minimize burden, avoid repetition and collect data on the process of implementation and support development over time, summaries of prior interviews will be prepared prior to each round of interviews for use in conducting the surveys.

4. Efforts To Reduce Duplication

Before new data collection is undertaken, relevant existing data has been abstracted from available sources, such as, the County and City Data Book, the OAVP Project Profile and Volunteer Activity survey, and program records, in order to minimize the burden on the respondents. These data are being updated as new sources become available (e.g., the annual Project Profile surveys). In addition, the regular SCP project reports to ACTION and to AoA will be obtained and information will be abstracted from these on expenditures, numbers of volunteers, funding by source, project activities, problems and resolutions, and plans.

Information available from the Profiles and other sources has been excluded from the data collection wherever possible to eliminate duplication. Previously obtained information is included in the data collection only if data elements need to be more current than the archival data.

Financial and other information will be abstracted from regular (quarterly) reports to ACTION and AoA, so the evaluation data collection activities will not duplicate information provided in those reports.

The information being collected for the evaluation focuses on specific volunteer and program management issues that are not documented in the grantee or ACTION management information systems (MISs). For this reason, the information being collected does not duplicate information available from MIS sources.

5. Availability of Similar Information

ACTION's previous SCP evaluations and other research on volunteers have been reviewed. These provide valuable information which will be used for baseline and comparison purposes. In particular, data on volunteer and client characteristics from the earlier evaluations provide data on the impact of SCP participation on volunteers and clients, and the present evaluation will not have to collect data that duplicates this finding. Data on volunteers and companions will be collected for two purposes: (1) To determine the comparability between the demonstration projects and regular SCP projects (to assess the generalizability of demonstration findings to other projects) and (2) to assess the impact of the special features of the demonstrations (service to very old clients, need to

develolp non-federal support) on such outcomes as retention and management requirements. Because the volunteer management challenges are expected to be different and possibly greater for programs like those undertaken in the Joint Initiative, past evaluations cannot provide the information required for this program area.

6. Efforts To Minimize Burden to Small Organizations

The data collection methodology was designed to minimize the burden on the respondents. Relevant existing data will have been gathered previous to the telephone surveys, information will be abstracted from quarterly reports which the sites routinely submit to ACTION and AoA and from short reporting forms designed by RTI to provide information about numbers of companions and clients and services provided. Telephone interviews can be scheduled at the convenience of the respondents during the data collection periods. If project management demands require, interviews can be delayed or even interrupted and rescheduled at more convenient times to suit the needs of the respondents. We will send a copy of the questionnaire to each respondent prior to the telephone interview to facilitate a short interview time. Questionnaires have been designed to facilitate the respondent's being able to answer questions quickly and move through the survey with the interviewers.

7. Consequences if Collected Less Frequently

The main data collection is scheduled to take place at six-month intervals (Project Director telephone interviews) or annually (other telephone interviews, site visits) during the three—year demonstration period. The six-month interval for the Project Director telephone surveys is required to obtain periodic information on progress in program implementation, changes in fundraising goals and strategies and results of efforts to develop a sustainable public-private partnership. Longer intervals would result in recall errors that would jeopardize the accuracy and quality of the reporting. Because the interviews with others will be more general and will collect less detailed information on program implementation and results, annual interviews will be sufficient to collect needed information from them.

8. Special Circumstances That Require Inconsistency With 5 CFR 1320.6

This data collection effort complies with all of the provisions of 5 CFR 1320.6.

9. Consultations Outside the Agency

Federal, regional and local public and private agencies were contacted for two primary reasons:

- To confirm that this research was not duplicating work already performed or in progress. These calls confirmed that the research is not currently being done and that will address a gap in current knowledge; and
- To locate and obtain any information that would be relevant to the formulation of the survey instruments. Information obtained from these sources has been incorporated into the data collection instruments and procedures.

Agencies and persons consulted outside the agency include:

- Staff of Administration on Aging (AoA): Ms. Lois Krol, (202/619–2621), Ms. Carol Crecy (202/619–2617), and Mr. Howard Wallach (202/619–0057).
- Staff of the Visiting Nurses Association of America (VNAA) demonstration project, to ensure non-duplication of effort, coordination of data collection, and review of issues relating to fundraising: Ms. Jean Carroccio (303/753–0350) and Mr. Jeff Pryor (303–861–0700).
- Staff of the Evaluation Contractor, Research Triangle Institute: Dr. Janet D. Griffith, Project Director (919/541–6636); Dr. M. Catherine Hawes, Project Director for previous evaluation of the SCP Homebound Elderly Demonstration (919/541–6340); Ms. Linda Powers, Data Collection Task Leader (919/541–7303); Ms. Lisa Rist, Policy Analyst, (919/541–6512).
- SCP Project Directors for Joint Initiative sites attending evaluation meeting at the SCP Project Directors' Conference, Washington, D.C., April 8–12, 1991. (Directors talked with include: Ms. Marilyn Grau, Ms. Bridgette Spencer, Ms. Christina Oliva.)
- Staff of Washington Business Group on Health (WBGH), who will be providing assistance to AoA and SCP Project Directors through conferences on developing public-private partnerships: Ms. Sally Coberly and Mr. Robert Levin (202/408–9320).
- American Social Health Association (ASHA), to formulate data collection regarding fundraising strategies: Ms. Priscilla Bratcher, Director of Development (919/361–2742).

10. Assurance of Confidentiality

Data are being collected for all 19 sites participating in the demonstration. Most data being collected are not sensitive and are already known to the sponsoring agencies through the grant applications and/or regular quarterly reports (e.g., number of volunteers and clients, fundraising plans and objectives, role of staff and Advisory Council in fundraising). In the analyses, data will be presented in two major formats:

- Frequencies for the total group of 19 sites or subgroups (e.g., rural vs. urban sites)—these will include such measures as the percentage that have reached their fundraising goals for the year or the average (median) amount of funding obtained; or
- Case studies or in-depth descriptions of aspects of the sites' programs that illuminate the frequencies or are applicable to the experience of other sites—for instance, descriptions of particularly effective strategies for obtaining private sector support, or innovative approaches to serving special populations of frail elderly clients.

Because of the small population of sites the frequencies cannot fully conceal the identities of the sites against efforts to identify individual sites; however, sites will not be specifically identified in the frequencies. Therefore, identification would require some effort by the reader. Information in the case studies may be identifiable to other sites in the demonstration or to the funding agencies because of the detail likely to be included. However, these will focus on "best practices' or models that others can follow; therefore, the lack of confidentiality should not be problematic. We may also include some examples of practices that have not been effective; however, in those cases, we will provide less detail and will limit the extent to which sites can be identified. Moreover, because sites are expected to report problems to the funding agencies, the reports for the evaluation will not provide information otherwise unavailable to the funding agencies.

11. Sensitive Questions

Some potentially sensitive information on projects may be collected, such as success in achieving fundraising targets. However, this information is already known to the sponsoring agencies through the regular reports submitted by the projects. And reporting of data in the evaluation reports will be designed to minimize the chance that others outside the sponsoring agencies will become aware of projects' responses to such items.

In some cases, we may obtain sensitive information on individuals in the course of the evaluation—for instance, special problems encountered with individual volunteers or clients. Information of this kind will never be

reported in any way that could identify the individual.

12. Estimates of Annualized Cost to Government and Respondents

The cost to the government for this data collection effort is composed of the estimated cost of the contract for the data collection effort plus the cost of the intra-mural effort of the sponsoring agency. The value of the contract awarded to Research Triangle Institute for the study design and the data collection is $317,410 for the full 40 month period of the evaluation, and the cost for the provision of contract support and management functions by ACTION is $24,664 per year. The annualized (12-month) cost for the contract and ACTION support are $119,887 per year.

The cost to the respondents is on an assumed hourly wage for the different respondents. The hourly wage figures used in the calculations are: project directors, AAA staff and volunteer station supervisors—$17.50/hour; sponsor agency director—$22.50/hour; advisory council members—$30.00/hour; senior companion volunteers—$2.35/hour (stipend). Based on these hourly wages and the burden estimates presented in the next section, the annual costs for respondents, by year are:

Year 1—$973
Year 2—$1660
Year 3—$1660

13. Estimate of Burden

The respondent burden associated with this data collection effort is based on the number of respondents expected to participate in each of the components of the survey. In each year of the evaluation, telephone surveys will be conducted with the project director, one Advisory Council member, and one staff member of the Sponsor Agency, volunteer station, and Area Agency on Aging for each of the 19 sites. The telephone interview lengths will be 30 minutes for the project director and 20 minutes for each of the other interviewees. The project director will be interviewed by telephone once in Year 1 and twice in each of the two subsequent years; all others will be interviewed once per year. In addition, each project director will be asked to complete a reporting form with information about Joint Initiative clients and senior companions; this will be completed at the same intervals as the project director telephone survey, and is expected to take 40 minutes to complete.

In the site visits, we propose to interview the project director (1 hour), an Advisory Council member, and one representative from each of the Sponsor Agency, Volunteer Station, and Area Agency on Aging (30 minutes each). In addition, we will conduct focus groups with SCP volunteers (8 volunteers, for one hour focus group session). One site visit will be conducted in Year 1 and five site visits will be carried out in each of Years 2 and 3.

Exhibit 1 summarizes the respondent burden by year and category of respondent.

14. Changes in Burden

The figures in Exhibit 1 give the burden by year and respondent type for each of three years of data collection. No changes in burden are anticipated over this period.

15. Plans for Tabulation, Statistical Analysis, and Publication

The survey will be conducted over a three year period. During the first year, the SCP demonstration site Project Directors, a representative from the Advisory Council, the director of the Sponsor Agency, the Volunteer Station Supervisor and an AAA representative will be surveyed. These interviews will be carried out for all nineteen sites. In years two and three, the same schedule of interviews will be conducted with the addition of a second interview with the Project Directors six months after the first interview.

The schedule for completion of this work is shown in Exhibit 2. A more detailed description of data analysis and reporting plans is presented below.

The analysis of data from the surveys of the Project Directors, Aging Network representatives, Public and Private Sector representatives and the site visits have three major objectives:

- Describe the programs and activities (particularly fundraising) relating to the SCP Joint Initiative for the Vulnerable Elderly;
- Compare and contrast differences among the programs; and
- Identify successful strategies for raising non-federal funds for possible replication in other SCP programs.

The quantitative analyses will take the form of frequencies, means or medians, limited cross-tabulations and comparisons between measures such as subgroup means.

Examples include:

- *Frequencies:* Percentage of projects that have solicited funds from private sources; percentage of projects that have received technical assistance on raising non-federal funds; percentage of projects that have hired additional staff for the Joint Initiative;

EXHIBIT 1.—ESTIMATED DATA COLLECTION BURDEN BY PROJECT YEAR

[Respondent Type and Burden]

	Telephone interview			Roster			Site visit			Total (Hr.)
	Length (Min)	Number	Total (Hr.)	Length (Min)	Number	Total	Length (Min)	Number	Total	
Year 1:										
P.D.	30	19	9.5	40	19	12.7	60	1	1.0	23.2
A.C.	20	19	6.3				30	1	0.5	6.8
S.A.	20	19	6.3				30	1	0.5	6.8
V.S.	20	19	6.3				30	1	0.5	6.8
A.A.A.	20	19	6.3				30	1	0.5	6.8
Volunteer Companion							60	8	8.0	8.0
Year 1 Total			54.7			12.7			11.0	58.4
Year 2:										
P.D.	30	38	19.0	40	38	25.3	60	5	5.0	49.3
A.C.	20	19	6.3				30	5	2.5	8.8
S.A.	20	19	6.3				30	5	2.5	8.8
V.S.	20	19	6.3				30	5	2.5	8.8
A.A.A.	20	19	6.3				30	5	2.5	8.8
Volunteer Companion							60	40	40.0	40.0

EXHIBIT 1.—ESTIMATED DATA COLLECTION BURDEN BY PROJECT YEAR—Continued

[Respondent Type and Burden]

	Telephone interview			Roster			Site visit			Total (Hr.)
	Length (Min)	Number	Total (Hr.)	Length (Min)	Number	Total	Length (Min)	Number	Total	
Year 2 Total			44.2			25.3			55.0	124.5
Year 3:										
P.D.	30	38	19.0	40	38	25.3	60	5	5.0	49.3
A.C.	20	19	6.3				30	5	2.5	8.8
S.A.	20	19	6.3				30	5	2.5	8.8
V.S.	20	19	6.3				30	5	2.5	8.8
A.A.A.	20	19	6.3				30	5	2.5	8.8
Volunteer Companion							60	40	40.0	40.0
Year 3 Total			44.2			25.3			55.0	124.5

EXHIBIT 2.—PROJECT SCHEDULE

Project activity	Tasks	Weeks
Conduct Pretest Site Visit.	Select 1 Site to visit.	4/29-5/31/91
	Make site visit arrange-ments.	6/10-6/21/91
	Conduct site visit.	6/26-6/27/91
	Analyze site visit data.	7/1-7/12/91
	Revise survey instruments.	7/12-7/26/91
Conduct First Year Telephone Interviews with Project Directors.	Conduct the first year interviews.	10/16-11/6/91
	Prepare first year data summary.	10/31-11/15/91
Conduct First Year Telephone Interviews with Private Sector and Aging Network Representa-tives.	Conduct first year interviews.	10/23-11/13/91
	Prepare first year data summary.	11/8-11/22/91
Prepare First Year Briefing and Interim Report.	Prepare and conduct briefing initiatives proposal narratives and OAVP survey.	11/11-11/27/91
	Prepare interim report draft.	11/14-12/6/91
	Prepare final first year draft.	12/9-12/19/91
Conduct Second Year Telephone Interviews with Project Directors.	Conduct second year interviews.	3/9-3/27/92 9/9-9/30/92

EXHIBIT 2.—PROJECT SCHEDULE—Continued

Project activity	Tasks	Weeks
	Prepare second year data summary.	9/30-10/7/92
Conduct Second Year Interviews with Private Sector and Aging Network Representa-tives.	Conduct second year interviews.	3/23-4/17/92
	Prepare second year data summary.	4/20-5/15/92
Conduct Second Year Site Visits.	Select 5 sites to visit.	1/6-1/31/92
	Make site visit arrange-ments.	3/16-4/24/92
	Conduct site visits.	4/20-5/29/92
	Analyze site visit data.	6/1-8/7/92
Prepare Second Year Briefing and Interim Report.	Prepare and conduct briefing.	10/12-10/20/92
	Prepare interim draft report.	10/26-11/20/92
	Prepare final second year report.	11/23-12/16/92
Conduct Third Year Telephone Interviews with Project Directors.	Conduct third year interviews.	3/1-3/19/93
	Prepare third year data summary.	9/22-20/6/93

EXHIBIT 2.—PROJECT SCHEDULE—Continued

Project activity	Tasks	Weeks
Conduct Third Year Telephone Interviews with Private Sector and Aging Network Representa-tives.	Conduct third year interviews.	3/8-3/29/93
	Prepare third year data summary.	3/24-4/6/93
Conduct Third Year Site Visits.	Select 5 sites to visit.	2/1-2/26/93
	Make site visit arrange-ments.	3/1-3/26/93
	Conduct site visits.	3/22-4/30/93
	Analyze site visit data.	4/26-7/16/93
Prepare Final Briefing, Report, and Project Closeout.	Prepare and conduct briefing.	9/29-10/14/93
	Prepare report draft.	10/18-11/19/93
	Prepare final report.	11/19-12/31/93
	Prepare tapes, files, and data for ACTION.	12/13-12/31/93

• *Means or Medians:* Average amount of funds raised thus far; average client age; average number of service organizations that target the elderly;

• *Cross-Tabulations:* Relationship between the development of a plan for raising non-federal funds and the anticipated sustainability of the program/funding level; relationship between the participation of the Advisory Council in raising non-federal funds and the anticipated sustainability of the program/funding level; and

• *Comparisons of Sub-group Means:* Relationship between the level of for non-federal funds raised and participation of the Advisory Council; level of non-federal funds raised when technical assistance received vs. no technical assistance received.

The analyses will use the Statistical Analysis (SAS) software for the analysis of survey data. These analyses will address questions about the effect of activity, location, fundraising assistance, and other program factors on problems with fundraising and sustainability of the Joint Initiative project.

The quantitative analyses will be supplemented by more in-depth qualitative analyses of the implementation of the Joint Initiative in the 19 sites, using data from the interviews and site visits. These analyses will provide examples that illustrate the quantitative results (e.g., descriptions of different forms of technical assistance, or different roles of Advisory Council members in fundraising). In addition, the in-depth analyses will provide descriptions of key aspects of the implementation process (e.g., how the fundraising plan was developed over time, or early stages of implementing and modifying the fundraising plan). This part of the analysis is important both to understanding the process and to developing models that can be used in other sites.

Tabulations and in-depth reports summarizing the results will be prepared immediately following data collection from each stage of the evaluation. At the completion of each year of the evaluation, ACTION staff will be briefed on the preliminary findings from the data collection activities, and a draft report will be prepared for ACTION's review. The final stage of the project will include the preparation of a final report, an oral presentation, and preparation of the data files for ACTION.

B. Collection of Information Employing Statistical Methods

1. Population Description and Sampling Methods

The evaluation will survey the 19 SCP sites participating in the Joint Initiative. From this point of view, there is no sampling, since all participating sites will be included in the data collection. Within each site, key participants in the demonstration will be selected and interviewed, including the SCP Project Director, a business/community member of the Advisory Council, the director of the Sponsor Agency and participating Volunteer Station, and a knowledgeable person from the AAA. These will be identified through the interviews and discussions with knowledgeable persons in the community. They will be selected because of their positions and/or their knowledge of the Joint Initiative activities and results. Thus they will serve primarily as "informants" or knowledgeable persons, rather than as sample survey respondents. Thus, the design involves a "census" of all participating sites, and the collection of data from persons identified as knowledgeable at each site. No probability sampling is involved at either level.

2. Procedures for Collection of Information

The methodology proposed for the collection of data in this evaluation project is a combination of telephone interviews, client and companion summary forms, abstraction of data from other sources, and site visits. The telephone interviews will require up to one half hour of the respondents' time, and the questions will be carefully targeted to the appropriate respondents in order to faciliate the efficiency of the survey. Further, the questions have been designed so as to allow for close-ended responses with the option of further elaboration if the respondent so desires.

The data collection will be conducted over a three year period. During the first year, the SCP demonstration site Project Directors, a representative from the Advisory Council, the Sponsor Agency, Volunteer Station and AAA will be surveyed. These interviews will be carried out for all 19 sites. In years two and three, the same schedule of interviews will be conducted with the addition of another interview with the Project Directors six months after the first interview. Information will be collected about the nature of the project as well as fundraising efforts and the sustainability of the program.

The interviewers will be professional RTI social science staff who have been extensively involved in the project, so that as to assure familiarity with the evaluation issues and questions. The Project Directors have been advised of the schedule for the telephone survey and site visits so that they know when to expect to be contacted for the evaluation. They will also be contacted by letter prior to each data collection round. This letter will describe the interview and data collection procedures, the evaluation objectives, and the listing of interview topic areas.

Project Directors will also be asked to complete short summary reporting forms on SCP clients and companions participaing in the Joint Initiative. The estimated number per site is 10 companions (5 full-time equivalents) and 15 clients. These forms will be distributed to the Project Director prior to each round of interviews and will be returned at the time of the interview Information to be obtained from the Project Director for each companion is age, sex, SCP experience, services provided, number of clients, and number of hours/week. Client information to be obtained is sex, age, living arrangements, functional status [using items from the HCFC Minimum Data Set], quantity of SCP services and types of services received and reasons for stopping services. These are necessary to assess the retention of volunteers and clients in the program and, by describing the demonstration clients, to determine the degree to which the demonstration project experience is generalizable to other SCP sites and activities.

The site visits will be brief one and a half to two day visits to observe how the program functions and discuss implementation issues with the Project Director, agency sponsor or volunteer station supervisor, Advisory Council member(s), and volunteer companions. One site will be visited in the first year of the evaluation and approximately five sites will be visited in both the second and third years of the evaluation. RTI project staff attended the ACTION SCP Project Director Conference held in Washington, DC on April 8–12, 1991. At this Conference, staff had a chance to talk with SCP Project Directors who will participate in the evaluation and discuss the evaluation plans and objectives with them. The Project Directors did not express any concerns.

3. Maximization of Response Rates

We propose several approaches to maximize response rates. First, all sites are required to participate in the evaluation as a condition of their participation in the Joint Initiative. Second, the data collection plans are specifically targeted to minimize the burden on respondents to the extent possible and to direct questions to those best able to respond to them. Third, with a relatively small target population and continuing interaction during the three-year implementation period, it will be possible to make intensive efforts to establish and maintain the relationship over the period of data collection. Early efforts to establish this relationship have included dissemination of information on the evaluation by AoA and ACTION and a meeting of the evaluation team (from the contractor organization, ACTION and AoA) with

participating SCP Project Directors at the SCP Conference in Washington, DC in April, 1991. Based on discussion at that meeting, there appears to be little anxiety about the evaluation and the project directors expressed an eagerness to cooperate.

4. Tests of Procedures

The data collection procedures were pre-tested in a site visit to Miami, Florida. In this site visit, general program information was obtain, the instruments were revised, and agreements were secured to allow us to do follow-up testing of the telephone instruments. The respondents were then de-briefed to identify problems in responding or gaps in the information collected. In addition, project operating procedures were observed and records reviewed to ensure that the data collection instruments were appropriately targeted and that respondent burden was minimized. The instruments have been again revised based on those tests of the procedures.

5. Individuals Consulted

The Joint Initiative evaluation contractor conducted the earlier evaluation of the SCP Homebound Elderly Demonstration. Staff of that earlier evaluation (including Drs. Griffith and Hawes and Ms. Powers) are either on the team for the current evaluation or have been consulted regarding their experience in data collection for the earlier evaluation. In addition, consultation with staff of the current VNAA Demonstration (Mr. Pryor and Ms. Carroccio) has been used to ensure comparability in data collection and minimize respondent burden.

Project Director Interview Questions

This interview is part of a study being conducted by Research Triangle Institute for the ACTION Agency. The purpose of the study is to examine the implementation and outcomes of the SCP/AoA Joint Initiative for the Vulnerable Elderly Program.

The study is authorized under Public Law 101–204. While you are not required to respond, your answers are needed to make our reports comprehensive and accurate. Your responses will be kept confidential to the extent permissible under the law, and you will not be identified in any report resulting from this study. These questions should take approximately 30 minutes to complete.

Background

Name: _____ ___
Title: _____ _____ .

1. (a) How long have you been director of this SCP Project?

(b) How long, in total, have you worked as an SCP project staff member? (Total years as staff member in this project and/or other SCP projects.)

Senior Companion Project

1. How do you define or distinguish Joint Initiative volunteers from regular SCP volunteers? (for the purpose of clarifying who the Joint Initiative volunteers are to other people we will survey)

2. (a) How many VSYs (Volunteer Service Years) are there in SCP?

(b) How many actual volunteers are there in SCP?

(c) How often do you meet with the companions?

(d) What training is provided to these Joint Initiative companions?

(e) Is this different from the "regular" training program?

3. (a) How many total clients are served by SCP (including the Joint Initiative)?

(b) How many clients are served under the Joint Initiative?

(c) Are the Joint Initiative clients different from other clients served by your SCP project?

(d) Are the services your SCP volunteers provide to the Joint Initiative clients different from services they provide to other SCP clients?

(e) Is the turnover of clients under the Joint Initiative higher or lower than others? Why?

4. (a) What staff (paid and volunteer) do you have for your Senior Companion Project and how much time do they work?

(b) Did the project add new staff for the Joint Initiative services?

(c) If so, what are their responsibilities?

(d) About how much of your time and the staff time is spent on the Joint Initiative, and what management responsibilities do you have for the Joint Initiative? (Are they any different than for the regular SCP?)

5. (a) How has the Joint Initiative affected you SCP project?

(b) Will the Joint Initiative activities be continued after the end of the demonstration? If so, how will this be done?

6. (a) Can you tell us something about the program that you are especially proud of?

(b) Can you provide us with a story about a volunteer that is particularly good?

Management/Coordination

1. (a) Have you participated in prior ACTION demonstrations?

2. (a) What has ACTION done to assist you with the Joint Initiative?

(b) How could ACTION be more helpful in assisting you with the Joint Initiative?

3. (a) What has the State Unit on Aging done to assist you with the Joint Initiative?

(b) How could the SUA be more helpful in assisting you with the Joint Initiative?

4. (a) What has the local Area Agency on Aging done to assist you with the Joint Initiative?

(b) How could AAA be more helpful in assisting you with the Joint Initiative?

5. (a) What is the composition of the Advisory Council (and how many people fill each description)?

(b) What are you looking for when you select Advisory Council members?

(c) Do any members of the Advisory Council have experience developing non-federal support?

Local Community/Environment

1. (a) Does SCP receive any state or local government funding for regular SCP activities (not Joint Initiative)?

(b) Does SCP receive any state or local government funding for the 10% match?

(c) Does SCP receive any state or local government funding for the Joint Initiative?

2. How has the Joint Initiative affected the community?

3. (a) What kind of publicity has been generated for SCP? What efforts have been made to let the community know about SCP?

(b) Have additional efforts been made to publicize SCP as part of the Joint Initiative or since the addition of the Joint Initiative?

Non-Federal Support

1. (a) What is your strategy for developing non-federal support for Joint Initiative activities this year?

(b) If corporate giving is a part of your plan, how did you target corporations to solicit?

(c) If you write grants as part of your strategy, how often do you write grant applications?

(d) What is the role of the Volunteer Station in providing non-federal support/funds for the Joint Initiative?

2. (a) From what sources did you get/have you gotten advice about strategies for developing non-federal support?

(b) Who developed the plan for raising non-federal funds?

(c) Who is responsible for implementing the plan?

(d) What experience or training in how to develop non-federal support do they have?

(e) How much staff time is devoted to raising non-federal funds?

4. How does the plan for raising non-federal funds for the Joint Initiative compare with your strategies to raise the 10% match requirement?

5. (a) How much total money has been raised or committed thus far for the Joint Initiative since it started?

(b) How much money has been raised from different sources and how was that funding secured?

(c) Do you have or have you considered using a fee-for-service system to supplement your other efforts to develop non-federal support?

(d) What types and amounts of in-kind donations have been received, from what sources?

(e) Which, if any, of these sources or contributors are new as a result of the Joint Initiative?

(f) How much funding do you expect to raise for the Joint Initiative this year?

6. (a) Has your total budget for the year increased due to the Joint Initiative or has it remained the same as before the Joint Initiative?

(b) Could we have a copy of your budget for this year?

7. (a) What are some of the barriers to developing continuing non-federal support?

(b) What about the SCP provides the strongest basis for developing continuing support?

8. Could you send us copies of written materials, for example, brochures, recording forms, publicity materials, newspaper articles. . .?

9. Could you give us the names and telephone numbers of the following people who we also need to survey?

Instructions for Completing the Recording Forms

Introduction

Thank you for agreeing to complete these two recording forms every six months, beginning _____.

These forms are part of a study being conducted by Research Triangle Institute for the ACTION Agency. The purpose of the study is to examine the implementation and outcomes of the SCP/AoA Joint Initiative for the Vulnerable Elderly Program.

The study is authorized under Public Law 101–204. While you are not required to respond, your answers are needed to make our reports comprehensive and accurate. Your responses will be kept confidential to the extent permissible under the law, and you will not be identified in any report resulting from this study. These questions should take approximately 40 minutes to complete.

The following instructions will help to clarify the forms for you and simplify the process of completing them. Please be sure to mark a response in every box. You may need to discuss these issues with the companions in order to have the most accurate information. Please remember that we are only interested in those clients and companions who are a part of the Joint Initiative component of your Senior Companion Program. Please note that we are interested in the current status of the clients and companions.

Recording Form: Joint Initiative Clients

Name, Age and Sex: For each client;

Living Arrangements: Does the client live alone, live with a spouse or live with others—Y (Yes), N (No);

SCP Services: When did the client start receiving services; how many visits per week does the client receive and how many hours per week is the client visited:

Services Received: We would like to know what services the client receives and how many times per month the client receives these services. Please use the following scale:

0 (never),
1 (one or fewer times per month),
2 (twice per month),
3 (three or more times per month).

Physical ADL: For example, assisting with dressing, bathing, getting to the bathroom, getting in and out of bed, walking or eating;

Assist Around House: For example, light housekeeping, preparing meals, using the telephone, fixing things around the house, or managing money;

Assist/Visit Outside Home: For example, providing escort service, or taking for rides or walks;

Information /Access to Social Services: For example, providing information about community services, or helping obtain needed services (e.g. visiting nurse, SSI);

Peer Social Support: For example, reminiscing, listening, providing advice, reading, playing games, grooming (combing hair, painting nails), or keeping company;

Other: If none of the above categories accurately represents what services the client is receiving, please indicate at the bottom of the sheet what services the client is receiving.

Risk Factors for Admission to a Nursing Home: Indicate which, if any of the following conditions describes the client, and where there is a scale indicate the appropriate frequency:

0 (never),
1 (rarely),
2 (sometimes),
3 (always).

Recent Significant Event: For example, within the past 2–3 months, client has experienced death or moving away of spouse, child or other social support, flare-up of chronic problem, recent fall, stroke, or heart attack—Y (Yes), N (No); please describe at the bottom of the sheet;

Chairfast or Bedfast: Client is in a bed or chair/recliner for all or most of day (22 hours or more). Includes clients who rise for toileting—Y (Yes); N (No);

Difficulty walking or with balance: Client experiences difficulty in walking or transferring (i.e. moving to and from settings, such as sitting to standing), or with balance on a regular basis. Do not include clients who use mobility aids (e.g., cane, walker, wheelchair) without difficulty;

Incontinence: Client experiences loss of bladder or bowel continence. Do not include clients who use incontinence products (e.g., pads or briefs) with success;

Dependency in Bathing: Client requires assistance in bathing (whether full body bath/shower or sponge bath), excluding washing back and hair. Do not include getting in and out of tub/shower;

Dependency in Toileting: Client requires assistance in toileting. Do not include clients who use toileting aids (e.g., bedpan, urinal) with out difficulty. Do include clients who can toilet without assistance but who require assistance getting to the toilet or who require scheduled reminders to toilet;

Dependency in Dressing: Client requires assistance in dressing. Include the need for assistance in selecting clothes, as well as in putting on and removing clothes, fastening clothes, etc.;

Confusion/Alzheimer's: 0 (client does not suffer from confusion or Alzheimer's), 1 (Client requires assistance) (i.e., reminders, cues, or supervision) in planning and acting out daily routines on a daily or almost daily basis), 2 (Client experiences non-occasional episodes of confusion or disorientation), 3 (Client has a diagnosis, or suspected diagnosis of Alzheimer's disease or other dementia). Do not include occasional or insignificant memory loss or lapses, unless the losses are potentially dangerous (e.g., unable to remember location of home or basic safety measures);

Diabetic: Client has been diagnosed as being diabetic—Y (Yes), N (No).

Retention: When did the client stop receiving services and why.

Recording Form: Joint Initiative (J.I.) Companions

This form is similar to the client form, but records information from the perspective of the companions. If they serve both clients from the regular SCP program as well as Joint Initiative clients, please complete both the "J.I." items and the "OTHER" items/boxes. Please complete all information for each of your companions who participate in the Joint Initiative.

Name, Age and Sex: For each companion;

Services Provided: We would like to know what services the companion provides to the clients and how many times per month the companion provides these services. Please use the following scale:

0 (never),
1 (one or fewer times per month),
2 (twice per month),
3 (three or more times per month).

Physical ADL: For example, assisting with dressing, bathing, getting to the bathroom, getting in and out of bed, walking or eating;

Assist Around the House: For example, light housekeeping, preparing meals, using the telephone, fixing things around the house, or managing money;

Assist/Visit Outside Home: For example, providing escort service, or taking for rides or walks:

Information/Access to Social Services: For example, providing information about community services, or helping obtain needed services (e.g., visiting nurse, SSI);

Peer Social Support: For example, reminiscing, listening, providing advice, reading, playing games, grooming (combing hair, painting nails), or keeping company;

Other: If none of the above categories accurately represents what services the companion is providing, please indicate at the bottom of the sheet what services the companion is providing.

Number of SCP Clients: How many clients does the companion serve, Joint Initiative and Non-Joint Initiative;

Number of Client Hours/Week: How many hours per week does the companion spend with the clients (total);

Companion Retention: If the companion withdrew or was asked to withdraw from the program, when did this occur and why.

Sponsor Agency Interview Questions

This interview is part of a study being conducted by Research Triangle Institute for the ACTION Agency. The purpose of the study is to examine the implementation and outcomes of the SCP/AoA Joint Initiative for the Vulnerable Elderly Program.

The Study is authorized under Public Law 101–204. While you are not required to respond, your answers are needed to make our reports comprehensive and accurate. Your responses will be kept confidential to the extent possible under the law, and you will not be identified in any report resulting from this study. These questions should take approximately 20 minutes to complete.

Background

Name:_____
Title: _____

1. (a) How long have you been in your current position?

(b) How long, in total, has your agency had SCP volunteers? (Total years in current position or other work)

(c) How much of your time is spent on Senior Companion work (with volunteers, clients, management, other activities)?

I will be asking several questions about the Joint Initiative aspect of the Senior Companion Program. In a conversation with _____, the SCP director, she/he informed me that the Joint Initiative companions are defined or distinguished by

_____

_____

Senior Companion Project

1. (a) What is the role of the Sponsor Agency in SCP management and coordination? (what do you do with SCP?)

(b) Has the role of the Sponsor Agency changed as a result of a Joint Initiative?

Local Community/Environment

1. (a) How well known is SCP in the community?

(b) Have activities under the Joint Initiative changed the awareness of SCP in the community?

Non-Federal Support

1. (a) What is the role of the Sponsor Agency in raising non-federal funds for SCP?

(b) Has the Joint Initiative added to or changed this role? If so, how?

(c) Does the SCP project raise its own non-federal funds separate from the overall agency fundraising?

(d) Does your agency restrict the way in which funds that have been raised can be used by the SCP?

2. Do you think that the Joint Initiative is a sustainable addition to the SCP after the end of the Federal funding period?

Volunteer Station Supervisor Interview Questions

This interview is part of a study being conducted by Research Triangle institute for the ACTION Agency. The purpose of the study is to examine the implementation and outcomes of the SCP/AoA Joint Initiative for the Vulnerable Elderly Program.

The study is authorized under Public Law 101–204. While you are not required to respond, your answers are needed to make our reports comprehensive and accurate. Your responses will be kept confidential to the extent permissible under the law, and you will not be identified in any report resulting from this study. These questions should take approximately 20 minutes to complete.

Background

Name:_____
Title: _____

1. (a) How long have you been in your current position?

(b) How much of your time is spent on Senior Companion work?

(c) Do you have another staff member who works with SCs?

(d) If so, how much time do they spend, and what do they do?

I will be asking several questions about the Joint Initiative aspect of the Senior Companion Program. In a conversation with _____, the SCP director, she/he informed me that the Joint Initiative companions are defined or distinguished by

_____

_____

Senior Companion Project

1. (a) How long have you had SCP volunteers working with your organization?

(b) How many SCP volunteers work with your organization?

2. (a) Do you utilize the services of other volunteers as well as SCP? If no, skip to Question 3(a).

(b) Are the SCP volunteers more or less effective than other volunteers? Why?

(c) Do SCP volunteers have more or fewer problems learning the job than other volunteers?

(d) Are SCP volunteers more or less dependable than other volunteers?

(e) Do clients feel more or less comfortable with SCP volunteers than with other volunteers?

(f) Are SCP volunteers more or less easy to retain than other volunteers?

3. (a) What services do the J.I. volunteers provide to your clients?

(b) How effective do you feel the J.I. volunteers are?

4. (a) What is the main advantage to your organization of having J.I. volunteers?

(b) Can you provide an example of a J.I. volunteer who has really made a difference for one of your clients?

5. (a) What could SCP project staff to facilitate your use of J.I. volunteers?

(b) Would you recommend using J.I. volunteers to another organization?

Non-Federal Support

1. (a) Do you help raise non-federal funds for SCP? If so, how?

(b) Do you provide any additional support in raising non-federal support for the Joint Initiative?

Advisory Council Interview Questions

This interview is part of a study being conducted by Research Triangle institute for the ACTION Agency. The purpose of the study is to examine the implementation of outcomes of the SCP/AoA Joint Initiative for the Vulnerable Elderly Program.

The study is authorized under Public Law 101–204. While you are not required to respond, your answers are needed to make our reports comprehensive and accurate. Your responses will be kept confidential to the extent permissible under the law, and you will not be identified in any report resulting form this study. These questions should take approximately 20 minutes to complete.

Background

Name:_____
Title/Organization:_____

1. (a) How long have you been a member of the Advisory Council for this SCP project?

(b) Have you had other past experience with SCP?

(c) Do you serve on the Advisory Council of other organizations in the community that serve older persons?

(d) Have you held or do you hold an office on the Advisory Council?

(e) Have you been involved in raising non-federal funds for SCP?

(f) About how much time do you spend in your work as a member of the SCP Advisory Council?

I will be asking several questions about the Joint Initiative aspect of the Senior Companion Program. In a conversation with _____, the SCP director, she/he informed me that the Joint Initiative companions are defined or distinguished by

Senior Companion Project

1. (a) What are you particularly proud of about the Senior Companion Program?

(b) What are you particularly proud of about the Senior Companions (volunteers)?

2. Do you have any ideas/things you would like to see SCP do that you think could benefit the program?

Management/Coordination

1. What is the biggest contribution the Advisory Council makes to the SCP?

2. (a) When was the last evaluation of the SCP done? May we have a copy?

(b) Who conducted the evaluation and what type of evaluation was conducted?

Local Community/Environment

1. (a) How long has SCP been in the community?

(b) What kind of publicity has been generated for SCP? What efforts have been made to let the community know about SCP?

(c) Have additional efforts been made to publicize SCP as part of the Joint Initiative or since the addition of the Joint Initiative?

(d) What has the role of the Advisory Council been in generating publicity for SCP?

2. (a) Does SCP receive financial support form:

(b) Has the Joint Initiative affected the level of support from any of these sources?

Non-Federal Support

1. (a) Is the Advisory Council involved in raising non-federal funds for SCP?

(b) If no, does the Advisory Council plan to be involved in raising non-federal funds in the future? If no, why not?

(c) If yes, how is the Advisory Council involved in raising non-federal funds?

(d) Is the Advisory Council involved in raising non-federal funds for the Joint Initiative?

(e) If so, how is the Advisory Council involved in raising non-federal funds for the Joint Initiative?

2. Do you have experience with fundraising?

3. (a) Are there "competing" organizations in the community that will be trying to tap the same funding sources as the SCP?

(b) Do you perceive that this "competition" will make it difficult for SCP to achieve its fundraising goals?

(c) Is there an effort to coordinate fundraising efforts with these other organizations?

4. (a) Do you feel that the Joint Initiative is sustanable? If so, how?

(b) What are some anticipated problems in sustaining the Joint Initiative?

(c) What about the SCP provides the strongest basis for developing continuing support?

AAA Interview Questions

This interview is part of a study being conducted by Research Triangle Institute for the ACTION Agency. The purpose of the study is to examine the implementation and outcomes of the SCP/AoA Joint Initiative for the Vulnerable Elderly Program.

The study is authorized under Public Law 101–204. While you are not required to respond, your answers are needed to make our reports comprehensive and accurate. Your responses will be kept confidential to the extent permissible under the law, and you will not be identified in any report resulting from this study. These questions should take approximately 20 minutes to complete.

Background

Name:_____
Title/Organization:_____

1. (A) How long have you been in your current position?

(b) How long, in total, have you worked with SCP?

(c) How much of your time is spent on Senior Companion work (with volunteers, clients, other activities)?

I will be asking several questions about the Joint Initiative aspect of the Senior Companion Program. In a conversation with _____, the SCP director, she/he informed me that the Joint Initiative companions are defined or distinguished by

Local Community/Environment

1. (a) How large is the population of older persons in the area you serve?

(b) Has there been economic growth in the community in the past few years?

2. (a) Are there programs or services other than SCP in the community that target the frail/homebound elderly?

(b) If so, what are they?

(c) Do they provide the same services as SCP?

3. Do programs serving the elderly receive financial support from the business community?

4. Has the Joint Initiative affected the community? If so, how?

Management/Coordination

1. (a) Is there coordination (formal or infomal) among agencies that serve the elderly in your community?

(b) If so, how is this coordination done?

2. (a) Have you worked with the SCP project on coordination of the Joint Initiative with the Aging Network?

(b) If yes, what have you done?

Non-Federal Support

1. (a) Has your AAA provided advice or technical assistance to SCP for developing non-federal funding for the Joint Initiative?

(b) If yes, who in AAA has provided technical assistance?

(c) If yes, how much staff time do they spend on it?

(d) If yes, what experience do these staff have?

2. In addition to offering technical assistance, has your AAA done other things to assist SCP wth raising non-federal funds for the Joint Initiative in other ways?

Site Visit Protocol

Project Director

This interview is part of a study being conducted by Research Triangle Institute for the ACTION Agency. The purpose of the study is to examine the implementation and outcomes of the SCP/AoA Joint Initiative for the Vulnerable Elderly Program.

The study is authorized under Public Law 101–204. While you are not required to respond, your answers are needed to make our reports comprehensive and accurate. Your responses will be kept confidential to the extent permissible under the law, and you will not be identified in any report resulting from this study. These questions should take approximately 60 minutes to complete.

1. How do you recruit companions for the Joint Initiative?

2. Is your recruiting strategy for the Joint Initiative different from regular SCP recruiting? If so, how?

3. How do you select companions to participate in the Joint Initiative? What do you look for in these companions?

4. Do you or the volunteer station(s) provide special training for companions working on the Joint Initiative? If yes, what additional training is provided?

5. What training is most helpful for the companions?

6. Does working with Joint initiative clients and companions create additional management requirements for you or your staff? If yes, what kinds of requirements, and what amount of time is required to met them?

7. Why do companions stop working with Joint Initiative clients? Are the reasons different from those for other SCP work?

8. Is the turnover in Joint Initiative companions different from that for those working with regular SCP clients? If yes, how/why?

9. Is the turnover in Joint Initiative clients different from that for regular SCP clients? If yes, how/why?

10. What do you look for in a volunteer station for the Joint Initiative? Is this different from volunteer stations for the regular SCP?

11. Is the Joint Initiative more or less difficult to recruit volunteer stations for? Why?

12. What role do the volunteer stations have in working with companions who are working in the Joint Initiative?

13. Are there specific characteristics about your community that you feel play a major role in whether or not a program like the Joint Initiative will be successful? What are they?

14. Based upon your experience, what advice would you give another SCP project director in getting started with a program like the Joint Initiative?

15. What can ACTION or AoA do to facilitate the success of the Joint Initiative?

16. Do you think the Joint Initiative activities are sustainable after the end of ACTION/AoA funding? If so, why and how?

Site Visit Protocol

Volunteer Station Supervisor

This interview is part of a study being conducted by Research Triangle Institute for the ACTION Agency. The purpose of the study is to examine the implementation and outcomes of the SCP/AoA Joint Initiative for the Vulnerable Elderly Program.

The study is authorized under Public Law 101–204. While you are not required to respond, your answers are needed to make our reports comprehensive and accurate. Your responses will be kept confidential to the extent permissible under the law, and you will not be identified in any report resulting from this study. These questions should take approximately 30 minutes to complete.

1. What kinds of services does your organization provide to older people in the community?

2. How do SCP volunteers fit in to your organization? What is the role of SCP volunteers? How many are there? How many paid staff do you have? How many other volunteers?

3. Do you have SCP volunteers working in other activities as well as in the Joint Initiative?

4. Do you have a selection process for which SCP volunteers you will use in the Joint Initiative work? If so, what is the selection process?

5. What activities are done by SCP volunteers? Do these differ from ones done by other volunteers?

6. Are there some activities working with older people for which you think SCP volunteers are especially effective or some that you feel they are generally not particularly suited to doing?

7. What training do SCP volunteers need to be able to serve your clients' needs? Do they get that training? Who provides the training?

8. Can you describe any outstanding SCP volunteers and the difference they have made for your clients?

9. Are there different management requirements when working with SCP volunteers compared with other volunteers?

10. Does the SCP project director help you with the management of the Joint Initiative volunteers?

11. Do you have regular contact with the SCP project director about the Joint Initiative? If so, how often?

12. Are there areas in which the SCP project could assist you that they are not currently doing or areas in which you could use more assistance?

13. How has using SCP Joint Initiative volunteers benefitted your organization?

14. Have there been any problems with using SCP Joint Initiative volunteers? If yes, what problems have you had, and how do you deal with them? Are these different problems than you have with other SCP volunteers?

15. What advice would you give to an agency or organization that is considering using SCP volunteers to serve clients like yours?

16. Do you think the Joint Initiative activities are sustainable after the end of ACTION/AoA funding? If so, why and how?

17. Have you participated in any fundraising activities for SCP?

Site Visit Protocol

Questions for Advisory Council

This interview is part of a study being conducted by Research Triangle Institute for the ACTION Agency. The purpose of the study is to examine the implementation and outcomes of the SCP/AoA Joint Initiative for the Vulnerable Elderly Program.

The study is authorized under Public Law 101–204. While you are not required to respond, your answers are needed to make our reports comprehensive and accurate. Your responses will be kept confidential to the extent permissible under the law, and you will not be identified in any report resulting from this study. These questions should take approximately 30 minutes to complete.

1. What are the main organizations that serve frail elderly persons in your community?

2. Do these organizations receive financial or other support from the local business community? From other sources in the community? If so, what sources?

3. How does the Joint Initiative fit into the overall set of services to the frail elderly?

4. Does the SCP Joint Initiative receive financial or other support from the business community? Why or why not? What kinds of support does it receive?

5. How much can the local community, through private sector support (either corporate or individual) sustain existing SCP services under the Joint Initiative? Could they support expansion of existing Joint Initiative SCP services?

6. Has the Joint Initiative affected the sustainability of SCP? If so, how?

7. How much does local (e.g., city, county) or state government support current SCP services?

8. What is the financial status of local government in your area? Are there changes experienced or anticipated in the level of local/state government funding for social services for older people in the community? If so, What are they? Are they anticipated to impact on the support for SCP?

9. If so, are there contingency plans for alternative funding sources for SCP should the public sector funding be reduced or eliminated?

10. Are there efforts made with public officials to make them aware of the work SCP is doing in the Joint Initiative and to try to encourage funding for the program?

11. If so, does the Joint Initiative make the program more attractive to public officials for funding purposes?

Site Visit Protocol

Questions for Sponsor Agency

This interview is part of a study being conducted by Research Triangle Institute for the ACTION Agency. The purpose of the study is to examine the implementation and outcomes of the SCP/AoA Joint Initiative for the Vulnerable Elderly Program.

The study is authorized under Public Law 101–204. While you are not required to respond, your answers are needed to make our reports comprehensive and accurate. Your responses will be kept confidential to the extent permissible under the law, and you will not be identified in any report resulting form this study. These questions should take approximately 30 minutes to complete.

1. Has sponsoring SCP changed the management requirements for your organization? If yes, how?

2. How does SCP fit into your organization? How does SCP contribute to meeting the goals of your organization?

3. Does the Joint Initiative impact on how well SCP fits in with your agency?

4. What amount or proportion of SCP's funding comes from your organization? How much of the Joint Initiative funding?

5. How much funding has been raised for Joint Initiative? How have other SCP funds been raised?

6. What is the relationship between this SCP fundraising and your organization's other fundraising? (Problems, advantages, collaboration, etc.)

7. At the end of the Joint Initiative funding period, do you anticipate that the activities will be continued? If so, how do you expect them to be supported? If not, will the services be continued through other means?

8. What advice would you give to an organization that is considering serving as a sponsor agency for a program like the Joint Initiative?

Site Visit Protocol

Senior Companions (Focus Groups)

This interview is part of a study being conducted by Research Triangle Institute for the ACTION Agency. The purpose of this study is to examine the implementation and outcomes of the SCP/AoA Joint Initiative for the Vulnerable Elderly Program.

The study is authorized under Public Law 101–204. While you are not required to respond, your answers are needed to make our reports comprehensive and accurate. Your responses will be kept confidential to the extent permissible under the law, and you will not be identified in any report resulting form this study. These questions should take approximately 60 minutes to complete.

1. How did you learn about the Senior Companion program you are participating in?

2. Why did you decide to participate in this program?

3. What services do you provide to your clients?

4. Can you describe an experience with the program that was particularly rewarding or in which you felt you really made a difference?

5. What are some problems that you have encountered working in the program? How would you overcome this kind of problem, or avoid it in the future?

6. In doing your Senior Companion work, what assistance or support from the Project Director is most helpful?

7. What assistance or support from the Volunteer Station Supervisor is most helpful?

8. In doing your Senior Companion work, do you get assistance or support from other Senior Companions?

9. Is there other assistance—from Project Director, Volunteer Station Supervisor or others—that would help you do your work? If yes, describe.

10. What kind of training did you get for your work in this program?

11. What about this training was most helpful?

12. What additional training would be helpful?

13. Have you ever stopped working with a Joint Initiative client? If yes, why?

14. Do you plan to continue serving in the Joint Initiative? Why? Why not?

15. Have you participated in any fundraising activities? Do the other/SCP companions also do fundraising?

Note: At beginning of focus group session, leader will define the Joint Initiative Program/activities for participants, to ensure focus on Joint Initiative issues.

Site Visit Protocol

Questions for AAA/SUA

This interview is part of a study being conducted by Research Triangle Institute for the ACTION Agency. The purpose of the study is to examine the implementation and outcomes of the SCP/AoA Joint Initiative for the Vulnerable Elderly Program.

The study is authorized under Public Law 101–204. While you are not required to respond, your answers are needed to make our reports comprehensive and accurate. Your responses will be kept confidential to the extent permissible under the law, and you will not be identified in any report resulting form this study. These questions should take approximately 30 minutes to complete.

1. How does the SCP Joint Initiative fit into the Aging Network in your area?

2. Does the Joint Initiative fill gaps in services for the elderly or does it overlap with other programs?

3. How much contact do you have with the SCP project director concerning the Joint Initiative?

4. Do you think the Joint Initiative is a sustainable program in this community after the end of AoA/ACTION funding?

5. How do you believe it can be sustained after the end of the AoA/ACTION funding?

[FR Doc. 91–21372 Filed 9–5–91; 8:45 am]

BILLING CODE 6050–28–M

DEPARTMENT OF AGRICULTURE

Forms Under Review by Office of Management and Budget

August 30, 1991.

The Department of Agriculture has submitted to OMB for review the following proposals for the collection of information under the provisions of the Paperwork Reduction Act (44 U.S.C. chapter 35) since the last list was published. This list is grouped into new proposals, revisions, extensions, or reinstatements. Each entry contains the following information:

(1) Agency proposing the information collection; (2) Title of the information collection; (3) Form number(s), if applicable; (4) How often the information is requested; (5) Who will be required or asked to report; (6) An estimate of the number of responses; (7) An estimate of the total number of hours needed to provide the information; (8) Name and telephone number of the agency contact person.

Questions about the items in the listing should be directed to the agency person named at the end of each entry. Copies of the proposed forms and supporting documents may be obtained from:

Department Clearance Officer,
USDA, OIRM, room 404-W Admin. Bldg.,
Washington, DC 20250,
(202) 447-2118.

Revision

- National Agricultural Statistics Service,
  Water Quality/Food Safety,
  On occasion,
  Farms; 20,970 responses; 17,069 hours,
  Larry Gambrell (202) 447-7737.

Extension

- Agricultural Stabilization and Conservation Service
  7 CFR Part 701—Conservation and Environmental Programs Regulations
  Form ACP-245, Request for Cost-Sharing/Practice Approval and Payment Application.
  ACP-245,
  On occasion; Annually,
  Individuals or households; Farms; 1,400,000 responses; 350,000 hours,
  Charles W. Sims (202) 447-7334.

New Collection

- Food and Nutrition Service,
  Child Nutrition Demonstration Evaluation Project,
  One time data collection,
  Individuals or households; Businesses or other for-profit; 474 responses; 122 hours,
  Susan Batten, (703) 756-3117.

Reinstatement

- Farmers Home Administration,
  7 CFR 1980-A, Guaranteed Loan Program (General),
  FmHA 449-36, 14, 35, 30, FmHA 1980-19, 41, 43, FmHA 1980-44,
  On occasion,
  Individuals or households; Businesses or other for-profit;
  124,485 responses; 242,673 hours,
  Jack Holston, (202) 382-9736.
- Farmers Home Administration,
  7 CFR 1980-B, Guaranteed Farmer Program Loans,
  FmHA 1980-15, 24, 25, 38, 58, 64 and FmHA 449-11,
  On occasion,
  Individuals or households; State or local governments; Farms; Businesses or other for-profit; 215,440 responses; 313,962 hours,
  Jack Holston (202) 382-9736.

Larry K. Roberson,
Deputy Departmental Clearance Officer.

[FR Doc. 91-21321 Filed 9-5-91; 8:45 am]

BILLING CODE 3410-01-M

Agribusiness Promotion Council Meeting

Notice is hereby given that the USDA Agribusiness Promotion Council, advisory committee to the Secretary of Agriculture on matters pertaining to the Caribbean Basin, will meet from 1 p.m. to 5 p.m. on Tuesday, October 2 from 9:30 a.m. to 4 p.m. The meeting will be held in room 104-A Administration Building, U.S. Department of Agriculture. The agenda for the meeting includes: Report on previous activities, discussion of issues of concern to the entire Council, and recommendations on the future direction of the program and specific projects. The meeting is open to the public. The public may participate as time and space permit.

Comments may be submitted to Dr. Duane Acker, Administrator, Office of International Cooperation and Development, until September 15, 1990. Further information may be obtained by calling Avram E. Guroff, Assistant to the Administrator, Office of International Cooperation and Development, (202) 245-5855.

Done at Washington, DC, this 2nd day of August 1991.

Duane Acker,
Administrator.

[FR Doc. 91-21369 Filed 9-5-91; 8:45 am]

BILLING CODE 3410-43-M

Forest Service

Right Star Minerals, Inc. Mine Operating Plan

AGENCY: Forest Service, USDA.

ACTION: Notice of intent to prepare an environmental impact statement.

SUMMARY: The Forest Service will prepare an Environmental Impact Statement for a proposal to approve a plan of operations for the development of the Right Star Limestone Mine on the Big Bear Ranger District, San Bernardino National Forest, San Bernardino County, California. The document to be prepared will be an Environmental Impact Statement (EIS) meeting federal environmental regulations.

The mining plant of operations proposes to expand an existing .6 acre bulk sample site by an additional 10.4 acres, all on National Forest System lands.

The Forest Service will be the lead federal agency in the preparation of the EIS.

SUPPLEMENTARY INFORMATION: The General Mining Law of 1872 (May 10, 1872) as amended, authorizes the location and extraction of minerals, including limestone, subject to regulations prescribed by law.

Mining regulations for the Forest Service are found in 36 CFR Part 228, Subpart A, first issued on August 28, 1974.

In preparing the environmental impact statement, the Forest Service will identify and consider a range of alternatives for this site. One of these will be no development of the site. Other alternatives will consider the company proposal, and environmentally modified proposal and an environmentally constrained proposal. Alternative locations for overburden dumps, roads, and support facilities also will be considered.

Gene Zimmerman, Forest Supervisor, San Bernardino National Forest, San Bernardino, California is the responsible official.

Public participation will be especially important at several points during the analysis. The first point is during the scoping process (40 CFR 1501.7). The Forest Service will be seeking information, comments, and assistance from Federal, State, and local agencies and other individuals or organizations who may be interested in or affected by the proposed action. This input will be used in preparation of the draft environmental impact statement (DEIS). The scoping process includes:

1. Identifying potential issues.

2. Identifying issues to be analyzed in depth.

3. Eliminating insignificant issues or those which have been covered by a relevant previous environmental analysis.

4. Exploring additional alternatives.

5. Identifying potential environmental effects of the proposed action and alternatives (i.e. direct, indirect, and cumulative effects and connected actions).

6. Determining potential cooperating agencies and task assignments.

The mining of limestone is a significant activity on the north slope of the San Bernardino Mountains and is important to the economy of the Lucerne Valley Community. In excess of 3.5 million tons of limestone material are removed annually from quarries on both private and Federal lands. An additional 1.8 million tons of un-economic materials are removed but re-deposited in waste dumps. The limestone mining operations on the north slope have been carried on for many years through various approvals (Plans of Operations and a variety of amendments to those plans). The need for a consolidation of plans and amendments and a need to emphasize reclamation and advanced planning has been identified.

Right Star Minerals, Inc., has been bulk-sample mining at the edge of the 11 acre site. Approximately .6 of an acre has been mined to date. Mining equipment (e.g. drills, crushers, loaders) has not been left on the site. Right Star proposes to expand from the current bulk sample to an anticipated 200,000 tons of product in the next 5 years, based upon market demands.

Right Star Minerals, Inc., a California corporation, dba as North Star Minerals, holds leases for Smart Ranch Carbonate PMCs 11 and 16 from Don Fife and Associates in Lone Valley, Big Bear Ranger District (Sec 32, T3N, R2E, SBBM) all within San Bernardino County. Right Star proposes to develop a quarry on the 11 acres and conduct operations that will yield high quality screened limestone products. Access to the site is via SH 18 and Forest road 3N03. Approximately 8 trucks per day would transport 200 tons of limestone to markets in the Lucerne Valley area. The 11 acres will be used for soil stockpiles, product stockpiles, processing facility and a benched quarry. Operations will include vegetation and soil removal, blasting, loading, hauling, crushing and screening. The quarry will extend to a depth of approximately 40 feet below the level of FS 3N03. Waste material would also be deposited on-site. Electrical power would be supplied by a diesel generator. The staging area would be set up to accommodate a guard's camper trailer and chemical toilet for the crew. A 20 foot air-sea cargo container (for storage of small tools) and a 500 gallon diesel fuel storage tank would be in the same general location.

During a preliminary environmental analysis, it was determined that an area of Forest Service sensitive plants and their habitat exists on the Right Star limestone area, and that the plants and habitat would be impacted by any developmental alternative. For that reason, it was determined that the proposal could have significant effects on the environment, and an EIS is needed.

The draft EIS is expected to be filed with the Environmental Protection Agency (EPA) and to be available for public review by February 1992. At that time EPA will publish a notice of availability of the draft EIS in the **Federal Register.**

The comment period on the draft EIS will be 45 days from the date that the EPA's notice of availability appears in the **Federal Register.** It is very important that those interested in the management of the north slope of the San Bernardino Mountains participate at that time. To be the most helpful, comments on the draft EIS should be as specific as possible and may address the adequacy of the statement or the merits of the alternatives discussed (see The Council on Environmental Quality Regulations for implementing the procedural provisions of the National Environmental Policy Act at 40 CFR 1503.3). In addition, Federal court decisions have established that reviewers of draft EISs must structure their participation in the environmental review of the proposal so that it is meaningful and alerts an agency to the reviewers' position and contentions, *Vermont Yankee Nuclear Power Corp.* v. *NRDC*, 435 U.S. 519, 553 (1978), and that environmental objections that could have been raised at the draft stage may be waived if not raised until after completion of the final environmental impact statement. *Wisconsin Heritages, Inc.* v. *Harris*, 490 F. Supp. 1334 (E.D. Wis. 1980). The reason for this is to ensure that substantive comments and objections are made available to the Forest Service at a time when it can meaningfully consider them and respond to them in the final.

After the comment period ends on the draft EIS, the comments will be analyzed and considered by the Forest Service in preparing the final environmental impact statement. The final EIS is scheduled to be completed by September 1992. In the final EIS, the Forest Service is required to respond to the comments received (40 CFR 1503.4). The responsible official will consider the comments, responses, environmental consequences discussed in the EIS, and applicable laws, regulations, and policies in making a decision regarding this proposal. The responsible official will document the decision and reasons for the decision in the Record of Decision. That decision will be subject to appeal under 36 CFR 211.18.

DATE: Comments are requested on this notice concerning the scope of the analysis of the draft EIS. Comments must be received within 30 days of the publication date of this notice.

ADDRESS: Submit written comments and suggestions concerning the scope of the analysis to Gene Zimmerman, Forest Supervisor, San Bernardino National Forest, 1824 S. Commercenter Circle, San Bernardino, CA 92408–3430.

FOR FURTHER INFORMATION CONTACT: Direct questions about the proposed action and the preparation of the EIS to George Kenline, Lands and Minerals Officer, Big Bear Ranger District, P.O. Box 290, Fawnskin, CA 92333, phone (714) 866–3437

Dated: August 25, 1991.

Gene Zimmerman,

Forest Supervisor.

[FR Doc. 91–21377 Filed 9–5–91; 8:45 am]

BILLING CODE 3410–11–M

Ketchikan Pulp Company 50-Year Timber Sale Contract, Polk Inlet, Tongass National Forest, Ketchikan Area, Prince of Wales Island

AGENCY: Forest Service, USDA.

ACTION: Notice of intent to prepare an environmental impact statement.

SUMMARY: The Department of Agriculture, Forest Service, will prepare a site-specific Environmental Impact Statement (EIS) as part of its on-going commitment to provide timber to Ketchikan Pulp Company (KPC) under the terms of an existing timber sale contract. The Record of Decision (ROD) will decide how to provide sufficient harvest units, roads, and associated timber harvesting facilities to meet the operational needs of KPC for an estimated 2 to 3-year period. Harvest units will be located within the primary sale area boundaries on Prince of Wales Island.

DATES: Comments concerning the scope of the analysis should be received by October 18, 1991.

ADDRESSES: Written comments and suggestions concerning the scope of the analysis must be sent to Dave

Rittenhouse, Forest Supervisor, Tongass National Forest, Ketchikan Area, Federal Building, Ketchikan, AK 99901.

FOR FURTHER INFORMATION CONTACT: Questions about the proposed action and EIS should be directed to Walter A. Dortch, Planning Staff Officer, Tongass National Forest, Ketchikan Area, Federal Building, Ketchikan, AK 99901; phone (907) 225-3101.

SUPPLEMENTARY INFORMATION: The Agency proposes to authorize harvest of up to 125 MMBF of timber, and to construct roads and facilities necessary to transport this timber to salt water. The authorization is expected to include harvest of approximately 4000 acres of land within Management Areas K17 and K18, and will be made available to KPC, under the terms of the existing long-term timber sale contract, in several offerings.

The Responsible Official for this EIS is the Regional Forester, Michael A. Barton, who must decide on various unit locations and acreage necessary to meet the objectives of the EIS. He will select from a full array of alternatives presented in the EIS, including the alternative of "no action". Site-specific issues for this project are expected to include:

1. Do the harvest units being evaluated in the alternatives provide for an economically viable offering under the terms of the long-term timber sale contract?

2. What are the projected impacts to subsistence users of the land being proposed for timber harvest if harvest is authorized?

3. What are the effects of the harvest of timber and associated road construction on forest resources such as visual quality, fish and wildlife habitat, and upon wildlife species thought to be dependent upon old-growth habitat. Mitigation measures, as well as standards and guidelines for setting harvest units and roads, will be prescribed in the EIS for each harvest unit and road being evaluated.

4. What are the projected cumulative environmental effects resultant from harvesting individual units and roads within these prescriptions? Do these prescriptions provide results consistent with the expectations of the Tongass National Forest Land Management Plan Land Use Designations for the sites being evaluated?

Public participation will be especially important at several points during the analysis. The first point is during the scoping process. The Forest Service will be seeking information, comments, and assistance from Federal, State, and local agencies, and other individuals or organizations who may be interested in, or affected by, the proposed action. This input will be used in preparation of the Draft EIS (DEIS). Scoping is to begin in September 1991. Public meetings are planned for communities on Prince of Wales Island and Ketchikan in October 1991 and August 1992. Subsistence hearings, as provided for in ANILCA, are planned for August 1992. The DEIS should be filed with EPA in July 1992, and the final EIS filed in March 1993.

The comment period on the DEIS will be 45 days from the date the Environmental Protection Agency's notice of availability appears in the **Federal Register**. It is very important that those interested in this proposed action participate at this time. To be the most helpful, comments on the DEIS statement should be as specific as possible, and may address the adequacy of the statement or the merits of the alternatives discussed. (See The Council on Environmental Quality Regulations for implementing the procedural provisions of the National Environmental Policy Act at 40 CFR 1503.3.)

In addition, Federal court decisions have established that reviewers of DEIS statements must structure their participation in the environmental review of the proposal so that it is meaningful and alerts an agency to the reviewer's position and concerns. *Vermont Yankee Nuclear Power Corp.* v. *NRDC*, 435 U.S. 519, 553 (1978). Environmental objections that could have been raised at the draft stage may be waived if not raised until after completion of the final EIS. *City of Angoon* v. *Hodel, Harris* (9th Circuit, 1986), and *Wisconsin Heritages, Inc.* v. *Harris*, 490 F. Supp. 1334, 1338 (E.D. Wis. 1980). The reasons for this is to ensure that substantive comments and objections are made available to the Forest Service at a time when it can meaningfully consider them and respond to them in the final.

Permits required for implementation include the following:

1. U.S. Army Corps of Engineers:

—Approval of the discharge of dredged or fill materials into waters of the United States, under section 404 of the Clean Water Act.

—Approval of the construction of structures or work in navigable waters of the United States, under section 10 of the River and Harbor Act of 1899.

2. Environmental Protection Agency:

—National Pollutant Discharge Elimination System (402) permit.

—Review Spill Prevention Control and Countermeasure Plan.

3. State of Alaska, Department of Natural Resources:

—Tideland Permit and Lease or Easement.

4. State of Alaska, Department of Environmental Conservation:

—Solid Waste Disposal Permit.

—Certification of Compliance with Alaska Water Quality Standards (401 Certification).

Michael A. Barton, Regional Forester, Region 10, Box 21628, Juneau, Alaska 99802, is the responsible official. The responsible official will consider the comments, responses, disclosure of environmental consequences, and applicable laws, regulations, and policies in making a decision regarding this proposal. The responsible official will document the decision and rationale in the ROD.

Dated: August 28, 1991.

Michael A. Barton,

Regional Forester.

[FR Doc. 91-21354 Filed 9-5-91; 8:45 am]

BILLING CODE 3410-11-M

Ketchikan Pulp Company 50-Year Timber Sale Contract, Lab Bay, Tongass National Forest, Ketchikan Area, Prince of Wales Island

AGENCY: Forest Service, USDA.

ACTION: Notice of intent to prepare an environmental impact statement.

SUMMARY: The Department of Agriculture, Forest Service, will prepare a site-specific Environmental Impact Statement (EIS) as part of its on-going commitment to provide timber to Ketchikan Pulp Company (KPC) under the terms of an existing timber sale contract. The Record of Decision (ROD) will decide how to provide sufficient harvest units, roads, and associated timber harvesting facilities to meet the operational needs of KPC for an estimated 2- to 3-year period. Harvest units will be located within the primary sale area boundaries on Prince of Wales Island.

DATES: Comments concerning the scope of the analysis should be received by October 18, 1991.

ADDRESSES: Written comments and suggestions concerning the scope of the analysis must be sent to Dave Rittenhouse, Forest Supervisor, Tongass National Forest, Ketchikan Area, Federal Building, Ketchikan, AK 99901.

FOR FURTHER INFORMATION CONTACT: Questions about the proposed action and EIS should be directed to Walter A. Dortch, Planning Staff Officer, Tongass

National Forest, Ketchikan Area, Federal Building, Ketchikan, AK 99901; phone (907) 225–3101.

SUPPLEMENTARY INFORMATION: The Agency proposes to authorize harvest of up to 85 MMBF of timber, and to construct roads and facilities necessary to transport this timber to salt water. The authorization is expected to include harvest of approximately 3000 acres of land within Management Areas K01, K02, K03, and portions of K03A, which will be made available to KPC, under the terms of the existing long-term timber sale contract, in several offerings.

The Responsible Official for this EIS is the Regional Forester, Michael A. Barton, who must decide on various unit locations and acreage necessary to meet the objectives of the EIS. He will select from a full array of alternatives presented in the EIS, including the alternative of "no action". Site-specific issues for this project are expected to include:

1. Do the harvest units being evaluated in the alternatives provide for an economically viable offering under the terms of the long-term timber sale contract?

2. What are the projected impacts to subsistence users of the land being proposed for timber harvest, if harvest is authorized?

3. What are the effects of the harvest of timber and associated road construction on forest resources such as visual quality, fish and wildlife habitat, and upon wildlife species thought to be dependent upon old-growth habitat. Mitigation measures, as well as standards and guidelines for setting harvest units and roads, will be prescribed in the EIS for each harvest unit and road being evaluated.

4. What are the projected cumulative environmental effects resultant from harvesting individual units and roads within these prescriptions? Do these prescriptions provide results consistent with the expectations of the Tongass National Forest Land Management Plan Land Use Designations for the sites being evaluated?

Public participation will be especially important at several points during the analysis. The first point is during the scoping process. The Forest Service will be seeking information, comments, and assistance from Federal, State, and local agencies, and other individuals or organizations who may be interested in, or affected by, the proposed action. This input will be used in preparation of the Draft EIS (DEIS). Scoping is to begin in September 1991. Public meetings are planned for communities on Prince of Wales Island and Ketchikan in October 1991 and August 1992. Subsistence hearings, as provided for in ANILCA, are planned for August 1992. The DEIS should be filed with EPA in July 1992, and the final EIS filed in March 1993.

The comment period on the DEIS will be 45 days from the date the Environmental Protection Agency's Notice of Availability appears in the **Federal Register**. It is very important that those interested in this proposed action participate at this time. To be the most helpful, comments on the DEIS statement should be as specific as possible, and may address the adequacy of the statement or the merits of the alternatives discussed. (See The Council on Environmental Quality Regulations for implementing the procedural provisions of the National Environmental Policy Act at 40 CFR 1503.3).

In addition, Federal court decisions have established that reviewers of DEIS statements must structure their participation in the environmental review of the proposal so that it is meaningful and alerts an agency to the reviewer's position and concerns. *Vermont Yankee Nuclear Power Corp.* v. *NRDC*, 435 U.S. 519, 553 (1978). Environmental objections that could have been raised at the draft stage may be waived if not raised until after completion of the final EIS. *City of Angoon* v. *Hodel, Harris*, (9th Circuit, 1986), and *Wisconsin Heritages, Inc.* v. *Harris*, 490 F. Supp. 1334, 1338 (E.D. Wis. 1980). The reason for this is to ensure that substantive comments and objections are made available to the Forest Service at a time when it can meaningfully consider them and respond to them in the final.

Permits required for implementation include the following:

1. U.S. Army Corps of Engineers:
—Approval of the discharge of dredged or fill materials into waters of the United States, under Section 404 of the Clean Water Act.
—Approval of the construction of structures or work in navigable waters of the United States, under Section 10 of the River and Harbor Act of 1899.

2. Environmental Protection Agency:
—National Pollutant Discharge Elimination System (402) permit.
—Review Spill Prevention Control and Countermeasure Plan.

3. State of Alaska, Department of Natural Resources:
—Tideland Permit and Lease or Easement.

4. State of Alaska, Department of Environmental Conservation:
—Solid Waste Disposal Permit.
—Certification of Compliance with Alaska Water Quality Standards (401 Certification).

Michael A. Barton, Regional Forester, Region 10, Box 21628, Juneau, Alaska 99802, is the responsible official. The responsible official will consider the comments, responses, disclosure of environmental consequences, and applicable laws, regulations, and policies in making a decision regarding this proposal. The responsible official will document the decision and rationale in the ROD.

Dated: August 28, 1991.

Michael A. Barton,

Regional Forester.

[FR Doc. 91–21355 Filed 9–5–91; 8:45 am]

BILLING CODE 3410–11–M

Soil Conservation Service

McCoy Wash Watershed Project, California

AGENCY: Soil Conservation Service, USDA.

ACTION: Notice of availability of a record of decision.

SUMMARY: Pearlie S. Reed, responsible Federal official for projects administered under the provisions of Public Law 83–566, 16 U.S.C. 1001–1008, in the state of California, is hereby providing notification that a record of decision to proceed with the installation of the McCoy Wash Wastershed Project is available. Single copies of this record of decision may be obtained from Pearlie S. Reed, at the address shown below.

FOR FURTHER INFORMATION CONTACT: Pearlie S. Reed, State Conservationist, Soil Conservation Service, 2121–C Second Street, Davis, CA 95616, telephone (916) 449–2861.

(This activity is listed in the Catalog of Federal Domestic Assistance under No. 10.904—Watershed Protection and Flood Prevention—and is subject to the provisions of executive Order 12372, which requires intergovernmental consultation with State and local officials.)

Dated: August 28, 1991.

Jay Collins,

Assistant State Conservationist.

[FR Doc. 91–21378 Filed 9–5–91; 8:45 am]

BILLING CODE 3410–16–M

DEPARTMENT OF COMMERCE

Bureau of Export Administration

Computer Systems Technical Advisory Committee; Partially Closed Meeting

A meeting of the Computer Systems Technical Advisory Committee will be held September 25 & 26, 1991, in the Herbert C. Hoover Building, room 1617F, 14th & Pennsylvania Avenue, NW., Washington, DC. On September 25, the Executive Session will convene at 9 a.m. and adjourn at 10 a.m. The General Session will convene at 10 a.m. and adjourn at 5 p.m. On September 26, the General Session will convene at 9 a.m. and adjourn at 12 p.m. The Executive Session will convene at 1 p.m. and adjourn at 3 p.m. The Committee advises the Office of Technology and Policy Analysis with respect to technical questions that affect the level of export controls applicable to computer systems/peripherals or technology.

Agenda

Executive Session

September 25, 1991, 9 a.m.–10 a.m.

1. Discussion of matters properly classified under Executive Order 12356, dealing with the U.S. and COCOM control program and strategic criteria related thereto.

General Session

September 25, 1991, 10 a.m.–5 p.m.

2. Opening remarks by the Chairman.
3. Presentation of papers or comments by the public.
4. Presentation by Tektronix, Inc. on workstations.
5. Discussion of hardware controls.
6. Discussion of Composite Theoretical Performance (CTP) calculation.
7. Presentation by Sun Microsystems on Reduced Instruction Set Computing (RISC) technology.
8. Discussion of technical data/software controls.
9. Presentation by IBM Corporation and U.S. West Communications on Fiber-Optic Distributed Data Interchange (FDDI) technology.
10. Discussion of data communications.

General Session

September 26, 1991, 9 a.m.–12 p.m.

1. Discussion of structure and implementation of supercomputer control regime.
2. Discussion of implementation of Control List Category 4 (Computers).

Executive Session

September 26, 1991, 1 p.m.–3 p.m.

3. Discussion of matters properly classified under Executive Order 12356, dealing with the U.S. and COCOM control program and strategic criteria related thereto.

The General Sessions of the meeting will be open to the public and a limited number of seats will be available. To the extent that time permits, members of the public may present oral statements to the Committee. Written statements may be submitted at any time before or after the meeting. However, to facilitate distribution of public presentation materials to the Committee members, the Committee suggests that presenters forward the public presentation materials two weeks prior to the meeting date to the following address: Lee Ann Carpenter, Technical Support Staff, OTPA/BXA, room 1621, U.S. Department of Commerce, 14th & Pennsylvania Ave., NW., Washington, DC 20230.

The Assistant Secretary for Administration, with the concurrence of the General Counsel, formally determined on January 5, 1990, pursuant to section 10(d) of the Federal Advisory Committee Act, as amended, that the series of meetings of the Committee and of any Subcommittees thereof, dealing with the classified materials listed in 5 U.S.C., 552b(c)(1) shall be exempt from the provisions relating to public meetings found in section 10(a)(1) and (a)(3), of the Federal Advisory Committee Act. The remaining series of meetings or portions thereof will be open to the public.

A copy of the Notice of Determination to close meetings or portions of meetings of the Committee is available for public inspection and copying in the Central Reference and Records Inspection Facility, room 6628, U.S. Department of Commerce, Washington, DC 20230. For further information or copies of the minutes, contact Lee Ann Carpenter on (202) 377–2583.

Dated: August 28, 1991.

Betty Anne Ferrell,

Director, Technical Advisory Committee Unit.

[FR Doc. 91–21398 Filed 9–5–91; 8:45 am]

BILLING CODE 3510–DT–M

Semiconductor Technical Advisory Committee; Closed Meeting

A meeting of the Semiconductor Technical Advisory Committee will be held September 26, 1991 at 9 a.m., in the Herbert C. Hoover Building, room 3407, 14th Street and Constitution Avenue NW., Washington, DC. The Committee advises the Office of Technology and Policy Analysis with respect to technical questions which affect the level of export controls applicable to semiconductors related equipment or technology.

The Committee will meet only in Executive Session to discuss matters properly classified under Executive Order 12356, dealing with the U.S. and COCOM control program and strategic criteria related thereto.

The Assistant Secretary for Administration, with the concurrence of the delegate of the General Counsel, formally determined on January 5, 1990, pursuant to section 10(d) of the Federal Advisory Committee Act, as amended, that the series of meetings or portions of meetings of the Committee and of any Subcommittees thereof, dealing with the classified materials listed in 5 U.S.C. 552b(c)(1) shall be exempt from the provisions relating to public meetings found in section 10 (a)(1) and (a)(3), of the Federal Advisory Committee Act. The remaining series of meetings or portions thereof will be open to the public.

A copy of the Notice of Determination to close meetings or portions of meetings of the Committee is available for public inspection and copying in the Central Reference and Records Inspection Facility, room 6628, U.S. Department of Commerce, Washington, DC. For further information, call Ruth D. Fitts at 202–377–4959.

Dated: August 26, 1991.

Betty A. Ferrell,

Director, Technical Advisory Committee Unit, Office of Technology and Policy Analysis.

[FR Doc. 91–21399 Filed 9–5–91; 8:45 am]

BILLING CODE 3510–DT–M

Telecommunications Equipment, Technical Advisory Committee; Partially Closed Meeting

A meeting of the Telecommunications Equipment Technical Advisory Committee will be held September 25, 1991, 9:30 a.m., in the Herbert C. Hoover Building, room 1092, 14th & Pennsylvania Avenue, NW., Washington, DC. The Committee advises the Office of Technology and Policy Analysis with respect to technical questions that affect the level of export controls applicable to telecommunications and related equipment and technology.

Agenda

General Session

1. Opening remarks by the Chairman.
2. Approval of minutes.
3. Presentation of papers or comments by the public.
4. Report on status of Core List.
5. Report on status of U.S. implementation of Core List.

Executive Session

6. Discussion of matters properly classified under Executive Order 12356,

dealing with the U.S. and COCOM control program and strategic criteria related thereto.

The General Session of the meeting will be open to the public and a limited number of seats will be available. To the extent that time permits, members of the public may present oral statements to the Committee. Written statements may be submitted at any time before or after the meeting. However, to facilitate distribution of public presentation materials to the Committee members, the Committee suggests that presenters forward the public presentation materials two weeks prior to the meeting date to the following address: Lee Ann Carpenter, Technical Support Staff, OTPA/BXA, room 1621, U.S. Department of Commerce, 14th & Pennsylvania Ave., NW., Washington, DC 20230.

The Assistant Secretary for Administration, with the concurrence of the General Counsel, formally determined on January 5, 1990, pursuant to section 10(d) of the Federal Advisory Committee Act, as amended, that the series of meetings of the Committee and of any Subcommittees thereof, dealing with the classified materials listed in 5 U.S.C. 552b(c)(1) shall be exempt from the provisions relating to public meetings found in section 10(a)(1) and (a)(3), of the Federal Advisory Committee Act. The remaining series of meetings or portions thereof will be open to the public.

A copy of the Notice of Determination to close meetings or portions of meetings of the Committee is available for public inspection and copying in the Central Reference and Records Inspection Facility, room 6628, U.S. Department of Commerce, Washington, DC 20230. For further information or copies of the minutes, contact Lee Ann Carpenter on (202) 377-2583.

Dated: August 26, 1991.

Betty Anne Ferrell,

Director, Technical Advisory Committee Unit.

[FR Doc. 91-21400 Filed 9-5-91; 8:45 am]

BILLING CODE 3510-DT-M

International Trade Administration

[A-583-023]

Final Results of Antidumping Duty Administrative Review: Clear Sheet Glass From Taiwan

AGENCY: Import Administration, International Trade Administration, Commerce.

EFFECTIVE DATE: September 6, 1991.

FOR FURTHER INFORMATION CONTACT: Vincent Kane or Susan Strumbel, Investigations, Import Administration, International Trade Administration, U.S. Department of Commerce, 14th Street and Constitution Avenue, NW., Washington, DC, 20230; telephone: (202) 377-2815 and 377-1442, respectively.

Final Results

Case History

On July 3, 1991, the Department of Commerce (the Department) published in the **Federal Register** (56 FR 30554) the preliminary results of its administrative review of the antidumping duty finding on clear sheet glass from Taiwan. This review covers Hsinchu Glass Works, Inc. (Hsinchu), Taiwan Glass Industries, Corp. (Taiwan Glass), and Yotak Trading Co., Ltd. (Yotak), three manufacturers and/or exporters, and Israel International Trade Company, Ltd. (Israel International), a third-country reseller of clear sheet glass to the United States, during the period of review, August 1, 1989, through July 31, 1990.

The Department has now completed this administrative review in accordance with section 751 of the Tariff Act of 1930, as amended (the Act).

Scope of Review

The product covered by this review is clear sheet glass. Clear sheet glass is currently classifiable under subheadings 7004.90.25 through 7004.90.40 of the Harmonized Tariff Schedule (HTS). Although the HTS subheadings are provided for convenience and customs purposes, our written description of the scope of this proceeding is dispositive.

Use of Best Information Available

In deciding what to use as best information available, § 353.37(b) of the Department's regulations provides that the Department may take into account whether a party fails to provide requested information. When a company fails to provide the information requested in a timely manner, or otherwise significantly impedes the Department's review, the Department generally assigns to that company the higher of: (a) The highest calculated rate for a responding firm with shipments during the period or (b) the highest rate for any firm from any review period.

Final Results of the Review

Interested parties were invited to comment on the preliminary results. We received no comments. For our final results, we have determined that the appropriate rate for Hsinchu is that firm's own rate for the period in which it most recently had shipments. For the remaining firms, we determined that the highest rate assigned to any firm in any review appropriate, since these firms did not respond to the antidumping questionnaire. After full consideration of the facts in this case, we have decided that use of a firm's own last rate for firms not responding would tend to encourage firms not to respond under certain circumstances.

Therefore, in contrast to our preliminary results, we have used the highest rate for any firm as the best information available for our final results. This approach is consistent with the Department's new policy for dealing with firms that refuse to cooperate with the Department or otherwise significantly impede the proceedings. (See Antifriction Bearings (Other Than Tapered Roller Bearings) and Parts Thereof from the Federal Republic of Germany, et al; Final Results of Antidumping Administrative Review, 56 FR 31692, 31705, July 11, 1991.)

	Margin percentage
Manufacturers/Producers/Exporters	
Hsinchu Glass Works, Inc.	*14.88
Taiwan Glass Corporation	**14.88
Yotak Trading Company	**14.88
All Others	14.88
Third-Country Reseller (country)	
Israel International Trade Co. Ltd. (Israel)	**14.88

*No shipments during the review period.
**Based on best information available.

Accordingly, the Department will instruct the Customs Service to assess antidumping duties on all appropriate entries. The Department will issue appraisement instructions for each exporter directly to the Customs Service.

The following deposit requirements will be effective upon publication of these final results of administrative review for all shipments of clear sheet glass from Taiwan that are entered, or withdrawn from warehouse, for consumption on or after the publication date, as provided by section 751(a)(1) of the Act; (1) The cash deposit rate for the reviewed companies will be that established in the final results of these reviews; for merchandise exported by manufacturers or exporters not covered in these reviews but covered in a prior review, the cash deposit rate will continue to be the rate published in the final results of the last administrative review for these firms; (2) the cash deposit rate for all other exporters/producers will be 14.88 percent. This is the highest non-BIA rate for any firm included in this review. The deposit

requirements, when imposed, shall remain in effect until publication of the final results of the next administrative review.

This administrative review and notice are in accordance with section 751(a)(1) of the Act and 19 CFR 353.22(c)(5).

Dated: August 30, 1991.

Marjorie A. Chorlins,

Acting Assistant Secretary for Import Administration.

[FR Doc. 91-21401 Filed 9-5-91; 8:45 am]

BILLING CODE 3510-OS-M

President's Export Council: Meeting of the President's Export Council

AGENCY: International Trade Administration, Commerce.

ACTION: Notice of a partially closed meeting.

SUMMARY: The Foreign Market Development Subcommittee of the President's Export Council is holding a partially closed meeting. The closed session will include briefings and discussion on relations with our trading partners and other sensitive matters properly classified under Executive Order 12356. The briefings and discussion in open session will cover ways to promote the development of trade promotion programs in various world markets and issues of trade cooperation throughout the Americas. The President's Export Council was established on December 20, 1973, and reconstituted May 4, 1979, to advise the President on matters relating to U.S. export trade.

A Notice of Determination to close meetings or portions of meetings of the Council to the public on the basis of 5 U.S.C. 5522b(c)(1) has been approved in accordance with the Federal Advisory Committee Act. A copy of the notice is available for public inspection and copying in the Central Reference and Records Inspection Facility, room 6628, U.S. Department of Commerce, 202-377-4217.

DATES: September 19, 1991, Closed Session from 9 a.m. to 10 a.m., Open Session from 10 a.m. to 12 p.m.

ADDRESSES: Main Commerce Building, room 6029, 14th Street and Constitution Avenue, NW., Washington, DC 20230. Seating is limited and will be on a first come, first served basis.

FOR FURTHER INFORMATION CONTACT: Ms. Sylvia Lino Prosak, President's Export Council, room 3215, Washington, DC 20230.

Dated: September 3, 1991.

Wendy H. Smith,

Staff Director and Executive Secretary, President's Export Council.

[FR Doc. 91-21478 Filed 9-5-91; 8:45 am]

BILLING CODE 3510-DR-M

National Oceanic and Atmospheric Administration

Public Hearing on the Draft Environmental Impact Statement and Draft Management Plan for the Proposed Delaware National Estuarine Research Reserve

AGENCY: Sanctuaries and Reserves Division, Office of Ocean and Coastal Resource Management, National Ocean Service, National Oceanic and Atmospheric Administration, U.S. Department of Commerce.

ACTION: Public hearing notice.

SUMMARY: Notice is hereby given that the Sanctuaries and Reserves Division, of the Office of Ocean and Coastal Resource Management (OCRM), National Ocean Service (NOS), National Oceanic and Atmospheric Administration (NOAA), U.S. Department of Commerce, will hold a public hearing for the purpose of receiving comments on the Draft Environmental Impact Statement and Draft Management Plan (DEIS/DMP) prepared on the proposed designation of the Delaware National Estuarine Research Reserve. The DEIS and Draft Management Plan addresses research, monitoring, education and resource protection needs for the proposed reserve.

The Office of Ocean and Coastal Resource Management will hold a public hearing at 7 p.m. on Monday, September 23, 1991 at the Fraternal Order of Police Kitts Hummock Lodge on Kitts Hummock Road, County Road 68, 1½ miles east of Route 9 and located on the south side of County Road 68, in Dover, Delaware.

The views of interested persons and organizations on the adequacy of the DEIS/DMP are solicited, and may be expressed orally and/or in written statements. Presentations will be scheduled on a first-come, first-heard basis, and may be limited to a maximum of five (5) minutes. The time allotment may be extended before the hearing when the number of speakers can be determined. All comments received at the hearing will be considered in the preparation of the Final Environmental Impact Statement (FEIS) and Draft Management Plan.

The comment period for the DEIS/DMP will end on Monday, October 7, 1991. All written comments received by this deadline will be included in the FEIS.

FOR FURTHER INFORMATION CONTACT: Cheryl A. Graham, (202) 606-4122, Sanctuaries and Reserves Division, Office of Ocean and Coastal Resource Management, National Ocean Service, NOAA, 1825 Connecticut Avenue, NW., room 714, Washington, DC 20235. Copies of the Draft Environmental Impact Statement/Draft Management Plan are available upon request to the Sanctuaries and Reserves Division.

Federal Domestic Assistance Catalog Number 11.420.

Coastal Zone Management Estuarine Sanctuaries.

John J. Carey,

Acting Assistant Administrator for Ocean Services and Coastal Zone Management.

Dated: August 30, 1991.

[FR Doc. 91-21356 Filed 9-5-91; 8:45 am]

BILLING CODE 3510-08-M

Gulf of Mexico Fishery Management Council; Public Meetings

AGENCY: National Marine Fisheries Service, NOAA, Commerce.

The Gulf of Mexico Fishery Management Council will hold a public meeting of its Reef Fish Advisory panel (RFAP) on September 9-10, 1991, at the Holiday Inn—New Orleans I-10 Hotel, 6401 Veterans Boulevard, Metairie, Louisiana. The meeting will begin on September 9 at 1 p.m. and recess at 5 p.m. The meeting will be reconvened on September 10 at 8 a.m., and adjourn at 12 p.m.

The purpose of the meeting will be to review draft Amendment #4 to the Reef Fish Fishery Management Plan. The draft amendment proposes to: (1) Place a five-year moratorium on the issuance of any additional federal permits to commercially harvest snapper or grouper; (2) to combine shallow-water and deep-water grouper quotas into a single annual quota; (3) to apply size limits to lesser amberjacks; and (4) develop technical revisions to the framework measure for setting total allowable catch. The Advisory Panel will review the amendment and develop recommendations on these issues for the Gulf of Mexico Fishery Management Council.

For more information contact Douglas R. Gregory, Gulf of Mexico Fishery Management Council, 5401 West Kennedy Boulevard, suite 881, Tampa, FL; telephone: 813-228-2815.

Dated: August 30, 1991.

David S. Crestin,

Director, Office of Fisheries Conservation and Management, National Marine Fisheries Service.

[FR Doc. 91-21338 Filed 9-5-91; 8:45 am]

BILLING CODE 3510-22-M

COMMITTEE FOR PURCHASE FROM THE BLIND AND OTHER SEVERELY HANDICAPPED

Procurement List; Additions and Deletions

AGENCY: Committee for Purchase from the Blind and Other Severely Handicapped.

ACTION Additions to and deletions from Procurement List.

SUMMARY: This action adds to and deletes from the Procurement List commodities to be produced and services to be provided by workshops for the blind or other severely handicapped.

EFFECTIVE DATE: October 7, 1991.

ADDRESSES: Committee for Purchase from the Blind and Other Severely Handicapped, Crystal Square 5, suite 1107, 1755 Jefferson Davis Highway, Arlington, Virginia 22202-3509.

FOR FURTHER INFORMATION CONTACT: Beverly Milkman (703) 557-1145.

SUPPLEMENTARY INFORMATION: On July 8 and 19, 1991, the Committee for Purchase from the Blind and Other Severely Handicapped published notices (56 FR 30905/6 and 33264/5) of proposed additions to and deletions from the Procurement List:

Additions

After consideration of the material presented to it concerning capability of qualified workshops to provide the services at a fair market price and impact of the additions on the current or most recent contractors, the Committee has determined that the services listed below are suitable for procurement by the Federal Government under 41 U.S.C. 46-48C and 41 CFR 51-2.6.

I certify that the following actions will not have a significant impact on a substantial number of small entities. The major factors considered for this certification were:

a. The actions will not result in any additional reporting, recordkeeping or other compliance requirements.

b. The actions will not have a serious economic impact on any contractors for the services listed.

c. The actions will result in authorizing small entities to provide the services procured by the Government.

Accordingly, the following services are hereby added to the Procurement List:

Services

Food Service Attendant, Naval Education Training Center, Newport, Rhode Island.

Janitorial/Custodial, Federal Building and Courthouse, Centre, Alabama.

Janitorial/Custodial, Federal Building and Social Security, Administration Building, Gadsden, Alabama.

Janitorial/Custodial, Federal Building, 105 South Sixth Street, Mount Vernon, Illinois.

Janitorial/Custodial, Paterson Federal Building, Ward and Clark Streets, Paterson, New Jersey.

Janitorial/Custodial for the following Bismarck, North Dakota locations:

Bismarck District Office, 707 North Bismarck Expressway.

Bismarck Warehouse Garage, 700 North Bismarck Expressway.

Janitorial/Custodial, Naval and Marine Corps Reserve Center, Building 540, Vienna, Ohio.

This action does not affect contracts awarded prior to the effective date of this addition or options exercised under those contracts.

Deletions

After consideration of the relevant matter presented, the Committee has determined that the commodities listed below are no longer suitable for procurement by the Federal Government under 41 U.S.C. 46-48c and 41 CFR 51-2.6. Accordingly, the following commodities are hereby deleted from the Procurement List:

Paper, Teletypewriter Roll,
7530-00-223-7969,
7530-00-286-5030,
7530-00-721-9691.

Beverly L. Milkman,

Executive Director.

[FR Doc. 91-21370 Filed 9-5-91; 8:45 am]

BILLING CODE 6820-33-M

Procurement List; Proposed Additions and Deletion

AGENCY: Committee for Purchase from the Blind and Other Severely Handicapped.

ACTION: Proposed additions to and deletion from Procurement List.

SUMMARY: The Committee has received proposals to add to and delete from the Procurement List commodities and a service to be furnished by nonprofit agencies employing the blind and other severely Handicapped.

COMMENTS MUST BE RECEIVED ON OR BEFORE: October 7, 1991.

ADDRESSES: Committee for Purchase from the Blind and Other Severely Handicapped, Crystal Square 5, suite 1107, 1755 Jefferson Davis Highway, Arlington, Virginia 22202-3509.

FOR FURTHER INFORMATION CONTACT: Beverly Milkman (703) 557-1145.

SUPPLEMENTARY INFORMATION: This notice is published pursuant to 41 U.S.C. 47(a)(2) and 41 CFR 51-2.6. Its purpose is to provide interested persons an opportunity to submit comments on the possible impact of the proposed actions.

Additions

If the Committee approves the proposed additions, all entities of the Federal Government (except as otherwise indicated) will be required to procure the commodities and service listed below from nonprofit agencies employing the blind or other severely handicapped.

It is proposed to add the following commodities and service to the Procurement List:

Commodities

Line, Multi-Loop

1670-01-064-4453

Bag, Waterproof

4240-00-803-5839

Loop, Kevlar

5340-00-NSH-0008
(Requirements of the Navy Ships Parts Control Center, Mechanicsburg, PA)

Link, Quick Release

5340-00-NSH-0009
(Requirements of the Navy Ships Parts Control Center, Mechanicsburg, PA)

Spacer, Sleeve

5365-01-138-6660

Folder, File

7530-00-220-4308
(Requirements for Fort Worth, Texas, Belle Mead & Burlington, New Jersey and Palmetto, Georgia depots only)
7530-00-281-5938
7530-00-281-5939
7530-00-281-5940
7530-00-285-5879
7530-00-286-6978
7530-00-456-6140
7530-00-531-7809
7530-00-881-2957
7530-00-926-8974
7530-00-926-8977
7530-00-926-8979

Brush, Cleaning, Aircraft

7920-00-054-7768

Service

Janitorial/Custodial

Federal Building and U.S. Court of Appeals New Orleans, Louisiana

Deletions

It is proposed to delete the following commodity from the Procurement List:

Commodity

Belt, High Visibility

8465–01–163–8835

Beverly L. Milkman,

Executive Director.

[FR Doc. 91–21371 Filed 9–5–91; 8:45 am]

BILLING CODE 6820–33–M

DEPARTMENT OF DEFENSE

Department of the Air Force

Record of Decision for the Realignment of March AFB, CA

On August 27, 1991 the Air Force issued the Record of Decision for the Realignment of March AFB, California.

This Record of Decision documents the Air Force's decisions for the realignment of March AFB, California based upon review and consideration of the environmental impacts identified in the Final Environmental Impact Statement, dated July 1991.

The Record of Decision discusses how March AFB will be realigned and commits the Air Force to completing specific mitigation actions designed to minimize any adverse environmental impacts associated with realignment actions.

Questions regarding this Record of Decision should be directed to: HQ SAC/DEVP Offutt AFB NE 68113–5001, attn: Ms. Deanna Meyer-Pietruszka, telephone (402) 294–3684.

Patsy J. Conner,

Air Force Federal Register Liaison Officer.

[FR Doc. 91–21313 Filed 9–5–91; 8:45 am]

BILLING CODE 3910–01–M

DEPARTMENT OF ENERGY

Request for Public Review and Comment on a Preliminary Design Report: A Priority System for Environmental Restoration

AGENCY: U.S. Department of Energy (DOE).

ACTION: Request for public review of and comment on a Preliminary Design Report: A Priority System for Environmental Restoration.

SUMMARY: The Department of Energy (DOE) has been developing, in consultation with external review groups, a system for setting priorities in its Environmental Restoration (ER) program. The ER program directs studies and activities to clean up contamination at DOE sites. This work is being conducted with the goal of completing cleanup of all DOE sites by the year 2019.

The priority system discussed in the Preliminary Design Report is a formal decision-aiding tool designed to help ensure that DOE's funding decisions reflect the primary objectives of protecting public health and the environment and complying with regulatory requirements and agreements; and that these funding decisions make the best possible use of limited financial and human resources based on facts and objective criteria.

Although some aspects of the priority system are still being developed, DOE's views regarding the system's basic purposes, structure, and uses have been formulated and are discussed in the Preliminary Design Report.

DOE is continuing research and discussion to resolve the outstanding issues, and is seeking public review and comment on the system's development to date.

INVITATION TO COMMENT: The external review groups that previously provided input for development of the priority system include a Technical Peer Review Group and groups composed of representatives from States, Tribes, and national environmental organizations. DOE is organizing a National Workshop for public participation and has requested a committee of the National Research Council of the National Academy of Sciences to review the system. DOE is also seeking comments from the general public and other interested groups. A list of specific issues on which DOE is particularly interested in receiving comments on will be provided with copies of the Preliminary Design Report.

DATES: Written comments should be postmarked by November 5, 1991 to ensure consideration. Comments received after that date will be considered to the extent practicable.

ADDRESSES AND FURTHER INFORMATION: Copies of the Preliminary Design Report, a list of specific issues, and an earlier report entitled A Preliminary Conceptual Design of a Formal Priority System for Environmental Restoration, are available for reading at the following Department of Energy Public Reading Rooms:

U.S. Department of Energy, Headquarters, room 1E–190, 1000 Independence Avenue, SW., Washington, DC 20585.

Albuquerque Operations Office, U.S. Department of Energy, National Atomic Energy Museum, Building 20358, Kirtland Air Force Base, Wyoming Boulevard, Albuquerque, NM 87115.

U.S. Department of Energy, Amarillo Area office, P.O. Box 30030, Amarillo, TX 79120.

Chicago Operations Office, U.S. Department of Energy, 9800 South Cass Avenue, Argonne, IL 60439.

Idaho National Engineering Laboratory, Pocatello Office, 215 North 9th, Pocatello, ID 83201.

Idaho National Engineering Laboratory, Twin Falls Office, 1061 Blue Lakes Boulevard, North, suite 106, Twin Falls, ID 83001.

Idaho Operations Office, U.S. Department of Energy, 1776 Science Center Drive, Idaho Falls, ID 83402.

Nevada Operations Office, U.S. Department of Energy, 2753 South Highland Avenue, Las Vegas, NV 89192–8518.

Oak Ridge Operations Office, U.S. Department of Energy, 200 Administration Road, Oak Ridge, TN 37831–8510.

Richland Operations Office, U.S. Department of Energy, 825 Jadwin Avenue, Richland, WA 99352.

Rocky Flats Public Reading Room, Front Range Community College, 3645 West 112th Avenue, Westminster, CO 80030.

San Francisco Operations Office, U.S. Department of Energy, 1333 Broadway, Oakland, CA 94612.

Savannah River Operations Office, U.S. Department of Energy, Gregg-Granite Library, University of South Carolina-Aiken, 171 University Parkway, Aiken, SC 29801.

Comments, questions, and requests for copies of the above-mentioned documents should be addressed to: Gale P. Turi, Environmental Restoration Program (EM–433), U.S. Department of Energy, 1000 Independence Avenue, SW, Washington, DC 20585–0002, Phone (301) 353–8118.

SUPPLEMENTARY INFORMATION:

I. Background
II. Purpose
III. System Development
IV. Report Outline
V. Conclusion

I. Background

For over 45 years, DOE and its predecessor agencies have managed a broad range of programs, primarily producing nuclear materials and weapons for the national defense and

conducting energy research and development activities at facilities in 30 States. Operations at these facilities have resulted in hundreds, perhaps thousands, of contaminated sites. DOE is committed to cleaning up these sites over a 30-year period. The cleanup is expected to cost tens of billions of dollars. Even if funding were unlimited, technical, managerial, and physical realities place a limit on the rate at which progress can be made. DOE must reconcile these limitations with the desires of numerous States and Tribes, the U.S. Environmental Protection Agency (EPA), private interests, and local communities to obtain the fastest possible action.

In 1989, DOE consolidated management responsibility for waste management and cleanup activities by creating a new Office of Environmental Restoration and Waste Management. This Office manages corrective activities, waste management operations, environmental restoration, and technology development. The priority system is designed for application to environmental restoration activities.

II. Purpose

Given the competing desires of various interests to obtain action quickly, and DOE's obligation to use limited public resources wisely and effectively, there is a need for a systematic, rational, and objective approach to budgeting for environmental cleanup. To meet this need, DOE is developing the priority system described in the Preliminary Design Report. The priority system's function is to classify, rank, group, compare, and analyze proposed cleanup activities on the basis of their ability to achieve the desired objectives: Protecting public health and the environment and complying with regulatory requirements.

III. System Development

The priority system is being developed in consultation with a wide range of outside parties, including State and Tribal governments, national associations, representatives of national environmental groups, the EPA, and independent technical experts. A team of DOE personnel first reviewed existing priority setting and budget allocation systems and methodologies. The review of existing systems showed that none could meet all of DOE's goals for the system or incorporate all the necessary factors. Therefore, the team decided to develop a system combining necessary and useful elements from several existing methods and designs.

The resulting system is described in A Preliminary Conceptual Design of a Formal Priority System for Environmental Restoration (DOE 1990).

The conceptual design was used in two ways during 1990. First, those parts of the system that could be developed quickly were used as an interim system in the development of the Department's Fiscal Year (FY) 1992 budget request. Second, the report describing the design was used as the focus of further discussions with outside parties regarding development of the priority system. The experience gained from applying the interim priority system to the FY 1992 budget process and the comments made by outside parties have provided the basis for developing the revised priority system described in the Preliminary Design Report.

Congress suggested that DOE develop a cleanup priority system that includes a method to weigh the relative importance of health risks, environmental protection, regulatory requirements, socioeconomic impacts, and cost minimization. A progress report concerning priority system development was submitted to Congress on April 14, 1991 in response to Congressional request in Senate Report Number 101–378. The priority system as currently revised is being used in the FY 1993 budget process. Simultaneously, the general public, external groups, and DOE personnel are being asked to review the system. DOE will consider all timely comments, and intends to publish a final version of the priority system in the fall of 1991.

IV. Report Outline

Part I of the report describes the scope and structure of the priority system, and DOE's environmental management organization, planning, and budget processes. The report explains how the priority system fits into those processes; i.e., it indicates the specific budgeting and management decisions that are aided by the priority system and outlines the limitations of the system.

Part II provides an overview of the priority system. It defines key terms and explains the four operating phases of the system:

(1) Classifying and ranking activities at each installation,

(2) Generating budget cases based on the activity ranking,

(3) Evaluating the budget cases, and

(4) Analyzing budget and funding allocation.

Part III describes in detail each step in the system's operation. It provides examples of worksheets used to develop key inputs for the system and explains the mathematical and computer analyses that underlie the system.

The major steps in the system's operation are as follows:

(1) Identify and Classify Target-Year Activities

Field office ER program managers identify desirable target-year activities for each installation and group activities into three priority classes: Priority Class 1—emergency activities; Priority Class 2—time-critical activities; Priority Class 3—other high-benefit and time-sensitive activities.

(2) Rank Target-Year Activities

Field office program managers evaluate Priority Class 3 activities and then rank them according to their estimated priority, by whatever method they deem reasonable.

(3) Define Maximum Budget Cases

For each installation, DOE field office program managers identify a maximum budget case, the largest set of activities that the installation can effectively undertake during the target year.

(4) Define Minimum Budget Cases

For each installation, field office program managers define a minimum budget case representing the minimum-cost set of target-year activities that must be conducted at the installation, including all activities identified in Step 1 as falling into Priority Class 2 (time-critical). By definition, emergency activities will not be known in advance and are not subject to the funding process prior to occurrence.

(5) Define Intermediate Budget Cases

For each installation, field office program managers define one or more additional budget cases with costs between the minimum and maximum cases.

(6) Develop Preliminary Cost Estimates for Budget Cases

For each budget case, field office program managers estimate the direct and indirect costs of all the activities in the case.

(7) Score Budget Cases

Field office program managers use quantitative performance scales to score each case on the basis of how well it meets each of the six ER funding objectives described in the Preliminary Design Report.

(8) Perform Quality Assurance and Finalize Scores and Costs

Field office scores and costs for the budget cases are reviewed and revised,

if necessary, in a process directed by DOE headquarters.

(9) Scale, Weight, and Aggregate Scores To Obtain Overall Evaluations

DOE Headquarters managers use a mathematical formula described in the Preliminary Design Report which incorporates value judgments to combine the separate scores on each performance scale into an overall measure of the "net utility" or benefits for each budget case.

(10) Compute Overall Budget Levels and Funding Allocations That Maximize Benefit

For each possible overall budget level, a computer program determines which of the many possible allocations of that budget among the installations would produce the maximum benefit.

(11) Perform Sensitivity Analysis

The computer program is used to assess the sensitivity of the budget analysis results to changes in the various underlying assumptions and judgments in the computer program.

V. Conclusion

DOE's Office of Environmental Restoration welcomes comments on the Preliminary Design Report and appreciates the time and effort expended by members of the public and review groups in contributing to this final phase of the priority system's development. DOE will consider the public's views before finalizing the priority system.

Issued in Washington, DC, this —th day of August 1991.

Paul D. Grimm,

Deputy Director, Office of Environmental Restoration and Waste Management.

[FR Doc. 91-21373 Filed 9-5-91; 8:45 am]

BILLING CODE 6450-01-M

Office of Fossil Energy

[FE Docket No. 91-50-NG]

Natural Gas Clearinghouse; Application for Blanket Authorization To Import and Export Natural Gas, Including Liquefied Natural Gas

AGENCY: Department of Energy, Office of Fossil Energy.

ACTION: Notice of application for blanket authorization to import and export natural gas, including liquefied natural gas.

SUMMARY: The Office of Fossil Energy (FE) of the Department of Energy (DOE) gives notice to receipt on July 22, 1991, of an application filed by Natural Gas Clearinghouse (NGC) for blanket authorization to import and export natural gas, including liquefied natural gas (LNG). Specifically, NGC requests blanket authorization to import up to 600 Bcf of natural gas, including LNG, and to export up to 130 Bcf of natural gas, including LNG, over a two-year term beginning on the date of first delivery of imported or exported natural gas of LNG. NGC intends to utilize existing pipeline and LNG facilities for the processing and transportation of the volumes to be imported or exported and to submit quarterly reports detailing each transaction.

NGC presently holds a blanket import/export authorization granted in DOE/FE Opinion and Order No. 347 (Order 347) issued October 31, 1989, as amended November 2, 1989 (FE Para. 70,266). Order 347 expires October 31, 1991. NGC reported importing 7,794,898 Mcf of natural gas from Canada for the first two quarters of 1991.

The application was filed under section 3 of the Natural Gas Act and DOE Delegation Order Nos. 0204-111 and 0204-127. Protests, motions to intervene, notices of intervention and written comments are invited.

DATES: Protests, motions to intervene or notices of intervention, as applicable, requests for additional procedures and written comments are to be filed at the address listed below no later than 4:30 p.m., Eastern time, October 7, 1991.

ADDRESSES: Office of Fuels Programs, Fossil Energy, U.S. Department of Energy, Forrestal Building, room 3F-056, FE-50, 1000 Independence Avenue, SW., Washington, DC 20585.

FOR FURTHER INFORMATION CONTACT:

Thomas Dukes, Office of Fuels Programs, Fossil Energy, U.S. Department of Energy, Forrestal Building, room 3F-094, 1000 Independence Avenue, SW., Washington, DC 20585, (202) 586-9590.

Lot Cook, Office of Assistant General Counsel for Fossil Energy, U.S. Department of Energy, Forrestal Building, room 6E-042, 1000 Independence Avenue, S.W., Washington, DC 20585, (202) 586-0503.

SUPPLEMENTARY INFORMATION: NGC, a Colorado partnership with its principal place of business in Houston, Texas, is a nationwide independent marketer of natural gas. Under the import authority sought, NGC contemplates purchasing competitively priced natural gas or LNG from a variety of foreign suppliers and reselling those supplies to various purchasers, including local distribution companies, pipelines, and commercial and industrial end-users. The export authority sought will allow NGC to make domestic supplies of natural gas for which there is no present national or regional U.S. need available to foreign consumers. NGC would import and export natural gas and LNG both for its own account as well as for the accounts of others.

In support of its application, NGC states that approval of its blanket import/export request will provide it the flexibility to compete in the fast paced spot market. The specific terms of each import and export arrangement would be made for contracts of up to two years. In most cases the price would be adjusted on a monthly or quarterly basis as required by market conditions, including the price of competing fuels and domestic natural gas. Sales would typically be on a best-efforts basis. Also, NGC maintains that no new facilities will be required under its proposal, therefore, eliminating potential environmental impacts.

The decision on the application for import authority will be made consistent with the DOE's gas import policy guidelines, under which the competitiveness of an import arrangement in the markets served is the primary consideration in determining whether it is in the public interest (49 FR 6684, February 22, 1984). In reviewing natural gas export applications, the domestic need for the gas to be exported is considered, and any other issues determined to be appropriate in a particular case. The applicant asserts that import and export arrangements transacted under the requested authority will be competitive, and that there is no current need for domestic gas that would be exported under the proposed short-term arrangements. Parties opposing the arrangement bear the burden of overcoming these assertions.

NEPA Compliance. The National Environmental Policy Act (NEPA), 42 U.S.C. 4321 *et seq.*, requires DOE to given appropriate consideration to the environmental effects of its proposed actions. No final decision will be issued in this proceeding until DOE has met its NEPA responsibilities.

Public Comment Procedures. In response to this notice, any person may file a protest, motion to intervene or notice of intervention, as applicable, and written comments. Any person wishing to become a party to the proceeding and to have their written comments considered as the basis for any decision on the application must, however, file a motion to intervene or notice of intervention, as applicable. The filing of a protest with respect to this application will not serve to make the protestant a

party to the proceeding, although protests and comments received from persons who are not parties will be considered in determining the appropriate action to be taken on the application. All protests, motions to intervene, notice of intervention, and written comments must meet the requirements that are specified by the regulations in 10 CFR part 590. Protests, motions to intervene, notice of intervention, request for additional procedures, and written comments should be filed with the Office of Fuels Programs at the address listed above.

It is intended that a decisional record on the application will be development through responses to this notice by parties, including the parties' written comments and replies thereto. Additional procedures will be used as necessary to achieve a complete understanding of the facts and issues. A party seeking intervention may request that additional procedures be provided, such as additional written comments, an oral presentation, a conference, or trial-type hearing. Any request to file additional written comments should explain why they are necessary. Any request for an oral presentation should identify the substantial question of fact, law, or policy at issue, show that it is material and relevant to a decision in the proceeding, and demonstrate why an oral presentation is needed. Any request for a conference should demonstrate why the conference would materially advance the proceeding. Any request for a trial-type hearing must show that there are factual issues genuinely in dispute that are relevant and material to a decision and that a trial-type hearing is necessary for a full and true disclosure of that facts.

If an additional procedure is scheduled, notice will be provided to all parties. If no party requests additional procedures, a final opinion and order may be issued based on the official record, including the application and responses filed by parties pursuant to this notice, in accordance with 10 CFR 590.316.

A copy of NGC's application is available for inspection and copying in the Office of Fuels Programs Docket Room, 3F–056 at the above address. The docket room is open between the hours of 8 a.m. and 4:30 p.m., Monday through Friday, except Federal holidays.

Issued in Washington, DC, on August 30, 1991.

Clifford P. Tomaszewski,

Acting Deputy Assistant Secretary for Fuels Programs, Office of Fossil Energy.

[FR Doc. 91–21374 Filed 9–5–91; 8:45 am]

BILLING CODE 6450-01-M

[FE Docket No. 91-60-NG]

TranAm Energy Inc.; Application for Blanket Authorization To Import and Export Natural Gas

AGENCY: Department of Energy, Office of Fossil Energy.

ACTION: Notice of application for blanket authorization to import and export natural gas.

SUMMARY: The Office of Fossil Energy (FE) of the Department of Energy (DOE) gives notice of receipt on August 6, 1991, of an application filed by TranAm Energy Inc. (TranAm) for blanket authority to import and export up to 100 Bcf of natural gas from and to Canada and Mexico, over a two-year term beginning on the date of first delivery of the import or the export.

TranAm intends to use existing pipeline facilities for transportation of the volumes to be imported and exported. No construction would be involved.

The application is filed under section 3 of the Natural Gas Act and DOE Delegation Order Nos. 0204–111 and 0204–127. Protests, motions to intervene, notices of intervention and written comments are invited.

DATES: Protests, motions to intervene or notices of intervention, as applicable, requests for additional procedures and written comments are to be filled at the address listed below no later than 4:30 p.m., eastern time, October 7, 1991.

ADDRESSES: Office of Fuels Programs, Fossil Energy, U.S. Department of Energy, Forrestal Building, room 3F–056, FE–50, 1000 Independence Avenue, SW., Washington, DC 20585.

FOR FURTHER INFORMATION CONTACT:

Larine A. Moore, Office of Fuels Programs, Fossil Energy, U.S. Department of Energy, Forrestal Building, room 3H–087, 1000 Independence Avenue, SW., Washington, DC 20585, (202) 586–9478.

Diane Stubbs, Office of Assistant General Counsel for Fossil Energy, U.S. Department of Energy, Forrestal Building, room 6E–042, GC–14, 1000 Independence Avenue, SW., Washington, DC 20585, (202) 586–6667.

SUPPLEMENTARY INFORMATION: TranAm Energy Inc. an Oklahoma corporation with its principal place of business in Tulsa, Oklahoma, is a natural gas marketing company active in arranging the sale and transportation of domestic gas in U.S. markets. Under the authorization sought, TranAm would import or export Canadian, Mexican and domestically produced natural gas on a short-term or spot market basis for its own account or as agent on behalf of other suppliers and purchasers, including pipelines, local distribution companies, and commercial and industrial end-users. TranAm contemplates the following types of import and export transactions: (1) Importation of supplies of Canadian and Mexican natural gas for consumption in U.S. markets; (2) importation of Canadian natural gas for eventual return (via export) to Canadian markets; (3) exportation of domestically produced natural gas for consumption in Canadian and Mexican markets; and (4) exportation of domestically produced gas for eventual return (via import) to U.S. markets. The specific terms of each import and export sale, including price and volumes would be negotiated on an individual basis.

The decision on the application for import authority will be made consistent with the DOE's gas import policy guidelines, under which the competitiveness of an import arrangement in the markets served is the primary consideration in determining whether it is in the public interest (49 FR 6684, February 22, 1984). In reviewing natural gas export applications, domestic need for the gas to be exported is considered, and any other issues determined to be appropriate in a particular case, including whether the arrangement is consistent with the DOE policy of promoting competition in the natural gas marketplace by allowing commercial parties to freely negotiate their own trade arrangements. Parties, especially those that may oppose this application, should comment on the issue of competitiveness as set forth in the policy guidelines regarding the requested import and export authority. The applicant asserts that this import/export arrangement will be competitive and there is no current need for the domestic bear the burden of overcoming this assertion.

NEPA Compliance. The National Environmental Policy Act (NEPA), 42 U.S.C. 4321, *et seq.* requires DOE to give appropriate consideration to the environmental effects of its proposed actions. No final decision will be issued in this proceeding until DOE has met its NEPA responsibilities.

Public Comment Procedures. In response to this notice, any person may file a protest, motion to intervene or notice of intervention, as applicable, and written comments. Any person wishing to become a party to the proceeding and to have the written comments considered as the basis for any decision on the application must, however, file a

motion to intervene or notice of intervention, as applicable. The filing of a protest with respect to this application will not serve to make the protestant a party to the proceeding, although protests and comments received from persons who are not parties will be considered in determining the appropriate action to be taken on the application. All protests, motions to intervene, notices of intervention, and written comments must meet the requirements that are specified by the regulations in 10 CFR part 590. Protests, motions to intervene, notices of intervention, requests for additional procedures, and written comments should be filed with the Office of Fuels Programs at the above address.

It is intended that a decisional record will be developed on the application through responses to this notice by parties, including the parties' written comments and replies thereto. Additional procedures will be used as necessary to achieve a complete understanding of the facts and issues. A party seeking intervention may request that additional procedures be provided, such as additional written comments, an oral presentation, a conference, or trial-type hearing. Any request to file additional written comments should explain why they are necessary. Any request for an oral presentation should identify the substantial question of fact, law or policy at issue, show that it is material and relevant to a decision in the proceeding, and demonstrate why an oral presentation is needed. Any request for a conference should demonstrate why the conference would materially advance the proceeding. Any request for a trial-type hearing must show that there are factual issues genuinely in dispute that are relevant and material to a decision and that a trial-type hearing is necessary for a full and true disclosure of the facts.

If an additional procedure is scheduled, a notice will be provided to all parties. If no party requests additional procedures, a final opinion and order may be issued based on the official record, including the application and responses filed by parties pursuant to this notice, in accordance with 10 CFR 590.316.

A copy of TranAm's application is available for inspection and copying in the Office of Fuels Programs Docket Room, 3F-056, at the above address. The docket room is open between the hours of 8 a.m. and 4:30 p.m., Monday through Friday, except Federal holidays.

Issued in Washington, DC, August 30, 1991.

Clifford P. Tomaszewski,

Acting Deputy Assistant Secretary for Fuels Programs, Office of Fossil Energy.

[FR Doc. 91-21375 Filed 9-5-91; 8:45 am]

BILLING CODE 6450-01-M

[FE Docket No. 91-48-NG]

Westar Marketing Co.; Application for Blanket Authorization To Import Natural Gas from Canada

AGENCY: Department of Energy, Office of Fossil Energy.

ACTION: Notice of application for blanket authorization to import natural gas.

SUMMARY: The Office of Fossil Energy (FE) of the Department of Energy (DOE) gives notice of receipt of an application filed on July 17, 1991, by Westar Marketing Company (Westar) requesting blanket authorization to import up to 50 Bcf of Canadian natural gas for a term of two years beginning October 1, 1991. Westar intends to use existing facilities to import the gas and to file quarterly reports with FE giving the details of each transaction.

The application is filed under section 3 of the Natural Gas Act and DOE Delegation Order Nos. 0204-111 and 0204-127. Protests, motions to intervene, notices of intervention, and written comments are invited.

DATES: Protests, motions to intervene or notices of intervention, as applicable, requests for additional procedures and written comments are to be filed at the address listed below no later than 4:30 p.m., eastern time, October 7, 1991.

ADDRESSES: Office of Fuels Programs, Fossile Energy, U.S. Department of Energy, Forrestal Building, room 3F-056, FE-50, 1000 Independence Avenue, SW., Washington, DC 20585.

FOR FURTHER INFORMATION:

Larine A. Moore, Office of Fuels Programs, Fossil Energy, U.S. Department of Energy, Forrestal Building, room 3F-056, FE-53, 1000 Independence Avenue, SW., Washington, DC 20585, (202) 586-9478.

Diane Stubbs, Office of Assistant General Counsel for Fossil Energy, U.S. Department of Energy, Forrestal Building, room 6E-042, GC-14, 1000 Independence Avenue SW., Washington, DC 20585, (202) 586-6667.

SUPPLEMENTARY INFORMATION: Westar is a general partnership with its principal place of business in Salt Lake City, Utah. Westar currently holds a two-year authorization to import up to 10 Bcf of Canadian natural gas from February 1, 1990 through January 31, 1992 (1 FE Para. 70,292). As of July 30, 1991, Westar has imported up to 7.8 Bcf of natural gas under its existing authorization. Should Westar's application be approved it would replace its existing import authority.

Westar proposes to continue importing natural gas purchased from various Canadian suppliers, for resale primarily to industrial and commercial end users in the Pacific Northwest on a short-term spot market basis. The specific terms of each transaction, including the price, would be responsive to competitive market conditions. According to Westar, the proposed increase in volumes over the presently authorized import amount would enable it to expand its marketing efforts.

The decision on the application for import authority will be made consistent with DOE's gas import policy guidelines, under which the competitiveness of an import arrangement in the markets served is the primary consideration in determining whether it is in the public interest (49 FR 6684, February 22, 1984). Parties that may oppose this application should comment in their responses on the issue of competitiveness as set forth in the policy guidelines. The applicant asserts that the proposed imports will be competitive. Parties opposing the arrangement bear the burden of overcoming this assertion.

NEPA Compliance. The National Environmental Policy Act (NEPA), 42 U.S.C. 4321 *et seq.*, requires DOE to give appropriate consideration to the environmental effects of its proposed actions. No final decision will be issued in this proceeding until DOE has met its NEPA responsibilities.

Public Comment Procedures. In response to this notice, any person may file a protest, motion to intervene or notice of intervention, as applicable, and written comments. Any person wishing to become a party to the proceeding and to have the written comments considered as the basis for any decision on the application must, however, file a motion to intervene or notice of intervention, as applicable. The filing of a protest with respect to this application will not serve to make the protestant a party to the proceeding, although protests and comments received from persons who are not parties will be considered in determining the appropriate action to be taken on the application. All protests, motions to intervene, notices of intervention, and written comments must meet the requirements that are specified by the regulations in 10 CFR part 590. Protests, motions to intervene, notices of intervention, requests for additional

procedures, and written comments should be filed with the Office of Fuels Programs at the above address.

It is intended that a decisional record will be developed on the application through responses to this notice by parties, including the parties' written comments and replies thereto. Additional procedures will be used as necessary to achieve a complete understanding of the facts and issues. A party seeking intervention may request that additional procedures be provided, such as additional written comments, an oral presentation, a conference, or trial-type hearing. Any request to file additional written comments should explain why they are necessary. Any request for an oral presentation should identify the substantial question of fact, law, or policy at issue, show that it is material and relevant to a decision in the proceeding, and demonstrate why an oral presentation is needed. Any request for a conference should demonstrate why the conference would materially advance the proceeding. Any request for a trial-type hearing must show that there are factual issues genuinely in dispute that are relevant and material to a decision and that a trial-type hearing is necessary for a full and true disclosure of the facts.

If an additional procedure is scheduled, notice will be provided to all parties. If no party requests additional procedures, a final opinion and order may be issued based on the official record, including the application and responses filed by parties pursuant to this notice, in accordance with 10 CFR 590.316.

A copy of Westar's application is available for inspection and copying in the Office of Fuels Programs Docket Room, 3F-056 at the above address. The docket room is open between the hours of 8 a.m. and 4:30 p.m., Monday through Friday, except Federal holidays.

Issued in Washington, DC, August 30, 1991.

Clifford P. Tomaszewski,

Acting Deputy Assistant Secretary for Fuels Programs, Office of Fossil Energy.

[FR Doc. 91-21376 Filed 9-5-91; 8:45 am]

BILLING CODE 6450-01-M

ENVIRONMENTAL PROTECTION AGENCY

[ER-FRL-3993-2]

Environmental Impact Statements and Regulations; Availability of EPA Comments

Availability of EPA comments prepared August 19, 1991 through August 23, 1991 pursuant to the Environmental Review Process (ERP), under section 309 of the Clean Air Act and section 102(2)(c) of the National Environmental Policy Act as amended. Requests for copies of EPA comments can be directed to the Office of Federal Activities at (202) 382-5076.

An explanation of ratings assigned to draft environmental impact statements (EISs) was published in FR dated April 5, 1991 (56 FR 14096).

Draft EISs

ERP No. D-AFS-L65147-AK Rating EC2, Bohemia Mountain Timber Sales, Implementation and COE Permit, and Duncan Salt Chuck Creek Designation and Nondesignation into the Wild and Scenic River System, Tongass National Forest, Stikine Area, AK.

Summary: EPA's primary concerns are with the action alternatives potential impact on water quality and fisheries. Additional information is needed on monitoring and mitigation.

ERP No. D-AFS-L65151-ID Rating EC2, Deep Creek and Copper Creek Timber Harvest and Road Construction, Implementation, Council Ranger District, Payette National Forest, Adams County, ID.

Summary: EPA expressed environmental concerns based on the potential for adverse water quality effects and air quality effects on the Hells Canyon Wilderness area Class I airshed. Additional information is needed to describe the effectiveness of proposed mitigation, site specific monitoring and the effects of slash burning.

ERP No. D-COE-K36101-NV Rating EO2, Las Vegas Wash and Tributaries (Tropicana and Flamingo Washes) Flood Damage Reduction Plan, Implementation and Funding, Las Vegas Valley, Clark County, NV.

Summary: EPA has environmental objection to the proposed project. The DEIS does not demonstrate compliance with section 404 of the Clean Water Act, which regulates the discharge of dredged or fill material into waters of the United States. EPA questioned the EIS's assertion that the project accommodates rather than induces additional growth in Clark County and the assertion that project impacts are insignificant and that no mitigation is necessary. EPA objects to possible degradation to waters of the U.S., impacts to threatened and endangered species, indirect and cumulative impacts and impacts to air quality.

ERP No. D-FAA-G51025-TX Rating EC2, Houston West Side Airport Improvement, Funding, Airport Layout Plan, Waller County, TX.

Summary: EPA has environmental concerns with the potential impacts associated with several of the alternatives on wetlands and migratory waterfowl. EPA believes that the choice of alternatives should consider the potential and cost for complete mitigation of the impacts. The DEIS did not include mitigation measures.

ERP No. D-SFW-K60021-CA Rating L01, Stone Lakes National Wildlife Refuge Management Plan, Land Acquisition and Easement, Possible COE section 10 and 404 Permits, Central Valley, Sacramento County, CA.

Summary: EPA expressed a lack of objection to the proposed action and fully supports the establishment of the Stone Lakes National Wildlife Refuge. EPA believes there is an urgent need for protection, enhancement and restoration of wetlands and river habitat in the California's Central Valley and San Francisco Bay/Delta and views the proposed wildlife refuge as an important contribution.

Final EISs

ERP No. F-AFS-K61108-CA Kings River Special Management Area (SMA), South Fork, Middle Fork, Kings Wild and Scenic Rivers Development and Management, Implementation Plan, Sierra and Sequoia National Forests, King Rivers Ranger and Hume Lake Ranger Districts, Fresno County, CA.

Summary: EPA's prior concerns were mostly addressed in the FEIS. It is still felt that issues regarding proposed bridge and section 404 permitting are not fully explained.

ERP No. F-NOA-G90008-TX, Flower Garden Banks National Marine Sanctuary Establishment, Designation, LA and TX.

Summary: EPA has no objection to the selected management plan for the Flower Garden Banks National Marine Sanctuary.

ERP No. F-UAF-K11046-CA, March Air Force Base Realignment, Implementation, 445th Air Force Reserve Military Airlift Wing, Riverside County, CA.

Summary: Review of the Final EIS has been competed and the project found to be satisfactory. No formal letter was sent to the agency.

ERP No. FA-COE-E34013-00, Richard B. Russel Dam and Lake Pumped Storage Installation and Operations, Updated Information on Fish Protection Alternative, Savannah District, Elbert and Hart Counties, GA; Anderson and Abbeville Counties, SC.

Summary: EPA concurs with the proposed incremental approach, but elects to defer the final evaluation on

the environmental significance to the lakes' fishery resource until the test results of the reduced power generation are available for inspection.

Regulations

ERP No. R-OSM-A01097-00, 30 CFR Parts 701, 780, 784, 816, and 817; Surface Coal Mining and Reclamation Operations; Permanent Regulatory Program; Performance Standards; Permanent and Temporary Impoundments (56 FR 29774)

Summary: EPA believes that the revisions in proposed regulations are adequate.

Dated: September 2, 1991.

William D. Dickerson,

Deputy Director, Office of Federal Activities.

[FR Doc. 91-21402 Filed 9-5-91; 8:45 am]

BILLING CODE 6560-50-M

[ER-FRL-3993-1]

Environmental Impact Statements; Notice of Availability

Responnsible Agency

Office of Federal Activities, General Information (202) 382-5073 or (202) 382-5075. Availability of Environmental Impact Statements Filed August 26, 1991 Through August 30, 1991 Pursuant to 40 CFR 1506.9.

EIS No. 910298, FINAL EIS, AFS, MT, Price Wise Timber Sale, Implementation, Beaverhead National Forest, Wise River Ranger District, Beaverhead County, MT, Due: October 07, 1991, Contact: Peri Suenram (406) 683-3932.

EIS No. 910299, FINAL EIS, NPS, VA, U.S. 340 Improvement, Criser Road to South Corporate Limits. Approval and COE Nationwide Headwaters Permit, Shenandoah National Forest, Warren County, VA, Due: October 07, 1991, Contact: Alexander L. Rivers (703) 999-3300.

EIS No. 910300, DRAFT EIS, FHW, VA, Blacksburg/Roanoke Connector Improvements, US-460 Bypass South of the Town of Blacksburg to I-81 North to Roanoke, Funding, Montgomery County, VA, Due: October 21, 1991, Contact: James M. Tumlin (804) 771-2371.

EIS No. 910301, DRAFT SUPPLEMENT, AFS, SD, Black Hills National Forest, Land and Resource Management Plan, Norbeck Wildlife Preserve, Additional Information, Custer and Pennington Counties, SD, Due: November 01, 1991, Contact: Mary Sue Waxier (605) 673-2251.

EIS No. 910302, FINAL EIS, FHW, VT, NY, US 7 in Bennington, VT Improvements, US 7 to US 7/VT-67A Interchange; VT-9 in Bennington, VT and NY-7 Hoosick, NY Improvements, VT-9 or NY-7 to US 7/VT-67A Interchange or VT-9 east of Bennington Village, Funding, Bennington County, VT and Rensselaer County, NY, Due: October 07, 1991, Contact: George Jensen (802) 828-4423.

EIS No. 910303, DRAFT EIS, FHW, WA, I-90 Seattle Added Access Ramp, Construction to and from I-90 between I-5 and the west shore of Lake Washington, Funding City of Seattle, King County, WA, Due: October 21, 1991, Contact: Barry F. Morehead (206) 753-2120.

EIS No. 910304, DRAFT EIS, BOP, DC, Washington, DC Metropolitan Detention Center (MDC), Construction/Operation, Washington, DC, Due: October 21, 1991, Contact: Patricia K. Sledge (202) 514-6470.

EIS No. 910305, DRAFT SUPPLEMENT, UAF, WY, NB, Peacekeeper Missiles in Minuteman Silos Program, Deployment, Additional Information, Near Warren AFB, Laramie, Goshen and Platte Counties, Wyoming and Scotts Bluff, Banner and Kimball Counties, Nebraska, Due: October 22, 1991, Contact: Jay McCain (714) 382-2003.

EIS No. 910306, DRAFT SUPPLEMENT, AFS, AK, Tongass Land Management Plan Revision, New Information, Tongass National Forest, AK, Due: December 06, 1991, Contact: Steven A. Brink (907) 586-8700.

EIS No. 910307, DRAFT SUPPLEMENTAL, COE, CA, New San Clemente Project, Dam and Reservoir Construction, Monterey Peninsula Water Supply Management, Updated Information and Additional Alternatives, 404 Permit, Carmel River, Monterey County, CA, Due: October 23, 1991, Contact: Roger Golden (415) 744-3344.

EIS No. 910308, FINAL EIS, UMT, OR, Westside Corridor Mass Transit and Highway Improvement, Updated Alternatives, Funding and Section 404 Permit City of Portland, Beaverton, Hillsboro, Multnomah and Washington Counties, OR, Due: October 07, 1991, Contact: Terry Ebersole (206) 442-4210.

EIS No. 910309, DRAFT EIS, CDB, NY, Northeast Middle School Project, Construction and Operation, Site Approval and CDB Grant, City of Rochester, Monroe County, NY, Due: October 21, 1991, Contact: Robert M. Barrows (716) 428-6924.

EIS No. 910310, REVISED DRAFT EIS, NPS, MN Voyageurs National Park Wilderness Recommendation, Designation Updated Information, St. Louis and Koochiching Counties, MN, Due: November 05, 1991, Contact: Eric Stone (503) 392-7087.

EIS No. 910311, FINAL EIS, HUD, NY, East Falls Street Redevelopment Project, Manufacturers MegaMall Construction, UDAG, Urban Renewal Plan Amendment, Niagara County, NY, Due: October 07, 1991, Contact: David Brooks (716) 286-4466.

Dated: September 03, 1991.

William D. Dickerson,

Deputy Director, Office of Federal Activities.

[FR Doc. 91-21403 Filed 9-5-91; 8:45 am]

BILLING CODE 6560-50-M

FEDERAL RESERVE SYSTEM

Report to Congressional Committees Regarding Differences in Capital and Accounting Standards Among the Federal Banking and Thrift Agencies

AGENCY: Board of Governors of the Federal Reserve System.

ACTION: Report to the Committee on Banking, Housing, and Urban Affairs of the United States Senate and to the Committee on Banking, Finance and Urban Affairs of the United States House of Representatives regarding differences in capital and accounting standards among the Federal banking and thrift agencies.

SUMMARY: This report has been prepared by the Federal Reserve Board pursuant to section 1215 of the Financial Institutions Reform, Recovery, and Enforcement Act of 1989. Section 1215 requires each Federal banking and thrift agency to report annually to the Chairman and ranking minority member of the Committee on Banking, Housing and Urban Affairs of the Senate; and the Chairman and ranking minority member of the Committee on Banking, Finance and Urban Affairs of the House of Representatives regarding any differences between the capital standards used by such agency and capital standards used by other banking and thrift agencies. The report must also contain an explanation of the reasons for any discrepancy in such capital standards. Finally, the report must be published in the **Federal Register**.

FOR FURTHER INFORMATION CONTACT: Rhoger H. Pugh, Manager (202/728-5883), Charles Holm, Supervisory Financial Analyst (202/452-3502), or Robert E. Motyka, Senior Financial Analyst (202/452-3621), Division of Banking Supervision and Regulation, Board of Governors. For the hearing impaired only, Telecommunication Device for the Deaf (TDD), Earnestine

Hill or Dorothea Thompson (202/452–3544).

Report to the Committee on Banking, Housing, and Urban Affairs of the United States Senate and to the Committee on Banking, Finance and Urban Affairs of the United States House of Representatives Regarding Differences in Capital and Accounting Standards Among the Federal Banking and Thrift Agencies.

Capital Standards

As stated in last year's report to Congress, the three federal bank regulatory agencies [1] have, for a number of years, employed a common regulatory framework that establishes minimum capital adequacy ratios for commercial banking organizations. In the past, the framework employed required that banking organizations maintain a level of primary capital (principally, permanent shareholders' equity, general loan loss reserves, and certain mandatory convertible securities) equal to at least 5.5 percent of total assets. Banking organizations also were required to maintain a level of total capital (primary capital plus secondary capital, such as subordinated debt) equal to at least 6.0 percent of total assets.

The primary and total capital to total assets ratios have been replaced by the risk-based capital framework adopted by the federal banking agencies based upon the international capital accord developed by the Basle Committee on Banking Regulations and Supervisory Practices (Basle Accord) and endorsed by the central bank governors of the G–10 countries. This framework establishes minimum ratios of total and Tier 1 (core) capital to risk-weighted assets. The Accord requires that banking organizations have total capital equal to at least 7.25 percent of risk-weighted assets during the phase-in period which began at the end of 1990. This requirement is to be fully phased-in by the end of 1992, when banking organizations will be required to maintain total capital equal to at least 8 percent of risk-weighted assets. One half of the total capital requirement, or a minimum of 4 percent by the end of 1992, must consist of Tier 1 capital (principally, common shareholders' equity and qualifying perpetual preferred stock). The other half, Tier 2, may include certain supplementary capital items, such as general loan loss reserves and subordinated debt.

The risk-based capital requirements are viewed by the banking agencies as minimum standards. In addition to identical ratios, the risk-based framework being implemented by the banking agencies includes a common definition of regulatory capital and a uniform system of risk weights and categories. While the minimum standards and risk weighting framework used by the banking agencies are the same, there are some technical differences in language and interpretation among the agencies that are discussed in Section One. In addition, Section One also discusses the banking agencies' guidelines relating to the treatment of identifiable intangible assets. which are not entirely uniform at the present time. All three agencies have this issue under review. An important objective of this review is to reach mutual agreement on a uniform standard.

During 1990, the banking agencies implemented new minimum capital to total assets, or leverage, ratios that employ a definition of Tier 1 capital that is consistent with the risk-based capital definition. The Federal Reserve adopted a leverage ratio that starts with a minimum 3 percent Tier 1 base and, for all but the most highly-rated institutions that are free of any supervisory weaknesses, requires institutions to maintain an additional cushion of at least 100 to 200 basis point depending upon the institution's financial condition and risk profile. The OCC and FDIC also have adopted similar minimum leverage standards. All three agencies view the minimum Tier 1 leverage ratio as a supplement to their minimum risk-based capital requirements.

The OTS is in the process of finalizing a new leverage ratio rule that will conform to the rules of the banking agencies. OTS has also adopted risk-based capital standards for thrift institutions which, while generally parallel to those of the banking agencies, are different in some aspects.

The differences in the capital standards between the banking agencies and the OTS are set forth in Section One. The staffs of the banking agencies and the OTS have been meeting regularly to identify and address differences and inconsistencies in their capital standards. The agencies are committed to continuing this process in an effort to achieve full uniformity in their capital standards.

Accounting Standards

Over the years, the commercial banking agencies, under the auspices of the Federal Financial Institutions Examination Council, have developed uniform Reports of Condition and Income (Call Reports) for all commercial banks and FDIC-supervised savings banks. The reporting standards followed by the banking agencies are substantially consistent, aside from a few limited exceptions, with generally accepted accounting principles (GAAP) as they are applied by commercial banks.[2] The uniform bank Call Report serves as the basis for calculating risk-based capital and leverage ratios, as well as for other regulatory purposes. Thus, material differences in regulatory accounting and reporting standards among commercial banks and FDIC-supervised savings banks do not exist.

The OTS requires each thrift institution to file the Thrift Financial Report (TFR), which is consistent with GAAP as it is applied by thrifts. The TFR differs in some respects from the bank Call Report. One reason for this is that thrift GAAP is different in a few limited areas from GAAP as it is applied by banks. Another explanation lies in the few isolated areas in which the bank Call Report departs from bank GAAP. A summary of the differences between the bank Call Report and the TFR is presented in Section Two.

Simplification and Reduction of Differences in Accounting and Reporting Standards

Commercial banks and FDIC-supervised savings banks are generally subject to uniform accounting and reporting standards. The federal banking agencies and OTS continue to undertake projects and study ways to simplify and reduce differences in reporting standards between commercial banks and savings banks and loan associations. In this regard, OTS intends to adopt some of the policies of the banking agencies where differences currently exist.

Furthermore, the federal banking agencies and OTS have recently issued uniform guidance that is consistent with GAAP for the reporting of nonaccrual and restructured assets and proposed uniform guidance governing assets held for trading or for sale and high risk mortgage derivative products. Moreover,

[1] At the federal level, the Federal Reserve System has primary supervisory responsibility for state-chartered banks that are members of the Federal Reserve System as well as all bank holding companies. The Federal Deposit Insurance Corporation (FDIC) has primary responsibility for state nonmember banks and FDIC-supervised savings banks. National banks are supervised by the Office of the Comptroller of the Currency (OCC). The Office of Thrift Supervision (OTS) has primary responsibility for savings and loan associations.

[2] In those cases where bank Call Report standards are different from GAAP, the regulatory reporting requirements are more conservative.

the federal banking agencies and OTS requested public comment last year on recourse arrangements, and this request for comment could be the basis for a proposed rule that would potentially conform the reporting practices of the banking agencies and OTS in this area. Staffs of the banking agencies and OTS are meeting regularly to review their approaches in evaluating the allowance for loan and lease losses and the valuation of real estate collateral and to promote consistency of the agencies' practices in these areas.

One way to move towards greater consistency in accounting and reporting standards between the banking agencies and OTS would be to explore the possibility of extending to a broader range of depository institutions the type of uniform reporting framework currently applicable to all commercial banks and FDIC-supervised thrift institutions. Another way would be to encourage greater consistency between bank GAAP and thrift GAAP. In this regard, the Financial Accounting Standards Board (FASB) and the American Institute of Certified Public Accountants (AICPA) have been asked by the FDIC to consider eliminating the differences in GAAP as applied by thrifts and by banks. Both the FASB and AICPA are moving forward on projects that would potentially increase consistency between bank and thrift GAAP. Finally, the bank regulatory agencies are continuing to study ways in which the limited differences between bank Call Report standards and GAAP can be eliminated or reduced, consistent with the agencies' supervisory responsibilities.

Section One—Summary of Differences in Capital Standards Among Federal Banking and Thrift Supervisory Agencies

Leverage Capital Ratios

Throughout most of the 1980s, the banking agencies required banking organizations to meet minimum capital to total assets (leverage) ratios. In the past, these requirements included a minimum 5.5 percent primary capital ratio and a minimum 6.0 percent total capital ratio.

In 1990, the banking agencies developed revised leverage standards based upon the common definition of Tier 1 capital contained in the banking agencies' risk-based capital guidelines. The Federal Reserve adopted a new leverage ratio in September, 1990 that replaces the primary and total capital ratios. This new standard requires all but the strongest and most highly-rated institutions to meet a minimum Tier 1 capital ratio of 3 percent, plus an additional cushion of at least 100 to 200 basis points, depending upon an organization's financial condition.

The Office of the Comptroller of the Currency (OCC) and the Federal Deposit Insurance Corporation (FDIC) have developed substantially similar leverage ratios which require for all but the most highly-rated banks a minimum Tier 1 capital ratio of 3 percent plus an additional cushion of at least 100 to 200 basis points. All of the banking agencies view these new leverage standards as minimum requirements that supplement the risk-based capital standard.

The banking agencies have generally viewed regulatory capital ratios as minimum standards; most banking organizations have been expected to operate well above the minimum ratios. As a general rule, the banking agencies have excluded goodwill from the definition of bank regulatory capital. (The treatment of other intangible assets is discussed below.)

As required by FIRREA, the Office of Thrift Supervision (OTS) established a 3 percent core capital ratio and a 1.5 percent tangible capital leverage requirement for thrift institutions. However, the OTS is in the process of finalizing a new leverage rule that will conform to the rules of the banking agencies. The components of core capital for thrifts generally parallel those for Tier 1 bank capital, with the exception of certain adjustments discussed below and the inclusion of qualifying supervisory goodwill. Such goodwill is to be phased out of thrift core capital by the end of 1994, after which time the treatment of goodwill for thrift institutions will be consistent with that of the banking agencies.

Risk-based Capital Ratios

The three federal banking agencies have adopted risk-based capital standards consistent with the Basle Accord. These standards establish for all commercial banking organizations a minimum ratio of total capital (Tier 1 plus Tier 2) to risk-weighted assets of 7.25 percent for year-end 1990; this minimum standard increases to 8 percent as of year-end 1992. Core or Tier 1 capital comprises common stockholders' equity, qualifying perpetual preferred stock, and minority interests in consolidated subsidiaries, less goodwill. Tier 1 capital must make up at least 50 percent of the total risk-based capital requirement. Tier 2 capital includes such components as general loan loss reserves, subordinated term debt, and certain other perpetual or convertible debt capital instruments, subject to appropriate limitations and conditions. Risk-weighted assets are calculated by assigning risk weights of 0, 20, 50 and 100 percent to broad categories of assets and off-balance sheet items based upon their relative credit risk.

The banking agencies view the risk-based standard as a minimum supervisory benchmark. In part, this is because the risk-based standard focuses primarily on credit risk; it does not take full or explicit account of certan other banking risks, such as exposure to changes in interest rates. The full range of risks to which banks are exposed are reviewed and evaluated carefully during on-site examinations. In view of these risks, most banking organizations are expected to operate above the minimum risk-based and leverage capital requirements.

The Federal Reserve is working with the other U.S. banking agencies and the regulatory authorities on the Basle Supervisors' Committee to develop possible methods to measure and address certain market and price risks. These risks include exposures resulting from foreign exchange positions, changes in interest rates, and holdings of equity securities. If appropriate and practicable, these methods could be used to supplement and expand the basic risk-based capital framework. One important reason for addressing these risks on an international level is to develop supervisory approaches that do not undermine the competitiveness of U.S. banking organizations. As already noted, banking organizations subject to these additional risks are expected to maintain capital positions well above the minimum levels.

OTS has adopted a risk-based capital standard that in many respects is similar to the framework adopted by the banking agencies. The OTS standard currently requires a minimum risk-based capital ratio equal to 7.2 percent of risk-adjusted assets. This ratio will increase to 8 percent by year-end 1992. OTS has proposed an additional element for interest rate risk.

Equity Investments

To the extent that commercial banks are allowed to invest in equity securities under applicable federal or state law, such investments are generally assigned to the 100 percent risk category, for risk-based capital purposes, by all three of the federal banking agencies. The Federal Reserve's guidelines also permit deduction of equity investments from the parent bank's capital or other options to assess an appropriate capital charge above the minimum requirement. In general, state member banks

supervised by the Federal Reserve are not permitted to invest in equity securities, nor are state member banks generally permitted to engage in real estate investment or development activities. (The Federal Reserve's treatment of investments in subsidiaries is discussed below.)

The OTS risk-based capital standards require that thrift institutions deduct equity investments from capital over a phase-in period, which ends on July 1, 1994.

FSLIC/FDIC—Covered Assets (Assets Subject to Guarantee Arrangements by the FSLIC or FDIC)

The federal banking agencies generally place these assets in the 20 percent risk category, the same category to which claims on depository institutions and government-sponsored agencies are assigned.

The OTS places these assets in the zero percent risk category.

Repossessed Assets and Assets More Than 90 Days Past Due

The federal banking agencies require that foreclosed real estate be written down to fair value (see Section 2 of this appendix, "Specific Valuation Allowances for, and Charge-Offs of, Troubled Real Estate Loans not in Foreclosure" and "Valuation of Foreclosed Real Estate" for further details) and the resulting asset assigned to the 100 percent risk category. The write-down effectively results in a reduction of capital. Assets 90 days or more past due, including 1- to 4-family mortgages, are assigned to the 100 percent risk weight category. When such assets are eventually charged-off, capital is effectively adjusted for any resulting loss.

Consistent with the Basle Accord, the 100 percent risk weight is the highest risk category under the risk-based capital guidelines of the banking agencies. As noted above, however, the bank risk-based capital standards represent minimum ratios. Consequently, organizations with high levels of risk, including a significant volume of nonperforming or past due assets, are expected to maintain capital ratios above minimum levels. In this way, the risk-based capital framework of the banking agencies provides the latitude to place a higher than minimum capital charge on assets of this type.

The OTS risk-based capital framework has a 200 percent risk category to which repossessed assets and assets more than 90 days past due are assigned (generally referred to as REO). An exception exists for 1- to 4-family mortgages more than 90 days past due, which are assigned to the 100 percent risk weight category. The OTS is intending to change the risk weight for all REO to 100 percent in conjunction with proposed changes in the accounting for REO.

Limitation on Subordinated Debt and Limited-Life Preferred Stock

Consistent with the Basle Accord, the federal bank regulatory agencies limit the amount of subordinated debt and limited-life preferred stock that may be included in Tier 2 capital. This limit, in effect, states that these components together may not exceed 50 percent of Tier 1 capital. In addition, maturing capital instruments must be discounted by 20 percent in each of the last five years prior to maturity.

Neither of these capital components is a permanent source of funds, and subordinated debt cannot absorb losses while the bank continues to operate as a going concern. On the other hand, both components can provide a cushion of protection to the FDIC insurance fund. Thus, this limitation permits the inclusion of some subordinated debt in capital, while assuring that permanent stockholder's equity capital remains the predominant element in bank regulatory capital.

The OTS has no limitation on the total amount of limited-life or maturing instruments that may be included within Tier 2 capital. However, OTS allows thrifts the option of: (1) Discounting maturing capital instruments, issued on or after November 7, 1989, by 20 percent a year over the last 5 years of their term—the approach required by the banking agencies; or (2) including the full amount of such instruments provided that the amount maturing in any of the next seven years does not exceed 20 percent of the thrift's total capital.

Subsidiaries

Consistent with the Basle Accord and long-standing supervisory practices, the federal bank regulatory agencies generally consolidate all significant majority-owned subsidiaries of the parent organization for capital purposes. The reason for this is to assure that capital requirements are related to all of the risks to which the banking organization is exposed.

In the case of unconsolidated financial and banking subsidiaries, the Federal Reserve, consistent with the Basle Accord, generally deducts investments in such subsidiaries in determining the adequacy of the parent bank's capital.

The Federal Reserve's risk-based capital guidelines provide a degree of flexibility in the treatment for capital purposes of other unconsolidated subsidiaries or investments in joint ventures and associated companies. For example, the Federal Reserve may deduct investments in such subsidiaries from an organization's capital, apply an appropriate risk-weighted capital charge against the proportionate share of the assets of the entity, require a line-by-line consolidation of the entity, or otherwise require that the parent organization maintain a level of capital above the minimum standard that is sufficient to compensate for any risks associated with the investment.

The guidelines also permit the deduction of investments in subsidiaries that, while consolidated for accounting purposes, are not consolidated for certain specified supervisory or regulatory purposes. For example, the Federal Reserve deducts investments in, and unsecured advances to, section 20 securities subsidiaries from the parent bank holding company's capital. The FDIC accords similar treatment to securities subsidiaries of state nonmember banks established pursuant to § 337.4 of the FDIC regulations. Similarly, in accordance with § 325.5(f) of the FDIC regulations, investments in, and extensions of credit to, certain mortgage banking subsidiaries are also deducted in computing the parent bank's capital. The deduction of investments in subsidiaries from the parent's capital is designed to ensure that the capital supporting the subsidiary is not also used as the basis of further leveraging and risk-taking by the parent banking organization. In deducting investments in, and advances to, certain subsidiaries from the parent's capital, the Federal Reserve expects the parent banking organization to meet or exceed minimum regulatory capital standards without reliance on the capital invested in the particular subsidiary. In assessing the overall capital adequacy of banking organizations, the Federal Reserve may also consider the organization's fully consolidated capital position.

Under OTS capital guidelines, a distinction, mandated by FIRREA, is drawn between subsidiaries that are engaged in activities that are permissible for national banks and subsidiaries that are engaged in "impermissible" activities for national banks. Subsidiaries of thrift institutions that engage only in permissible activities are consolidated on a line-for-line basis if majority-owned and on a pro rata basis if ownership is between 5 percent and 50 percent. As a general rule, investments, including loans, in subsidiaries that engage in

impermissible activities are deducted in determining the capital adequacy of the parent. However, investments, including loans, outstanding as of April 12, 1989 to subsidiaries that were engaged in impermissible activities prior to that date are grandfathered and will be phased-out of capital over a transition period that expires on July 1, 1994. During this transition period, investments in subsidiaries engaged in impermissible activities that have not been phased out of capital are to be consolidated on a pro rata basis.

Qualifying Multifamily Mortgage Loans

The banking agencies place multifamily mortgage loans (five units or more) in the 100 percent risk weight category. The reason for this is that the risk associated with such assets is more akin to commercial risk, which is assigned to the 100 percent risk category, than it is to the risk associated with 1- to 4-family residential mortgages. The OTS allows certain multifamily mortgage loans to qualify for the 50 percent risk-weight category. This would apply, for example, to loans secured by buildings with 5–36 units, provided these loans have a maximum 80 percent loan-to-value ratio and an 80 percent occupancy rate.

Nonresidential Construction and Land Loans

The banking agencies assign loans for real estate development and construction purposes to the 100 percent risk weight category. Weaknesses or losses associated with such loans would require reserves or charge-offs that would generally have the effect of reducing the capital base.

OTS generally assigns these loans to the same 100 percent risk category. However, if the amount of the loan exceeds 80 percent of the fair value of the property, that excess portion is deducted from capital in accordance with a phase-in arrangement, which ends on July 1, 1994.

Mortgage-backed Securities (MBS)

The federal banking agencies, in general, place privately-issued MBSs in a risk weight category appropriate to the underlying assets but in no case to the zero percent risk category. In the case of privately-issued MBSs where the direct underlying assets are mortgages, this treatment generally results in a risk weight of 50 percent or 100 percent. Privately-issued MBSs that have government agency or government-sponsored agency securities as their direct underlying assets are generally assigned to the 20 percent risk weight category.

The OTS assigns privately-issued high quality mortgage-related securities to the 20 percent risk-weight category. These are, generally, privately-issued MBSs with AA or better investment ratings.

At the same time, the banking agencies and the OTS automatically assign to the 100 percent risk weight category certain MBSs, including interest-only strips, residuals, and similar instruments that can absorb more than their pro rata share of loss. The Federal Reserve, in conjunction with the other banking agencies and the OTS, is in the process of developing more specific guidance as to the types of "high risk" MBSs that meet this definition.

Intangible Assets

The banking agencies do not allow goodwill to be included in risk-based capital for commercial banks and FDIC-supervised savings banks. Bank holding companies may include goodwill acquired prior to March 12, 1988 in Tier 1 for risk-based capital purposes until the end of 1992. After 1992, all good will is to be deducted from bank holding company capital. Goodwill is also excluded from the capital of banking organizations under the banking agencies' recently adopted Tier 1 leverage measures.

Pursuant to FIRREA, OTS allows "qualifying supervisory goodwill" to be included as part of core capital through year-end 1994. After this date, thrift institutions must meet their minimum core capital requirement without reliance on goodwill.

In considering whether other intangible assets should be included in capital, the banking agencies and OTS employ a three-part test. This test considers the reliability of the cash flows associated with the intangible asset, the existence of an active and liquid market for the asset, and the separability of the intangible asset from the bulk of the institution's other assets.

The Federal Reserve expects banks to avoid overreliance on any intangible assets, including purchased mortage servicing rights, within capital. In addition to excluding goodwill, the Federal Reserve gives close scrutiny to any other intangible assets that exceed 25 percent of Tier 1 capital, and, generally, would expect intangibles not to exceed this threshold. Furthermore, the Federal Reserve assesses an organization's tangible capital ratio (net of all intangibles), on a case-by-case basis, whenever the organization is undertaking expansion, engaging in new activities, or experiencing unusual risks. As a general rule, the Federal Reserve requires banking organizations seeking to expand to maintain capital positions substantially above minimum supervisory levels without significant reliance on intangible assets.

The OCC currently imposes a limit of 25 percent of Tier 1 capital on the amount of qualifying identifiable intangible assets, that is, those that meet the three-part test, that can be included in the risk-based capital calculation. At present, the only identifiable intangible asset that the OCC deems to meet the test is purchased mortgage servicing rights. In October, 1990, the OCC issued an advance notice of proposed rulemaking in which it sought comment on the advisability of introducing changes to the 25 percent limit and retaining the three-part test.

Currently, the FDIC generally deducts all intangible assets, except for purchased mortgage servicing rights, in calculating the leverage and risk-based capital ratios of banks and FDIC and FDIC-supervised savings banks. Effective January 10, 1991, the FDIC limits the amount of purchased mortgage servicing rights that state nonmember banks may include in their capital calculations to no more than 50 percent of core capital. In addition, the FDIC rule sets forth additional criteria for the valuation and recording of these intangible assets, the grandfathering of existing purchased mortgage servicing rights, and an exemption for purchased servicing rights held in a separately capitalized mortgage banking subsidiary.

Furthermore, in accordance with FIRREA and section 5(t)(4)(C) of the revised Home Owner's Loan Act of 1933, the FDIC's decision in this matter also will affect OTS-supervised savings institutions. In this regard, the FDIC's rule directly limits the amount of purchased mortgage servicing rights that savings associations can include in tangible capital under the OTS capital rules to no more than 100 percent of tangible capital. Also, the OTS has proposed a revision to its capital standards that would additionally limit the amount of purchased mortgage servicing rights that savings associations can recognize in core capital for leverage and risk-based capital purposes to no more than "50 percent of core capital" limit that the FDIC already applies to its state nonmember banks. In addition, as required by FIRREA, and consistent with the FDIC rule, the OTS pemits thrift institutions to include only 90 percent of the fair market value of purchased mortgage servicing rights in the calculation of the tangible capital, core

(leverage) capital, and risk-based capital ratios.

Under the OTS rule, the amount of any other identifiable intangible assets that meet a qualifying three-part test can only be included in core capital for leverage and risk-based capital purposes and only up to a limit of 25 percent of core capital.

Assets Sold with Recourse

In general, recourse arrangements allow the purchaser of an asset to "put" the asset back to the originating institution under certain circumstances, for example if the asset ceases to perform satisfactorily. This in turn can expose the originating institution to any loss associated with the asset. As a general rule, the federal banking agencies require that sales of assets involving any recourse be reported as financings and that the assets be retained on the balance sheet. This, in turn, has the effect of requiring a full leverage and risk-based capital charge whenever assets are sold with recourse, including limited recourse. The Federal Reserve generally applies a capital charge to any recourse arrangement that is the equivalent of an off-balance sheet guarantee, regardless of the nature of the transaction that gives rise to the recourse obligation.

An exception to this general rule involves pools of 1- to 4-family residential mortages and to certain farm mortgage loans (see Section 2 of this appendix, "Sales of Assets With Recourse" for further details). Certain recourse transactions involving these assets are reported in the bank Call Report as sales, thereby removing these transactions from leverage ratio calculations. These transactions, which are the equivalent of off-balance sheet guarantees, involve the type of credit risk that is addressed by bank risk-based capital requirements, although some questions in this regard have been raised because of the treatment afforded these transactions for leverage purposes. The Federal Reserve is clarifying its risk-based capital guidelines to ensure that recourse sales involving residential mortages are to be taken into account for determining compliance with risk-based capital requirements.

In general, OTS also requires a full capital charge against assets sold with recourse. However, in the case of limited recourse, OTS limits the capital charge to the lesser of the amount of recourse or the actual amount of capital that would otherwise be required against that asset, that is, the normal full capital charge.

Some securitized asset arrangements involve the issuance of senior and subordinated classes of securities. When a bank originates such a transaction and retains a subordinated piece, the banking agencies require that capital be maintained against the entire amount of the asset pool. When a bank acquires a subordinated security in a pool of assets that it did not originate, the banking agencies assign the investment in the subordinated piece to the 100 percent risk-weight category. In addition, the Federal Reserve carefully reviews these instruments to determine if additional reserves, asset write-downs, or capital are necessary to protect the bank.

OTS requires that capital be maintained against the entire amount of the asset pool in both of the situations described in the preceding paragraph. Additionally, the OTS applies a capital charge to the full amount of assets being serviced when the servicer is required to absorb credit losses on the assets being serviced.

In 1990, the federal bank and thrift supervisory agencies under the Federal Financial Institutions Examination Council (FFIEC) issued for public comment a factfinding paper pertaining to the full range of issues relating to recourse arrangements. These issues include the definition of "recourse" and the appropriate reporting and capital treatments to be applied to recourse arrangements, as well as so-called recourse servicing arrangements and limited recourse. The objective of this effort is to develop in a comprehensive and consistent fashion an appropriate and uniform approach to recourse arrangements for capital adequacy, reporting, and other regulatory purposes. The comments received were very extensive and generally illustrated the extreme complexity of the subject. In view of the project's significance and complexity, the FFIEC in December 1990 decided to narrow the scope of the initial phase of the recourse project to credit-related risks, including the appropriate treatment of credit-related recourse arrangements that involve limited recourse or that support a third party's assets.

Agricultural Loan Loss Amortization

In the computation of regulatory capital, those banks accepted into the agricultural loan loss amortization program pursuant to Title VIII of the Competitive Equality Banking Act of 1987 are permitted to defer and amortize losses incurred on agricultural loans between January 1, 1984 and December 31, 1991. The program also applies to losses incurred between January 1, 1983 and December 31, 1991, as a result of reappraisals and sales of agricultural Other Real Estate Owned and agricultural personal property. Thrifts are not eligible to participate in the agricultural loan loss amortization program established by this statute.

Treatment of Junior Liens on 1- to 4-Family Properties

In some cases, a banking organization may make two loans on a single residential property, one loan secured by a first lien, the other by a second lien. In such a situation, the Federal Reserve and the FDIC view these two transactions as a single loan, provided there are no intervening liens. This could result in assigning the total amount of these transactions to the 100 percent risk weight category, if, in the aggregate, the two loans exceeded a prudent loan-to-value ratio and, therefore, did not qualify for the 50 percent risk weight. This approach is intended to avoid possible circumvention of the capital requirements and capture the risks associated with the combined transactions.

The OCC and OTS generally assigned the loan secured by the first lien to the 50 percent risk-weight category and the loan secured by the second lien to the 100 percent risk-weight category.

Phase-in Requirements

The banking agencies, consistent with the Basle Accord, have adopted transition rules for a two-year period beginning December 31, 1990. During this period, banks will be required to maintain at least 7.25 percent risk-based capital, and may take advantage of certain transitional rules. For example, up to 10 percent of Tier 1 capital can be comprised of Tier 2 capital elements through the end of 1992. On December 31, 1992, the transition rules expire. After that date, Tier 1 is limited to core capital elements and all banks must maintain at least an 8 percent risk-based capital ratio. As a practical matter, most banking organizations are evaluating themselves in relation to the 1992 definition and have been urged to meet this more stringent standard as soon as possible. As already noted, all of the risk-based standards are minimums and banking organizations are generally expected to operate above the minimum levels.

OTS was required by statute to implement its risk-based capital guidelines by December 7, 1989. FIRREA also provides for a different set of transition rules than those afforded banks, although the ultimate date for full

implementation is approximately the same. Thrifts are required to maintain 90 percent of the 8 percent risk-based capital standard until December 30, 1992 and 100 percent thereafter.

Pledged Deposits and Nonwithdrawable Accounts

The capital guidelines of OTS permit thrift institutions to include in capital certain pledged deposits and nonwithdrawable accounts that meet OTS criteria. Income Capital Certificates and Mutual Capital Certificates held by OTS may also be included in capital by thrift institutions. These instruments are not relevant to commercial banks and therefore they are not addressed in the banking agencies' capital guidelines.

Mutual Funds

The banking agencies assign all of a bank's holdings in a mutual fund to the risk category appropriate to the highest risk asset that a particular mutual fund is permitted to hold under its operating rules. The purpose of this is to take into account the maximum degree of risk to which a bank may be exposed when investing in a mutual fund in view of the fact that the future composition and risk characteristics of the fund's holdings cannot be known in advance.

The OTS applies a capital charge appropriate to the riskiest asset that a mutual fund is actually holding at a particular time. In addition, the OTS guidelines also permit, on a case-by-case basis, investments in mutual funds to be allocated on a pro rata basis in a manner consistent with the actual composition of the mutual fund.

Section Two—Summary of Differences in Reporting Standards Among Federal Banking and Thrift Supervisory Agencies

Under the auspices of the Federal Financial Institutions Examination Council, the three federal banking agencies have developed uniform reporting standards for commercial banks which are used in the preparation of the Reports of Condition and Income ("Call Report"). The FDIC has also applied these uniform Call Report standards to savings banks under its supervision. The income statement and balance sheet accounts presented in the Call Report are used by the federal bank supervisory agencies for determining the capital adequacy of banks and for other regulatory, supervisory, surveillance, analytical, and general statistical purposes. The reporting standards set forth in the Call Report are based almost entirely on generally accepted accounting principles (GAAP) for banks, and, as a matter of policy, deviate from GAAP only in those instances where statutory requirements or overriding supervisory concerns warrant a departure from GAAP. Thus, it so far as the federal bank supervisory agencies are concerned, uniform accounting standards for regulatory purposes have been established.

The OTS has developed and maintains a separate reporting system for the thrift institutions under its supervision. This report, known as the Thrift Financial Report (TFR), is based on GAAP as applied by thrifts, which differs in some respects from GAAP for banks. The following discussion addresses the differences in reporting standards among the federal banking agencies and OTS.

Specific Valuation Allowances for, and Charge-Offs of, Troubled Real Estate Loans Not in Foreclosure

The banking agencies generally consider real estate loans that lack acceptable cash flow or other ready sources of repayment, other than the collateral, as "collateral dependent." When a real estate loan is considered to be collateral dependent and the fair value of the collateral has declined below the loan balance, a charge-off may be taken or a specific valuation allowance created to reduce the value of the loan to an amount that is deemed to be collectible considering the fair value of the underlying collateral as generally determined by a current appraisal. The banking agencies believe that this approach accurately reflects the amount of repayment that a financial institution is likely to receive when reasonable prospects for the recovery of the value and cash flows of the collateral exist, or when it is forced to foreclose on the underlying collateral. This approach, followed by the banking agencies, is basically consistent with GAAP for banks.

OTS generally requires specific valuation allowances for troubled real estate loans based on the estimated net realizable value (NRV) of the collateral. NRV represents the estimated future sales price reduced by certain expenses and direct holding costs, including the cost of capital. Thus, NRV is based on the expected cash flows derived from the property discounted by the institution's cost of capital. NRV may exceed fair value. If additional safety and soundness concerns exist, OTS examiners may require additional general valuation allowances based on historical experience and other criteria.

OTS is intending to propose a new policy that will generally be consistent with the policies of the banking agencies. Furthermore, the Financial Accounting Standards Board (FASB) has recently begun a project that is intended to conform the accounting practices of thrift and banking organizations in this area.

General Valuation Allowances for Troubled Real Estate Loans

The banking agencies expect the general valuation allowance (i.e., the allowance for loan and lease losses) to be sufficient to cover an estimate of anticipated losses on all loans in the portfolio, including the remaining balances of individual loans that have been partially charged-off or for which specific valuation allowances have been established. This approach appropriately reflects the risk of additional loss from possible error in the specific loss estimates. The general valuation allowances required by the banking agencies and GAAP are basically consistent.

Although historically general valuation allowances for thrifts have been less than those for banks, the OTS now follows an approach that is generally consistent with that of the banking regulators.

Valuation of Foreclosed Real Estate

The banking agencies require that foreclosed real estate be valued at the lower of book value or fair value at the debate of foreclosure. The banking regulators usually require additional write-downs of such other real estate owned to fair value when fair value declines after foreclosure. The approach followed by the banking agencies is consistent with GAAP for banks.

OTS also requires foreclosed real estate to be valued at the lower of book value or fair value at the date of foreclosure. However, valuation allowances for real estate owned after the acquisition date are generally based on the NRV of the property using a cost of capital discount rate.

OTS is intending to propose a new policy that would be consistent with that of the banking agencies. In addition, the American Institute of Certified Public Accountants (AICPA) has recently proposed a standard that would extend the approach followed by the banking agencies to thrift organizations and thus would eliminate this difference between bank and thrift reporting.

Futures and Forward Contracts

The banking agencies, as a general rule, do not permit the deferral of losses by banks on futures and forwards whether or not they are used for hedging purposes. All changes in market value of

futures and forward contracts are reported in current period income. The banking agencies adopted this reporting standard as a supervisory policy prior to the adoption of FASB Statement No. 80, which allows hedge or loss deferral accounting, under certain circumstances. Contrary to this general rule, hedge accounting in accordance with FASB Statement No. 80 is permitted for futures and forward contracts used in mortgage banking operations. A proposal to permit banks to use hedge accounting for futures contracts beyond their mortgage banking operations is being considered.

OTS practice is to follow FASB Statement No. 80 for futures contracts. In accordance with this statement, when hedging criteria are satisfied, the accounting for the futures contract is related to the accounting for the hedged item. Changes in the market value of the futures contract are recognized in income when the effects of related changes in the price or interest rate of the hedged item are recognized. Such reporting can result in deferred losses which would be reflected as assets on the thrift's balance sheet in accordance with GAAP.

Excess Servicing Fees

As a general rule, the banking agencies do not follow GAAP for excess servicing fees, but require a more conservative treatment. Excess servicing results when loans are sold with servicing retained and the stated servicing fee rate is greater than the normal servicing fee rate. With the exception of sales of pools of residential mortgages for which the banking agencies' approach is consistent with FASB Statement No. 65, excess servicing fee income in banks must be reported as realized over the life of the transferred asset, not recognized up front.

OTS allows the present value of the future excess servicing fee to be treated as an adjustment to the sales price for purposes of recognizing gain or loss on the sale. This appproach is consistent with FASB Statement No. 65.

In-substance Defeasance of Debt

The banking agencies do not permit banks to report defeasance of their debt obligations in accordance with FASB Statement No. 76. Defeasance involves a debtor irrevocably placing risk-free monetary assets in a trust solely for satisfying the debt. Where this is permitted, the assets in the trust and the defeased debt are removed from the balance sheet and a gain or loss for the current period can be recognized. Commercial banks are not permitted to defease their debt obligations for reporting or supervisory purposes. Thus, banks may not remove assets or liabilities from their balance sheets or recognize resulting gains or losses. The banking agencies have not adopted FASB Statement No. 76 because of uncertainty regarding the irrevocable trusts established for defeasance purposes. Furthermore, defeasance would not relieve the bank of its contractual obligation to pay depositors or other creditors.

OTS practice is to follow FASB Statement No. 76.

Sales of Assets with Recourse

In accordance with FASB Statement No. 77, a transfer of receivables with recourse is recognized as a sale if: (1) The transferor surrenders control of the future economic benefits, (2) the transferor's obligation under the recourse provisions can be reasonably estimated, and (3) the transferee cannot require repurchase of the receivables except pursuant to the recourse provisions.

The practice of the banking agencies is generally to require commercial banks to report transfers of receivables with recourse as sales *only* when the transferring institution (1) retains no risk of loss from the assets transferred and (2) has no obligation for the payment of principal or interest on the assets transferred. As a result, virtually no transfers of assets with recourse can be reported as true sales. However, this rule has not historically been applied to the transfer of 1- to 4-family or agricultural mortgage loans under certain government-sponsored programs (including the Federal National Mortgage Association and the Federal Home Loan Mortgage Corporation). Transfers of mortgages under these programs are generally treated as sales for Call Report purposes. Furthermore, private transfers of mortgages are also reported as sales if the transferring institution retains only an insignificant risk of loss on the assets transferred. However, the seller's obligation under recourse provisions related to sales of mortgage loans under the government programs is viewed as an off-balance sheet exposure. Thus, for risk-based capital purposes, capital is generally expected to be held for recourse obligations associated with such transactions.

OTS policy is to follow FASB Statement No. 77. However, in the calculation of risk-based capital under OTS guidelines, off-balance sheet recourse obligations are converted at 100 percent. This effectively negates the sale treatment recognized on a GAAP basis for risk-based capital purposes, but not for leverage capital purposes.

Last year, the banking and thrift regulatory agencies requested public comment on recourse arrangements. This request for comment could be the basis for a proposed rule that would potentially conform the reporting practices of the banking agencies and OTS in this area.

Board of Governors of the Federal Reserve System, August 30, 1991.

William W. Wiles,

Secretary of the Board.

[FR Doc. 91-21349 Filed 9-5-91; 8:45 am]

BILLING CODE 6210-01-M

First Manistique Corporation; Notice of Application to Engage de novo in Permissible Nonbanking Activities

The company listed in this notice has filed an application under § 225.23(a)(1) of the Board's Regulation Y (12 CFR 225.23(a)(1)) for the Board's approval under section 4(c)(8) of the Bank Holding Company Act (12 U.S.C. 1843(c)(8)) and § 225.21(a) of Regulation Y (12 CFR 225.21(a)) to commence or to engage *de novo*, either directly or through a subsidiary, in a nonbanking activity that is listed in § 225.25 of Regulation Y as closely related to banking and permissible for bank holding companies. Unless otherwise noted, such activities will be conducted throughout the United States.

The application is available for immediate inspection at the Federal Reserve Bank indicated. Once the application has been accepted for processing, it will also be available for inspection at the offices of the Board of Governors. Interested persons may express their views in writing on the question whether consummation of the proposal can "reasonably be expected to produce benefits to the public, such as greater convenience, increased competition, or gains in efficiency, that outweigh possible adverse effects, such as undue concentration of resources, decreased or unfair competition, conflicts of interests, or unsound banking practices." Any request for a hearing on this question must be accompanied by a statement of the reasons a written presentation would not suffice in lieu of a hearing, identifying specifically any questions of fact that are in dispute, summarizing the evidence that would be presented at a hearing, and indicating how the party commenting would be aggrieved by approval of the proposal.

Comments regarding the application must be received at the Reserve Bank

indicated or the offices of the Board of Governors not later than September 27, 1991.

A. Federal Reserve Bank of Minneapolis (James M. Lyon, Vice President) 250 Marquette Avenue, Minneapolis, Minnesota 55480:

1. First Manistique Corporation, Manistique, Michigan; to engage *de novo* in collecting overdue accounts receivable, both retail and commercial, for various entities unrelated to First Manistique Corporation pursuant to § 225.25(b)(23); and performing appraisals of real estate pursuant to § 225.25(b)(13) of the Board's Regulation Y. These activities will be conducted in the State of Michigan.

Board of Governors of the Federal Reserve System, August 30, 1991.

Jennifer J. Johnson,

Associate Secretary of the Board.

[FR Doc. 91-21350 Filed 9-5-91; 8:45 am]

BILLING CODE 6210-01-F

Heartland Financial USA, Inc., et al.; Formations of; Acquisitions by; and Mergers of Bank Holding Companies

The companies listed in this notice have applied for the Board's approval under section 3 of the Bank Holding Company Act (12 U.S.C. 1842) and § 225.14 of the Board's Regulation Y (12 CFR 225.14) to become a bank holding company or to acquire a bank or bank holding company. The factors that are considered in acting on the applications are set forth in section 3(c) of the Act (12 U.S.C. 1842(c)).

Each application is available for immediate inspection at the Federal Reserve Bank indicated. Once the application has been accepted for processing, it will also be available for inspection at the offices of the Board of Governors. Interested persons may express their views in writing to the Reserve Bank or to the offices of the Board of Governors. Any comment on an application that requests a hearing must include a statement of why a written presentation would not suffice in lieu of a hearing, identifying specifically any questions of fact that are in dispute and summarizing the evidence that would be presented at a hearing.

Unless otherwise noted, comments regarding each of these applications must be received not later than September 27, 1991.

A. Federal Reserve Bank of Chicago (David S. Epstein, Vice President) 230 South LaSalle Street, Chicago, Illinois 60690:

1. Heartland Financial USA, Inc., Dubuque, Iowa; to acquire 100 percent of the voting shares of Galena Bancorp, Inc., Galena, Illinois, and thereby indirectly acquire Galena State Bank and Trust Company, Galena, Illinois.

2. Nichols Bancorp, Inc., Nichols, Wisconsin; to become a bank holding company by acquiring 80 percent of the voting shares of The State Bank of Nichols, Nichols, Wisconsin.

B. Federal Reserve Bank of St. Louis (Randall C. Sumner, Vice President) 411 Locust Street, St. Louis, Missouri 63166:

1. Senath Bancshares, Inc., Senath, Missouri; to become a bank holding company by acquiring 100 percent of the voting shares of Senath State Bank, Senath, Missouri.

C. Federal Reserve Bank of Dallas (W. Arthur Tribble, Vice President) 400 South Akard Street, Dallas, Texas 75222:

1. Farmersville Bancshares, Inc., Farmersville, Texas; to acquire 100 percent of the voting shares of First Bank, McKinney, Texas, a *de novo* bank.

Board of Governors of the Federal Reserve System, August 30, 1991.

Jennifer J. Johnson,

Associate Secretary of the Board.

[FR Doc. 91-21351 Filed 9-5-91; 8:45 am]

BILLING CODE 6210-01-F

Frances Gourley Lott Trust, et al.; Change in Bank Control Notices; Acquisitions of Shares of Banks or Bank Holding Companies

The notificants listed below have applied under the Change in Bank Control Act (12 U.S.C. 1817(j)) and § 225.41 of the Board's Regulation Y (12 CFR 225.41) to acquire a bank or bank holding company. The factors that are considered in acting on the notices are set forth in paragraph 7 of the Act (12 U.S.C. 1817(j)(7)).

The notices are available for immediate inspection at the Federal Reserve Bank indicated. Once the notices have been accepted for processing, they will also be available for inspection at the offices of the Board of Governors. Interested persons may express their views in writing to the Reserve Bank indicated for that notice or to the offices of the Board of Governors. Comments must be received not later than September 27, 1991.

A. Federal Reserve Bank of Dallas (W. Arthur Tribble, Vice President) 400 South Akard Street, Dallas, Texas 75222:

1. Frances Gourley Lott Trust, Fort Worth, Texas, to acquire 7 percent; Mary Theresa Lott Trust, Fort Worth, Texas, to acquire 33 percent; Gayle Gourley Trust, Fort Worth, Texas, to acquire 34 percent; and W.J. Gourley III Trust, Fort Worth, Texas, to acquire 26 percent of the voting shares of Security Bank of Arlington, Arlington, Texas.

B. Federal Reserve Bank of San Francisco (Kenneth R. Binning, Director, Bank Holding Company) 101 Market Street, San Francisco, California 94105:

1. Harry T. Goss, Phoenix, Arizona; to retain 23.36 percent of the voting shares of Republic National Bancorp, Phoenix, Arizona, and thereby indirectly acquire Republic National Bank of Arizona, Phoenix, Arizona.

Board of Governors of the Federal Reserve System, August 30, 1991.

Jennifer J. Johnson,

Associate Secretary of the Board.

[FR Doc. 91-21352 Filed 9-5-91; 8:45 am]

BILLING CODE 6210-01-F

The Sumitomo Bank, Ltd.; Acquisition of Company Engaged in Nonbanking Activities; Correction

This notice corrects a previous *Federal Register* notice (FR Doc. 91-20600) published at page 42626 of the issue for Wednesday, August 28, 1991.

Under the Federal Reserve Bank of San Francisco, the entry for The Sumitomo Bank, Ltd. is amended to read as follows:

A. Federal Reserve Bank of San Francisco (Kenneth R. Binning, Director, Bank Holding Company) 101 Market Street, San Francisco, California 94105:

1. The Sumitomo Bank, Ltd., Osaka, Japan; to expand swap activities of Sumitomo Bank Capital Markets, Inc., New York, New York, by establishing a Hong Kong branch office of its wholly-owned subsidiary, SBCM (U.K.), Ltd., London, England. Applicant will engage in the following activity:

1. Intermediating in the internal swap markets by acting as originator and principal in interest rate swap and currency swap transactions;

2. Acting as originator and principal with respect to certain risk-management products such as caps, floors and collars, as well as options on swaps, caps, floors and collars ("swap derivative products");

3. Acting as a broker or agent with respect to the foregoing transactions and instruments; and

4. Acting as an adviser to institutional customers regarding financial strategies involving interest rate and currency swaps and swap derivative products.

75 Federal Reserve Bulletin 582 (1989).

Comments on this application must be received by September 16, 1991

Board of Governors of the Federal Reserve System, August 30, 1991.

Jennifer J. Johnson,

Associate Secretary of the Board.

[FR Doc. 91-21353 Filed 9-5-91; 8:45 am]

BILLING CODE 6210-01-F

DEPARTMENT OF HEALTH AND HUMAN SERVICES

Alcohol, Drug Abuse, and Mental Health Administration

National Institute of Mental Health; Meetings

Pursuant to Public Law 92-463, notice is hereby given of the meetings of the advisory committees of the National Institute of Mental Health for October 1991.

The initial review groups will be performing review of applications for Federal assistance; therefore, portions of these meetings will be closed to the public as determined by the Administrator, ADAMHA, in accordance with 5 U.S.C. 552b(c)(6) and 5 U.S.C. app. 2 10(d).

The Advisory Panel on Alzheimer's Disease will be discussing drafts for the Panel's third annual report and a supplemental report on ethnic and cultural issues in Alzheimer's disease, plans for the Panel's fourth annual report, and other business before the Advisory Panel.

Summaries of the meetings and rosters of committee members may be obtained from: Ms. Joanna L. Kieffer, NIMH Committee Management Officer, Alcohol, Drug Abuse, and Mental Health Administration, Parklawn Building, room 9-105, 5600 Fishers Lane, Rockville, MD 20857 (Telephone: 301-443-4333).

Substantive program information may be obtained from the contacts whose names, room numbers, and telephone numbers are listed below.

* * * * *

Committee Name: Behavioral Neurobiology Subcommittee, Neurosciences Research Review Committee.

Meeting Date: October 9-11, 1991.

Place: Crowne Plaza Holiday Inn, 1750 Rockville Pike, Rockville, MD 20852.

Open: October 9, 8:30—9:30 a.m.

Closed: Otherwise.

Contact: Bill Radcliffe, room 9C-18, Parklawn Building, Telephone (301) 443-3857.

* * * * *

Committee Name: Aging Subcommittee, Life Course and Prevention Research Review Committee.

Meeting Date: October 10-11, 1991.

Place: Residence Inn, 7335 Wisconsin Avenue, Bethesda, MD 20814.

Open: October 10, 9-10 a.m.

Closed: Otherwise.

Contact: Phyllis Zusman, room 9C-18, Parklawn Building, Telephone (301) 443-3857.

* * * * *

Committee Name: Psychobiology and Behavior Research Review Committee.

Meeting Date: October 10-11, 1991.

Place: The Inn at Foggy Bottom, 824 New Hampshire Avenue, NW., Washington, DC 20037.

Open: October 10, 9-a.m.

Closed: Otherwise.

Contact: Debra D. Woods, room 9C-18, Parklawn Building, Telephone (301) 443-3936.

* * * * *

Committee Name: Cognition, Emotion, and Personality Research Review Committee.

Meeting Date: October 10-12, 1991.

Place: Quality Hotel, 1315 16th Street, NW., Washington, DC 20036.

Open: October 10, 9-10 a.m.

Closed: Otherwise.

Contact: Linda Keperling, room 9C-18, Parklawn Building, Telephone (301) 443-3936.

* * * * *

Committee Name: Psychopharmacological, Biological, and Physical Treatments Subcommittee, Treatment Development and Assessment Research Review Committee.

Meeting Date: October 15-16, 1991.

Place: Embassy Suites Hotel, 4300 Military Road, NW., Washington, DC 20015.

Open: October 15, 9-10 a.m.

Closed: Otherwise.

Contact: Helen Craig, room 9C-14, Parklawn Building, Telephone (301) 443-1367.

* * * * *

Committee Name: Criminal and Violent Behavior Research Review Committee.

Meeting Date: October 16-18, 1991.

Place: Quality Hotel, 1315 16th Street, NW., Washington, DC 20036.

Open: October 16, 9-10 a.m.

Closed: Otherwise.

Contact: Gwen Artis, room 9C-18, Parklawn Building, Telephone (301) 443-3944.

* * * * *

Committee Name: Clinical Biology Subcommittee, Psychopathology and Clinical Biology Research Review Committee.

Meeting Date: October 16-18, 1991.

Place: The Hampshire Hotel, 1310 New Hampshire Avenue, NW., Washington, DC 20036.

Open: October 16, 9-10 a.m.

Closed: Otherwise.

Contact: Maureen Eister, room 9C-08, Parklawn Building, Telephone (301) 443-1340.

* * * * *

Committee Name: Extramural Science Advisory Board, NIHM.

Meeting Date: October 17-18, 1991.

Place: Conference Room 4, Building 31, National Institutes of Health, 9000 Wisconsin Avenue, Bethesda, MD 20892.

Open: October 17 and 18, 8:30 a.m.-5 p.m.

Contact: Anthony Pollitt, room 17C-26, Parklawn Building, Telephone (301) 443-3175.

* * * * *

Committee Name: Cellular Neurobiology and Psychopharmacology Research Subcommittee, Neurosciences Research Review Committee.

Meeting Date: October 17-18, 1991.

Place: Georgetown Marbury Hotel, 3000 M Street, NW., Washington, DC 20007.

Open: October 17, 8-9 a.m.

Closed: Otherwise.

Contact: Camille Sookram, room 9C-18, Parklawn Building, Telephone (301) 443-3936.

* * * * *

Committee Name: Small Business Research Review Committee.

Meeting Date: October 21-22, 1991.

Place: Washington Marriott Hotel, 1221 22nd Street, NW., Washington, DC 20037.

Open: October 21, 9-10:30 a.m.

Closed: Otherwise.

Contact: Gloria Levin, room 9C-14, Parklawn Building, Telephone (301) 443-1367.

* * * * *

Committee Name: Psychopathology Subcommittee, Psychopathology and Clinical Biology Research Review Committee.

Meeting Date: October 23-25, 1991.

Place: Bethesda Holiday Inn, 8120 Wisconsin Avenue, Bethesda, MD 20814.

Open: October 23, 1:30-2:30 p.m.

Closed: Otherwise.

Contact: Tammye Cross, room 9C-08, Parklawn Building, Telephone (301) 443-1340.

* * * * *

Committee Name: Advisory Panel on Alzheimer's Disease.

Meeting Date: October 24-25, 1991.

Place: William Penn Room, Wyndham Bristol Hotel, 2430 Pennsylvania Avenue, NW., Washington, DC 20037.

Open: October 24, 9 a.m.-5:30 p.m. October 25, 9 a.m.-3 p.m.

Contact: George Niederehe, room 7-103 Parklawn Building, Telephone (301) 443-1185.

* * * * *

Committee Name: Child and Family and Prevention Subcommittee, Life Course and Prevention Research Review Committee.

Meeting Date: October 24-26, 1991.

Place: Chevy Chase Holiday Inn, 5520 Wisconsin Avenue, Chevy Chase, MD 20815.

Open: October 24, 9-10 a.m.

Closed: Otherwise.

Contact: Shirley Maltz, room 9C-18, Parklawn Building, Telephone (301) 443-3857.

* * * * *

Committee Name: Mental Health Behavioral Sciences Research Review Committee.

Meeting Date: October 24-26, 1991.

Place: The River Inn, 924 25th Street, NW., Washington, DC 20037.

Open: October 24, 9-9:30 a.m.

Closed: Otherwise.

Contact: Bernice Cherry, room 9C-18, Parklawn Building, Telephone (301) 443-3936.

* * * * *

Committee Name: Psychosocial and Biobehavioral Treatments Subcommittee, Treatment Development and Assessment Research Review Committee.

Meeting Date: October 28-29, 1991.

Place: The Washington Vista Hotel, 1400 M Street, NW., Washington, DC 20036.

Open: October 28, 9-10:00 a.m.

Closed: Otherwise.

Contact: Dr. Emeline Otey, room 9C-02, Parklawn Building, Telephone (301) 443-4866.

* * * * *

Committee Name: Epidemiology Research Subcommittee, Epidemiologic and Services Research Review Committee.

Meeting Date: October 28-30, 1991.

Place: Embassy Suites Hotel, 4300 Military Road, NW., Washington, DC 20015.

Open: October 28, 9-10 a.m.

Closed: Otherwise.

Contact: Gloria Yockelson, room 9C-05, Parklawn Building, Telephone (301) 443-0948.

* * * * *

Dated: August 30, 1991.

Peggy W. Cockrill,

Committee Management Officer, Alcohol, Drug Abuse, and Mental Health Administration.

[FR Doc. 91-21406 Filed 9-5-91; 8:45 am]

BILLING CODE 4160-20-M

National Institutes of Health

Establishment: Comparative Medicine Review Committee

Pursuant to the Federal Advisory Committee Act of October 6, 1972 [Pub. L. 92-463, Stat. 770-776] and section 402(b)(6), of the Public Health Service Act, as amended [42 U.S. Code 282(b)(6)], the Director, National Institutes of Health (HIH), announces the establishment of the Comparative Medicine review Committee.

The Comparative Medicine Review Committee shall advise the Director, NIH, and the Director, NCRR, concerning applications for grants-in-aid and cooperative agreements relating to colonies of special research animals; development and definition of animal models, development and improvement of institutional animal resources programs; comparative medicine research care; research projects to improve animal resources and regional primate research centers; and contract proposals related to the Comparative Medicine programs. Advises on the development of scientific programs, facilities, and resources for laboratory animal medicine and research, on program development of the primate research centers, and on pertinent administrative policies.

Duration of this committee is continuing unless formally determined by the Director, NIH, that termination would be in the best public interest.

Dated: August 28, 1991.

Bernadine Healy,

Director, National Institutes of Health.

[FR Doc. 91-21331 Filed 9-5-91; 8:45 am]

BILLING CODE 4140-01-M

National Heart, Lung, and Blood Institute; Meeting of the Sickle Cell Disease Advisory Committee

Pursuant to Public Law 92-463, notice is hereby given of the meeting of the Sickle Cell Disease Advisory Committee, National Heart, Lung, and Blood Institute, October 4, 1991. The meeting will be held at the National Institutes of Health, 9000 Rockville Pike, Building 31, Conference Room 8, C-Wing, Bethesda, Maryland 20892.

The entire meeting will be open to the public from 9 a.m. to adjournment to discuss recommendations on the implementation and evaluation of the Sickle Cell Disease Program. Attendance by the public will be limited to space available.

Ms. Terry Bellicha, Chief, Communications and Public Information Branch, National Heart, Lung, and Blood Institute, Building 31, room 4A21, Bethesda, Maryland 20892, (301) 436-4236, will provide a summary of the meeting and a roster of the committee members upon request. Dr. Clarice D. Reid, Chief, Sickle Cell Disease Branch, Division of Blood Diseases and Resources, NHLBI, Federal Building, room 508, Bethesda, Maryland 20892, (301) 496-6931, will furnish substantive program information.

(Catalog of Federal Domestic Assistance Program No. 93.839, Blood Diseases and Resources Research, National Institutes of Health.)

Dated: August 28, 1991.

Jeanne N. Ketley,

Acting Committee Management Officer, NIH.

[FR Doc. 91-21332 Filed 9-5-91; 8:45 am]

BILLING CODE 4140-01-M

National Heart, Lung, and Blood Institute; Meeting of Pulmonary Diseases Advisory Committee

Pursuant to Public Law 92-463, notice is hereby given of the meeting of the Pulmonary Diseases Advisory Committee, National Heart, Lung, and Blood Institute, October 21-22, 1991, at Prospect Associates, 1801 Rockville Pike, suite 500, Rockville, Maryland 20852.

The entire meeting will be open to the public from 1 p.m. to 5 p.m. on Monday, October 21 and on October 22 from 8:30 a.m. to adjournment. The Committee will discuss the current status of the Division of Lung Diseases' programs and Committee plans for fiscal years 1992-1993. Attendance by the public will be limited to space available.

Ms. Terry Bellicha, Chief, Communications and Public Information Branch, National Heart, Lung, and Blood Institute, Building 31, room 4A-21, National Institutes of Health, Bethesda, Maryland 20892, (301) 496-4236, will provide a summary of the meeting and a roster of the Committee members.

Dr. Suzanne S. Hurd, Executive Secretary of the Committee, Westwood Building, room 6A16, National Institutes of Health, Bethesda, Maryland 20892, (301) 496-7208, will furnish substantive program information.

(Catalog of Federal Domestic Assistance Program No. 93.838, Lung Diseases Research, National Institutes of Health.)

Dated: August 28, 1991.

Jeanne N. Ketley,

Acting Committee Management Officer, NIH.

[FR Doc. 91-21333 Filed 9-5-91; 8:45 am]

BILLING CODE 4140-01-M

National Heart, Lung, and Blood Institute; Meeting of the Cardiology Advisory Committee

Pursuant to Public Law 92–463, notice is hereby given of the meeting of the Cardiology Advisory Committee, National Heart, Lung, and Blood Institute, October 21–22, 1991, Building 31C, Conference Room 8, National Institutes of Health, 9000 Rockville Pike, Bethesda, Maryland 20892.

The entire meeting will be open to the public on October 21 from 11 a.m. to 5 p.m. and on October 22 from 9 a.m. to adjournment. Attendance by the public will be limited to space available. Topics for discussion will include a review of the research programs relevant to the Cardiology area and consideration of future needs and opportunities.

Terry Bellicha, Chief, Communications and Public Information Branch, National Heart, Lung, and Blood Institute, room 4A21, Building 31, National Institutes of Health, Bethesda, Maryland 20892, (301) 496–4236, will provide a summary of the meeting and a roster of the committee members.

Michael J. Horan, M.D., Associate Director for Cardiology, Division of Heart and Vascular Diseases; National Heart, Lung, and Blood Institute; room 320, Federal Building, Bethesda, Maryland 20892, (301) 496–4521, will furnish substantive program information upon request.

(Catalog of Federal Domestic Assistance Program No. 93.837, Heart and Vascular Diseases Research, National Institutes of Health)

Dated: August 28, 1991.

Jeanne N. Ketley,

Acting Committee Management Officer, NIH.

[FR Doc. 91–21334 Filed 9–5–91; 8:45 am]

BILLING CODE 4140–01–M

National Heart, Lung, and Blood Institute; Meeting of the Clinical Applications and Prevention Advisory Committee

Pursuant to Public Law 92–463, notice is hereby given of the meeting of the Clinical Applications and Prevention Advisory Committee, National Heart, Lung, and Blood Institute, National Institutes of Health, on October 21–22, 1991. The meeting will be held on October 21 in Wilson Hall, Building 1, and on October 22 in Conference Room 4, Building 31, both at the National Institutes of Health, 9000 Rockville Pike, Bethesda, Maryland 20892.

The entire meeting will be open to the public from 9 a.m. to recess on October 21 and 8:30 a.m. to adjournment on October 22 to discuss new initiatives, program policies, and issues. Attendance by the public will be limited to space available.

Terry Bellicha, Chief, Communications and Public Information Branch, National Heart, Lung, and Blood Institute, Building 31, room 4A21, National Institutes of Health, Bethesda, Maryland 20892, (301) 496–4236, will provide a summary of the meeting and a roster of committee members upon request.

Dr. Lawrence Friedman, Acting Director, Division of Epidemiology and Clinical Applications, Federal Building, room 212, Bethesda, Maryland 20892, (301) 496–2533, will furnish substantive program information.

(Catalog of Federal Domestic Assistance Program No. 93.837, Heart and Vascular Diseases Research, National Institutes of Health.)

Dated: August 28, 1991.

Jeanne N. Ketley,

Acting Committee Management Officer, NIH.

[FR Doc. 91–21335 Filed 9–5–91; 8:45 am]

BILLING CODE 4140–01–M

National Heart, Lung and Blood Institute; Meeting of the Arteriosclerosis, Hypertension and Lipid Metabolism Advisory Committee

Pursuant to Public Law 92–463, notice is hereby given of the meeting of the Arteriosclerosis, Hypertension and Lipid Metabolism Advisory Committee, National Heart, Lung and Blood Institute, October 21–22, 1991, Building 31, Conference Room 9, C–Wing, National Institutes of Health, Bethesda, Maryland 20892.

The entire meeting will be open to the public from approximately 11 a.m. to recess on October 21, and 9 a.m. to adjournment on October 22, to evaluate program support in arteriosclerosis, hypertension and lipid metabolism. Attendance by the public will be limited on a space available basis.

Ms. Terry Bellicha, Chief, Communications and Public Information Branch, National Heart, Lung and Blood Institute, Building 31, room 4A21, National Institutes of Health, Bethesda, Maryland 20892, (301) 496–4235, will provide a summary of the meeting and a roster of the committee members.

Dr. Basil M. Rifkind, Deputy Associate Director, Arteriosclerosis, Hypertension and Lipid Metabolism Program, NHLBI, room 4A14, Federal Building, National Institutes of Health, Bethesda, MD 20892, (301) 496–1681, will furnish substantive program information.

(Catalog of Federal Domestic Assistance Program No. 93.837, Heart and Vascular Diseases Research, National Institutes of Health)

Dated: August 28, 1991.

Jeanne N. Ketley,

Acting Committee Management Officer, NIH.

[FR Doc. 91–21336 Filed 9–5–91; 8:45 am]

BILLING CODE 4140–01–M

National Heart, Lung, and Blood Institute; Meeting of Blood Diseases and Resources Advisory Committee

Pursuant to Public Law 92–463, notice is hereby given of the meeting of the Blood Diseases and Resources Advisory Committee, National Heart, Lung, and Blood Institute, October 21–22, 1991, Holiday Inn Bethesda, Montgomery Room, 8120 Wisconsin Avenue, Bethesda, Maryland 20814.

The entire meeting will be open to the public on October 21, from 12 noon to 5 p.m. and on October 22, from 9 a.m. to adjournment, to discuss the status of the Blood Diseases and Resources program needs and opportunities. Attendance by the public will be limited to space available.

Ms. Terry Bellicha, Chief, Communications and Public Information Branch, National Heart, Lung, and Blood Institute, Building 31, room 4A21, National Institutes of Health, Bethesda, Maryland 20892, (301) 496–4236, will provide a summary of the meeting and a roster of the Committee members.

Dr. Fann Harding, Assistant to the Director, Division of Blood Diseases and Resources, National Heart, Lung, and Blood Institute, Federal Building, room 5A08, National Institutes of Health, Bethesda, Maryland 20892, (301) 496–1817, will furnish substantive program information.

Dated: August 28, 1991.

Jeanne N. Ketley,

Acting Committee Management Officer, NIH.

[FR Doc. 91–21337 Filed 9–5–91; 9:45 am]

BILLING CODE 4140–01–M

Public Health Service

Agency Forms Submitted to the Office of Management and Budget for Clearance

Each Friday the Public Health Service (PHS) publishes a list of information collection requests it has submitted to the Office of Management and Budget (OMB) for clearance in compliance with the Paperwork Reduction Act (44 U.S.C. chapter 35). The following requests have been submitted to OMB since the list was last published on August 9, 1991.

(Call PHS Reports Clearance Officer on 202-245-2100 for copies of request.)

1. Health Professions Student Loan (HPSL) and Nursing Student Loan (NSL) Due Diligence Recordkeeping and Reporting Requirements—0915-0094—This information is necessary to document that schools participating in the Health Professions Student Loan (HPSL) and Nursing Student Loan (NSL) programs have exercised sound billing and collection procedures and to ensure that Federal monies are available to recycle for future HPSL and NSL awards. Respondents: Individuals or households, non-profit institutions.

	Number of respondents	Number of responses per respondent	Average burden per response (hours)
Recordkeeping	1,110	1	0.87
Reporting	1,110	131.25	.27

Estimated total annual burden—40,117 hours.

2. Case Control Study of Cancer in Embalmers/Funeral Directors—0925-0344—Mortality studies carried by the National Cancer Institute among funeral directors/embalmers have shown excess risk for leukemia and brain cancer. This case-control study is designed to determine if the excess for cancer is associated with specific etiologic factors in the work environment by interview of next-of-kin and co-workers about occupational history and other possible disease related factors. This submission is for an 18-month extension, no change, of the current approval in order to permit completion of data collection. Respondents: Individuals, businesses, small businesses.

	Number of respondents	Number of responses per respondent	Number of hours per response
Next-of-kin and co-worker questionnaire	2,877	1	0.35
Hospital abstraction	150	1	.5

Estimated annual burden—1,092.

3. IHS Medical Staff Credentials and Privileges File—0917-0009—These forms are used to grant Indian Health Service (IHS) medical staff membership and IHS medical staff privileges to IHS medical staff applicants based on their qualifications, competency and performance. Providers include: physicians, dentists, psychologists, optometrists, podiatrists, audiologists and in some States, certified nurse midwives. Respondents: Individuals, State or local governments, businesses, Federal agencies, non-profit institutions, and small businesses or organizations.

	Number of respondents	Number of responses per respondent	Average burden per response (hours)
Applicants	477	1	1.37
References	1,431	1	1.00
Reappointment	644	1	0.25

Estimated annual burden—2,246 hours.

OMB Desk Officer: Shannah Koss-McCallum.

Written comments and recommendations for the proposed information collections should be sent within 30 days of this notice directly to the OMB Desk Officer designated above at the following address: Human Resources and Housing Branch, New Executive Office Building, room 3002, Washington, DC 20503.

Dated: August 26, 1991.

Sandra K. Mahkorn,

Deputy Assistant Secretary for Health Policy.

[FR Doc. 91-20985 Filed 9-5-91; 8:45 am]

BILLING CODE 4160-17-M

DEPARTMENT OF HOUSING AND URBAN DEVELOPMENT

Office of the Assistant Secretary for Community Planning and Development

[Docket No. N-91-1917; FR-2934-N-42]

Federal Property Suitable as Facilities To Assist the Homeless

AGENCY: Office of the Assistant Secretary for Community Planning and Development, HUD.

ACTION: Notice.

SUMMARY: This notice identifies unutilized, underutilized, excess, and surplus Federal property reviewed by HUD for suitability for possible use to assist the homeless.

ADDRESSES: For further information, contact James N. Forsberg, room 7262, Department of Housing and Urban Development, 451 Seventh Street SW., Washington, DC 20410; telephone (202) 708-4300; TDD number for the hearing- and speech-impaired (202) 708-2565 (these telephone numbers are not toll-free), or call the toll-free title V information line at 1-800-927-7588.

SUPPLEMENTARY INFORMATION: In accordance with 24 CFR 581 and section 501 of the Stewart B. McKinney Homeless Assistance Act (42 U.S.C. 11411), as amended, HUD is publishing this notice to identify Federal buildings and other real property that HUD has reviewed for suitability for use to assist the homeless. The properties were reviewed using information provided to HUD by Federal landholding agencies regarding unutilized and underutilized buildings and real property controlled by such agencies or by GSA regarding its inventory of excess or surplus Federal property. This notice is also published in order to comply with the December 12, 1988 Court Order in *National Coalition for the Homeless* v. *Veterans' Administration*, No. 88-2503-OG (D.D.C.).

Properties reviewed are listed in this notice according to the following categories: Suitable/available, suitable/unavailable, suitable/to be excess, and unsuitable. The properties listed in the three suitable categories have been reviewed by the landholding agencies, and each agency has transmitted to HUD: (1) Its intention to make the property available for use to assist the homeless, (2) its intention to declare the property excess to the agency's needs, or (3) a statement of the reasons that the property cannot be declared excess or made available for use as facilities to assist the homeless.

Properties listed as suitable/available will be available exclusively for homeless use for a period of 60 days from the date of this notice. Homeless assistance providers interested in any such property should send a written expression of interest to HHS, addressed to Judy Breitman, Division of Health Facilities Planning, U.S. Public Health Service, HHS, room 17A-10, 5600 Fishers Lane, Rockville, MD 20857; (301) 443-2265. (This is not a toll-free number.) HHS will mail to the interested provider an application packet, which will include instructions for completing the application. In order to maximize the opportunity to utilize a suitable property, providers should submit their written expressions of interest as soon as possible. For complete details concerning the processing of applications, the reader is encouraged to refer to the interim rule governing this program, 56 FR 23789 (May 24, 1991).

For properties listed as suitable/to be excess, that property may, if subsequently accepted as excess by GSA, be made available for use by the homeless in accordance with applicable

law, subject to screening for other Federal use. At the appropriate time, HUD will publish the property in a Notice showing it as either suitable/available or suitable/unavailable.

For properties listed as suitable/unavailable, the landholding agency has decided that the property cannot be declared excess or made available for use to assist the homeless, and the property will not be available.

Properties listed as unsuitable will not be made available for any other purpose for 20 days from the date of this notice. Homeless assistance providers interested in a review by HUD of the determination of unsuitability should call the toll free information line at 1-800-927-7588 for detailed instructions or write a letter to James N. Forsberg at the address listed at the beginning of this notice. Included in the request for review should be the property address (including zip code), the date of publication in the **Federal Register**, the landholding agency, and the property number.

For more information regarding particular properties identified in this notice (*i.e.*, acreage, floor plan, existing sanitary facilities, exact street address), providers should contact the appropriate landholding agencies at the following addresses: U.S. Air Force: Bob Menke, USAF, Bolling AFB, SAF-MIIR, Washington, DC 20332-5000; (202) 767-6235; Corps of Engineers: Bob Swieconek, Army Corps of Engineers, Civilian Facilities, rm. 5138, 20 Massachusetts Avenue NW., Washington, DC 20314-1000; (202) 272-1750; GSA: Ronald Rice, Federal Property Resources Services, GSA, 18th and F Streets NW., Washington, DC 20405; (202) 501-0067; Dept. of Interior: Lola D. Knight, Property Management Specialist, Dept. of Interior, 1849 C Street NW., Mailstop 5512-MIB, Washington, DC 20240; (202) 208-4080. (These are not toll-free numbers.)

Dated: August 30, 1991.

Paul Roitman Bardack,

Deputy Assistant Secretary for Economic Development.

TITLE V, FEDERAL SURPLUS PROPERTY PROGRAM FEDERAL REGISTER REPORT FOR 09/06/91

Suitable/Available Properties

Buildings (by State)

Nebraska

Concession Stand
Former Niobrara State Park Bldg.
Lewis and Clark Lake, NE, Co: Knox NE 68760-
Location: North side of Hwy 12, one mile west of the Village of Niobrara
Landholding Agency: COE
Property Number: 319120004
Status: Unutilized
Comment: 756 sq. ft., 1 story wood frame, off-site removal only, needs rahab, possible water damage

Barracks Bldg.
Former Niobrara State Park Bldg.
Lewis and Clark Lake, NE, Co: Knox NE 68760-
Location: North side of Hwy. 12, one mile west of the Village of Niobrara
Landholding Agency: COE
Property Number: 319120005
Status: Unutilized
Comment: 1,080 sq. ft., 1 story wood frame, needs rehab, possible water damage, off-site removal only

Dining Hall
Former Niobrara State Park Bldg.
Lewis and Clark Lake, NE, Co: Knox NE 68760-
Landholding Agency: COE
Property Number: 319120006
Status: Unutilized
Comment: 1,700 sq. ft., 1 story wood frame, needs rehab, possible water damage, off-site removal only

Ohio

Barker Historic House
Willow Island Locks and Dam
Newport, Co: Washington OH 45768-9801
Location: Located at lock site, downstream of lock and dam structure
Landholding Agency: COE
Property Number: 319120018
Status: Unutilized
Comment: 1,600 sq. ft. bldg. with ½ acre of land, 2 story brick frame, needs rehab, on Natl Register of Historic Places, no utilities, secured area with alternate access.

Land (by State)

Virginia

St. Helena Annex (former portion)
Treadwell and South Main Streets
Norfolk, Co: Norfolk VA 23523-
Landholding Agency: GSA
Property Number: 549120005
Status: Excess
Comment: 4.36 acres, most recent use—paved parking lot GSA Number: 4-GR(2)-VA525AA

Suitable/Unavailable Properties

Buildings (by State)

Pennsylvania

Bldg.—Cowanesque Lake
Tioga, Co: Tioga PA 16946-
Location: Located on north side of Bliss Road across from Cowansesque Dam Office
Landholding Agency: COE
Property Number: 319120003
Status: Excess Comment: 2,640 sq. ft., 1 story wood frame, most recent use—storage, off-site removal only

Land (by State)

Indiana

Portion Cannelton Locks & Dam
3 miles east of Cannelton, Indiana on Indiana State Highway 66
Cannelton, Co: Perry IN 47520-
Landholding Agency: GSA
Property Number: 549,30006
Status: Excess
Comment: 128.39 acres, very steep, irregularly shaped parcel, 200 sq. ft. restroom facility on site.
GSA Number: 2-D-IN-569-B

Unsuitable Properties

Buildings (by State)

Alabama

Bldg. 932
932 3rd St. & Ave. D, West
Montgomery Co: Montgomery AL 36112-
Landholding Agency: Air Force
Property Number: 189130335
Status: Unutilized
Reason: Secured Area

Bldg. 8
8 Maxwell Blvd., East Montgomery, Co: Montgomery AL 36112-
Landholding Agency: Air Force
Property Number: 189130336
Status: Unutilized
Reason: Secured Area

Bldg. 712
Avenue "E"
Gunter Air Force Base
Montgomery, Co: Montgomery AL 36114-5000
Landholding Agency: Air Force
Property Number: 189130349
Status: Unutilized
Reason: Secured Area

Bldg. 1004
Reserves Forces Training Facility
Maxwell Air Force Base
Montgomery, Co: Montgomery AL 36112-
Location: 1004 Maxwell Blvd. & Kelly Street
Landholding Agency: Air Force
Property Number: 18913069
Status: Unutilized
Reason: Secured Area Within airport runway clear zone

12 maintenance and storage buildings
Maxwell Air Force Base
Montgomery Co: Montgomery AL 36112-
Landholding Agency: Air Force
Property Numbers: 189130370-189130381
Status: Unutilized
Reason: Secured Area

California

11 buildings
Vandenberg Air Force Base
Vandenberg AFB, Co: Santa Barbara CA 93437-
Location: Hwy 1, Hwy 246, Coast Road, PT Sal Rd., Miguelito CYN
Landholding Agency: Air Force
Property Numbers: 189130350-189130360
Status: Unutilized
Reason: Secured Area Within 2,000 ft. of flammable or explosive material

Bldg. 5015
Vandenberg Air Force Base
Vandenberg AFB, Co: Santa Barbara CA 93437-
Location: Hwy 1, Hwy 246, Coast Road, PT Sal Rd., Miguelito CYN
Landholding Agency: Air Force
Property Number: 189130361
Status: Excess
Reason: Secured Area Within 2,000 ft. of flammable or explosive material Within airport runway clear zone

Bldg. 8006
Vandenberg Air Force Base
Vandenberg AFB, Co: Santa Barbara CA 93437-
Location: Hwy 1, Hwy 246, Coast Road, PT Sal Rd., Miguelito CYN
Landholding Agency: Air Force
Property Number: 189130362
Status: Excess
Reason: Secured Area

Florida

Bldg. 902
Tyndall Air Force Base
Panama City, Co: Bay FL 32403-5000
Landholding Agency: Air Force
Property Number: 189130348
Status: Underutilized
Reason: Secured Area

6 buildings
Patrick Air Force Base
Cocoa Beach, Co: Brevard FL 32925-
Location: A Street
Landholding Agency: Air Force
Property Numbers: 189130363-189130368
Status: Excess
Reason: Secured Area Within airport runway clear zone

Illinois

11 buildings
Scott Air Force Base
Scott AFB, Co: St. Clair IL 62225-5001
Landholding Agency: Air Force
Property Numbers: 189130337-189130347
Status: Unutilized
Reason: Secured Area

Indiana

Bldg. 707
Parallel to NE-SW runway & alternate runway
Grissom AFB, Co: Miami IN 46971-
Landholding Agency: Air Force
Property Number: 189130334
Status: Unutilized
Reason: Within airport runway clear zone Secured Area

New Mexico

Bldg. 831
833 CSG/DEER
Holloman AFB, Co: Otero NM 88330-
Landholding Agency: Air Force
Property Number: 189130333
Status: Unutilized
Reason: Secured Area

South Dakota

157 buildings
Renel Heights
Ellsworth Air Force Base
Ellsworth AFB, Co: Pennington SD 57706-
Landholding Agency: Air Force
Property Numbers: 189130001, 189130003-189130157, 189130382
Status: Unutilized
Reason: Other
Comment: Extensive deterioration

175 buildings—Skyway
Ellsworth AFB, Co: Pennington SD 57706-
Landholding Agency: Air Force
Property Numbers: 189130158-189130331, 189130383
Status: Unutilized
Reason: Other
Comment: Extensive deterioration

Bldg. 8904
Maintenance Work Center Unit
204 Harrison Terrace
Ellsworth AFB, Co: Pennington SD 57706-
Landholding Agency: Air Force
Property Number: 189130332
Status: Unutilized
Reason: Other
Comment: Extensive deterioration

Washington

Bldg. L-103, L-234
Mount Rainier National Park
Longmire Maintenance Complex
Longmire, Co: Pierce WA 98397-
Landholding Agency: Interior
Property Numbers: 619130007-619130008
Status: Excess
Reason: Other
Comment: Extensive deterioration

Suitable/To Be Excessed Properties

Suitable/To Be Excessed Properties

Land (by State)

Texas

Tract F-516 O.C. Fisher Lake
Parallel with Grape Creek Road
San Angelo, Co: Tom Green TX 76902-3085
Landholding Agency: COE
Property Number: 319120002
Status: Unutilized
Comment: 2.13 acres, potential limited utilities.

[FR Doc. 91-21215 Filed 9-5-91; 8:45 am]

BILLING CODE 4210-29-M

DEPARTMENT OF THE INTERIOR

Bureau of Land Management

[OR-013-6350-13; G1-342]

Grazing Advisory Board Meeting

AGENCY: Bureau of Land Management, Interior.

ACTION: Notice of a meeting of the Lakeview District Grazing Advisory Board.

SUMMARY: The meeting is scheduled for October 22, 1991, beginning at 10:00 a.m. in the Lakeview District conference room, located at 1000 South Ninth Street, Lakeview, Oregon. The purpose of the meeting is to discuss the range, wildlife, and watershed improvement projects for Fiscal Years 1992 and 1993. Vegetation management initiatives as well as scheduled allotment evaluations and allotment management plans will be addressed. The public is welcome.

DATE: October 22, 1991, 10 a.m.

FOR FURTHER INFORMATION CONTACT: Judy Nelson or Lisa Swinney, Lakeview District Office, P.O. Box 151/1000 South Ninth Street, Lakeview, OR 97630 (Telephone 503-947-2177).

Terry H. Sodorff,

Assistant District Manager, Lakeview District Office.

[FR Doc. 91-21380 Filed 9-5-91; 8:45 am]

BILLING CODE 4310-33-M

[MT-020-01-4320-02]

Montana; meeting

AGENCY: Bureau of Land Management, Miles City District Office, Interior.

ACTION: Notice of meeting.

SUMMARY: In accordance with Public Law 92-463, a meeting of the Miles City District Advisory Council will meet Tuesday, September 24, 1991 at 8 a.m. The meeting will be held in the District Office Conference room on Garryowen Road. The Council will consider resolutions to be presented. Specific agenda items to be discussed are budget and land exchanges.

The new Council members will gather September 23, 1991 at 1 p.m. in the District Conference Room for an orientation.

The meeting on September 24 is open to the public. The public may make oral statements before the Council or file written statements for the Council to consider. Depending upon the number of persons wishing to make an oral statement, a per person time limit may be established. Summary minutes of the meeting will be maintained in the Bureau of Land Management District Office and will be available for public inspection and reproduction during regular business hours within 30 days following the meeting.

FOR FURTHER INFORMATION CONTACT: District Manager, Miles City District, Bureau of Land Management, P.O. Box 940, Miles City, Montana 59301.

Sandra E. Sacher,

District Manager.

[FR Doc. 91-21381 Filed 9-5-91; 8:45 am]

BILLING CODE 4310-DN-M

[CA-940-4212-11; CALA 0164252]

Order Providing for Opening of Land; California

AGENCY: Bureau of Land Management, Interior.

ACTION: Opening order.

SUMMARY: On March 12, 1963, the Bureau of Land Management issued patent 1231224 to the County of Riverside, California, pursuant to the Recreation and Public Purposes Act of June 14, 1926 (43 U.S.C. 869, et seq.). Title to the patented land has reverted to the United States, and the land has regained its public land status. This action will open 160 acres to the operation of the public land laws and to mining. The land has been and will remain open to mineral leasing.

EFFECTIVE DATE: October 7, 1991.

FOR FURTHER INFORMATION CONTACT: Viola Andrade, BLM California State Office, room E-2845, Federal Office Building, 2800 Cottage Way, Sacramento, California 95825-1889, 916-978-4820.

1. On July 1, 1991, the Bureau of Land Management issued a decision of divestiture of County of Riverside's title and revestiture of title in the United States because of noncompliance with the terms and conditions of the patent. No appeal was filed and the decision became final as to the following described land:

San Bernardino Meridian

T. 2 S., R. 5 E.,
Sec. 34, SE¼.

The area described contains 160 acres in Riverside County.

2. At 10 a.m. on October 7, 1991, the lands will be opened to the operation of the public land laws generally, subject to valid existing rights, the provisions of existing withdrawals, and the requirements of applicable law. All valid applications received at or prior to 10 a.m. on October 7, 1991, shall be considered as simultaneously filed at that time. Those received thereafter shall be considered in the order of filing.

3. At 10 a.m. on October 7, 1991, the lands will be opened to location and entry under the United States mining laws. Appropriation of any of the lands described in this order under the general mining laws prior to the date and time of restoration is unauthorized. Any such attempted appropriation, including attempted adverse possession under 30 U.S.C. 38, shall vest no rights against the United States. Acts required to establish a location and to initiate a right of possession are governed by State law where not in conflict with Federal law. The Bureau of Land Management will not intervene in disputes between rival locators over possessory rights since Congress has provided for such determinations in local courts.

Dated: August 30, 1991.

Nancy J. Alex,

Chief, Lands Section.

[FR Doc. 91-21382 Filed 9-5-91; 8:45 am]

BILLING CODE 4310-40-M

[MT-930-4214-11; MTM 924, MTM 27963, and MTM 30912]

Order Providing for Opening of Reserved Public Lands and National Forest System Lands; Montana

AGENCY: Bureau of Land Management, Interior.

ACTION: Notice.

SUMMARY: This notice terminates the temporary segregative effect of three proposed withdrawals on 980,251.85 acres of reserved public lands and National Forest System lands included in Forest Service and Fish and Wildlife Service applications for withdrawal.

EFFECTIVE DATE: October 20, 1991.

FOR FURTHER INFORMATION CONTACT: James Binando, BLM Montana State Office, P.O. Box 36800, Billings, Montana 59107, 406-255-2935.

SUPPLEMENTARY INFORMATION: Pursuant to the regulations contained in 43 CFR 2310.2-1(e), the lands described in the withdrawal applications listed below will be relieved of their temporary segregative effect at 9 a.m. on October 20, 1991:

1. MTM 924—Canyon Creek and Trapper Creek Charcoal Kilns (published December 1, 1966, 31 FR 15098).

2. MTM 27963—Cottonwood Creek Research Natural Area (published April 18, 1974, 39 FR 13902).

3. MTM 30912—Charles M. Russell National Wildlife Refuge (published March 11, 1975, 40 FR 11365).

4. The withdrawal applications will continue to be processed unless they are canceled or denied.

Dated: August 28, 1991.

John E. Moorhouse,

Acting Deputy State Director, Division of Lands and Renewable Resources.

[FR Doc. 91-21383 Filed 9-5-91; 8:45 am]

BILLING CODE 4310-DN-M

[AZ-040-01-4410-08]

Availability of the Final Safford District Resource Management Plan and Environmental Impact Statement; Safford District, AZ

August 27, 1991.

AGENCY: Bureau of Land Management, Interior.

ACTION: Notice of availability.

SUMMARY: Pursuant to section 102(2)(C) of the National Environmental Policy Act of 1969, the Bureau of Land Management has prepared a Final Environmental Impact Statement for a proposed Safford District Resource Management Plan. The Resource Management Plan identifies the Bureau of Land Management's proposed management for about 1.4 million acres of public land in southeastern Arizona. Four alternatives were evaluated for addressing four major issues: access, Areas of Critical Environmental Concern, off-highway vehicle use and riparian areas.

The Resource Management Plan/Draft Environmental Impact Statement was released January 5, 1990. After an extension was provided to accommodate comments on Areas of Critical Environmental Concern, the comment period concluded June 5, 1990. During the comment period, open houses were held in Safford, Bisbee, Tucson and Winkelman, Arizona.

Among the management actions prescribed in the Preferred Alternative are the designations of thirteen (13) Areas of Critical Environmental Concern encompassing 31,578 acres. These areas include: (1) Gila Box—2,411 acres; (2) Turkey Creek—2,326 acres; (3) Table Mountain—1,220 acres; (4) Desert Grasslands—530 acres; (5) Swamp Springs/Hot Springs—10,838 acres; (6) Bear Springs Badlands—2,927 acres; (7) Guadalupe Canyon—2,159 acres; (8) Bowie Mountain—4,190 acres; (9) Coronado Mountain—120 acres; (10) Dos Cabezas Peaks—25 acres; (11) Eagle Creek Bat Cave—40 acres; (12) Willcox Playa—2,475 acres; and (13) 111 Ranch—2,688 acres. Major resource use limitations vary in each Area of Critical Environmental Concern but include off-highway vehicle limitations, mineral restrictions, woodcutting restrictions, rights-of-way limitations, livestock removals or restrictions and prohibition of vegetative sales.

ADDRESSES: Bureau of Land Management, Safford District Office, 425 E. 4th Street, Safford, Arizona 85546.

FOR FURTHER INFORMATION CONTACT: Contact Cindy Alvarez, Environmental Coordinator, at the Safford District Office, 425 E. 4th Street, Safford, Arizona 85546 or by telephone (602) 428-4040.

SUPPLEMENTARY INFORMATION: A limited number of copies of the Final Resource Management Plan/Environmental Impact Statement are available upon request to the Safford District Manager,

Bureau of Land Management, 425 E. 4th Street, Safford, Arizona 85546. There are also copies for review at that address.

Theodore Bingham,

Acting State Director.

[FR Doc. 91-21384 Filed 9-5-91; 8:45 am]

BILLING CODE 4310-32-M

[CA-940-4214-10; CACA 5200]

Cancellation of Proposed Withdrawal; California

AGENCY: Bureau of Land Management, Interior.

ACTION: Notice.

SUMMARY: The Department of Army, Sacramento District Corps of Engineers, has withdrawn their application to withdraw 15 acres of public land to protect a unique species of harvestmen (a phalangid of the arachnid class).

EFFECTIVE DATE: September 6, 1991.

FOR FURTHER INFORMATION CONTACT: Viola Andrade, BLM California State Office, 2800 Cottage Way, Room E-2845, Sacramento, California 95825-1889, 916-978-4820.

SUPPLEMENTARY INFORMATION: A Notice of Proposed Withdrawal and Reservation of Lands was published in the **Federal Register**, 43 FR 32881, July 28, 1978. A Notice of Termination of Segregation and Opening of Lands was published in the **Federal Register**, 53 FR 31400, August 18, 1988. The application is canceled in its entirety for the following described land:

Mount Diablo Meridian

T. 3 N., R. 14 E.,
Sec. 35, SE¼NE¼SE¼ and N½NE¼SE¼ SE¼.

The area described contains 15 acres in Tuolumne County.

Dated: August 30, 1991.

Nancy J. Alex,

Chief, Lands Section.

[FR Doc. 91-21385 Filed 9-5-91; 8:45 am]

BILLING CODE 4310-40-M

[OR-943-4214-11; GP-334; ORE-013914]

Proposed Continuation of Withdrawal; Oregon

AGENCY: Bureau of Land Management, Interior.

ACTION: Notice.

SUMMARY: The U.S. Department of Agriculture, Forest Service, proposes that a portion of the land withdrawal for an administrative site and recreation areas continue for an additional 20 years and requests that the lands involved remain closed to mining.

FOR FURTHER INFORMATION CONTACT: Linda Sullivan, BLM, Oregon State Office, P.O. Box 2965, Portland, Oregon 97208, 503-280-7171.

The Forest Service proposes that the existing land withdrawal made by Public Land Order No. 3379, be continued for a period of 20 years pursuant to Section 204 of the Federal Land Policy and Management Act of 1976, 90 Stat. 2751, 43 U.S.C. 1714. The following identified lands and projects are involved:

Malheur National Forest

Crow Flat Administrative Site, 20 acres in sec. 13, T. 20, S., R. 31 E., W.M., Harney County, approximately 18 miles north of Burns.

Idlewild Campground, 20 acres in sec. 27, T. 20 S., R. 31 E., W.M., Harney County, approximately 16 miles north of Burns.

Rock Springs Campground, 10 acres in sec. 23, T. 18 S., R. 32 E., W.M., Grant County, approximately 30 miles north of Burns.

The purpose of the withdrawal is to protect the administrative sites and campgrounds. The withdrawal currently segregation the lands from operation of the mining laws, but not the public land laws generally and the mineral leasing laws. The Forest Service requests no changes in the purpose or segregative effect of the withdrawal.

For a period of 90 days from the date of publication of this notice, all persons who wish to submit comments, suggestions or objections in connection with the proposed withdrawal continuation may present their views in writing to the undersigned officer at the address specified above.

The authorized office of the Bureau of Land Management will undertake such investigations as are necessary to determine the existing and potential demand for the lands and their resources. A report will also be prepared for consideration by the Secretary of the Interior, the President and Congress, who will determine whether or not the withdrawal will be continued and if so, for how long. The final determination of the continuation of the withdrawal will be published in the **Federal Register**. The existing withdrawal will continue until such final determination is made.

Dated: August 20, 1991.

Robert E. Mollohan,

Chief, Branch of Lands and Minerals Operations.

[FR Doc. 91-21386 Filed 9-5-91; 8:45 am]

BILLING CODE 4310-33-M

National Park Service

Availability of Plan of Operations and Environmental Assessment for Plugging and Abandonment of the Ingerton "A" No. 3 Gas Well; Phillips Petroleum Co., Lake Meredith National Recreation Area, Hutchinson County, Texas

Notice is hereby given in accordance with § 9.52(b) of title 36 of the Code of Federal Regulations that the National Park Service has received from Phillips Petroleum Company a Plan of Operations for Plugging and Abandonment of the Ingerton "A" No. 3 Gas Well within Lake Meredith National Recreation Area, Hutchinson County, Texas.

The Plan of Operations and Environmental Assessment are available for public review and comment for a period of 30 days from the publication date of this notice in the Office of the Superintendent, Lake Meredith National Recreation Area, 419 East Broadway, Fritch, Texas; and the Southwest Regional Office, National Park Service, 1220 South St. Francis Drive, room 211, Santa Fe, New Mexico. Copies are available from the Southwest Regional Office, Post Office Box 728, Santa Fe, New Mexico 87504-0728, and will be sent upon request.

Dated: August 29, 1991.

Richard Marks,

Acting Regional Director, Southwest Region.

[FR Doc. 91-21301 Filed 9-5-91; 8:45 am]

BILLING CODE 4310-70-M

Meeting: Committee for the Preservation of the White House

In compliance with the Federal Advisory Committee Act, notice is hereby given of a meeting of the Committee for the Preservation of the White House. The meeting will be held at the Old Executive Office Building, Washington, DC at 2 p.m., Friday, September 20, 1991. It is expected that the agenda will include discussion of policies, goals and refurbishing plans. The meeting will be open, but subject to appointment and security clearance requirements, including clearance information by September 13, 1991.

Inquires may be made by calling the Committee for the Preservation of the White House between 9 a.m. and 4 p.m., weekdays at (202) 619-6344. Written comments may be sent to the Executive Secretary, Committee for the Preservation of the White House, 1100 Ohio Drive SW., Washington, DC, 20242.

Dated: August 29, 1991.

James I. McDaniel,

Executive Secretary, Committee for the Preservation of the White House.

[FR Doc. 91-21322 Filed 9-5-91; 8:45 am]

BILLING CODE 4310-70-M

INTERNATIONAL TRADE COMMISSION

[Investigation No. 731-TA-485 (Final)]

Certain Gene Amplification Thermal Cyclers and Subassemblies Thereof From the United Kingdom

Determination

On the basis of the record [1] developed in the subject investigation, the Commission determines, pursuant to section 735(b) of the Tariff Act of 1930 (19 U.S.C. section 1673d(b)) (the act), that an industry in the United States is not materially injured or threatened with material injury, and the establishment of an industry in the United States is not materially retarded by reason of imports from the United Kingdom of certain gene amplification thermal cyclers and subassemblies thereof,[2] provided for in subheadings 8419.89.50 and 8419.90.90, respectively, of the Harmonized Tariff Schedule of the United States, that have been found by the Department of Commerce to be sold in the United States as less than fair value (LTFV).

Background

The Commission instituted this investigation effective April 26, 1991, following a preliminary determination by the Department of Commerce that imports of certain gene amplification thermal cyclers and subassemblies thereof from the United Kingdom were being sold at LTFV within the meaning of section 733(b) of the act (19 U.S.C. section 1673b(b)). Notice of the institution of the Commission's investigation and of a public hearing to be held in connection therewith was given by posting copies of the notice in the Office of the Secretary, U.S. International Trade Commission, Washington, DC, and by publishing the notice in the **Federal Register** of May 15, 1991 (56 FR 22446). The hearing was held in Washington, DC, on July 3, 1991, and all persons who requested the opportunity were permitted to appear in person or by counsel.

The Commission transmitted its determination in this investigation to the Secretary of Commerce on August 28, 1991. The views of the Commission are contained in USITC Publication 2412 (August 1991), entitled "Certain Gene Amplification Thermal Cyclers and Subassemblies Thereof from the United Kingdom: Determination of the Commission in Investigation No. 731-TA-485 (Final) Under the Tariff Act of 1930, Together With the Information Obtained in the Investigation."

Issued: August 30, 1991.

By Order of the Commission

Kenneth R. Mason,

Secretary.

[FR Doc. 91-21348 Filed 9-5-91; 8:45 am]

BILLING CODE 7020-02-M

[1] The record is defined in sec. 207.2(f) of the Commission's Rules of Practice and Procedure (19 CFR 207.2(f)).

[2] Certain gene amplification thermal cyclers consist of Peltier-effect *in vitro* gene amplification thermal cyclers, whether assembled or unassembled, and the subassemblies thereof specified below. Gene amplification thermal cyclers are microprocessor-based reaction controllers that regulate temperatures of biologic reagents through a programmed and highly controlled thermal regime. They are used in biotechnology applications, including a biological protocol called *in vitro* gene amplification, as well as in several related sequencing and radionucleotide labeling reactions. Peltier-effect machines use one or more thermoelectric modules for cooling of the biological sample, and the thermoelectric modules and/or electric resistive heaters for heating the biological samples.

Gene amplification thermal cyclers incorporate a metal sample block, one or more thermoelectric modules, one or more electronic thermal sensors, a heat exchanger, power supply circuitry, microprocessor-based logic circuitry, software, and a housing or enclosure. The following subassemblies are included in the scope of the investigation when they are manufactured according to specifications and operational requirements to dedicate them for use only in a gene amplification thermal cycler as defined in the preceding paragraph: (1) The sample block/thermoelectric module(s)/temperature sensor(s)/heat exchanger subassembly, which consists of the sample block, one or more thermoelectric modules, one or more electronic thermal sensors, and a heat exchanger, and which can include an electric resistive heater; (2) the housing or enclosure, whether finished or unfinished; (3) the membrane keypad used to program and control the machine; and (4) the software needed for operation.

DEPARTMENT OF JUSTICE

[AAG/A Order No. 50-91]

Privacy Act of 1974 System of Records Modification

Pursuant to the Privacy Act, 5 U.S.C. 552a, the Department of Justice, United States Marshals Service, proposes to modify the Prisoner Transportation System, JUSTICE/USM-003, last published in the **Federal Register** on October 13, 1989 (54 FR 42102). This system notice is amended to redescribe the records of this system as those relating only to the inter-district movement of prisoners; to improve and clarify certain routine use language (italicized for public convenience); to remove an unnecessary routine use; to make other minor changes which update and better describe the system; and to exempt the system from certain Privacy Act provisions. A proposal to exempt the system from subsections (c) (3) and (4), (d), (e) (1), (2), (5) and (g) of the Privacy Act pursuant to 5 U.S.C. 552a(j)(2) may be found in the Proposed Rules section of today's **Federal Register**.

Title 5 of the U.S.C. 552a(3) (4) and (11) provide that the public be given a 30-day period in which to comment on new routine uses; the Office of Management and Budget (OMB), which has oversight responsibilities under the Act, requires a 60-day period in which to review the system changes.

Therefore, please submit any comments by (30 days from the publication date of this notice). The public, OMB, and the Congress are invited to submit written comments to Patricia E. Neely, Staff Assistant, Systems Policy Staff, Justice Management Division, Department of Justice, Washington, DC 20530 (room 5031, CAB Building).

In accordance with 5 U.S.C. 552a(r), the Department has provided a report on this system to OMB and the Congress.

The system description is printed below.

Dated: August 26, 1991.

Harry H. Flickinger,

Assistant Attorney General for Administration.

JUSTICE/USM-003

SYSTEM NAME:

U.S. Marshals Service Prisoner Transportation System.

SYSTEM LOCATION:

Prisoner Transportation Division, U.S. Marshals Service (USMS), Department of Justice; *911 Walnut Street,* Kansas City, Missouri 64106.

CATEGORIES OF INDIVIDUALS COVERED BY THE SYSTEM:

Prisoners taken into custody of and transported by the U.S. Marshal.

CATEGORIES OF RECORDS IN THE SYSTEM:

Any and all information necessary to schedule and effect the safe and efficient movement of prisoners for court appearances and service of sentence. Information will include: (1) Requests for prisoner movement generated by the U.S. Marshal having custody of the prisoner. These requests include identifying information for each prisoner

taken into U.S. Marshal custody; the offense(s) for which the prisoner is charged and the disposition of the charge(s); the process code defining the purpose of the prisoner movement (*e.g.*, judgment and commitment, warrant of removal); names and information on other prisoners scheduled for movement on the trip, including sensitive security data, *e.g.*, cautions to be considered in scheduling the prisoner for movement and observed during the prisoner movement, such as informant or protected witness status and location, or any special medical requirements; jail location where the prisoner is housed; the final destination for the prisoner; the deadline date for the prisoner movement; and the security classification (and any information relevant thereto) of the prisoner movement; (2) trip authorization messages which include the trip itinerary, cost data, mode of travel, names and grades of USMS personnel assigned to the trip, names of prisoners transported, and access codes, data entry codes and message routing symbols used in law enforcement communications systems to schedule and effect prisoner movements; (3) trip completion reports; (4) notifications to the U.S. Marshal regarding out-of-district prisoners to be housed overnight within his or her district during transit; and (5) reports of incidents, accidents, or illnesses during transit.

AUTHORITY FOR MAINTENANCE OF THE SYSTEM:

18 U.S.C. 3193, 3621, 3623, 4002, 4008, 5001; 28 U.S.C. 509, 510, 568, 569, 573; 5 U.S.C. 301; 44 U.S.C. 3101; and 28 CFR 0.111(j).

PURPOSE:

To manage the overall prisoner transportation program by coordinating and effecting the movement of prisoners in custody of the USMS for necessary court appearances or service of sentence.

ROUTINE USES OF RECORDS MAINTAINED IN THE SYSTEM, INCLUDING CATEGORIES OF USERS AND THE PURPOSES OF SUCH USES:

Relevant records or information may be disclosed as a routine use (a) to other Federal, State and local law enforcement officials to schedule and effect safe and efficient prisoner movements, e.g., to make appropriate travel arrangements, to arrange for overnight housing spaces for prisoners during transit, to coordinate medical and security requirements for prisoner movements, and to otherwise ensure the safe delivery of prisoners at the designated institution or U.S. Marshal's office.

(*b*) to the news media and the public pursuant to 28 CFR 50.2 unless it is determined that release of the specific information in the context of a particular case would constitute an unwarranted invasion of personal privacy.

(*c*) to a Member of Congress or staff acting upon the Member's behalf where the Member or staff requests the information on behalf of and at the request of the individual who is the subject of the record.

(*d*) to the National Archives and Records Administration (NARA) and to the General Services Administration in records management inspections conducted under the authority of 44 U.S.C. 2904 and 2906.

POLICIES AND PRACTICES FOR STORING, RETRIEVING, ACCESSING, RETAINING, AND DISPOSING OF RECORDS IN THE SYSTEM:

STORAGE:

Information is stored in standard file cabinets. Duplicate copies of paper records are stored on magnetic discs.

RETRIEVABILITY:

Information is retrieved by name of prisoner and number.

SAFEGUARDS:

Access restricted to Operations Personnel. File cabinets are locked during non-duty hours. Access to automated records is protected by user identification numbers and passwords.

RETENTION AND DISPOSAL:

The USMS is reviewing a proposed disposition schedule for these records. Upon approval by the USMS Records Management Officer and NARA, this section of the notice will be revised to identify the approved schedule.

SYSTEM MANAGER(S) AND ADDRESS:

Chief, Prisoner Transportation Division, United States Marshals Service U.S. Department of Justice, 911 Walnut Street, Kansas City, Missouri 64106.

NOTIFICATION PROCEDURE:

Same as System Manager.

RECORD ACCESS PROCEDURE:

A request for access to a record from this system shall be made in writing, with the envelope and the letter clearly marked "Privacy Access Request." It should clearly indicate name of requester, the nature of the record sought and approximate dates covered by the record. The requestor shall also provide the required verification of identity (28 CFR 16.41(d)) and provide a return address for transmitting the information. Access requests will be directed to the System Manager listed above, Attention: FOI/PA Officer.

CONTESTING RECORD PROCEDURES:

Individuals desiring to contest or amend information maintained in the system should direct their request to the System Manager listed above, stating clearly and concisely what information is being contested, the reasons for contesting it, and the proposed amendment to the information sought.

RECORD SOURCE CATEGORIES:

Information contained in this system is obtained from each prisoner taken into custody by the U.S. Marshal, court records, physicians, law enforcement agencies, and informants.

SYSTEMS EXEMPTED FROM CERTAIN PROVISIONS OF THE ACT:

The Attorney General has exempted this system from subsection (c) (3) and (4), (d), (e)(1), (2), (5) and (g) of the Privacy Act pursuant to 5 U.S.C. 552a(j)(2). Rules have been promulgated in accordance with the requirements of 5 U.S.C. 553 (b), (c) and (e) and have been published in the **Federal Register**.

[FR Doc. 91–21388 Filed 9–5–91; 8:45 am]

BILLING CODE 4410–01–M

DEPARTMENT OF LABOR

Office of the Secretary

Agency Recordkeeping/Reporting Requirements Under Review by the Office of Management and Budget (OMB)

Background

The Department of Labor, in carrying out its responsibilities under the Paperwork Reduction Act (44 U.S.C. chapter 35), considers comments on the reporting/recordkeeping requirements that will affect the public.

List of Recordkeeping/Reporting Requirements Under Review

As necessary, the Department of Labor will publish a list of the Agency recordkeeping/reporting requirements under review by the Office of Management and Budget (OMB) since the last list was published. The list will have all entries grouped into new collections, revisions, extensions, or reinstatements. The Departmental Clearance Officer will, upon request, be able to advise members of the public of the nature of the particular submission they are interested in.

Each entry may contain the following information:

The Agency of the Department issuing this recordkeeping/reporting requirement.
The title of the recordkeeping/reporting requirement.
The OMB and/or Agency identification numbers, if applicable.
How often the recordkeeping/reporting requirement is needed.
Whether small businesses or organizations are affected.
An estimate of the total number of hours needed to comply with the recordkeeping/reporting requirements and the average hours per respondent.
The number of forms in the request for approval, if applicable.
An abstract describing the need for and uses of the information collection.

Comments and Questions

Copies of the recordkeeping/reporting requirements may be obtained by calling the Departmental Clearance Officer, Kenneth A. Mills ((202) 523–5095). Comments and questions about the items on this list should be directed to Mr. Mills, Office of Information Resources Management Policy, U.S. Department of Labor, 200 Constitution Avenue, NW., room N–1301, Washington, DC 20210. Comments should also be sent to the Office of Information and Regulatory Affairs, Attn: OMB Desk Officer for (BLS/DM/ESA/ETA/OLMS/MSHA/OSHA/PWBA/VETS), Office of Management and Budget, room 3001, Washington, DC 20503 ((202) 395–6880).

Any member of the public who wants to comment on recordkeeping/reporting requirements which have been submitted to OMB should advise Mr. Mills of this intent at the earliest possible date.

New

Employment and Training Administration.
Survey of Colorado UI Claimants.
One-time.
Individuals or households.
900 respondents; 150 total hours; 10 minutes per response; no forms.

Proposed survey will contribute to an evaluation of Colorado's transition to telephone processing of UI Claims. It will be used to gather information from recent UI claimants in Colorado about quality and timeliness of service provided by the State UI agency using the new procedure.

SURVEY OF CURRENT AND POTENTIAL USERS OF OCCUPATIONAL INFORMATION

Form No.	Affected public	Respondents	Frequency	Average time per response
Personal/telephone survey	State/local governments/businesses or other for profit, Federal agencies, nonprofit institutions; small businesses or organizations.	61	One-time	55 minutes.
Mail questionnaire	....do	4,896	One-time	30 minutes.
Identication of workers	State/local government agency directors	500	One-time	2½ hours.
3,754 total hours.				

Forms requesting information from various state and local agencies are necessary to collect data on the needs of occupational information users to provide the U.S. Employment Service, Employment and Training Administration with information that can be used as an effective tool in the Secretary of Labor's Workforce Quality agenda.

Revision

Bureau of Labor Statistics,
Consumer Price Index Housing Survey, 1220–0034;

Form No.	Affected public	Respondents	Frequency	Average time per response
BLS 222S	Renters, managers, and owners (including business or other for profit; small businesses or organizations).	42,400	Once	2 minutes.
BLS 222I	Renters, managers, and owners	3,000	Once	6 minutes.
BLS, 222NC	Renters, managers, and owners	900	Once	7 minutes.
BLS 222R	Renters, managers, and owners	40,000	Semi-annually	6.5 minutes.
BLS, 222R	Owners	27,000	Biennially	5 minutes.
BLS 222, CATI S	Renters, managers and owners	2,170	Once	4 minutes.
BLS 222, CATI R	Renters, managers, and owners	3,000	Semiannually	8 minutes.
BLS 222 CAPI	Renters, managers and owners	1,000	Annually	8 minutes.
14,198 hours.				

These forms are for the Consumer Price Index Housing Survey which measures price changes for the Rent and Owners' Equivalent Rent components of the Consumer Price Index, which account for 25 percent of its total weight.

Extension

Bureau of Labor Statistics, U.S. Export Product Information, 1220–0025, Monthly, Quarterly.

Form No.	Affected public	Respondents	Frequency	Average time per response
BLS 2894B	Small, medium, and large business firms	2,040	Annual	45 minutes.
BLS 3008	Small, medium, and large business firms	2,040	Annual	15 minutes.
BLS 3007D	Small, medium and large business firms	4,160	Monthly, quarterly	20.7 minutes.
BLS 3007E	Small, medium and large business firms	35	Annual	20.7 minutes.

Form No.	Affected public	Respondents	Frequency	Average time per response
13,737 total hours.				

The International Price Program indexes, some of the nation's primary economic indicators, are used as: Measures of price movements in international product prices; indicators of inflationary trends in the economy; sources of information used to determine U.S. monetary, fiscal, trade, and commercial policies. They are also used to deflate the Gross National Product.

U.S. Import Product Information,
1220–0026,
Monthly, Quarterly.

Form No.	Affected public	Respondents	Frequency	Average time per response
BLS 3007B	Small, medium, and large business firms	2,125	Annual	45 minutes.
BLS 3008	Small, medium, and large business firms	2,125	Annual	15 minutes.
BLS 3007D	Small, medium and large business firms	4,000	Monthly, quarterly	25.2 minutes.
BLS 3007E	Small, medium and large business firms	350	Annual	25.2 minutes.
16,153 total hours.				

The International Price Program indexes, some of the nation's primary economic indicators, are used as: Measures of price movements in international product prices; indicators of inflationary trends in the economy; sources of information used to determine U.S. monetary fiscal, trade, and commercial policies. They are also used to deflate the Gross National Product.

Signed at Washington, DC this 30th day of August, 1991.

Kenneth A. Mills,

Departmental Clearance Officer.

[FR Doc. 91–21309 Filed 9–5–91; 8:45 am]

BILLING CODE 4510–24–M

Bureau of Labor Statistics

State Research Advisory Committee on Occupational Safety and Health Statistics; Renewal

In accordance with the provisions of the Federal Advisory Committee Act, and after consultation with the General Services Administration, the Secretary of Labor has determined that the renewal of the State Research Advisory Committee to the Bureau of Labor Statistics (BLS) on Occupational Safety and Health Statistics is in the public interest in connection with the performance of the duties imposed on the Department of Labor by the Occupational Safety and Health Act of 1970 (29 U.S.C. 651). The Committee will advise the Commissioner for the Bureau of Labor Statistics on the broader aspects of proposals for the redesign of the Bureau's occupational safety and health program, including developmental as well as implementational facets.

The Committee consists of one representative from 45 States, the District of Columbia, and the Commonwealth of Puerto Rico. A chairperson is selected from the membership by the Commissioner for the Bureau of Labor Statistics and appointed by the Secretary of Labor. Nominations for Committee representatives are made by each jurisdiction and forwarded by the BLS Regional Commissioner for the BLS regional office serving each jurisdiction.

The Committee will function solely as an advisory body and in compliance with the provisions of the Federal Advisory Committee Act; its charter will be filed under the Act 15 days from the date of this publication.

Interested persons are invited to submit comments regarding the renewal of the State Research Advisory Committee on Occupational Safety and Health Statistics to the Bureau of Labor Statistics. Such comments should be addressed to William Eisenberg; Assistant Commissioner for Occupational Safety, Health and Working Conditions; Bureau of Labor Statistics; Department of Labor; room 4014, Patrick Henry Building; 601 D Street, NW., Washington, DC 20212, telephone: 202–272–6467.

Signed at Washington, DC, this 16th day of August 1991.

Lynn Martin,

Secretary of Labor.

[FR Doc. 91–21397 Filed 9–5–91; 8:45 am]

BILLING CODE 4510–24–M

Employment Standards Administration, Wage and Hour Division

Minimum Wages for Federal and Federally Assisted Construction; General Wage Determination Decisions

General wage determination decisions of the Secretary of Labor are issued in accordance with applicable law and are based on the information obtained by the department of Labor from its study of local wage conditions and data made available from other sources. They specify the basic hourly wage rates and fringe benefits which are determined to be prevailing for the described classes of laborers and mechanics employed on construction projects of a similar character and in the localities specified therein.

The determinations in these decisions of prevailing rates and fringe benefits have been made in accordance with 29 CFR part 1, by authority of the Secretary of Labor pursuant to the provisions of the Davis-Bacon Act of March 3, 1931, as amended (46 Stat. 1494, as amended, 40 U.S.C. 276a) and of other Federal statutes referred to in 29 CFR part 1, appendix, as well as such additional statutes as may from time to time be enacted containing provisions for the payment of wages determined to be prevailing by the Secretary of Labor in accordance with the Davis-Bacon Act. The prevailing rates and fringe benefits determined in these decisions shall, in accordance with the provisions of the foregoing statutes, constitute the minimum wages payable on Federal and federally assisted construction projects to laborers and mechanics of the

specified classes engaged on contract work of the character and in the localities described therein.

Good cause is hereby found for not utilizing notice and public comment procedure thereon prior to the issuance of these determinations as prescribed in 5 U.S.C. 553 and not providing for delay in the effective date as prescribed in that section, because the necessity to issue current construction industry wage determinations frequently and in large volume causes procedures to be impractical and contrary to the public interest.

General wage determination decisions, and modifications and supersedeas decisions thereto, contain no expiration dates and are effective from their date of notice in the **Federal Register**, or on the date written notice is received by the agency, whichever is earlier. These decisions are to be used in accordance with the provisions of 29 CFR parts 1 and 5. Accordingly, the applicable decision, together with any modifications issued, must be made a part of every contract for performance of the described work within the geographic area indicated as required by an applicable Federal prevailing wage law and 29 CFR part 5. The wage rates and fringe benefits, notice of which is published herein, and which are contained in the Government Printing Office (GPO) document entitled "General Wage Determinations Issued Under The Davis-Bacon And Related Acts," shall be the minimum paid by contractors and subcontractors to laborers and mechanics.

Any person, organization, or governmental agency having an interest in the rates determined as prevailing is encouraged to submit wage rate and fringe benefit information for consideration by the Department. Further information and self-explanatory forms for the purpose of submitting this data may be obtained by writing to the U.S. Department of Labor, Employment Standards Administration, Wage and Hour Division, Division of Wage Determinations, 200 Constitution Avenue NW., room S-3014, Washington, DC 20210.

Withdrawn General Wage Determination Decision

This is to advise all interested parties that the Department of Labor is withdrawing, from the date of this notice, General Wage Determination No. MD91-9 (as it applies to Cecil County) and No. FL91-18 (as it applies to Dade County).

Agencies with pending construction projects to which these wage decisions would have been applicable should utilize General Wage Determination Nos. MD91-6 and FL91-32. (See Regulations, 29 CFR part 1, § 1.5.) Contracts for which bids have been opened shall not be affected by this notice. Also, consistent with 29 CFR 1.6(c)(2)(i)(A), when the opening of bids is within ten (10) days of this notice, the contract specifications need not be affected. (See Regulations 29 CFR part 1, § 1.5.)

New General Wage Determination Decisions

The numbers of the decisions added to the Government Printing Office document entitled "General Wage Determinations Issued Under the Davis-Bacon and Related Acts" are listed by Volume, State, and page numbers(s).

Volume I

Florida:
FL91-18 (Sept. 6, 1991) ..... p.145, p.146.
West Virginia:
WV91-4 (Sept. 6, 1991) ..... p.1459, p.1460.

Volume III

Utah:
UT91-18 (Sept. 6, 1991) ..... p.450c, p.450d.
Washington:
WA91-10 (Sept. 6, 1991) ..... p.520a, p.520b.

Modifications to General Wage Determination Decisions

The numbers of decisions listed in the Government Printing Office document entitled "General Wage Determinations Issued Under the Davis-Bacon and Related Acts" being modified are listed by Volume, State, and page number(s). Dates of publication in the **Federal Register** are in parentheses following the decisions being modified.

Volume I

Connecticut:
CT91-1 (Feb. 22, 1991) ..... p.63, pp.65-66, 69, 74.
District of Columbia:
DC91-1 (Feb. 22, 1991) ..... p.79, pp.83-85.
Florida:
FL91-9 (Feb. 22, 1991) ..... p.121, pp.122-122a.
FL91-17 (Feb. 22, 1991) ..... p.141, p.143.
Massachusetts:
MA91-1 (Feb. 22, 1991) ..... p.421, pp.423, 430.
New Jersey:
NJ91-2 (Feb. 22, 1991) ..... p.701, pp.705-706.
New York:
NY91-4 (Feb. 22, 1991) ..... p.807, pp.808-816.
Rhode Island:
RI91-1 (Feb. 22, 1991) ..... p.1149.

Volume II

Michigan:
MI91-1 (Feb. 22, 1991) ..... p.441, pp.442-460.
Missouri:
MO91-1 (Feb. 22, 1991) ..... p.651, pp.657, 671.
Oklahoma:
OK91-18 (Feb. 22, 1991) ..... p.1005, p.1006.

Volume III

Colorado:
CO91-4 (Feb. 22, 1991) ..... p.167, p.168.
CO91-5 (Feb. 22, 1991) ..... p.175, p.176.
CO91-10 (Feb. 22, 1991) ..... p.192a, p.192b.
Montana:
MT91-1 (Feb. 22, 1991) ..... p.231, p.233.
Washington:
WA91-1 (Feb. 22, 1991) ..... p.451, pp.452-456.
WA91-2 (Feb. 22, 1991) ..... p.477, pp.478-485.
WA91-5 (Feb. 22, 1991) ..... p.495, pp.496, 498a.
WA91-6 (Feb. 22, 1991) ..... p.499, p500.
WA91-7 (Feb. 22, 1991) ..... p.501, p.502.
WA91-8 (Feb. 22, 1991) ..... p.507, p.508.

General Wage Determination Publication

General wage determinations issued under the Davis-Bacon and related Acts, including those noted above, may be found in the Government Printing Office (GPO) document entitled "General Wage Determinations Issued Under The Davis-Bacon And Related Acts". This publication is available at each of the 50 Regional Depository Libraries and many of the 1,400 Government Libraries across the country. Subscriptions may be purchased from: Superintendent of Documents, U.S. Government Printing Office, Washington, DC 20402, (202) 783-3238.

When ordering subscription(s), be sure to specify the State(s) of interest, since subscriptions may be ordered for any or all of the three separate volumes, arranged by State. Subscriptions include an anual edition (issued on or about January 1) which includes all current general wage determinations for the States covered by each volume. Throughout the remainder of the year, regular weekly updates will be distributed to subscribers.

Signed at Washington, DC this 30th day of August 1991.

Alan L. Moss,

Director, Division of Wage Determinations.

[FR Doc. 91-21310 Filed 9-5-91; 8:45 am]

BILLING CODE 4510-27-M

Employment and Training Administration

Investigations Regarding Certifications of Eligibility to Apply for Worker Adjustment Assistance

Petitions have been filed with the Secretary of Labor under section 221 (a) of the Trade Act of 1974 ("the Act") and are identified in the appendix to this notice. Upon receipt of these petitions, the Director of the Office of Trade Adjustment Assistance, Employment and Training Administration, has instituted investigations pursuant to section 221 (a) of the Act.

The purpose of each of the investigations is to determine whether the workers are eligible to apply for adjustment assistance under title II, chapter 2, of the Act. The investigations will further relate, as appropriate, to the determination of the date on which total or partial separations began or threatened to begin and the subdivision of the firm involved.

The petitioners or any other persons showing a substantial interest in the subject matter of the investigations may request a public hearing, provided such request is filed in writing with the Director, Office of Trade Adjustment Assistance, at the address shown below, not later than September 16, 1991.

Interested persons are invited to submit written comments regarding the subject matter of the investigations to the Director, Office of Trade Adjustment Assistance, at the address shown below, not later than September 16, 1991.

The petitions filed in this case are available for inspection at the Office of the Director, Office of Trade Adjustment Assistance, Employment and Training Administration, U.S. Department of Labor, 200 Constitution Avenue, NW., Washington, DC 20210.

Signed at Washington, DC this 26th day of August, 1991.

Marvin M. Fooks,

Director, Office of Trade Adjustment Assistance.

APPENDIX

Petitioner (union/workers/firm)	Location	Date received	Date of petition	Petition No.	Articles produced
Allegheny Ludlum Steel Corp. (USWA)	West Leechburg, PA	08/26/91	08/14/91	26,239	Specialty steel.
Cambridge Shirt Mfg. Co. (Wkrs)	Hazleton, PA	08/26/91	08/14/91	26,240	Men's dress shirts.
Cliffs Drilling Co. (Co)	Broussard, LA	08/26/91	07/15/91	26,241	Oil, gas drilling.
CPC, Inc. (Wkrs)	Randolph, MA	08/26/91	08/06/91	26,242	Printed circuit boards.
Duncan Drilling Co. (Co)	Big Spring, TX	08/26/91	08/07/91	26,243	Oil drilling.
Force Outboards (AIW)	Hartford, WI	08/26/91	07/15/91	26,244	Outboard motor engines.
Fountain Manufacturing (Co)	Evansville, IN	08/26/91	08/16/91	26,245	Children's bib overalls.
Internt'l Resistive Co. (IRC) (Wkrs)	Brownsville, TX	08/26/91	08/09/91	26,246	Electronic resistors.
Kamei USA, Inc. (Co)	North Haven, CT	08/26/91	08/13/91	26,247	Automotive accessories.
Kelsey-Hayes Co. (AIW)	Jackson, MI	08/26/91	08/15/91	26,248	Disc-brakes, wheel cylinders.
Koh-I-Noor Rapidograph, Inc. (Wkrs)	Bloomsbury, NJ	08/26/91	08/15/91	26,249	Drafting and artist materials.
Levolor Corp. (Co)	Rockaway, NJ	08/26/91	08/14/91	26,250	Window coverings.
Levolor Corp. (Co)	Fairfield, NJ	08/26/91	08/14/91	26,251	Window coverings.
Mid-Western Machinery Co. (Co)	Joplin, MO	08/26/91	08/15/91	26,252	Rock drill replacement parts.
National Standard Co. (USWA)	Corbin, KY	08/26/91	08/28/91	26,253	Wire and woven wire cloth.
Ray's Bridal Creation's, Inc. (CO)	Corona, NY	08/26/91	08/12/91	26,254	Bridal headpieces and veils.
S-P Mfg. Inc. IAMAW	Solon, OH	08/26/91	08/14/91	26,255	Chucks for machine tools.
Schwinn Bicycle Co. (Wkrs)	Greenville, MS	08/26/91	08/14/91	26,256	Bicycles.
Seagate Technology, Inc. (Wkrs)	Bloomington, MN	08/26/91	07/28/91	26,257	Computer drives.
Selig Manufacturing Co., Inc. (USWA)	Silver City, NC	08/26/91	08/14/91	26,258	Wooden upholstered furniture.
Smith Energy Services (Wkrs)	Odessa, TX	08/26/91	08/27/91	26,259	Fracing oil wells.
Syntrex, Inc. (Wkrs)	New York, NY	08/26/91	08/08/91	26,260	Word processors and computers.
WES PAC Cedar Products (Co)	Humptulips, WA	08/26/91	08/12/91	26,261	Cedar shakes.

[TA-W-26,047]

Russell Drilling Company, Harvey, ND; Termination of Investigation

Pursuant to section 221 of the Trade Act of 1974, an investigation was initiated on July 8, 1991, in response to a worker petition which was filed on July 8, 1991, on behalf of workers at Russell Drilling Company, Harvey, North Dakota.

All workers were separated from the subject firm more than one year prior to the date of the petition. Section 223 of the Act specifies that no certification may apply to any worker whose last separation occurred more than one year before the date of the petition. Consequently, further investigation in this case would serve no purpose, and the investigation has been terminated.

Signed at Washington, DC, this 29th day of August, 1991.

Marvin M. Fooks,

Director, Office of Trade Adjustment Assistance.

[FR Doc. 91-21395 Filed 9-5-91; 8:45 am]

BILLING CODE 4510-30-M

Job Training Partnership Act: Announcement of Proposed Noncompetitive Grant Awards

AGENCY: Employment and Training Administration, Labor.

ACTION: Notice of intent to award a noncompetitive grant.

SUMMARY: The Employment and Training Administration (ETA) announces its intent to award a noncompetitive grant to the Foundation for Advancements in Science and Education of Los Angeles, California, for the provision of specialized services under the authority of the Job Training Partnership Act (JTPA).

DATES: It is anticipated that this grant award will be executed by September 16, 1991, and will be funded for fifteen months. Submit comments by 4:45 p.m. (Eastern Time), on September 16, 1991.

ADDRESSES: Submit comments regarding this proposed assistance award to: U.S. Department of Labor, Employment and Training Administration, room C4305, 200 Constitution Avenue, NW., Washington, DC 20210, Attention: Charlotte Adams; Reference FR-DAA-004-91.

SUPPLEMENTARY INFORMATION: The Employment and Training Administration (ETA) announces its intent to award a noncompetitive grant to the Foundation for Advancements in

Science and Education of Los Angeles, California. The grantee will enhance student interest in math, particularly those at risk of failure in school and the workplace, by stressing the "real world" application of math and science concepts, increasing awareness of career activities and providing a vehicle for enhanced support of educational goals. There will be twelve, fifteen-minute episodes developed and broadcasted nationally on television. Funds for this activity are authorized by the Job Training Partnership Act, as amended, Title IV—Federally Administered Programs. The proposed funding is approximately $400,000 for fifteen months.

Signed at Washington, DC on August 23, 1991.

Robert D. Parker,

ETA Grant Officer.

[FR Doc. 91-21396 Filed 9-5-91; 8:45 am]

BILLING CODE 4510-30-M

Commission on Achieving Necessary Skills; Open Meeting

AGENCY: Employment and Training Administration, Labor.

SUMMARY: The Secretary's Commission on Achieving Necessary Skills (SCANS) was established in accordance with the Federal Advisory Committee Act (Public Law 92-463) on February 20, 1990. The SCANS is to advise the Secretary on national competency guidelines for the skills required of high school graduates for entry into employment. The Commission has the practical task of specifying and quantifying levels of skills' attainment to perform different types of jobs adequately.

TIME AND PLACE: The seventh meeting will be held on September 20, 1991 from 8:30 a.m. until 4:30 p.m. at the Holiday Inn Crowne Plaza, 300 Army Navy Drive, Arlington, VA 22202.

AGENDA: The agenda for the meeting follows:

1. Discussion with Educators about Implementing SCANS in a School System.
2. Discussion Concerning Implementing SCANS Outside School Systems.

PUBLIC PARTICIPATION: The meeting will be open to the public. Time will be set aside for public comments. Seating will be available for the public on a first-come, first-serve basis. Five seats will be reserved for the media. Handicapped individuals wishing to attend should contact the Commission to obtain appropriate accommodations. Individuals or organizations wishing to submit written statements should send 10 copies to Dr. Arnold Packer, Executive Director, SCANS—room C-2318, U.S. Department of Labor, 200 Constitution Avenue, NW., Washington, DC 20210. Papers received on or before September 13, 1991 will be included in the record of the meeting.

FOR FURTHER INFORMATION CONTACT: Dr. Arnold Packer, Exec. Dir., SCANS—room C-2318, U.S. Department of Labor, 200 Constitution Avenue, NW., Washington, DC 20210, (202) 523-4840.

Signed at Washington, DC this 30th day of August 1991.

Lynn Martin,

Secretary of Labor.

[FR Doc. 91-21340 Filed 9-5-91; 8:45 am]

BILLING CODE 4510-30-M

MARTIN LUTHER KING JR. FEDERAL HOLIDAY COMMISSION

AGENCY: The Martin Luther King, Jr. Federal Holiday Commission.

ACTIGN: Notice of meeting.

SUMMARY: In accordance with the Federal Advisory Committee Act, Public Law 92-463 as amended, The Martin Luther King, Jr. Federal Holiday Commission announces a forthcoming meeting of the Commission.

DATES: October 9, 1991.

TIME: 12-2 p.m.

LOCATION: Rayburn House Office Building, room 2168 (The Gold Room), Washington, DC.

TOPICS TO BE ADDRESSED:

Review of Commission Activities for 1991.

Reports from Committees for the Commission.

Financial Report.

FOR FURTHER INFORMATION CONTACT: Madeline Y. Lawson, The Martin Luther King, Jr. Federal Holiday Commission, Washington, DC 20410 (202) 708-1005.

Dated: August 26, 1991.

Madeline Y. Lawson,

Deputy Executive Director.

[FR Doc. 91-21329 Filed 9-5-91; 8:45 am]

BILLING CODE 4210-01-M

NATIONAL AERONAUTICS AND SPACE ADMINISTRATION

[Notice (91-78)]

NASA Advisory Council (NAC), Space Science and Applications Advisory Committee (SSAAC), Astrophysics Subcommittee; Meeting

AGENCY: National Aeronautics and Space Administration.

ACTION: Notice of Meeting.

SUMMARY: In accordance with the Federal Advisory Committee Act, Public Law 92-463, as amended, the National Aeronautics and Space Administration announces a forthcoming meeting of the NASA Advisory Council, Space Science and Applications Advisory Committee, Astrophysics Subcommittee.

DATES: September 26, 1991, 9 a.m. to 11 a.m. and noon to 4 p.m. (to be held at the National Aeronautics and Space Administration, 600 Independence Avenue, SW., room 226A); and 11 a.m. to noon (to be held at the National Aeronautics and Space Administration, 400 Maryland Avenue, SW., room 6104).

ADDRESSES: The National Aeronautics and Space Administration, 600 Independence Avenue, SW., room 226A, Washington, DC 20546; and the National Aeronautics and Space Administration, 400 Maryland Avenue, SW., room 6104, Washington, DC 20546.

FOR FURTHER INFORMATION CONTACT: Ms. Lia LaPiana, Code SZ, National Aeronautics and Space Administration, Washington, DC 20546 (202/453-1433).

SUPPLEMENTARY INFORMATION: The Space Science and Applications Advisory Committee (SSAAC) consults with and advises the NASA Office of Space Science and Applications (OSSA) on long-range plans for, work in progress on, and accomplishments of NASA's Space Science and Applications programs. The Astrophysics Subcommittee provides advice to the Astrophysics Division and to the SSAAC on operation of the Astrophysics Program and on the formulation and implementation of the Astrophysics research strategy. The Subcommittee will meet to discuss recent developments in the NASA Astrophysics Program, current and future areas of technology being pursued by the Astrophysics Division, the results of the SSAAC Woods Hole Planning Workshop, and future meetings. The Subcommittee is chaired by Dr. Irwin Shapiro and is composed of 24 members. The meeting will be open to the public up to the capacity of the room (approximately 50 people including Subcommittee members). It is imperative that the meeting be held on this date to accomodate the scheduling priorities of the key participants.

Type of meeting: Open.

Agenda:

Thursday, September 26

9 a.m.—Introduction and Recent Developments in the NASA

Astrophysics Program.

10:10 a.m.—Explorer Program Update.

10:40 a.m.—Advanced Program Update.

11 a.m—NASA Gamma Ray Observatory Press Conference.

11:30 a.m.—Space Science and Technology Advisory Committee Plan.

1 p.m.—Astronomy and Astrophysics Survey Committee and the Results of the SSAAC Woods Hole Planning Workshop.

2 p.m.—Round Table Discussion of the Implementation of Astrophysics Strategic Plan.

3:45 p.m.—Future Meeting Planning.

4 p.m.—Adjourn

Dated: August 30, 1991.

John W. Gaff,

Advisory Committee Management Officer, National Aeronautics and Space Administration.

[FR Doc. 91-21366 Filed 9-5-91; 8:45 am]

BILLING CODE 7510-01-M

NATIONAL COMMISSION ON MIGRANT EDUCATION

Meeting

ACTION: Notice of meeting.

SUMMARY: The National Commission on Migrant Education will hold its twelfth meeting on September 22 and 23, 1991, for the purpose of conducting a business meeting and holding a hearing. The Commission was established by Public Law 100-297, April 28, 1988.

DATE TIME AND PLACE: Sunday, September 22, 1991, 9 a.m. to 4 p.m.; and Monday, September 23, 1991, 8 a.m. to 4 p.m.; Ramada Inn, Ambassador I and II, 8400 Wisconsin Avenue, Bethesda, Maryland 20814.

STATUS: Open—public.

AGENDA: Scheduled witnesses will provide testimony on demographics, the education of handicapped migrant children, at-risk populations, HEP/CAMP and programs for gifted migrant children.

FOR FURTHER INFORMATION CONTACT: Elizabeth J. Skiles, (301) 492-5336, National Commission on Migrant Education, 8120 Woodmont Avenue, Fifth Floor, Bethesda, Maryland 20814.

Linda Chavez,

Chairman

[FR Doc. 91-21362 Filed 9-5-91; 8:45 am]

BILLING CODE 6820-DE-M

RAILROAD RETIREMENT BOARD

Agency Forms Submitted for OMB Review

AGENCY: Railroad Retirement Board.

ACTION: In accordance with the Paperwork Reduction Act of 1980 (44 U.S.C. chapter 35), the Railroad Retirement Board has submitted the following proposal(s) for the collection of information to the Office of Management and Budget for review and approval.

Summary of Proposal(s)

(1) *Collection title:* Application and Claim for Sickness Insurance Benefits.

(2) *Form(s) submitted:* SI-1a/1b, SI-3, SI-7, SI-7a, SI-8, ID-7H, ID-11A.

(3) *OMB Number:* 3220-0039.

(4) *Expiration date of current OMB clearance:* Three years from date of OMB approval.

(5) *Type of request:* Revision of a currently approved collection.

(6) *Frequency of response:* On occasion.

(7) *Respondents:* Individuals or households, Businesses or other for-profit.

(8) *Estimated annual number of respondents:* 113,000.

(9) *Total annual responses:* 403,480.

(10) *Average time per response:* .091037 hours.

(11) *Total annual reporting hours:* 36,732.

(12) *Collection description:* Under section 2 of the Railroad Unemployment Insurance Act, sickness benefits are provided for qualified railroad employees. The collection obtains information from employees and physicians needed for determining eligibility for and amount of such benefits.

ADDITIONAL INFORMATION OR COMMENTS: Copies of the proposed forms and supporting documents can be obtained from Dennis Eagan, the agency clearance officer (312-751-4693). Comments regarding the information collection should be addressed to Ronald J. Hodapp, Railroad Retirement Board, 844 Rush Street, Chicago, Illinois 60611 and the OMB reviewer, Laura Oliven (202-395-7316), Office of Management and Budget, room 3002, New Executive Office Building, Washington, DC 20503.

Dennis Eagan,

Clearance Officer.

[FR Doc. 91-21389 Filed 9-5-91; 8:45 pm]

BILLING CODE 7905-01-M

SECURITIES AND EXCHANGE COMMISSION

Requests Under Review by Office of Management and Budget Agency Clearance Officers—Kenneth A. Fogash (202) 272-2142

Upon written request copies available from: Securities and Exchange Commission, Public Reference Branch, Washington, DC 20549-1002.

New, Rule 13h-1 and Form 13-H, File No. 270-358.

Notice is hereby given that pursuant to the Paperwork Reduction Act of 1980 (44 U.S.C. 3501 *et seq.*), the Securities and Exchange Commission has submitted for clearance under the Securities Exchange Act of 1934 (15 U.S.C. 78 *et. seq.*) proposed Rule 13h-1 (17 CFR 240.13h-1) and Form 13-H, which would require that certain large traders and broker-dealers disclose to the Commission information concerning large trader accounts and transactions. It is estimated that approximately 630 broker-dealers would incur an average burden of 25 hours annually, and that approximately 1,000 large traders would incur an average burden of one and one half hours annually, to comply with the proposed rule.

Direct general comments to Gary Waxman at the address below. Direct any comments concerning the accuracy of the estimated average burden hours for compliance with Securities and Exchange Commission rules and forms to Kenneth A. Fogash, Deputy Executive Director, Securities and Exchange Commission, 450 Fifth Street, NW., Washington, DC 20549 and Gary Waxman, Clearance Officer, Office of Management and Budget, room 3208, New Executive Office Building, Washington, DC 20503.

Dated: August 23, 1991.

Margaret H. McFarland,

Deputy Secretary.

[FR Doc. 91-21404 Filed 9-5-91; 8:45 am]

BILLING CODE 8010-01-M

[Release No. 34-29638; File No. SR-NASD-90-18]

Self-Regulatory Organizations; National Association of Securities Dealers, Inc.; Order Approving Proposed Rule Change Relating to the Criteria For Initial and Continued Inclusion on the NASDAQ System

August 30, 1991.

The National Association of Securities Dealers, Inc. ("NASD" or "Association") filed a proposed rule change on April 9, 1990, pursuant to section 19(b)(1) of the

Securities Exchange Act of 1934 ("Act") [1] and Rule 19b–4 [2] thereunder, that revises the criteria for initial and continued inclusion of securities in the NASDAQ system. The NASD amended the proposal on August 7, 1990, and March 4, 1991.

Notice of the proposal together with the substance of the terms of the proposed rule change was provided by the issuance of two Commission releases (Securities Exchange Act Release Nos. 27906, April 13, 1990; 28391, August 29, 1990) and by publication in the **Federal Register** (55 FR 15052, April 20, 1990, and 55 FR 36372, September 5, 1990, respectively).[3] As a result of these notices, and prior notice of SR–NASD–90–8, the Commission received 115 comment letters regarding the proposed rule change.[4]

I. Background and Description

Schedule D, Part II to the NASD By-Laws [5] contains the qualification requirements for inclusion of securities on the NASDAQ system. These requirements were last amended by the NASD in 1981.[6] since that time, significant changes to the NASDAQ market, and the regulatory regime under which it operates, have occurred. The number of issues included in the NASDAQ system increased 28%, from 3,687 issues in 1981 to 5,144 issues in 1988. In fact, NASDAQ grew in this time period to become the second largest U.S. securities market.[7] Additionally, the general rate of inflation in the United States has been 42.3% from December, 1981 through December, 1990.[8]

As a separate matter, during the 1980s there was widespread concern about the occurrence of so-called penny stock fraud.[9] This concern led the Commission to adopt rule 15c2–6 under the Securities Exchange Act of 1934 ("Rule 15c2–6" or "Rule"), which requires that broker-dealers selling certain low-priced securities make a documented suitability determination regarding new purchasers and obtain the purchasers' written agreement to the first three purchases of such securities. The Rule's sales practice requirements do not apply to exchange listed or NASDAQ-included securities. Because the exemption from rule 15c2–6 of NASDAQ stocks created an incentive to list low-priced securities otherwise subject to the Rule, the Commission staff wrote the NASD to urge the Association to scrutinize carefully issuer applications for inclusion on NASDAQ to ensure that low-priced securities obtaining entry on NASDAQ fully complied with all NASDAQ inclusion standards.[10]

Subsequently, Congress enacted the Securities Enforcement Remedies and Penny Stock Reform Act of 1990 ("Pennv Stock Reform Act" or "Legislation").[11] The Penny Stock Reform Act creates a comprehensive regulatory scheme for penny stocks, providing the Commission expanded authority to adopt rules wi.h respect to such securities. The Commission, pursuant to the mandate in the Legislation, has proposed a series of Rules, which include exemptions for NASDAQ securities from a number of the broker-dealer disclosure requirements.[12]

In this context, the NASD has proposed to revise its listing standards for initial and continued inclusion for securities in the NASDAQ system. With the present filing the NASD is proposing the following changes to its initial inclusion and maintenance criteria, as compared to the present criteria:

NASDAQ LISTING STANDARDS

	Current criteria	Proposed criteria
(1) Number of Market Makers	Initial: 2	Initial: 2.
	Continued: 1	Continued: 2.[1]
(2) Total issuer assets	Initial: $2M	Initial: $4M.
	Continued: $750K	Continued: $2M.
(3) Capital and Surplus	Initial: $1M	Initial: $2M.
	Continued: $375K	Continued: $1M.
(4) Minimum bid price per share	No current criteria	Initial: $3.[2,3]
		Continued: $1.
(5) Market value of public float	No current criteria	Initial: $1M.
		Continued: $200K.[3]

[1] If an issue has only one market maker for 10 consecutive business days, then the rule will provide the issuer 30 days to find an additional market maker.
[2] If the bid price per share goes below $1, the security can remain on NASDAQ if the market value of the public float remains at $1M and the capital and surplus of the issuer is $2M.

[1] 15 U.S.C. 78s(b)(1) (1988).

[2] 17 CFR 240.19b–4 (1990).

[3] The instant rule change was not in its final form until August 7, 1990. The NASD originally filed a proposed rule change to establish interim initial inclusion criteria pursuant to section 19(b)(3)(A) of the Act [15 U.S.C. 78s(b)(3)(A)] on February 9, 1990 (File No. SR–NASD–90–7). On February 16, 1990, the NASD withdrew that proposal. *See* letter from T. Grant Callery, Vice President and Deputy General Counsel, NASD, to Katherine England, Branch Chief, Branch of Over-the-Counter Regulation, Division of Market Regulation, Securities and Exchange Commission ("SEC" or "Commission"), dated February 16, 1990. On February 15, 1990, the NASD submitted, pursuant to Section 19(b)(1), a proposed rule change identical to that filed on February 9th, in order to allow for a notice and comment period. *See* Securities Exchange Act Release No. 27731 (February 23, 1990), 55 FR 7615 (March 2, 1990) (File No. SR–NASD–90–8). As noted above, the Association filed SR–NASD–90–18 on April 9, 1990. In the original filing, SR–NASD–90–8, the NASD first proposed new initial listing criteria, and amended that proposal in SR–NASD–90–18. SR–NASD–90–18 also incorporated by reference the February 15, 1990, effective date in SR–NASD–90–8 for the initial criteria. The NASD then formally withdrew SR–NASD–90–8 on April 11, 1990. *See* letter from T. Grant Callery to Katherine England, dated April 11, 1990. Amendment No. 3, dated March 4, 1991, is a technical amendment clarifying the placement of proposed rule change language in the NASD Securities Dealers Manual and the renumbering of existing NASDAQ listing criteria.

[4] A listing of the comment letters with respect to SR–NASD–90–8 and 90–18 can be found in Appendix A to this Order.

[5] NASD Securities Dealers Manual, CCH ¶ 1803.

[6] *See* Securities Exchange Act Release No. 18150 (October 5, 1981), 46 FR 50451 (October 13, 1981), approving File No. SR–NASD–81–15.

[7] *See* NASD Press Release, "NASDAQ Grows Fivefold in the 1980s," December 29, 1989. In 1981, NASDAQ had an annual share volume of 7.8 billion shares traded. In 1988, total volume of the year was 31 billion shares traded. In 1989, total volume for the year was 33.5 billion shares traded, with 4,963 securities in the NASDAQ system. In 1990, there were 4,706 securities in the NASDAQ system and the total volume for the year was 33.4 billion shares traded.

[8] The general rate of inflation refers to the cumulative increase in the Consumer Price Index for the period of time stated, as made available by the Bureau of Labor Statistics of the United States Department of Labor.

[9] *See* The NASAA Report on Fraud and Abuse In The Penny Stock Industry, September 1989. This Report to the U.S. House of Representatives estimates that Americans lose at least $2 billion each year as a result of schemes involving penny stocks.

[10] *See* letter from Richard G. Ketchum, Director, Division of Market Regulation, SEC, to Joseph H. Hardiman, President, NASD, dated January 10, 1990.

[11] Pub. L. No. 101–429, 104 Stat. 931 (October 15, 1990).

[12] *See* Securities Exchange Act Release No. 29093 (April 17, 1991), 56 FR 19165 (April 25, 1991).

[3] An issuer has 90 days to cure a deficiency in the minimum bid price per share or in the market value of the public float. The initial inclusion standards would apply retroactively to February 15, 1990, as discussed in Note 3, *supra*.

II. Comments

As noted the Commission received 115 comment letters from 101 separate individuals or entities regarding the proposed rule change or certain aspects of the same. This total includes all comments received on the proposal from the initial filing in February, 1990, through the last published notice of amendment in September, 1990. Twenty-two securities industry related firms and broker-dealers commented; all were opposed to the proposed rule. Thirty-five issuers commented and, for the most part, opposed the proposal in whole or at least as to significant elements of the proposal. Thirteen lawyers or law firms commented, primarily in opposition to the rule change. Comments were also sent in by seven trade associations or association members, two congressmen (one of which communicated a constituent's concern with the rule change), nine states and thirteen individual investors. All of the state securities authorities supported the proposal, as did the Security Traders Association ("STA") and the North American Securities Administrators Association, Inc. ("NASAA"). Other regional securities firm trade associations and the majority of the individual investors opposed the proposed rule change.

A. Comments in Opposition

1. Initial Inclusion Criteria

Commentators opposed to the initial inclusion criteria raised several common concerns based on these general principles: (1) The criteria used by the NASD do not establish the legitimacy of a company, *i.e.*, a company can be legitimate and still not have significant net assets or a high price per share when initially offered; (2) the proposal effectively expands the scope of Rule 15c2–6 and improperly undercuts the compromise approach that the Rule embodied, *i.e.*, low-priced shares of companies that listed on an exchange or were included in NASDAQ were not subject to the restrictive requirements of the Rule; (3) the proposal keeps small, emerging growth companies from the visibility of the NASDAQ market and thus hinders those companies' ability to raise capital for starting or expanding operations; (4) the U.S. economy, and particularly those states that are attractive to certain of these companies, will be hurt by the lack of company expansion and job creation resulting from a shortage of capital; and (5) the removal of low-priced companies from NASDAQ has a deleterious effect on the investor because the shift of these companies from NASDAQ, with its information reporting requirements, price discovery capability and liquid market, to that of the Pink Sheet market [13] where information, pricing, and liquidity are irregular, prevents the investor from obtaining vital investment information.

The commentators suggested several alternatives to the NASD's approach. Some believed that the NASD's proposal came too soon after the implementation of the rule 15c2–6 for that Rule to have an effect on the problems in the lower-priced arena. For that reason, these commentors proposed that the implementation of the proposal be delayed until rule 15c2–6 had been effective for a period of time, at which point a study could be undertaken to determine the necessity for the NASD's revised standards. Other commentators proposed the tiering of the NASDAQ market to permit all companies that wanted to be included in the system to be included in one tier and to then boost the criteria for inclusion on a tier for higher priced, better-capitalized companies. Indeed, several commentators argued that NASDAQ should have no standards at its lower level to permit all companies to trade thereon, thus providing a more visible market to the investor.

2. Maintenance Criteria

Commentators on the continued inclusion criteria aspect of the proposal reflected similar concerns and focused on several additional matters. Specifically, some companies currently included in NASDAQ that would not be able to meet a particular new criterion, especially the $1.00 price per share requirement, opposed the proposal. Several companies that have traded on NASDAQ for up to ten years expressed significant concern that, but for their price per share, the issue would be included on NASDAQ and, as a result of the change, these long-term companies with substantial assets believe that they will be relegated to an illiquid market where their investors will be harmed by seeing the price of their shares deteriorate even further in a thinly traded market.

[13] The National Quotation Bureau publishes on a daily basis indications of interest in securities, commonly known as the Pink Sheets because the indications are printed on pink paper.

B. Comments In Favor of the Proposal

In contrast to the views of issuers and their lawyers, the NASD, the self-regulatory organization charged with policing the over-the-counter ("OTC") market, the STA, the trade association which represents OTC traders, NASAA, and several state securities administrators all support adoption of the rule change.[14] These commentators noted the significance of the problem with certain market makers manipulating the prices of low-priced thinly traded securities and praised the efforts of the Commission in implementing rule 15c2–6. These commentators expressed the view that the proposed rule change was necessary to prevent these same unscrupulous market makers and issuers from attempting to circumvent the restrictions of the Rule by seeking listing on an exchange or on NASDAQ. Moreover, several commentators noted that there has been a significant increase in inflation over the time from which the NASD last reviewed its asset level criteria. Accordingly, these commentators saw the need to raise inclusion and maintenance levels to adjust for inflation and to prevent subversion of the Rule.

III. NASD Response

After initial notice of SR–NASD–90–8 and 90–18, the NASD examined and considered the public comments received on the proposal, culminating in

[14] Securities authorities from the States of California, Delaware, Idaho, Iowa, Maine, Massachusetts, New Mexico, Texas, and Utah commented in support of the proposed rule change. All commentors to the proposal are listed in Appendix A to this Order.

Typical of the concerns raised by state securities administrators are those of the State of Idaho. It has observed a surge in popularity of so called "blind-pool/bland-check" offerings, which it views as inherently fraudulent because of the lack of effective disclosure; in addition, the state has noted an increase in the attempted migration of small OTC companies to the exchanges and NASDAQ since the implementation of rule 15c2–6. Another concern, raised by the State of Maine, is that during the last four years, it has brought one criminal prosecution and four civil actions against penny stock sellers, which it considers a substantial expenditure for a comparatively small state which does not have any penny stock operations located within its borders. Additionally, the states reiterated the need to raise the listing standards because of the implication of NASDAQ inclusion for state regulation. Some states provide exemption from securities registration for NASDAQ issuers ("blue sky exemptions"). Inasmuch as the federal standards are diminished by inflation and fraudulent activity, the states, by operation of the blue sky exemptions, likewise see their own investor protection standards eroded.

a formal response to the Commission on July 26, 1990 [15] and the filing of Amendment No. 2 ("Amendment") to 90–18 on August 7, 1990. The NASD modified the proposal with the Amendment to address issues raised by commentators which the Association considered to be valid points warranting appropriate changes to the rule filing.

The amended proposal retains a minimum bid price of $1 per share as part of the maintenance criteria, as first proposed in the April 9, 1990 filing of SR–NASD–90–18. Pursuant to the Amendment, however, companies falling below the $1 per share minimum may continue to qualify for NASDAQ listing if the market value of the issuer's public float is $1 million and its capital and surplus are $2 million. The NASD agreed with many commentators that at times companies experience temporary adverse market conditions that cause the share price of their security to fall below $1 without having a serious impact on the health or viability of the company. The NASD believes that by allowing an issuer whose share price does fall below the minimum to continue its NASDAQ inclusion if the two conditions are met, it is addressing the legitimate concerns of the affected companies, without derogating from the intent of the rule change, *i.e.*, providing the investing public with quantitative indicia that NASDAQ listed securities represent equity in issuers that are sound and credible.

Similarly, the NASD has determined that it is more equitable to allow companies that have fallen below NASDAQ maintenance criteria to requalify for NASDAQ listing by meeting the applicable maintenance criteria rather than the applicable entry standards, as originally was proposed. Addressing the other issues raised by commentators, the NASD concluded that the proposal in its present configuration, in conjunction with the Commission's regulatory scheme, is appropriate.

As noted, certain commenters argued that the proposal would have an adverse impact on the capital formation process for small issuers, cause a loss of investor confidence in all small issues by forcing them to trade in the Pink Sheets, and diminish the NASD's surveillance capability of small issues without NASDAQ listing. The NASD believes that many of these concerns will be sufficiently addressed by the NASD's OTC Bulletin Board Service ("Service").

The Commission approved the Bulletin Board Service, the NASD's screen-based quotation system for non-NASDAQ securities, on May 1, 1990.[16] The Service is designed to collect and display quotation information entered by NASD member firms that function as market makers in non-NASDAQ securities. The Service operates on a real-time basis allowing eligible member firms to view, enter, and update information on certain non-NASDAQ securities. The NASD has reported that as of January 31, 1991, the Service included 239 registered market makers with 10,183 positions in 4,183 securities; 47% of those quotes have been firm on both sides of the market and another 24% have been firm on one side or the other. Additionally, the Commission recently has approved a rule proposal by the NASD that requires priced quotations entered into the Bulletin Board for domestic securities be at a firm price, whether the quote is one- or two-sided.[17]

While the NASD believes that capital formation ultimately depends on the actions of the market maker and investor confidence in the issuer, it is certain that the Bulletin Board Service will facilitate the process for the small issuer by providing public quotation capabilities that many commentators did not take into consideration. Additionally, the Association believes a recently approved amendment to the NASD By-Laws will improve the NASD's ability to monitor the small issuer market, which serves to buttress investor confidence in this market.[18]

Thus, the NASD has concluded that the new inclusion criteria, in conjunction with the Bulletin Board Service and the various regulatory requirements, will serve to strengthen, not weaken, investor confidence in the OTC market, resulting in stronger financial markets and enhanced capital formation.

IV. Discussion

Two competing issues are present in the NASD's proposal to increase the criteria it uses for initial and continued inclusion of an issue on the NASDAQ system. First, smaller, less well capitalized companies seek to list on NASDAQ in their efforts to raise the capital necessary for them to develop and grow. These companies and their shareholders look to this particular market for the visibility that contributes to progress as a viable entity. Conversely, balanced against the interest of companies in obtaining greater visibility in the capital markets, is the NASD's concern that the NASDAQ market could become a haven for certain speculative issues that by minimally satisfying existing authorization standards avoid the sales practice restrictions that would otherwise apply to them. Inclusion of large numbers of low-priced, less substantial companies in NASDAQ could reduce the confidence of investors in NASDAQ stocks generally, and thus impair the efficiency of the NASDAQ market as a whole.

After carefully weighing the concerns of the states, issuers, investors and brokers that commented on the proposal, the Commission has determined that the proposal's benefits outweigh any negative effect that may occur. Similarly, the Commission does not believe that the detrimental consequences foreseen by some of the commentators will transpire, especially in light of the most recent NASD amendment to the proposal. Accordingly, the Commission finds that the proposed rule change meets the criteria for approval under section 15A(b)(6) of the Act.

Commentators raised several issues of concern with the proposal. Several commentators believed that the

[15] *See* letter from T. Grand Callery, Vice President and Deputy General Counsel, NASD, to Katherine A. England, Branch Chief, SEC, dated July 26, 1990.

[16] Securities Exchange Act Release No. 27975 (May 1, 1990), 55 FR 19124 (May 8, 1990), approving File No. SR–NASD–88–19.

[17] *See* Securities Exchange Act Release No. 29261 (May 31, 1991), 56 FR 29297 (June 26, 1991), approving File No. SR–NASD–91–12.

[18] An amendment to Schedule H of the NASD By-Laws, which became effective on July 2, 1990 (*see* Securities Exchange Act Release No. 27968 (May 1, 1990), 55 FR 19132 (May 8, 1990)), requires member firms to file with the NASD the information specified by Securities Exchange Act Rule 15c2–11 before initiating or resuming a quotation of a non-NASDAQ OTC security in any quotation medium; unless an exemption is available, Schedule H therefore covers the Bulletin Board Service, the Pink Sheets, and any other regional/local medium comparable to the Pink Sheets.

The NASD further cites Sections 1 and 2 of Schedule H as providing surveillance for non-NASDAQ OTC securities. Section 2 helps the NASD "red-flag" trading irregularities in non-NASDAQ securities, which is defined in Section 1, by requiring brokers to report to the non-NASDAQ Reporting System the total volume of their sales and purchases. Schedule H has been further amended to increase the reporting for the non-NASDAQ Reporting System by: (a) Eliminating the reporting thresholds of $10,000 and 50,000 shares, so that the reporting requirements of Schedule H will apply to each non-NASDAQ security; and (b) expanding the definition of "non-NASDAQ security" to include OTC transactions in securities listed on a regional exchange which do not meet primary exchange listing requirements, and to include OTC trades in NASDAQ securities by persons not registered as a NASDAQ market maker in such securities. (*See* Securities Exchange Act Release No. 28932 (March 1, 1991), 56 FR 9991 (March 8, 1991), approving File No. SR–NASD–90–67.)

proposal could force legitimate companies into the Pink Sheets where information is less available and pricing is difficult, resulting in harm to the investor. Commentators also believed that the retroactive application of the proposal was inappropriate. Finally, many commentators were concerned that because failure to meet one of the continued inclusion criterion could result in elimination of an issue from NASDAQ, the proposal was unfair.

A. Pink Sheet Market

The Commission notes that the implementation of the NASD's Bulletin Board Service, in conjunction with the recently approved amendment to its operation,[19] should greatly enhance the non-NASDAQ OTC Market, alleviating commentator concerns of investor confidence and capital formation prospects for that market. As noted above, to date, the Bulletin Board Service has been successful in increasing transparency in the "Pink Sheet" market for low-price securities. Additionally, the Penny Stock Reform Act mandates that the Commission facilitate the implementation of one or more automated quotation systems for "penny stocks" that provide the bid and ask quotations of system participants and require the reporting of the volume of penny stock transactions, including last sale reporting. The Commission anticipates that this mandate will result in further enhancements to the Bulletin Board Service, *(e.g.,* firm, two-sided quotations with last sale reports) which will benefit non-NASDAQ OTC issuers by providing enhanced transparency and investor confidence.

B. Rule Application

As proposed, companies filing an application for inclusion on NASDAQ after February 15, 1990, and accepted onto NASDAQ prior to Commission approval of the rule would be required to come into compliance with the new criteria within 90 days after Commission approval of the proposal. In other words, the revised initial inclusion criteria would be applied to companies that list in the period between February 15, 1990, and date of approval of the instant proposal. The Commission finds good cause for the partial retroactive application of the rule change. The NASD's application of the initial inclusion criteria assists the Commission in its enforcement role pursuant to rule 15c2–6, a rule designed to prevent fraud and manipulation in the sale of low-priced, non-NASDAQ securities. The Commission believes it would be contrary to the public interest and inconsistent with the objectives of the proposal, as well as the integrity of rule 15c2–6 not to grant retroactive application of the initial inclusion criteria. After the Rule went into effect on January 1, 1990, the NASD reported a marked increase in applications for listing on the NASDAQ system. According to the Association, for the period from December 1, 1989 to January 31, 1990, there was a 20% increase in the number of companies applying for NASDAQ inclusion. This was in a period when the NASD expected, due to economic conditions, that there would be a decrease in the number of applications. Further, the NASD has found that applications for NASDAQ listing historically consist of approximately 50% initial public offerings and 50% pink sheet companies. For the period in question, the applications consisted the pink sheet issues at a ratio of 2 to 1. It is reasonable to conclude that some issuers were trying to circumvent the Penny Stock Rule. Furthermore, retroactive application of the proposed rule change is necessary in order to avoid creating a two-tiered NASDAQ market: one for those new issuers who do not have to meet the revised inclusion criteria, and one for those issuers who do have to meet the new requirements.

C. Price Per Share Maintenance Criterion

The price per share maintenance requirement, as proposed, would apply to all NASDAQ companies, including those that were listed prior to February 15, 1990. The Commission believes that the NASD's Amendment No. 2 to the proposed rule change should diminish, if it does not eliminate, the concerns of currently listed NASDAQ issuers with prices per share that are below $1.00. To the extent, however, that the amendment does not address a particular issuer's circumstances, the Commission notes that the concerns of those issuers may be allayed by a greater understanding of the NASD's process for review of issuers that fall below the criteria. NASD rules specifically grant issuers that no longer meet the continued inclusion criteria the right to seek review of the "delisting" before an NASD committee, at no cost to the issuer.[20] Among the factors that can be considered by the NASD when considering an exception request are the failure to meet only one listing criterion and the length of time that a company has been traded on NASDAQ. This is in addition to the provision in the proposal that permits currently included companies 6 months after the approval of the rule change to come into compliance with the revised maintenance by doing, for example, a reverse stock split to raise the price per share to the new level. Accordingly, the Commission believes that with the NASD's Amendment and the issuer's right of review of any "delisting," the new maintenance criteria should not have the negative impact some commentators believe.

V. Conclusion

Section 15A(b)(6) provides in part that the rules of the Association be designed to prevent fraudulent and manipulative acts and practices, to promote just and equitable principles of trade, and to protect investors and the public interest. Because the Commission finds that the increase in the criteria is designed to promote compliance with Commission rule 15c2–6 and thus prevent fraudulent and manipulative practices, the Commission finds that the proposal is consistent with section 15A(b)(6) of the Act. The Commission believes that the implementation of the rule change will protect investors and the public interest by providing much needed safeguards that investors can look to as an indication of the credibility of the companies they choose for investment. Additionally, the Commission finds that with the implementation of the OTC Bulletin Board, which provides an alternative means of trading for those securities that will not meet NASDAQ standards, the imposition of the new criteria will not unfairly discriminate among issuers in contravention of section 15A(b)(6). Further, the Bulletin Board will help ensure that this rule change does not impose any burden on competition not necessary or appropriate in furtherance of the purposes of the Act, as mandated by section 15A(b)(9) of the act.

It Is Therefore Ordered, Pursuant to section 19(b)(2) of the Act, that the

[19] *See* Note 17, supra

[20] NASD Securities Dealers Manual, Code of Procedure, Article IX, CCH ¶ 3101. The NASD has an issuer hearing fee to help defray the costs associated with the consideration of applications for exceptions. The rule, however, specifically does not apply to those issuers who are requesting an exception from a NASDAQ listing standard as the result of not meeting the new continued inclusion criteria approved in the instant Order. Therefore, issuers seeking a review of a delisting before an NASD committee (due to the criteria) may do so without incurring a charge. *See* Securities Exchange Act Release No. 29066 (April 10, 1991) 56 FR 15389 (April 16, 1991), approving SR–NASD–90–68.

proposed rule change, SR–NASD–90–18, be, and hereby is, approved.

By the Commission,

Jonathan G. Katz,

Secretary.

Dissenting Statement of Commissioner Fleischman

I dissent from the Commission's approval of the foregoing Order. In the present state of the non-NASDAQ over-the-counter market, I can only conclude that the instant NASD rule changes, removing some and excluding other legitimate smaller companies from NASDAQ, create rather than remove impediments to, and impair rather than perfect the mechanism of, a free and open market; fail in design by facilitating rather than avoiding an unfair discrimination among issuers; in general, injure rather than protect both investors and the public interest; and are therefore inconsistent with the requirements of section 15A(b)(6) of the Securities Exchange Act.

Amendment Number 1 to the rule filing approved by the foregoing Order makes clear that the stimulus for the NASD rule change proposal was the written request by this Commission, by letter of its Division of Market Regulation dated January 10, 1990, "express[ing] concerns that certain promoters might attempt to circumvent the requirements of rule 15c2–6 by seeking NASDAQ authorization." [21] The NASD forthrightly characterizes its responsive rule filing as "consistent with the intent of the Division's January 10th letter."[22] It is peculiar to me that, in January 1990, the Commission should have become so concerned about the possibility of "circumvention" of rule 15c2–6 via quotation of stock prices on NASDAQ, even through only five months earlier, the Commission had concluded that:

The exchange and NASDQ transaction reporting and surveillance systems operated by the SROs provide the basis for sufficient monitoring and prosecution of fraudulent activities, without the imposition at this time of the requirements of (rule 15c2–6). In addition, inssuers of securities traded on an exchange or NASDAQ must comply with increased corporate disclosure requirements. Moreover, an issuer whose securities trade on an organized, visible market is more likely to be followed by professional securities analysts and the public, with greater opportunity for efficient pricing of the issuer's securities. The Commission expects the SROs to join it, however, in closely monitoring for fraudulent sales activities in exchange and NASDAQ markets following effectiveness of the Rule to prevent the transfer of such activities into these markets (footnote omitted).[23]

Nothing presented to the Commission prior to January 1990 or prior to today, including the figures on unanticipated additions to the NASDAQ list in 1989–1990,[24] gave us grounds to believe there has been an increase in fraudulent sales activities affecting smaller NASDAQ issuers since August 1989.

By contrast, throughout the gestation process for rule 15c2–6, the Commission expressed its concern with respect to the impact of the Rule on legitimate small issuers and their access to the public markets for capital formation. In the Proposing Release, the Commission "emphasize[d] that the target of its proposal is sales practice abuse and manipulation, not small issues or speculative investment decisions *per se*",[25] and the Commission requested specific comment on any "undue burdens on. . .the issuer community"[26] as follows:

In light of the important longstanding role of small businesses in the nation's economy, the Commission in particular seeks the views of commentators on the impact of the rule on the capital raising requirements of small businesses. The Commission invites comment on whether the rule's requirements will, in practice, limit the ability of small over-the-counter issuers to attract new investors, impede the offering of new securities, or reduce liquidity in the market for small issuers' securities.[27]

Likewise, in the Adopting Release the Commission responded to commenters concerned about capital formation with a statement of its own views and a description of its actions in revising the Rule:

The Commission considers legitimate small business capital formation to be of great importance, and has considered carefully the effect of the Rule on small business capital formation, taking into account the views of the commenters. While many small businesses might have been able to avoid the effects of the Proposed Rule by raising capital through informal investors and venture capital, the Commission is concerned that the rule as proposed could have reduced the access of legitimate small issuers to the public markets. Accordingly, the Commission has modified the Proposed Rule in several respects to limit its effect on small business capital formation.

First, the Commission has streamlined substantially the paperwork requirements of the Rule. . .

Second, the Rule provides that offerings of securities approved for trading on an exchange or NASDAQ upon notice of issuance are excluded from the Rule . . . The current requirements for qualification on NASDAQ are relatively low, including total assets of $2 million and capital and surplus of $1 million. Consequently, the initial public offerings of small businesses that are going to be traded on NASDAQ will not be covered by the Rule. . .

The Commission believes that the [five major] changes incorporated in the Rule substantially reduce the Rule's effect on legitimate broker-dealers and issuers. (Footnotes, concerning Commission actions to lower the costs and simplify the process of small business capital formation and concerning "the extent to which the public securities markets provide capital to small businesses", omitted).[28]

That theme not only parallels the Congress' concern in 1980 over Federal regulatory impedance of capital formation, particularly for legitimate smaller issuers.[29] Clearly more important today, that theme also parallels Chairman Breeden's oft-expressed concern over the unfavorable cost of capital, in the United States and over the competitive disadvantage to the entire U.S. economy which, as a result of the additional cost of capital, "can powerfully discourage U.S. corporate investment in research and development, new plant and equipment, and other desirable productivity improvements."[30] One commenter stated that theme, and its relationship to the instant rule changes, in words that in any other context could have been Chairman Breeden's:

The financial media is [sic] currently replete with stories about how "the best and the brightest" of United States technologists are turning to foreign investors for critical, early stage capital. American technology is thus being sold at "fire sale" prices. In my view this is directly attributable to the increased difficulty that young American companies are experiencing in raising capital. The proposed rule represents yet another serious roadblock in the way of a small company seeking access to the public securities markets.[31]

[21] File No. SR–NASD 90–18, Amendment No. 1, at 2, 11.

[22] *Id.*

[23] Securities Exchange Act Release No. 27160, 44 SEC Docket (CCH) 600, 609 (Aug. 22, 1989) (the "Adopting Release").

[24] *See* Order, at 16–17.

[25] Securities Exchange Act Release No. 26529, 42 SEC Docket (CCH) 1148, 1153 (Feb. 8, 1989).

[26] *Id.*, at 1158.

[27] *Id.*

[28] Adopting Release at 605–6.

[29] Securities Act of 1933 Section 19(c)(2) (C) and (D).

[30] R. Breeden "Competition in the 1990's", Remarks Before The Commonwealth Club of California (Sept. 28, 1990), at 8.

[31] Comment letter No. 21 with respect to SR–NASD–90–8 (as listed in appendix A to the Order), at 4.

As a measure of the extent of the prospective impact of the instant rule changes on smaller companies, another commenter noted that at least 375 companies made initial public offerings at share prices of $3.00 or less (and would therefore have been excluded from NASDAQ under the foregoing Order) in the four years 1986–89, raising a total of nearly $1,300,000,000 of equity capital [32] or an average of approximately $3,250,000 per offering (hardly in the nature of blank-check offerings). Coincidentally, the Commission's public file on the instant rule proposal includes a 1989 NASD-supported study demonstrating the superior performance, in comparison with other companies in their industries, of 426 companies whose initial public offering was accompanied or followed by NASDAQ price quotation, in terms of employment, revenues, sales per employee, working capital, net fixed assets, and total assets, and drawing the implication that "By maintaining a free and open IPO market and avoiding restrictions that could impede its liquidity and efficiency, regulators can maximize the flow of equity capital to finance corporate and economic growth [in the United States]".[33]

Why, then, did this Commission prompt this NASD filing, excluding a class of smaller (though not illegitimate) IPO and non-IPO issuers from NASDAQ and relegating that class of issuers to the non-NASDAQ OTC market? And how, then, faced with a statement in the Adopting Release just two years ago that "Many unsophisticated investors may not appreciate the vast difference in the nature, market information, and supervision of the market between the exchange and NASDAQ markets, and the non-NASDAQ OTC market.", [34] does the Commission address its section 19(b) responsibilities in light of section 15A(b)(6) of the Act? [35] The answer advanced in the Order lies in the NASD's recently-initiated OTC Bulletin Board Service [36]—or, rather, will, at some undetermined date in the future, lie in the Bulletin Board.

In its Discussion, the Commission first states the smaller companies' interest "in obtaining greater visibility in the capital markets", then puts into the balance the NASD's twin concerns that NASDAQ "could become a haven for certain speculative issues that * * * avoid the sales practice restrictions" of rule 15c2–6 and whose inclusion in NASDAQ "could reduce the confidence of investors in NASDAQ stocks generally," and conclude that the "proposal's benefits outweigh any negative effect that may occur." [37] However the Commission may evaluate the NASD's concerns, especially in light of the Commission's own statements in the Adopting Release, those concerns are at best speculative. Similarly, at each point at which the Commission responded to small issuers' concerns by reliance on the Bulletin Board, the Commission's reliance is equally speculative:

> The Commission notes that the implementation of the NASD's Bulletin Board Service * * * should greatly enhance the non-NASDAQ OTC market * * * (footnote omitted) [38]
>
> The Commission anticipates that this mandate [of the Penny Stock Reform Act] will result in further enhancements to the Bulletin Board Service, (*e.g.* firm, two-sided quotations with last sale reports) which will benefit non-NASDAQ OTC issuers by providing enhanced transparency and investor confidence.[39]
>
> The Commission finds that with the implementation of the OTC Bulletin Board * * * the imposition of the new criteria will not unfairly discriminate among issuers * * *. Further, the Bulletin Board will help insure that this rule change does not impose any burden on competition not necessary or appropriate in furtherance of the purposes of the Act * * *.[40]

But, to date, the Bulletin Board has been "successful in increasing transparency" [41] only to the extent that quotations, more current than yesterday afternoon and firm for a single unit of trading, have been transferred from pink paper to an accessable video screen.

The Commission accurately states that "The Service operates on a real-time basis allowing eligible member firms to view, enter, and update information on certain non-NASDAQ securities." [42] I have no doubt that that represents a qualitative improvement for which the NASD is to be commended, but it is well short of the SOES capability of NASDAQ and it is only the very first step toward the automated quotation system mandated by the Penny Stock Reform Act. The speculative nature of the Commission's reliance on the Bulletin Board in its present state is only accentuated by the Commission's most recent release approving improvements to the Bulletin Board:

> "The Commission staff has requested that the NASD ascertain what other steps it will take to conform the Bulletin Board to the requirements * * * in section 17B. Specifically, the Commission staff has recommended that the NASD consider making available certain transaction [*sic*] information reported pursuant to Schedule H of the NASD By-Laws." [43]

If there were a truly transparent real-time Bulletin Board in place, or if there were a new marketplace for the stock of smaller emerging companies under the aegis of another respected self-regulatory organization (as has been reported to be in development), or even if the effectiveness of the instant rule change were postponed and coupled with an open invitation by the Commission for that kind of marketplace development within the period of postponed effective slot, I could understand the Commission's action today. But, as the Order has been framed to relegate these companies to the present Bulletin Board (and presumably to expose them to the tender mercies of those "broker dealers engaging in boiler-room operations [who] frequently choose a low-priced, non-NASDAQ OTC security as their sales product * * *")[44] with nowhere else to turn, I can neither understand nor concur. Somehow, somewhere, the conviction that small companies, their investors, and the marketplace generally

---

[32] Comment letter No. 36 with respect to SR–NASD–90–8 (as listed in appendix A to the Order), at 14.

[33] G. Yago and J. Tanenbaum, "The Economic Impact of IPOs on U.S. Industrial Competitiveness" (Dec. 1989), at 4, attached to comment letter No. 36 with respect to SR–NASD–90–8 (as listed in appendix A to the Order).

[34] Adopting Release, at 603.

[35] Pursuant to Section 19(b)(2), "The Commission shall approve a proposed rule change of a self-regulatory organization if it finds that such proposed rule change is consistent with the requirements of this title and the rules and regulations thereunder applicable to such organization. The Commission shall disapprove a proposed rule change of a self-regulatory organization if it does not make such finding." Section 15(a)(b)(6) of the Act requires that all NASD rules be:

> Designed to prevent fraudulent and manipulative acts and practices, to promote just and equitable principles of trade, to foster cooperation and coordination with persons engaged in regulating, clearing, settling, processing information with respect to, and facilitating transactions in securities, to remove impediments to and perfect the mechanism of a free and open market and a national market system, and, in general, to protect investors and the public interest, and are not designed to permit unfair discrimination between customers, issuers, brokers, or dealers, to fix minimum profits, to impose any schedule or fix rates of commissions, allowances, discounts, or other fees to be charged by its members, or to regulate by virtue of any authority conferred by this title matters not related to the purposes of this title or the administration of the association.

[36] *See* nn 16–18 of the Order.

[37] Order, at 14.

[38] *Id*, at 15.

[39] *Id*, at 15–16.

[40] *Id*, at 19.

[41] *Id*, at 15.

[42] *Id*, at 12.

[43] Securities Exchange Act Release No. 2926 , 48 SEC Docket (CCH) 1707, 1709 n. 10 (May 31, 1991).

[44] Adopting Release, at 603.

are benefited by the greater visibility and greater surveillance resulting from stock price quotation on NASDAQ has been replaced by a notion of "circumvention" of the requirements of Rule 15c2–6 to which I simply do not subscribe.

This Commission today engages in regulatory posturing, using the scythe of an SRO rule change to cut down the public market access of a class of legitimate American business enterprises that are in fact supposed to be particular beneficiaries of the federal government's regulatory actions. This is not the first time I have, in dissent, addressed action by this Commission that disadvantages this class of companies; they are apparently not large enough or loud enough to merit this Commission's concern in a concrete regulatory context, only to elicit abstract sympathy for the competitive disadvantage they suffer in cost of capital.[45]

One commenter said it well:

> The Commission's objective should be that each and every registered security is publicly traded within the best and fairest system possible. Banishment to a less than optimal system should not become a substitute for regulatory diligence.[46]

I concur with that commenter. I conclude that the instant NASD rule change is inconsistent with the requirements of section 15A(b)(6) of the Act.[47] I dissent from approval of the foregoing Order.

Appendix A to SR–NASD–90–18

With respect to SR–NASD–90–8, the following comment letters were received:

(1) David Cohen, Chief Financial Officer, J. D. Michael & Co., to Senator Pete Wilson, dated February 15, 1990;

(2) Tariq Ahmad to Richard C. Breeden, Chairman, Commission, dated February 21, 1990;

(3) Khalid Adnan, Kamputech, to Richard C. Breeden, dated February 25, 1990;

(4) Theodore A. Levine & W. Hardy Callcott, Wilmer, Cutler & Pickering to Clients and Other Friends of the Firms, dated February 27, 1990;

(5) Gail M. Price, Surveillance Dept., NASD, to Jonathan Katz, dated March 6, 1990, transmitting letter from William J. Klein, Esq., to NASD, dated February 27, 1990;

(6) Real Provencher, President, Marin Fund, Inc., to Jonathan G. Katz, dated February 28, 1990;

(7) William L. Yeates, Partner, Hein & Associates, to Jonathan G. Katz, Secretary, Commission, dated March 7, 1990;

(8) Joseph E. Draganosky, Psy. D., dated February 28, 1990, with transmittal letter from Gail M. Price, Surveillance Dept., NASD to Jonathan Katz, dated March 7, 1990;

(9) Annita M. Menogan, Bertrand T. Ungar, P.C., to Secretary, Commission, dated March 7, 1990;

(10) John B. Wills, Wills & Sawyer, P.C., to Jonathan G. Katz, dated March 7, 1990;

(11) Carylyn K. Bell, President, Corporate Stock Transfer, Inc., to Jonathan G. Katz, dated March 7, 1990;

(12) Kathy Galvin, President, Denver Security Traders Association, to Jonathan G. Katz, dated March 7, 1990;

(13) William T. Hart, Hart & Trinen, to Jonathan G. Katz, dated March 7, 1990;

(14) Gregory Pusey, USMX, Inc., to "To Whom it may concern," dated March 7, 1990;

(15) William A. Little III, President, Medeci, to Jonathan G. Katz, dated March 8, 1990;

(16) Dave Newcomb, President, Royce Park Investments, Inc., to Jonathan G. Katz, dated March 8, 1990;

(17) Ken Richards, Trading Manager, Orion Securities, Inc., to Commission, dated March 8, 1990;

(18) Douglas Nutt, President, Orion Securities, Inc., two letters, to Commission, dated March 8, 1990 and April 11, 1991;

(19) John E. Bradley, President, Tri-Bradley Investments, Inc., to Jonathan G. Katz undated;

(20) Rich Hateman, Glacier Water Systems, Inc., to Jonathan G. Katz, dated March 12, 1990;

(21) John S. Stoppelman to Jonathan G. Katz, dated March 13, 1990;

(22) Richard S. Berger, President, First Stock Transfer Co., to Jonathan G. Katz, dated March 13, 1990;

(23) S. James Horning, President, Rocky Mountain Securities & Investments, Inc., to Jonathan G. Katz, dated March 14, 1990;

(24) Judy VanBrocklin-Clarke, Rocky Mountain Securities & Investments, Inc., to Jonathan G. Katz, dated March 14, 1990;

(25) Timothy Collins, President, United Mining Corp., to Jonathan G. Katz, dated March 15, 1990;

(26) Albert G. Devejian, Secretary, UMC Electronics Co., to Jonathan G. Katz, dated March 19, 1990;

(27) Melissa G. Whitney, Secretary/Treasurer, Rocky Mountain Securities & Investments, Inc., to Jonathan G. Katz, dated March 19, 1990;

(28) John F. Guion, President, National Association of OTC Companies, to Jonathan G. Katz, dated March 19, 1990;

(29) William T. Richey, Vice President, Investment Banking, Rocky Mountain Securities & Investments, Inc., to Jonathan G. Katz, dated March 20, 1990;

(30) John E. Herzog, *et al.*, Herzog, Heine, Geduld, to Jonathan G. Katz, dated March 20, 1990;

(31) Itzhak Levi, Chairman of the Board, Optical Filters International Inc., to Secretary, Commission, dated March 20, 1990;

(32) Jeffrey E. Modesitt, Chairman & CEO, MLB Investments, Ltd., to "To Whom It May Concern," dated March 20, 1990;

(33) Raul N. Rodriguez, Rodriguez & Associates, to Secretary, Commission, dated March 20, 1990;

(34) Cal Krupa, CEO, Ultra Pac, Inc., to Jonathan G. Katz, dated March 21, 1990;

(35) Dennis Marino, President, Sherwood Securities Corp., to Jonathan G. Katz, dated March 21, 1990;

(36) J. Morton Davis, Chairman, D.H. Blair & Co., Inc., to Jonathan G. Katz, dated March 21, 1990;

(37) Robert S. Behr to Jonathan G. Katz, dated March 21, 1990;

(38) Paul Regas, Technical Director, Animark Inc., to Secretary, Commission, dated March 22, 1990;

(39) Patrick Daugherty to Jonathan G. Katz, dated March 22, 1990;

(40) Franklin N. Wolf, President, F.N. Wolf & Co., Inc., to Jonathan G. Katz, dated March 22, 1990;

(41) Krys, Boyle, Golz, Reich & Freedman to Jonathan G. Katz, dated March 22, 1990;

(42) Peter N. Bowinski, Treasurer, Kober Financial Corp., to Jonathan G. Katz, dated March 22, 1990;

(43) Marc N. Geman, Executive Vice President and General Counsel, The Stuart-James Co., Inc. (undated);

(44) John B.M. Frohling, Frohling & Hanley, to Howard Kramer, Assistant Director, Division of Market Regulation, Commission, dated March 23, 1990;

(45) Robert J. Mittman, Tenzer, Greenblatt, Fallon & Kaplan, to Jonathan G. Katz, dated March 26, 1990;

(46) Donald E. Fingers, President, Chemplex Products, Inc., to Jonathan G. Katz, dated March 26, 1990;

(47) Brad H. Hamilton, Counsel, Colony Pacific Exploration, Inc., to Jonathan G. Katz, dated March 28, 1990 and April 9, 1990 (two letters);

(48) Jarrold Bachmann, Bachmann-Devine Inc., to Jonathan G. Katz, dated March 28, 1990;

(49) Charles D. Wright, Enhanced Business Services, Inc., to Jonathan G. Katz, dated March 29, 1990;

(50) Michael F. Zinn, President, Besicorp Group, Inc., to Jonathan G. Katz, dated April 2, 1990;

(51) Dana M. Nelson, National Securities Corp., to Jonathan G. Katz, undated;

(52) Frank Manning, President, Zoom Telephonics, Inc., to Jonathan G. Katz, dated April 8, 1990;

(53) Gary Barton, President, XCEL Securities, Inc., to Jonathan G. Katz, dated April 9, 1990;

(54) Andre Di Mino, ADM Tronics, to President George Bush, dated April 12, 1990;

(55) Rudy Boschwitz, United States Senate, to Jonathan G. Katz, dated April 17, 1990; and

(56) Paul V. Hoovler, Matthew R. Hoovler, Chaparral Resources Inc., to Jonathan G. Katz, dated April 25, 1990.

With respect to File No. SR–NASD–90–18, the following comment letters were received:

(1) Junius W. Peake, Chairman, Peake/Ryerson Consulting Group, Inc., to Jonathan G. Katz, dated April 9, 1990;

---

[45] *See* R. Breeden, No. 30, *supra*.

[46] Comment letter No. 1 with respect to SR–NASD–90–18 (as listed in Appendix A to the Order, at 2.

[47] Only weeks ago, on June 6, 1991, this Commission, with me again in disagreement, refused to approve the MSRB proposal for an electronic information library because it made no provision for paper input. I could not then understand wherein lay the grounds for finding an inconsistency between that proposal and section 15B(6)(2)(c) of the Act. The contrast between the Commission's treatment of that proposal and its treatment of the instant rule change is striking.

(2) N. Thomas Steele, Administrative Vice President, Foreland Corporation, to Richard C. Breeden, dated April 13, 1990;

(3) R.V. Bailey, President, Aspen Exploration Corp., to Jonathan G. Katz, dated April 16, 1990;

(4) Ethan Patasnick, Secretary/Treasurer, Arthech Recovery Systems, Inc., to Jonathan G. Katz, dated April 16, 1990;

(5) William F. Chamberlain, Data Support Corp., to Jonathan G. Katz, dated April 19, 1990;

(6) Scott H. Hogan, President, Revotek Inc., to Jonathan G. Katz, dated April 25, 1990;

(7) Robert C. Beers and Stephen W. Wilk to Jonathan G. Katz, (three letters) dated April 27, 1990, May 10, 1990, and September 25, 1990;

(8) Russell G. Holley, President, Amacan Resources Corp., to Jonathan G. Katz, dated April 27, 1990;

(9) Mitchell A. Lekas, President, Geokinetics, Inc., to Jonathan G. Katz, two letters, dated April 30, 1990 and March 1, 1991;

(10) Craig A. Goettsch, Superintendent of Securities, State of Iowa, to Jonathan G. Katz, dated May 3, 1990;

(11) Alain J-M Clenet, President, ASHA Corporation, to Jonathan G. Katz, dated May 4, 1990;

(12) Chester L. F. Paulson, Chairman, Regional Investment Brokers Inc. ("RIBS"), to Jonathan G. Katz, dated May 4, 1990;

(13) Richard W. Hubbard, Securities Commissioner, State of Delaware, to Jonathan G. Katz, dated May 7, 1990;

(14) Richard D. Latham, Securities Commissioner, State of Texas, to Jonathan G. Katz, dated May 8, 1990;

(15) Barry C. Guthary, Director, Commonwealth of Massachusetts, to Jonathan G. Katz, dated May 8, 1990;

(16) Daniel B. Matter, Burns, Wall, Smith and Mueller, P.C., to Jonathan G. Katz, dated May 8, 1990;

(17) Martin E. Marks, President, American Bionetics Inc., to Jonathan G. Katz, dated May 9, 1990;

(18) Christine W. Bender, Commissioner of Corporations, State of California, to Jonathan G. Katz, dated May 9, 1990;

(19) Richard H. Bryan, United States Senator, Nevada, to Jonathan G. Katz, dated May 9, 1990;

(20) Carmine Nuzzi to Jonathan G. Katz, dated May 9, 1990;

(21) Dennis A. Green, Chairman, John L. Watson III, President, Security Traders Association, to Jonathan G. Katz, dated May 9, 1990;

(22) John C. Baldwin, Director, Division of Securities, State of Utah, to Jonathan G. Katz, dated May 9, 1990;

(23) William T. Hart, Hart & Trinen, to Jonathan G. Katz, three letters, dated May 10, September 8, and October 24, 1990 (the October 24, 1990, comment had attached to it a copy of a letter to William T. Hart from Dan Schaefer, U.S. House of Representatives, 6th District, Colorado, which expressed support for the intent of the proposed rule change but objected to raising NASDAQ listing criteria as a means of preventing fraud and increasing investor protection);

(24) John B. Hiatt, Director, Securities Division, State of New Mexico, to Jonathan G. Katz, dated May 10, 1990;

(25) Wayne Klein, Bureau Chief, Securities Bureau, State of Idaho, to Jonathan G. Katz, dated May 10, 1990;

(26) James L. Arnold, General Counsel, Infotechnology, Inc., to Jonathan G. Katz, dated May 11, 1990;

(27) William E. Tabor, President, Tabor Environmental Services, Inc., two letters, to Richard C. Breeden, dated May 11 and June 1, 1990;

(28) Steven L. Diamond, Securities Administrator, State of Maine, to Jonathan G. Katz, dated May 11, 1990;

(29) Marc N. Geman, Executive Vice President and General Counsel, The Stuart-James Co., Inc., to the SEC, dated May 11, 1990;

(30) Joseph Ksanznak to Jonathan G. Katz, dated May 13, 1990;

(31) Kathleen N. Galvin, President, Denver Security Traders Association, to Jonathan G. Katz, dated May 14, 1990;

(32) Martin Donald Pfaff to the Commission, received May 16, 1990;

(33) Michael G. Shreve to Jonathan G. Katz, dated May 16, 1990;

(34) Roy E. Pemberton to Jonathan G. Katz, dated May 23, 1990;

(35) William Reed, Jr. to Jonathan G. Katz, received May 23, 1990;

(36) Bob Cardon, Dynatronics, to Jonathan G. Katz, dated June 4, 1990;

(37) Kent Gerhan to Jonathan G. Katz, received June 19, 1990;

(38) Susan E. Bryant, President, North American Securities Administrators Association, Inc., to Jonathan G. Katz, dated June 26, 1990;

(39) Robert A. Fishman to Jonathan G. Katz, dated July 22, 1990;

(40) Eduardo Morales to Jonathan G. Katz, dated July 27, 1990;

(41) M.B. Merryman, President, MEDI-MAIL, to Jonathan G. Katz, dated August 13, 1990;

(42) Scott H. Hogan, President, Revotek, Inc., to Richard C. Breenden, dated August 15, 1990;

(43) Marc N. Geman, General Counsel, The Stuart-James C., Inc., to the Commission, dated September 20, 1990;

(44) John J. Cox to Jonathan G. Katz, dated October 16, 1990;

(45) Marshall Wolf, Marshall Wolf Investments, to the SEC, dated January 24, 1991;

(46) John Matlick, President and CEO, Nedels Corporation, to Jonathan G. Katz, dated March 13, 1991;

(47) J.W. Linehan, President, Advanced Tobacco Products, Inc., to Jonathan G. Katz, received July 12, 1991; and

(48) Nancy J. Saxman, Corporate Secretary, Biocontrol Technology, Inc., to Jonathan G. Katz, dated July 15, 1991.

[FR Doc. 91-21324 Filed 9-5-91; 8:45 am]

BILLING CODE 8010-01-M

[Release No. 34-29639; File Nos. SR-NSCC-91-01 and SR-PTC-91-09]

Self-Regulatory Organizations; National Securities Clearing Corporation and Participants Trust Company; Order Approving a Proposed Rule Change Relating to the Admission of Participants Trust Company into the Securities Clearing Group

August 30, 1991.

The National Securities Clearing Corporation ("NSCC") and Participant Trust Company ("PTC") filed proposed rule changes (File No. SR-NSCC-91-01 and SR-PTC-91-09) with the Securities and Exchange Commission ("Commission") on January 15, 1991, and June 17, 1991, respectively, pursuant to Section 19(b) of the Securities Exchange Act of 1934 ("Act").[1] Notices of the NSCC and PTC proposals was published, respectively, in the **Federal Register** on February 19, 1991,[2] and on July 17, 1991.[3] No comments were received. This order approves the proposals.

I. Description of the Proposals

The proposed rule changes will permit PTC to join the Securities Clearing Group ("SCG"). SCG is a voluntary association of clearing agency [4] self-regulatory organizations ("SROs") [5] that are registered with the Commission under Section 17A(b) of the Act.[6] SCG was formed in October 1988 by seven clearing agencies for the purpose of engaging in coordinated action to address common issues of the clearance and settlement system.[7] A key goal of SCG is to develop procedures that will help assess the operational and financial conditions of its members' common participants [8] and, in

[1] 15 U.S.C. 78s(b).

[2] Securities Exchange Act Release No. 28872 (February 11, 1991), 56 FR 6696 [File No. SR-NSCC-91-01].

[3] Securities Exchange Act Release No. 29432 (July 10, 1991), 56 FR 32598 [File No. SR-PTC-91-09].

[4] The term "clearing agency" is defined at section 3(a)(23) of the Act, 15 U.S.C. 78c(a)(23).

[5] The term "self-regulatory organization" is defined at section 3(a)(26) of the Act, 15 U.S.C. 78c(a)(26).

[6] 15 U.S.C. 78q-1(b).

[7] Securities Exchange Act Release No. 27044 (July 18, 1989), 54 FR 30963 (order approving SCG).

[8] The term "participant" is defined at section 3(a)(24) of the Act, 15 U.S.C. 78c(a)(24).

The term "common participant" refers to a clearing agency particpant (*i.e.*, a bank or broker-dealer) that is a member of two or more clearing agencies.

particular, to detect conditions that may impose financial risks on SCG members.

All members of the SCG are parties to the SCG Agreement.[9] The SCG members have voted unanimously to allow PTC, a registered clearing agency, to join SCG and have amended the SCG Agreement to that effect.[10] PTC and NSCC believe that PTC's membership in SCG, as a forum for discussing and working cooperatively on clearance and settlement issues, will benefit PTC, its participants, and the other SCG members.

II. Discussion

The Commission believes that the proposals are consistent with the Act and in particular with section 17A of the Act.[11] Section 17A(a)(1)(D) of the Act [12] expressly encourages the linking of clearance and settlement facilities and the development of uniform standards and procedures. Section 17(a)(2) of the Act [13] directs the Commission, having due regard for the public interest, to use its authority to facilitate the establishment of a national system for the prompt and accurate clearance and settlement of securities transactions. Furthermore, section 17A(b)(3)(F) of the Act [14] requires that the rules of a clearing agency be designed to foster cooperation and coordination with persons engaged in the clearance and settlement of securities transactions.

The Commission believes that a nexus exists among SCG member clearing agencies and PTC. This nexus includes: (1) Many common participants, (2) shared operational and financial exposure, and (3) common regulatory responsibilities.[15] The Commission believes that PTC's membership in SCG, which is a formal organization designed to strengthen common regulatory operational, and member monitoring obligations, will further the goals of the National Clearance and Settlement System. The Commission also believes that SCG membership for PTC will improve the clearing agencies' monitoring and communications network and will help them to detect potential defaults by common clearing members in time to minimize related financial loss.

The SCG Agreement was approved by Commission order in July 1989 after extensive analysis.[16] For the reasons discussed in detail in that order, as well as the reasons set forth in this order, the Commission believes that the proposals are consistent with the Act and in particular with Section 17A of the Act.[17]

III. Conclusion

For the reasons discussed above, the Commission finds that the proposals are consistent with the requirements of the Act and the rules and regulations thereunder.

It Is Therefore Ordered, Pursuant to section 19(b(2) of the Act,[18] that the proposed rule changes (File Nos. SR-NSCC-91-01 and SR-PTC-91-09) be, and hereby are, approved.

For the Commission, by the Division of Market Regulation, pursuant to delegated authority.[19]

Margaret H. McFarland,

Deputy Secretary.

[FR Doc. 91-21325 Filed 9-5-91; 8:45 am]

BILLING CODE 8010-01-M

[9] The SCG Agreement is the governing document of SCG. For the original text of the Agreement, see Securities Exchange Act Release No. 26300 (November 21, 1988), 53 FR 48353.

[10] NSCC states in its filing that a meeting held on December 19, 1990, the SCG members voted unanimously to allow PTC to become a party to the SCG Agreement and a member of SCG.

[11] 15 U.S.C. 78q-1.

[12] 15 U.S.C. 78q-1(a)(1)(D)

[13] 15 U.S.C. 78q-1(a)(2).

[14] 15 U.S.C. 78q-1(b)(3)(F).

[15] As part of its rationale for approving the formation of SCG, the Commission stated that it believed a nexus exists among the SCG-clearing agency SROs. *See supra* note 6.

[16] *See supra* note 6.

[17] 15 U.S.C. 78q-1.

[18] 15 U.S.C. 78s(b).

[19] 17 C.F.R. 200.30-3(a)(12).

[Release No. 35-25366]

Filings Under the Public Utility Holding Company Act of 1935 ("Act")

August 30, 1991.

Notice is hereby given that the following filing(s) has/have been made with the Commission pursuant to provisions of the Act and rules promulgated thereunder. All interested persons are referred to the application(s) and/or declaration(s) for complete statements of the proposed transaction(s) summarized below. The application(s) and/or declaration(s) and any amendments thereto is/are available for public inspection through the Commission's Office of Public Reference.

Interested persons wishing to comment or request a hearing on the application(s) and/or declaration(s) should submit their views in writing by September 23, 1991 to the Secretary, Securities and Exchange Commission, Washington, DC 20549, and serve a copy on the relevant applicant(s) and/or declarant(s) at the address(es) specified below. Proof of service (by affidavit or, in case of an attorney at law, by certificate) should be filed with the request. Any request for hearing shall identify specifically the issues of fact or law that are disputed. A person who so requests will be notified of any hearing, if ordered, and will receive a copy of any notice or order issued in the matter. After said date, the application(s) and/or declaration(s), as filed or as amended, may be granted and/or permitted to become effective.

Hope Gas, Inc. (70-7752)

Hope Gas, Inc. ("Hope"), 600 Union National Center West, Clarksburg, West Virginia 26302-2868, a public-utility subsidiary company of Consolidated Natural Gas Company, a registered holding company, has filed an application under section 9(c)(3) of the Act.

Hope Gas proposes to acquire 50% of the limited partnership interests in Avenel Capital (I) Limited Partnership ("Partnership"), a West Virginia limited partnership, for a purchase price of $2 million. The Partnership, which will have a ten year term, intends to qualify as a West Virginia Capital Company under West Virginia law. The West Virginia Capital Company Act provides tax incentives in order to stimulate private investment in West Virginia businesses. The Partnership, which will qualify for $2 million of state tax credits under the statute, intends to satisfy the goals of the statute by making venture capital investments in West Virginia businesses. Hope Gas, as the only West Virginia investor in the Partnership, will be assigned all of the Partnership's state tax credits of $2 million. After accounting for an offset of these credits because of a corresponding increase in federal taxes, and certain other state taxes, Hope Gas would realize net tax savings of approximately $1.3 million.

The general partner of the Partnership will be responsible for the management and investment decisions of the Partnership. Hope Gas' voting power, as a limited partner, will be limited to dissolving the Partnership and amending certain partnership provisions; provided, however, that Hope Gas will have no power to remove the, or elect a new, general partner.

CSW Energy, Inc. et al. (70-7867)

Central and South West Corporation ("CSW"), a registered holding company; its wholly owned nonutility subsidiary, CSW Energy, Inc. ("Energy"); its nonutility subsidiary, CSW Development-I, Inc. ("Energy Sub"), each located at 1616 Woodall Rodgers Freeway, Dallas, Texas, 75202; its nonutility subsidiary, a general partnership, ARK/CSW Development

Partnership ("Joint Venture"), located at 23293 South Pointe Drive, suite 100, Laguna Hills, California 92653; and three proposed entities, Noah I Power Partners, L.P. ("Partnership"), a special purpose limited partnership and subsidiary of Energy Sub, Noah I Power GP, Inc. ("JV Sub"), a corporate subsidiary of Joint Venture, and the Brush Cogeneration Project Partnership ("Project Venture"), a general partnership and subsidiary of the Partnership, each located at 23293 South Pointe Drive, suite 100, Laguna Hills, California 92653, have filed an application-declaration under sections 6(a), 7, 9(a), and 10 and 12(b) of the Act and rules 43, 45, 50(a)(5) and 51 thereunder.

By order, dated October 3, 1990 (HCAR No. 25162), CSW was authorized, among other things, to finance Energy's cogeneration and related activities, through December 31, 1995, in an aggregate amount of up to $75 million, and Energy was authorized to expend $25 million of that amount to form Energy Sub to invest in Joint Venture with ARK Energy, Inc. (ARK"), a nonassociate corporation. Joint Venture was formed as an equal general partnership, which conducts preliminary studies of, consults with respect to, and agrees to construct cogeneration and related projects, except it does not perform consulting services regarding independent power projects.

CSW, Energy, Energy Sub, and Joint Venture now propose to form Partnership and JV Sub, along with ARK, in order to form and invest in Project Venture, which will develop a qualifying cogeneration facility, within the meaning of the Public Utility Regulatory Policies Act of 1978 ("PURPA") and 18 CFR 292.602. The facility is known as the Brush Cogeneration Project ("Project"), which will consist of a 68 megawatt gas fired cogeneration facility and an 18 acre thermal host greenhouse. The assets and related contractual rights ("Assets") of the Project, located near Brush, Colorado in Morgan County, are currently owned by CTI Partners II ("CTI"), a nonassociated Colorado General partnership. Investments in the Project will be made through Project Venture, a joint venture among Energy Sub, ARK, Joint Venture and CTI, as discussed below. The proposed Project Venture will be a Colorado general partnership, which will develop, own and operate the Project.

The proposed Partnership will be organized as a Delaware limited partnership, and its sole general partner will be JV Sub, which will hold a 1% interest in the Partnership. JV Sub will have authorized capital of up to 1,000 shares of common stock, without par value. Joint Venture will subscribe to all of JV Sub's common stock at a subscription price of $1.00 per share. The remaining Partnership interests will be held by Energy Sub and ARK as limited partners, in respective proportional amounts of 95% and 4%.

The proposed Partnership then proposes to acquire a 50% general partnership interest in the Project Venture, under the Partnership Agreement. CTI, or a to-be-formed affiliate of CTI, will acquire the remaining 50% interest as a general partner. In consideration for its interest in Project Venture, the Partnership will make an initial equity capital contribution in the amount of $6 million ("Equity Contribution"). Thereafter, upon commercial operation of the Project, the Partnership will contribute up to 10% of the capital cost of the Project, but not in excess of $7.4 million, as an additional equity contribution ("Additional Equity Contribution"). The total investment by the Partnership in Project Venture, including those of associated companies, will not exceed $13.4 million.

In consideration for its interest, CTI will contribute the Assets, which have a fair market value of approximately $19.4 million to Project Venture. Upon the completion of certain stages in the development of the Project, CTI will receive in the aggregate an amount equal to the Equity Contribution of $6 million from Project Venture. After such payments to CTI, and the payment of certain development costs to both CTI and the Partnership, or their parent organizations, from the proceeds of a proposed construction financing facility ("Facility"), discussed below, their respective capital accounts will be adjusted to $13.4 million.

Project Venture proposes to finance the $80 million estimated cost of construction and development of the Project by: (1) Applying the Partnership's $7.4 million Additional Equity Contribution to the repayment of construction loans under the proposed Facility; and (2) under the terms of the four-part credit Facility, with a bank to be determined ("Bank"), which will provide for the issuance of a letter of credit ("LOC") by the Bank and the issuance of notes by Project Venture in connection with borrowing and reborrowing in aggregate principal amounts not exceeding $74 million in the construction phase and $72.6 million in the permanent financing phase.

Borrowings under the Facility will consist of: (1) Construction loans for up to two years in aggregate principal amounts of up to $74 million; (2) a conversion long-term loan of up to $66.6 million for a term of between approximately 15 years and no more than 18 years, following the application of the $7.4 million Additional Equity Contribution to reduce the construction loans; (3) a $4 million revolving credit arrangement, for a term of between approximately 15 years and no more than 20 years, to be used to satisfy certain working capital and debt service reserve requirements following the construction phase; and (4) an approximately $2 million LOC to be used to satisfy security deposit requirements under the power purchase contracts. Under the terms of the Facility, and any interest rate protection agreement that may be required, the interest cost to Project Venture will not exceed 12% per annum.

Project Venture has requested an exception from the competitive bidding requirements of rules 50(b) and (c) under the Act under rule 50(a)(5) in order to permit it to begin to negotiate the terms and conditions of the proposed Facility. The request was made on the basis that competitive bidding is not feasible or adaptable to this transaction because of the specialized and competitive nature of the current market for this kind of project financing. It may do so.

Finally, CSW proposes to enter into an equity commitment agreement ("Support Agreement") with CTI and the lending banks, whereby CSW will agree to make all equity contributions to Project Venture in the event that the Partnership fails to perform its capital contribution obligations. CSW's obligations under the Support Agreement will not exceed $13.4 million.

For the Commission, by the Division of Investment Management, pursuant to delegated authority.

[FR Doc. 91-21326 Filed 9-5-91; 8:45 am]

BILLING CODE 8010-01-M

SMALL BUSINESS ADMINISTRATION

[Declaration of Disaster Loan Areas #2526 and #2527]

Massachusetts, (With Contiguous Counties in Rhode Island); Declaration of Disaster Loan Area

Barnstable, Bristol, and Plymouth and the contiguous counties of Dukes and Norfolk in the Commonwealth of Massachusetts and Bristol, Newport and Providence counties in the State of Rhode Island constitute a disaster area

as a result of Hurricane Bob which occurred on August 19, 1991. Applications for loans for physical damage as a result of this disaster may be filed until the close of business on October 28, 1991 and for economic injury until the close of business on May 29, 1992 at the address listed below.

Disaster Area 1 Office, Small Business Administration, 360 Rainbow Boulevard South, 3rd floor, Occidental Chemical Center, Niagara Falls, NY 14302 or other locally announced locations.

The interest rates are:

	Percent
For Physical Damage:	
Homeowners With Credit Available Elsewhere	8.000
Homeowners Without Credit Available Elsewhere	4.000
Businesses With Credit Available Elsewhere	8.000
Businesses and Non-Profit Organizations Without Credit Available Elsewhere	4.000
Others (Including Non-Profit Organizations) With Credit Available Elsewhere	9.125
For Economic Injury:	
Businesses and Small Agricultural Cooperatives Without Credit Available Elsewhere	4.000

The numbers assigned to this disaster for physical damage are 252608 for Massachusetts and 252708 for Rhode Island. For economic injury the numbers are 738500 for Massachusetts and 738600 for Rhode Island.

(Catalog of Federal Domestic Assistance Program Nos. 59002 and 59008).

Dated: August 29, 1991.

Patricia Saiki,

Administrator.

[FR Doc. 91-27327 Filed 9-5-91; 8:45 am]

BILLING CODE 8025-01-M

[Declaration of Disaster Loan Areas #2527 and #2526]

Rhode Island, (With Contiguous Counties in Massachusetts); Declaration of Disaster Loan Area

Newport County and the contiguous counties of Bristol, Kent and Washington in the State of Rhode Island and Bristol County in Massachusetts constitute a disaster area as a result of Hurricane Bob which occurred on August 19, 1991. Applications for loans for physical damage as a result of this disaster may be filed until the close of business on October 28, 1991 and for economic injury until the close of business on May 21, 1992 at the address listed below:

Disaster Area 1 Office, Small Business Administration, 360 Rainbow Boulevard South, 3rd floor, Occidental Chemical Center, Niagara Falls, NY 14302 or other locally announced locations.

The interest rates are:

	Percent
For Physical Damage:	
Homeowners with credit available elsewhere	8.000
Homeowners without credit available elsewhere	4.000
Businesses with credit available elsewhere	8.000
Businesses and non-profit organizations without credit available elsewhere	4.000
Others (including non-profit organizations) with credit available elsewhere	9.125
For Economic Injury:	
Businesses and small agricultural cooperatives without credit available elsewhere	4.000

The numbers assigned to this disaster for physical damage are 252708 for Rhode Island and 252608 for Massachusetts. For economic injury the numbers are 738600 for Rhode Island and 738500 for Massachusetts.

(Catalog of Federal Domestic Assistance Program Nos. 59002 and 59008)

Dated: August 29, 1991.

Patricia Saiki,

Administrator.

[FR Doc. 91-21328 Filed 9-5-91; 8:45 am]

BILLING CODE 8025-01-M

DEPARTMENT OF TRANSPORTATION

Federal Aviation Administration

Des Moines International Airport; Des Moines, IA; FAA Approval of Noise Compatibility Program

AGENCY: Federal Aviation Administration, DOT.

ACTION: The Federal Aviation Administration (FAA) announces its findings on the Noise Compatibility Program submitted by the city of Des Moines under the provisions of title I of the Aviation Safety and Noise Abatement Act (ASNA) of 1979 (Public Law 96-193) and 14 CFR part 150. These findings are made in recognition of the description of Federal and nonfederal responsibilities in Senate Report No. 96-52 (1980). On February 1, 1991, the FAA determined that the Noise Exposure Maps submitted by the city of Des Moines under part 150 were in compliance with applicable requirements. On July 30, 1991, the Assistant Administrator approved the Des Moines International Airport Noise Compatibility Program. All of the recommendations of the program were approved.

EFFECTIVE DATE: The effective date of the FAA's approval of the Des Moines International Airport Noise Compatibility Program is July 30, 1991.

FOR FURTHER INFORMATION CONTACT: Dr. John Tatschl, ACE-615B, Federal Aviation Administration, Airports Division, 601 E. 12th St., Kansas City, Missouri 64106. Telephone No. (816) 426-6614. Documents reflecting this FAA action may be obtained from the same individual.

SUPPLEMENTARY INFORMATION: This notice announces that the FAA has given its overall approval to the Noise Compatibility Program for the Des Moines International Airport, effective July 30, 1991.

Under section 104(a) the Aviation Safety and Noise Abatement Act (ASNA) of 1979, an airport operator who has previously submitted a Noise Exposure Map may submit to the FAA a Noise Compatibility Program which sets forth the measures taken or proposed by the airport operator for the reduction of existing noncompatible land uses and prevention of additional noncompatible land uses within the area covered by the Noise Exposure Maps. The Act requires such programs to be developed in consultation with interested and affected parties including local communities, government agencies, airport users, and FAA personnel.

Each airport noise compatibility program developed in accordance with FAR part 150 is a local program, not a Federal program. The FAA does not substitute its judgment for that of the airport proprietor with respect to which measures should be recommended for action. The FAA's approval or disapproval of FAR part 150 program recommendations is measured according to the standards expressed in part 150 and the Aviation Safety and Noise Abatement Act of 1979, and is limited to the following determinations:

a. The noise compatibility program was developed in accordance with the provisions and procedures of FAR part 150;

b. Program measures are reasonably consistent with achieving the goals of reducing existing noncompatible land uses around the airport and preventing the introduction of additional noncompatible land uses;

c. Program measures would not create an undue burden on interstate or foreign commerce, unjustly discriminate against types or classes of aeronautical uses, violate the terms of airport grant agreements, or intrude into areas preempted by the Federal Government;

d. Program measures relating to the use of flight procedures can be implemented within the period covered by the program without derogating safety, adversely affecting the efficient use and management of the navigable Airspace and Air Traffic Control Systems, or adversely affecting other powers and responsibilities of the Administrator prescribed by law.

Specific limitations with respect to FAA's approval of an airport Noise Compatibility Program are delineated in FAR part 150, § 150.5. Approval is not a determination concerning the acceptability of land uses under Federal, state, or local law. Approval does not by itself constitute an FAA implementing action. A request for Federal action or approval to implement specific noise compatibility measures may be required, and an FAA decision on the request may require an environmental assessment of the proposed action. Approval does not constitute a commitment by the FAA to financially assist in the implementation of the program nor a determination that all measures covered by the program are eligible for grant-in-aid funding from the FAA. Where Federal funding is sought, requests for project grants must be submitted to the FAA Regional Office in Kansas City, Missouri.

The city of Des Moines submitted to the FAA on September 11, 1989 the Noise Exposure Maps, descriptions, and other documentation produced during the Noise Compatibility Planning study. The Des Moines International Airport Noise Exposure Maps were determined by FAA to be in compliance with applicable requirements on February 1, 1991. Notice of this determination was published in the **Federal Register** on February 20, 1991.

The Des Moines International Airport study contains a proposed Noise Compatibility Program comprised of actions designed for phased implementation by airport management and adjacent jurisdictions from the date of study completion to beyond the year 1994. It was requested that the FAA evaluate and approve this material as a noise compatibility program as described in section 104(b) of the Act. The FAA began its review of the program on February 1, 1991, and was required by a provision in the Act to approve or disapprove the program within 180 days (other than the use of new flight procedures for noise control.) Failure to approve or disapprove such program within the 180-day period shall be deemed to be an approval of such program.

The submitted program contained 20 proposed actions for noise abatement and mitigation on and off the airport. The FAA completed its review and determined that the procedural and substantive requirements of the Act and FAR part 150 have been satisfied. The overall program, therefore, was approved by the Assistant Administrator effective July 30, 1991.

Outright approval was granted for all of the specific program elements. Some of the noise abatement measures include departure turns, restrictions on early turns, restrictions on Air National Guard flight patterns, restrictions on engine maintenance run-up, established helicopter procedures, relocate Runway 23 threshold, and lengthen Runway 5–23.

These determinations are set forth in detail in a Record of Approval endorsed by the Assistant Administrator on July 30, 1991. The Record of Approval, as well as other evaluation materials and the documents comprising the submittal, are available for review at the FAA office listed above and at the administrative offices for the Des Moines International Airport.

Issued in Kansas City, Missouri, on August 26, 1991.

George A. Hendon,

Manager, Airports Division, Central Region.

[FR Doc. 91–21390 Filed 9–5–91; 8:45 am]

BILLING CODE 6960–01–M

Federal Highway Administration

Environmental Impact Statement: Gaston, Lincoln, and Catawba Counties, NC

AGENCY: Federal Highway Administration (FHWA). DOT.

ACTION: Notice of intent.

SUMMARY: The FHWA is issuing this notice to advise the public that an environmental impact statement will be prepared for a proposed highway project in Gaston, Lincoln and Catawba Counties, North Carolina.

FOR FURTHER INFORMATION CONTACT: Mr. Roy C. Shelton, District Engineer, Federal Highway Administration, P.O. Box 26806, Raleigh, North Carolina 27611, (919) 856–4350.

SUPPLEMENTARY INFORMATION: The FHWA, in cooperation with the North Carolina Department of Transportation (NCDOT), will prepare an environmental impact statement (EIS) on a proposed relocation of NC 16 from Lucia in Gaston County, North Carolina to NC 150 in Catawba County, North Carolina. The proposed action would be the construction of NC 16 as a four-lane limited access highway on new location from the northern terminus of relocated NC 16, north of Lucia, to a point on NC 16 north of NC 150. The proposed highway is considered necessary to handle existing and project traffic demand and to improve a link between Charlotte and Hickory. The proposed action is part of the 1991 Lincoln County Thoroughfare Plan and the 1991 Catawba County Thoroughfare Plan.

Alternatives under consideration include:

1. No-build,

2. Improvement on existing location, and

3. Two build alternatives consisting of a limited access highway on new location.

Letters describing the proposed action and soliciting comments are being sent to appropriate Federal, State and local agencies. A series of public meetings and a public hearing will be held. Public notice will be given of the time and place of the meetings and hearing. The draft EIS will be available for public and agency review and comment at the time of the hearing.

To ensure that the full range of issues related to the proposed action are addressed and all significant issues identified, comments and suggestions are invited from all interested parties. Comments and questions concerning the proposed action should be directed to the FHWA at the address provided above.

(Catalog of Federal Domestic Assistance Program Number 20.205, Highway Research, Planning and Construction. The regulations implementing Executive Order 12372 regarding intergovernmental consultation in Federal Programs and activities apply to this program).

Issued on: August 29, 1991.

Roy C. Shelton,

District Engineer, Raleigh, North Carolina.

[FR Doc. 91–21391 Filed 9–5–91; 8:45 am]

BILLING CODE 4910–22–M

National Highway Traffic Safety Administration

Heavy Truck Safety Plan

AGENCY: National Highway Traffic Safety Administration, DOT.

ACTION: Notice of availability.

SUMMARY: This notice announces the publication of the U.S. Department of

Transportation Heavy Truck Safety Plan. This document was jointly authored by the U.S. Department of Transportation's Federal Highway Administration, National Highway Traffic Safety Administration, and Research and Special Programs Administration. The plan was developed to provide a coordinated program for improving heavy truck safety over the next three years. The document provides an overview of current and future Departmental initiatives for use by government agencies, manufacturers, commercial carriers and drivers, and the public. The document identifies six key areas that the Department has targeted for heavy truck safety improvements: Carrier Operations; Driver Behavior and Qualifications; Vehicle Performance Characteristics; Cargo Handling; Roadway Safety; and Vehicle Condition Data. Individual projects are presented in each of these areas, along with the responsible administration within the Department, proposed future strategies, and key milestone dates. The Department plan also identifies cooperative programs with the public and private sectors to materially reduce the risk and severity of heavy vehicle crashes.

FOR FURTHER INFORMATION CONTACT: Interested persons may obtain a copy of the plan free of charge by sending a self-addressed label to the National Highway Traffic Safety Administration, 400 Seventh Street, S.W., Attention: NAD-51, Washington, D.C. 20590.

Issued September 3, 1991.

Donald C. Bischoff,

Associate Administrator for Plans and Policy.

[FR Doc. 91-21365 Filed 9-5-91; 8:45 am]

BILLING CODE 4910-59-M

Maritime Administration

[Docket S-884]

Sulphur Carriers, Inc.; Application for Temporary Permission Pursuant to Section 805(a) of the Merchant Marine Act, 1936, as amended, and Article II-13 of Waterman Steamship Corporation's Operating-Differential Subsidy Agreement, Contract MA/MSB-450 for Operation of the NORDIC LOUISIANA in the Coastwise Trade of the United States.

Notice is hereby given that Sulphur Carriers, Inc. (SCI), a U.S. corporate affiliate of Waterman Steamship Corporation (Waterman), by letter dated August 29, 1991, requested temporary written permission pursuant to section 805(a) of the Act and Waterman's Operating-Differential Subsidy Agreement (ODSA), Contract MA/MSB-450, to operate the British-built M/V NORDIC LOUISIANA (Vessel), for and on behalf of Freeport-McMoran Resource Partners (Freeport)—a principal phosphate fertilizer producer in the United States—in the coastwise trade of the United States, as authorized by Public Law 102-100. The requested permission is for a period of four years, or until a replacement vessel for the M/V NORDIC LOUISIANA enters service, whichever is sooner.

SCI, pursuant to an agreement it has with Freeport, would operate the Vessel, for and on behalf of Freeport, in accordance with the Congressional provision contained in Public Law 102-100, which authorized its coastwise operation. Under this agreement, the Vessel will engage in transportation of Freeport's proprietary cargo—molten (liquid) sulphur—in the coastwise trade of the United States. The corporate officers of SCI have over 40 years of experience in operating and managing specialized oceangoing vessels, and SCI has available highly-experienced shipping managers and staff. Thus, SCI believes it will be able to insure that Freeport is able to utilize the Vessel most economically and effectively.

Finally, SCI advises that it will function as a discrete corporate entity having segregated financial records and accounts. The operating and management activities of SCI will be entirely separate from and unrelated to the operations of Waterman, and no operating-differential subsidy will be paid or used directly or indirectly for the benefit of SCI.

Any person, firm or corporation having any interest (within the meaning of section 805(a)) in SCI's request and desiring to submit comments concerning the request must by 5 p.m. on Sept. 20, 1991 file written comments in triplicate with the Secretary, Maritime Administration, together with petition for leave to intervene. The petition shall state clearly and concisely the grounds of interest, and the alleged facts relied on for relief.

If no petition for leave to intervene is received within the specified time or if it is determined that petitions filed do not demonstrate sufficient interest to warrant a hearing, the Maritime Administration will take such action as may be deemed appropriate.

In the event petitions regarding the relevant section 805(a) issues are received from parties with standing to be heard, a hearing will be held, the purpose of which will be to receive evidence under section 805(a) relative to whether the proposed operations (a) could result in unfair competition to any person, firm, or corporation operating exclusively in the coastwise or intercoastal service, or (b) would be prejudicial to the objects and policy of the Act relative to domestic trade operations.

(Catalog of Federal Domestic Assistance Program No. 20.804 (Operating-Differential Subsidies)).

By Order of the Maritime Administrator.

Dated: September 4, 1991.

Joel C. Richard,

Acting Secretary, Maritime Administration.

[FR Doc. 91-21525 Filed 9-5-91; 8:45 am]

BILLING CODE 4910-81-M

DEPARTMENT OF THE TREASURY

Office of the Secretary

[Supplement to Department Circular—Public Debt Series—No. 27-91] Treasury Notes, Series AE-1993

Washington, August 28, 1991.

The Secretary announced on August 27, 1991, that the interest rate on the notes designated Series AE-1993, described in Department Circular—Public Debt Series—No. 27-91 dated August 22, 1991, will be 6⅜ percent. Interest on the notes will be payable at the rate of 6⅜ percent per annum.

Gerald Murphy,

Fiscal Assistant Secretary.

[FR Doc. 91-21407 Filed 9-5-91; 8:45 am]

BILLING CODE 4810-40-M

[Supplement to Department Circular—Public Debt Series—No. 28-91] Treasury Notes, Series S-1996

Washington, August 29, 1991.

The Secretary announced on August 28, 1991, that the interest rate on the notes designated Series S-1996, described in Department Circular—Public Debt Series—No. 28-91 dated August 22, 1991, will be 7¼ percent. Interest on the notes will be payable at the rate of 7¼ percent per annum.

Gerald Murphy,

Fiscal Assistant Secretary.

[FR Doc. 91-21408 Filed 9-5-91; 8:45 am]

BILLING CODE 4810-40-M

Public Information Collection Requirements Submitted to OMB for Review

Dated: August 29, 1991.

The Department of Treasury has submitted the following public information collection requirement(s) to OMB for review and clearance under

the Paperwork Reduction Act of 1980, Public Law 96–511. Copies of the submission(s) may be obtained by calling the Treasury Bureau Clearance Officer listed. Comments regarding this information collection should be addressed to the OMB reviewer listed and to the Treasury Department Clearance Officer, Department of the Treasury, room 3171 Treasury Annex, 1500 Pennsylvania Avenue, NW., Washington, DC 20220.

U.S. Customs Service

OMB Number: 1515–0113.
Form Number: CF 1002.
Type of Review: Extension.
Title: Certificate of Payment of Tonnage Tax.
Description: The certificate of Payment of Tonnage Tax is generated by U.S. Customs upon payment of tonnage tax and light money by master of the vessel. It is presented to Customs upon each entry of the vessel during the tonnage year to ensure against overpayment of tonnage taxes.
Respondents: Businesses or other for-profit.
Estimated Number of Recordkeepers: 133,839.
Estimated Burden Hours Per Recordkeeper: 1 minute.
Frequency of Response: On occasion.
Estimated Total Recordkeeping Burden: 3,905 hours.

OMB Number: 1515–0148.
Form Number: CF 331.
Type of Review: Extension.
Title: Manufacturing Drawback Entry and/or Certificate.
Description: The CF 331 serves as an entry, a certificate of manufacture and delivery (or the combination), or a certificate of imported merchandise, necessary in the filing of a claim for a refund of duty and/or Internal Revenue tax paid.
Respondents: Individuals or households, Businesses or other for-profit, Small businesses or organizations.
Estimated Number of Respondents/Recordkeepers: 3,500.
Estimated Burden Hours Per Response/Recordkeeper: 2 hours, 5 minutes.
Frequency of Response: On occasion.
Estimated Total Reporting/Recordkeeping Burden: 124,998 hours.
Clearance Officer: Ralph Meyer (202) 566–4019, U.S. Customs Service, Paperwork Management Branch, room 6316, 1301 Constitution Avenue, NW., Washington, DC 20229.
OMB Reviewer: Milo Sunderhauf (202) 395–6880, Office of Management and Budget, room 3001, New Executive Office Building, Washington, DC 20503.

Lois K. Holland,
Departmental Reports, Management Officer.
[FR Doc. 91–21317 Filed 9–5–91; 8:45 am]
BILLING CODE 4820–02–M

Public Information Collection Requirements Submitted to OMB for Review

Dated: August 29, 1991.

The Department of Treasury has made revisions and resubmitted the following public information collection requirement(s) to OMB for review and clearance under the Paperwork Reduction Act of 1980, Public Law 96–511. Copies of the submission(s) may be obtained by calling the Treasury Bureau Clearance Officer listed. Comments regarding this information collection should be addressed to the OMB reviewer listed and to the Treasury Department Clearance Officer, Department of the Treasury, room 3171 Treasury Annex, 1500 Pennsylvania Avenue, NW., Washington, DC 20220.

Internal Revenue Service

OMB Number: 1545–0162.
Form Number: IRS Form 4136.
Type of Revenue: Resubmission.
Title: Credit for Federal Tax on Fuels.
Description: Internal Revenue Code (IRC) section 34 allows a credit for Federal excise tax for certain fuels uses. This form is used to figure the amount of income tax credit. Data is used to verify the validity of the claims for the type of use.
Respondents: Individuals of households, Farms, Businesses or other for-profit, Small businesses or organizations.
Estimated Number of Respondents/Recordkeepers: 910,000.
Estimated Burden Hours Per Respondents/Recordkeeper:
Recordkeeping—7 hours, 10 minutes
Learning about the law or the form—6 minutes
Preparing and sending the form to the IRS—13 minutes
Frequency of Response: Annually.
Estimated Total Reporting/Recordkeeping Burden: 7,480,200 hours.
Clearance Officer: Garrick Shear (202) 535–4297, Internal Revenue Service, room 5571, 1111 Constitution Avenue, NW., Washington, DC 20224.
OMB Reviewer: Milo Sunderhauf (202) 395–6880, Office of Management and Budget, room 3001, New Executive Office Building, Washington, DC 20503.

Lois K. Holland,
Departmental Reports Management Officer.
[FR Doc. 91–21318 Filed 9–5–91; 8:45 am]
BILLING CODE 4830–01–M

RESOLUTION TRUST CORPORATION

Coastal Barrier Improvement Act; Property Availability; Condo I, Vilas County, WI

AGENCY: Resolution Trust Corporation.

ACTION: Notice.

SUMMARY: Notice is hereby given that the property known as Condo I located in Vilas County, Wisconsin is affected by section 10 of the Coastal Barrier Improvement Act of 1990, as specified below.

DATES: Written notices of serious interest to purchase or effect other transfer of the property may be mailed or faxed to the RTC until December 5, 1991.

ADDRESSES: Copies of detailed descriptions of the property, including maps, can be obtained from or are available for inspection by contacting the following person: Lee Stedman, Resolution Trust Corporation, Minneapolis Consolidated Office, 3400 Yankee Drive, 4th Floor, Eagan, MN 55122, (612) 683–4567, Fax (612) 683–4580.

SUPPLEMENTARY INFORMATION: The property is located just off of and north of Highway 70 south of Phelps, in Vilas County, Wisconsin, The property is adjacent to the Nicolet National Forest. The property is covered property within the meaning of Section 10 of the Coastal Barrier Improvement Act of 1990, Public Law 101–591 (12 U.S.C. 1441a–3).

Characteristics of the property include: The property is located south of the community of Phelps in North Central Wisconsin and is accessible from Kentuck Lake Road north of Highway 70. The property is approximately 88.22 acres of vacant recreational land with 4,400 feet of frontage on Spectacle Lake. The property is west of and shares a common boundary with the Nicolet National Forest. The property has been subdivided into 29 lots, 25 of which have lake frontage. Most of the property is forested and there are areas of small swamps and bogs.

Property size: Approximately 88.22 acres.

Written notice of serious interest in the purchase or other transfer of the

property must be received on or before December 5, 1991 by the Resolution Trust Corporation at the address stated above.

Those entities eligible to submit written notices of serious interest are:

1. Agencies or entities of the Federal government;

2. Agencies or entities of State or local government; and

3. "Qualified organizations" pursuant to section 170(h)(3) of the Internal Revenue Code of 1986 (26 U.S.C. 170(h)(3)).

Written notices of serious interest to purchase or effect other transfer of the property must be submitted by December 5, 1991 to Lee Stedman at the above **"ADDRESSES"** and in the following form:

Notice of Serious Interest

RE: Condo I

Federal Register Publication Date: _____

1. Entity name.

2. Declaration of eligibility to submit Notice under criteria set forth in Coastal Barrier Improvement Act of 1990, Public Law 101-591, section 10(b)(2), (12 U.S.C. 1441a-3(b)(2)).

3. Brief description of proposed terms of purchase or other offer (e.g., price and method of financing).

4. Declaration by entity that it intends to use the property primarily for wildlife refuge, sanctuary, open space, recreational, historical, cultural, or natural resource conservation purposes.

5. Authorized Representative (Name/Address/Telephone/Fax).

Dated: August 30, 1991.

Resolution Trust Corporation.

John M. Buckley, Jr.,

Executive Secretary.

[FR Doc. 91-21314 Filed 9-5-91; 8:45 am]

BILLING CODE 6714-01-M

Coastal Barrier Improvement Act; Property Availability; Estrella/Hidden Valley, Maricopa County, AZ

AGENCY: Resolution Trust Corporation.

ACTION: Notice.

SUMMARY: Notice is hereby given that the property known as Estrella/Hidden Valley located in Maricopa County, Arizona, is affected by Section 10 of the Coastal Barrier Improvement Act of 1990, as specified below.

DATES: Written notices of serious interest to purchase or effect other transfer of the property may be mailed or faxed to the RTC until December 5, 1991.

ADDRESSES: Copies of detailed descriptions of the property, including maps, can be obtained from or are available for inspection by contacting the following person: Joanne Burroughs, Resolution Trust Corporation, Central Western Consolidated Office, 2910 North 44th Street, Phoenix, AX 85018, (602) 381-3460, Fax (602) 954-9549.

SUPPLEMENTARY INFORMATION: The property is located approximately four miles south of the City of Goodyear and approximately fifteen miles southwest of the Phoenix metropolitan area off of Interstate Highway 10 (I-10) on Estrella Boulevard, Maricopa County, Arizona.

The property subject to this notice consists of the combination of the Hidden Valley parcel and Phase II & III Estrella. The eastern boundary of the Phase II portion of Estrella abuts the Estrella Mountain Regional Park which is owned and managed by Maricopa County. The property is covered property within the meaning of Section 10 of the Coastal Barrier Improvement Act of 1990, Public Law 101-591 (12 U.S.C. 1441a-3).

Characteristics of the property include: The property consists of a total of approximately 14,440.87 acres. Phase II and Phase III of the Estrella portion of the property consists of approximately 5,788.19 acres. The Hidden Valley portion of the property consists of approximately 8,652.68 acres and boarders the southern boundary of Phase II of Estrella. The property consists of undeveloped land, undisturbed Sonoran Desert, vacant or retired agricultural land, and some agricultural land planted to alfalfa and cotton. The property abuts the Estrella Mountain Regional Park and is adjacent to other State-owned lands. Additional features include riparian corridors where wildlife values are the greatest and the occurrence of the federally endangered Desert tortoise.

Property size: Approximately 14,440.87 acres.

Written notice of serious interest in the purchase or other transfer of the property must be received on or before December 5, 1991 by the Resolution Trust Corporation at the address stated above.

Those entities eligible to submit written notices of serious interest are:

1. Agencies or entities of the Federal government;

2. Agencies or entities of State or local government; and

3. "Qualified organizations" pursuant to section 170(h)(3) of the Internal Revenue Code of 1986 (26 U.S.C. 170(h)(3)).

Written notices of serious interest to purchase or effect other transfer of the property must be submitted by December 5, 1991 to Joanne Burroughs at the above **"ADDRESSES"** and in the following form:

Notice of Serious Interest

RE: Estrella/Hidden Valley

Federal Register Publication Date: _____

1. Entity name.

2. Declaration of eligibility to submit Notice under criteria set forth in Coastal Barrier Improvement Act of 1990, Public Law 101-591, section 10(b)(2), (12 U.S.C. 1441a-3(b)(2)).

3. Brief description of proposed terms of purchase or other offer (e.g., price and method of financing).

4. Declaration by entity that it intends to use the property primarily for wildlife refuge, sanctuary, open space, recreational, historical, cultural, or natural resource conservation purposes.

5. Authorized Representative (Name/Address/Telephone/Fax).

Dated: August 30, 1991.

Resolution Trust Corporation.

John M. Buckley, Jr.,

Executive Secretary.

[FR Doc. 91-21315 Filed 9-5-91; 8:45 am]

BILLING CODE 6714-01-M

Coastal Barrier Improvement Act; Property Availability; Mariner Saudi Joint Venture, Baldwin County, AL

AGENCY: Resolution Trust Corporation.

ACTION: Notice.

SUMMARY: Notice is hereby given that the property known as the Mariner Saudi Joint Venture located in Baldwin County, Alabama, is affected by section 10 of the Coastal Barrier Improvement Act of 1990, as specified below.

DATES: Written notices of serious interest to purchase or effect other transfer of the property may be mailed or faxed to the RTC until December 5, 1991.

ADDRESSES: Copies of detailed descriptions of the property, including maps, can be obtained from or are available for inspection by contacting the following person: Bill Ruff, Resolution Trust Corporation, Mid-Atlantic Consolidated Office, 100 Colony Square, suite 2300, Atlanta, GA 30361, (404) 881-5059, Fax (404) 881-4995.

SUPPLEMENTARY INFORMATION: The property is located on the Fort Morgan Peninsula near the community of Gulf Shores and off of Fort Morgan Road (Highway 180) approximately 8 miles west of Highway 59, Baldwin County, Alabama. The entire property is within the authorized acquisition boundary for the Bon Secour National Wildlife Refuge and near land that has been purchased for the Refuge. The peroperty is affected by section 10 of the Coastal Barrier

Improvement Act of 1990, Public Law 101–591 (12 U.S.C. 1441a–3).

Characteristics of the property incude: The property consists of approximately 134 acres of undeveloped land which includes primary coastal dunes along the Gulf of Mexico. The primary dunes on the property are designated Critical Habitat for the federally-endangered Alabama beach mouse. The site is subject to flooding and includes approximately 33 acres of interdunal wetlands which provide important areas for a variety of migratory birds.

Property size: Approximately 134 acres.

Written notice of serious interest in the purchase or other transfer of the property must be received on or before December 5, 1991 by the Resolution Trust Corporation at the address stated above.

Those entities eligible to submit writen notices of serious interest are:

1. Agencies or entities of the Federal government;

2. Agencies or entities of State or local government; and

3. "Qualified organizations" pursuant to section 170(h)(3) of the Internal Revenue Code of 1986 (26 U.S.C. 170(h)(3)).

Written notices of serious interest to purchase or effect other transfer of the property must be submitted by December 5, 1991 to Bill Ruff at the above "**ADDRESSES**" and in the following form:

Notice of Serious Interest

Re: Mariner Saudi Joint Venture

Federal Register Publication Date: _____

1. Entity name.

2. Declaration of eligibility to submit Notice under criteria set forth in Coastal Barrier Improvement Act of 1990, Public Law 101–591, section 10(b)(2), (12 U.S.C. 1441a–3(b)(2)).

3. Brief description of proposed terms of purchase or other offer (e g., price and method of financing).

4. Declaration by entity that it intends to use the property primarily for wildlife refuge, sanctuary, open space, recreational, historical, cultural, or natural resource conservation purposes.

5. Authorized Representative (Name/Address/Telephone/Fax).

Dated: August 30, 1991.

Resolution Trust Corporation.

John M. Buckley, Jr.,

Executive Secretary.

[FR Doc. 91–21316 Filed 9–5–91; 8:45 am]

BILLING CODE 6714–01–M

Sunshine Act Meetings

Federal Register
Vol. 56, No. 173
Friday, September 6, 1991

This section of the FEDERAL REGISTER contains notices of meetings published under the "Government in the Sunshine Act" (Pub. L. 94-409) 5 U.S.C. 552b(e)(3).

COMMISSION ON CIVIL RIGHTS

September 4, 1991.

DATE AND TIME: Friday, September 13, 1991, 9:00 a.m.–2:00 p.m.

PLACE: U.S. Commission on Civil Rights, 1121 Vermont Avenue, NW., Room 512, Washington, D.C. 20425.

STATUS: Open to the public.

Friday, September 13, 1991

I. Approval of Agenda
II. Approval of Minutes of July Meeting
III. Announcements
IV. Appointments for the New Hampshire Advisory Committee and interim appointments for the North Carolina and Vermont Advisory Committees
V. *Police Community Relations in Tampa* (Florida)
VI. Staff Director's Report
VII. Future Agenda Items

CONTACT PERSON FOR FURTHER INFORMATION: Barbara Brooks, Press and Communications, (202) 376–8312.

Emma Monroig,
Solicitor.

[FR Doc. 91–21512 Filed 9–4–91; 11:44 am]

BILLING CODE 6335-01-M

EQUAL EMPLOYMENT OPPORTUNITY COMMISSION

DATE AND TIME: 2:00 p.m. (Eastern Time) Tuesday, September 17, 1991.

PLACE: Conference Room on the Ninth Floor of the EEOC Office Building, 1801 L Street NW., Washington, DC 20507.

STATUS: Part of the Meeting will be Open to the Public and Part will be Closed to the Public.

MATTER TO BE CONSIDERED:

Open Session

1. Announcement of Notation Vote(s).
2. A Report on Commission Operations.

Closed Session

1. Litigation Authorization: General Counsel Recommendations.
2. Agency Adjudication and Determination on the Record of Federal Agency Discrimination Complaint Appeals.

Note: Any matter not discussed or concluded may be carried over to a later meeting. (In addition to publishing notices on EEOC Commission meetings in the *Federal Register*, the Commission also provides a recorded announcement a full week in advance on future Commission sessions. Please telephone (202) 663–7100 (voice) and (202) 663–4494 (TTD) at any time for information on these meetings.)

CONTACT PERSON FOR MORE INFORMATION: Frances M. Hart, Executive Officer on (202) 663–7100.

This Notice Issued September 4, 1991.

Frances M. Hart,
Executive Officer, Executive Secretariat.

[FR Doc. 91–21576 Filed 9–4–91; 4:02 pm]

BILLING CODE 6750-06-M

FEDERAL DEPOSIT INSURANCE CORPORATION

Notice of Agency Meeting

Pursuant to the provisions of the "Government in the Sunshine Act" (5 U.S.C. 552b), notice is hereby given that the Federal Deposit Insurance Corporation's Board of Directors will meet in open session at 2:00 p.m. on Tuesday, September 10, 1991, to consider the following matters:

Summary Agenda

No substantive discussion of the following items is anticipated. These matters will be resolved with a single vote unless a member of the Board of Directors requests that an item be moved to the discussion agenda.

Disposition of minutes of previous meetings.

Reports of actions approved by the standing committees of the Corporation and by officers of the Corporation pursuant to authority delegated by the Board of Directors.

Corporation Status Report—For the Six Months Ended June 30, 1991.

Memorandum re: Request for Approval—On-site Banyan Support.

Memorandum re: Authority to execute agreement with the Internal Revenue Service concerning consolidated income tax refunds.

Discussion Agenda

Memorandum and resolution re: Proposed amendments to Part 323 of the Corporation's rules and regulations, entitled "Appraisals," which would (1) eliminate the requirement for regulated institutions to obtain appraisals by certified or licensed appraisers for real estate-related financial transactions having a value, as defined in the rule, of $100,000 or less; (2) permit regulated institutions to use appraisals prepared for loans insured or guaranteed by an agency of the federal government if the appraisal conforms to the requirements of the federal insurer or guarantor; and (3) add a definition of "real estate" and "real property" to clarify that the appraisal regulation does not apply to mineral rights, timber rights, or growing crops.

The meeting will be held in the Board Room on the sixth floor of the FDIC Building located at 550-17th Street, NW., Washington, DC.

Requests for further information concerning the meeting may be directed to Mr. Hoyle L. Robinson, Executive Secretary of the Corporation, at (202) 898-6757.

Dated: September 3, 1991.
Federal Deposit Insurance Corporation.

Hoyle L. Robinson,
Executive Secretary.

[FR Doc. 91–21475 Filed 9–3–91; 8:45 am]

BILLING CODE 6714-01-M

FEDERAL DEPOSIT INSURANCE CORPORATION

Notice of Agency Meeting

Pursuant to the provisions of the "Government in the Sunshine Act" (5 U.S.C. 552b), notice is hereby given that at 3:00 p.m. on Tuesday, September 10, 1991, the Federal Deposit Insurance Corporation's Board of Directors will meet in closed session, by vote of the Board of Directors, pursuant to sections 552b(c)(2), (c)(4), (c)(6), (c)(8), (c)(9)(A)(ii), (c)(9)(B), and (c)(10) of Title 5, United States Code, to consider the following matters:

Summary Agenda:

No substantive discussion of the following items is anticipated. These matters will be resolved with a single vote unless a member of the Board of Directors requests that an item be moved to the discussion agenda.

Application for Consent to Merge and Establish a Branch:

Team Bank, Forth Worth, Texas, an insured State nonmember bank, for the Corporation's consent to merge, under its charter and title, with First National Bank, Fredericksburg, Texas, and for consent to establish the sole office of First National Bank as a branch of the resultant bank.

Recommendations with respect to the initiation, termination, or conduct of administrative enforcement proceedings (cease-and-desist proceedings, termination-of-insurance proceedings, suspension or removal proceedings, or assessment of civil money penalties) against certain insured depository institutions or officers, directors, employees, agents or other persons participating in the conduct of the affairs thereof:

Names of persons and names and locations of depository institutions authorized to be exempt from disclosure pursuant to the provisions of subsections (c)(6), (c)(8), and (c)(9)(A)(ii) of the "Government in the Sunshine Act" (5 U.S.C. 552b(c)(6), (c)(8), and (c)(9)(A)(ii)).

Note: Some matters falling within this category may be placed on the discussion agenda without further public notice if it becomes likely that substantive discussion of those matters will occur at the meeting.

Recommendations regarding the liquidation of depository institutions' assets acquired by the Corporation in its capacity as receiver, liquidator, or liquidating agent of those assets:

Case No. 47,730
Various Banks and Savings and Loans, Nationwide
Case No. 47,735
American Diversified Savings Bank, Costa Mesa, California

Reports of the Office of Inspector General:

Audit Report re:
Americity Federal Savings Bank Dallas, Texas, Case Number: SW-018c (Memo dated July 14, 1991)
Audit Report re:
First Gibraltar Bank, FSB Dallas Texas, Case Number: SW-021c (Memo dated July 30, 1991)
Audit Report re:
MeraBank Texas, F.S.B., El Paso, Texas, Case Number: SW-003c/006c (Memo dated July 16, 1991)
Audit Report re:
O'Hare Consolidated Office, Cost Center 201 (Memo dated August 2, 1991)
Audit Report re:
Inventory Closing Procedures, Midland Consolidated Office (Memo dated July 28, 1991)
Audit Report re:
Audit of Asset Management Contractor, Eastdil Realty, Inc. (Memo dated August 14, 1991)
Audit Report re:
Audit of Asset Management Contractor, First Gibraltar Bank, FSB, Dallas, Texas (Memo dated July 31, 1991)
Audit Report re:
Audit of Asset Management Contractor, Sunbelt Savings, F.S.B., Dallas, Texas (Memo dated July 24, 1991)
Audit Report re:
Information System Audit Report, Denver Consolidated Office, Cost Center 603 (Memo dated August 16, 1991)
Audit Report re:
Information System Audit Report, San Antonio Consolidated Office, Cost Center 407 (Memo dated August 7, 1991)
Audit Report re:
Audit of the Management and Control of Owned Real Estate, Anchorage Consolidated Office (Memo dated August 7, 1991)
Audit Report re:
Audit of the FDIC Fund Allocation System (Memo dated August 16, 1991)
Audit Report re:
Audit of Legal Expenses Paid Under Contract No. C-88225 (Memo dated July 19, 1991)
Audit Report re:
Audit of the Denver Consolidated Office's Division of Liquidation, Time and Attendance Operations (Memo dated July 16, 1991)
Audit Report re:
Audit of the Denver Consolidated Office's Legal Division, Time and Attendance Operations (Memo dated July 16, 1991)

Discussion Agenda

Recommendation regarding the liquidation of a depository institution's assets acquired by the Corporation in its capacity as receiver, liquidator, or liquidating agent of those assets:

Case No. 47,721
The National Bank of Washington, Washington, D.C.

Matters relating to an assistance agreement with an insured institution.

Matters relating to the disclosure of confidential information.

Personnel actions regarding appointments, promotions, administrative pay increases, reassignments, retirements, separations, removal, etc.:

Names of employees authorized to be exempt from disclosure pursuant to the provisions of subsections (c)(2) and (c)(6) of the "Government in the Sunshine Act" (5 U.S.C. 552b(c)(2) and (c)(6)).

Matters relating to the possible closing of certain insured banks:

Names and locations of banks authorized to be exempt from disclosure pursuant to the provisions of subsections (c)(8), (c)(9)(A)(ii), and (c)(9)(B) of the "Government in the Sunshine Act" (5 U.S.C. 552b(c)(8), (c)(9)(A)(ii), and (c)(9)(B)).

The meeting will be held in the Board Room on the sixth floor of the FDIC Building located at 550-17th Street, N.W., Washington, D.C.

Requests for further information concerning the meeting may be directed to Mr. Hoyle L. Robinson, Executive Secretary of the Corporation, at (202) 898-6757.

Dated: September 3, 1991.

Federal Deposit Insurance Corporation.

Hoyle L. Robinson,

Executive Secretary.

[FR Doc. 91-21476 Filed 9-3-91; 4:49 pm]

BILLING CODE 6714-01-M

BOARD OF GOVERNORS OF THE FEDERAL RESERVE SYSTEM

"FEDERAL REGISTER" CITATION OF PREVIOUS ANNOUNCEMENT: 56 FR 42378, August 27, 1991.

PREVIOUSLY ANNOUNCED TIME AND DATE OF THE MEETING: 11:00 a.m., Tuesday, September 3, 1991.

CHANGES IN THE MEETING: One of the items announced for inclusion at this meeting was consideration of any agenda items carried forward from a previous meeting; the following such closed item(s) was added: Proposal to revise the Federal Reserve's policy regarding borrowing by examiners. (This matter was previously announced for a closed meeting on August 14, 1991.)

CONTACT PERSON FOR MORE INFORMATION: Mr. Joseph R. Coyne, Assistant to the Board; (202) 452-3204.

Dated: September 3, 1991.

Jennifer J. Johnson,

Associate Secretary of the Board.

[FR Doc. 91-21452 Filed 9-3-91; 4:40 pm]

BILLING CODE 6210-01-M

BOARD OF GOVERNORS OF THE FEDERAL RESERVE SYSTEM

TIME AND DATE: 10:00 a.m., Wednesday, September 11, 1991.

PLACE: Marriner S. Eccles Federal Reserve Board Building, C Street entrance between 20th and 21st Streets, N.W., Washington, D.C. 20551.

STATUS: Closed.

MATTERS TO BE CONSIDERED:

1. Personnel actions (appointments, promotions, assignments, reassignments, and salary actions) involving individual Federal Reserve System employees.
2. Any items carried forward from a previously announced meeting.

CONTACT PERSON FOR MORE INFORMATION: Mr. Joseph R. Coyne, Assistant to the Board; (202) 452-3204. You may call (202) 452-3207, beginning at approximately 5 p.m. two business days before this meeting, for a recorded announcement of bank and bank holding company applications scheduled for the meeting.

Dated: September 3, 1991.

Jennifer J. Johnson,

Associate Secretary of the Board.

[FR Doc. 91-21453 Filed 9-3-91; 4:40 pm]

BILLING CODE 6210-01-M

LEGAL SERVICES CORPORATION

BOARD OF DIRECTORS MEETING; NOTICE

TIME AND DATE: A meeting of the Board of Directors will be held on September 15-16, 1991. The meeting will commence at 1:00 p.m. on September 15, 1991 and at 9:00 a.m. on September 16, 1991.

PLACE: The Ramada Renaissance Hotel, 1001 County Line Road, The Ballroom, Jackson, Mississippi 39211
(601) 957-2800
1-800-227-5489 (Reservations)
1-800-228-9898 (Reservations)

STATUS OF MEETING: Open, except that a portion of the meeting will be closed pursuant to (1) a majority vote taken in open session during the August 12, 1991 meeting of the Board of Directors and (2) a supplemental vote taken by telephone on August 26–28, 1991, during which the specific information contained herein was provided to the members of the Board of Directors. At the closed session, the Board of Directors will hear and consider the report of the General Counsel on litigation to which the Corporation is a party, and will consider pending personnel actions and personnel-related rules and practices, including matters related to current investigations being undertaken by the Corporation's Office of the Inspector General. The Board of Directors will also receive a report on current investigations from the Inspector General. In addition, the Board of Directors will consider matters related to the resignation of the incumbent president and recruitment of a new president for the Legal Services Corporation. A portion of the meeting may be closed pursuant to a vote of the Board of Directors, which will be taken in open session, to discuss Agenda items numbered 10 and 12 herein. The closing is authorized by the relevant sections of the Government in the Sunshine Act [5 U.S.C. Sections 552b (c) (2), (6), and (10)], and the corresponding regulation of the Legal Services Corporation [45 C.F.R. Sections 1622.5(a), (e), and (h)]. The closing pursuant to the August 12, 1991 and August 26–28, 1991 votes has been certified by the Corporation's General Counsel as authorized by the above-cited provisions of law. Discussion of Agenda items numbered 10 and 12 in closed session is contingent upon a majority vote of the Board of Directors at its September 15–16, 1991 meeting. The Corporation's General Counsel has certified that the matters described in Agenda items numbered 10 and 12 may be discussed in closed session by the Board of Directors as authorized by the above-cited provisions of law. A copy of the General Counsel's certification is posted for public inspection at the Corporation's headquarters, located at 400 Virginia Avenue, SW., Washington, DC, 20024, in its three reception areas, and is otherwise available upon request.

VOTE TO CLOSE:

VOTE OF AUGUST 12, 1991

Board Member	Vote
Howard Dana, Jr	Yes.
Luis Guinot, Jr	(Absent).

VOTE OF AUGUST 12, 1991—Continued

Board Member	Vote
J. Blakeley Hall	Yes.
William Kirk, Jr	Yes.
Jo Betts Love	Yes.
Guy Molinari	(Absent).
Penny Pullen	Yes.
Thomas Rath	(Absent).
Basile Uddo	Yes.
George Wittgraf	Yes.
Jeanine Wolbeck	Yes.

VOTE OF AUGUST 26–28, 1991

Board Member	Vote
Howard Dana, Jr	Yes.
J. Blakeley Hall	Yes.
William Kirk, Jr	Yes.
Jo Betts Love	Yes.
Guy Molinari	Yes.
Penny Pullen	Yes.
Thomas Rath	Yes.
Basile Uddo	Yes.
George Wittgraf	Yes.
Jeanine Wolbeck	Yes.

MATTERS TO BE CONSIDERED:

Sunday, September 15, 1991

Open Session

1. Approval of Agenda.
2. Approval of Minutes of August 12, 1991 Meeting.
3. Chairman's Report.
4. President's Report.
5. Legislative Report.
6. Inspector General's Report.
7. Consideration of Supplemental Report on the Competition Study.

Monday, September 16, 1991

Open Session (Cont.)

8. Consideration of Report by Audit and Appropriations Committee.
9. Consideration of and Vote to Close the Portion of the September 16, 1991 Meeting at which the Board of Directors will Discuss Agenda Items 10 and 12 as Described Herein.
10. Hear and Consider the Report of the Presidential Search Committee on Individual(s) Recommended to Serve as Interim President of the Legal Services Corporation.

Closed Session

11. Consideration of Report by Inspector General on Current Investigations and Other Matters.
12. Consider Qualifications of Individual(s) and Possibly Select an Individual to Serve as Interim President of the Legal Services Corporation.
13. Consideration of Pending Personnel Actions and Personnel-Related Rules and Practices, and Consultation with Board's Special Counsel.
14. Hear and Consider the General Counsel's Report on Pending Litigation to which the Corporation is a Party.

Open Session

Monday, September 16, 1991 (Continued)

15. Receipt of Letter of Resignation from the President of the Legal Services Corporation.
16. Hear and Consider the Report of the Presidential Search Committee on the Organization and Development of a Presidential Search Procedure.
17. Consideration of and, if necessary, Vote on Closure of a Portion of the November 18, 1991 Meeting of the Board of Directors.

CONTACT PERSON FOR INFORMATION: Patricia D. Batie, Executive Office, (202) 863–1839.

Date Issued: September 4, 1991.

Patricia D. Batie,

Corporate Secretary.

[FR Doc. 91–21569 Filed 9–4–91; 3:44 pm]

BILLING CODE 7050-01-M

RESOLUTION TRUST CORPORATION

Notice of Agency Meeting

Pursuant to the provisions of the "Government in the Sunshine Act" (5 U.S.C. 552b), notice is hereby given that the Board of Directors of the Resolution Trust Corporation will meet in open session following the FDIC open session that begins at 2:00 p.m. on Tuesday, September 10, 1991 to consider the following matters:

Summary Agenda

No substantive discussion of the following items is anticipated. These matters will be resolved with a single vote unless a member of the Board of Directors requests that an item be moved to the discussion agenda.

- Quarterly Reports of Actions Taken Under Delegated Authority by the Resolution Trust Corporation Committee on Management and Disposition of Assets and the Resolution Trust Committee Senior Committee on Management and Disposition of Assets, October 1, 1990–December 31, 1990, and January 1, 1991–March 31, 1991.
- Disposition of minutes of previous meetings.
- Memorandum re:
  Proposed Amendment to the Appraisals Regulation

Discussion Agenda

- Memorandum re:
  Master Resolution for Mortgage Securitization Transactions
- Memorandum re:
  Proposed Statement of Policy Providing for Confidential Treatment of Proprietary Information Obtained in Connection with RTC's Renegotiation Efforts

The meeting will be held in the Board Room on the sixth floor of the FDIC Building located at 550–17th Street, N.W., Washington, D.C.

Requests for further information concerning the meeting may be directed to Mr. John M. Buckley, Jr., Executive Secretary of the Resolution Trust Corporation, at (202) 416–7282.

Dated: September 4, 1991.

Resolution Trust Corporation.

John M. Buckley, Jr.,

Executive Secretary.

[FR Doc. 91–21565 Filed 9–4–91; 3:20 pm]

BILLING CODE 6714–01–M

TENNESSEE VALLEY AUTHORITY

[Meeting No. 1442]

TIME AND DATE: 10 a.m. (EDT), September 10, 1991.

PLACE: Chattanooga Office Complex Auditorium, Chattanooga, Tennessee.

STATUS: Open.

Agenda

Approval of minutes of meeting held on August 19, 1991.

Action Items

New Business

A—Budget and Financing

A1. Fiscal Year 1992 Capital Budget Financed from Power Proceeds and Borrowings.

A2. Fiscal Year 1992 Operating Budget Financed from Power System Revenue.

A3. Short-term Borrowing from the Treasury.

A4. Section 13 Payments in Lieu of Taxes, Fiscal Year 1990.

B—Purchase Awards

B1. Systems Contract for Accelerated Delivery Schedule for Microcomputers and Related Items for Information Services (Request for Proposal YE–93900C).

C—Power

C1. Changes in Dispersed Power Production Guidelines.

E—Real Property Transactions

E1. Grant of Permanent Easement Affecting Approximately 0.20 Acre of Watts Bar Reservoir Land in Roane County, Tennessee.

F—Unclassified

F1. Supplement to Personal Services Contract No. TV–81877V with Robert L. Cloud Associates, Inc.

F2. Supplement to Personal Services Contract No. TV–83455V with Cygna Group.

F3. Supplement to Personal Services Contract No. TV–73026A with PRC Engineering Systems, Inc.

F4. Supplement to Personal Services Contract No. TV–85432 with Performance Controls Company.

F5. Supplement to Personal Services Contract No. TV–83216V with BGP Technical Services, Inc.

F6. Filing of Condemnation Cases.

F7. TVA Contribution to the TVA Retirement System for Fiscal Year 1992.

Information Item

1. Supplement to Personal Services Contract No. TV–82909V with B&W Nuclear Service Company.

2. Memorandum of Understanding with the Appalachian Regional Commission.

CONTACT PERSON FOR MORE INFORMATION: Alan Carmichael, Manager, Media Relations, or a member of his staff can respond to requests for information about this meeting. Call (615) 632–6000, Knoxville, Tennessee. Information is also available at TVA's Washington Office (202) 479–4412.

Dated: September 3, 1991.

William L. Osteen, Jr.,

Associate General Counsel and Assistant Secretary.

[FR Doc. 91–21484 Filed 9–4–91; 10:30 am]

BILLING CODE 8120–08–M

Corrections

Federal Register
Vol. 56, No. 173
Friday, September 6, 1991

This section of the FEDERAL REGISTER contains editorial corrections of previously published Presidential, Rule, Proposed Rule, and Notice documents. These corrections are prepared by the Office of the Federal Register. Agency prepared corrections are issued as signed documents and appear in the appropriate document categories elsewhere in the issue.

NATIONAL CREDIT UNION ADMINISTRATION

12 CFR Part 741

Requirements for Insurance and Eligible Obligations

Correction

In rule document 91-17820, beginning on page 35808, in the issue of Monday, July 29, 1991, make the following corrections:

§ 741.4 [Corrected]

On page 35811, in the third column, in § 741.4(a)(3), the references to paragraphs (a) and (b) should read "(a)(1)" and "(a)(2)", respectively.

BILLING CODE 1505-01-D

NUCLEAR REGULATORY COMMISSION

Possible Safety Impacts of Economic Performance Incentives: Final Policy Statement

Correction

In notice document 91-17484 beginning on page 33945 in the issue of Wednesday, July 24, 1991, make the following corrections:

1. On page 33945, in the 3d column, in the 12th line "EPA" should read "EPI".

2. On the same page, in the same column, in the second paragraph, in the last line "EPA" should read "EPI".

3. On page 33947, in the 2d column, in the 12th line "license" should read "licensee".

BILLING CODE 1505-01-D

DEPARTMENT OF TRANSPORTATION

Office of Commerical Space Transportation

Environmental Impact Statement; Washington, DC

Correction

In notice document 91-20164 appearing on page 41718 in the issue of Thursday, August 22, 1991, make the following correction:

In the third column, in the first full paragraph, in the seventh line, "September 2, 1991" should read "September 23, 1991".

BILLING CODE 1505-01-D

federal register

Friday
September 6, 1991

Part II

Architectural and Transportation Barriers Compliance Board

36 CFR Part 1191

Americans With Disabilities Act (ADA) Accessibility Guidelines for Buildings and Facilities; Transportation Facilities; Amendment to Final Guidelines

ARCHITECTURAL AND TRANSPORTATION BARRIERS COMPLIANCE BOARD

36 CFR Part 1191

[Docket No. 90-4]

RIN 3014-AA09

Americans With Disabilities Act (ADA) Accessibility Guidelines for Buildings and Facilities; Transportation Facilities

AGENCY: Architectural and Transportation Barriers Compliance Board.

ACTION: Amendment to final guidelines.

SUMMARY: On July 26, 1991, the Architectural and Transportation Barriers Compliance Board published final guidelines to assist the Department of Justice in establishing accessibility standards for new construction and alterations in places of public accommodation and commercial facilities, as required by title III of the Americans with Disabilities Act (ADA) of 1990. The guidelines reserved a section for additional requirements for transportation facilities. These final guidelines contain those additional requirements for transportation facilities and will ensure that such facilities are readily accessible to and usable by individuals with disabilities in terms of architecture and design, transportation, and communication. These guidelines are also applicable to publicly operated transportation facilities covered by title II of the ADA in order to assist the Department of Transportation (DOT) in establishing accessibility standards for those facilities. The Board has published final guidelines elsewhere in today's **Federal Register** for transportation vehicles.

EFFECTIVE DATE: September 6, 1991.

FOR FURTHER INFORMATION CONTACT: James Raggio, Office of the General Counsel, Architectural and Transportation Barriers Compliance Board, 1111-18th Street, NW., suite 501, Washington, DC 20036. Telephone (202) 653-7834 (Voice/TDD). This is not a toll-free number. This document is available in accessible formats (cassette tape, braille, large print, or computer disc) upon request.

SUPPLEMENTARY INFORMATION:

Background

On July 26, 1991, the Architectural and Transportation Barriers Compliance Board published final guidelines in the **Federal Register** to assist the Department of Justice in establishing accessibility standards for new construction and alterations in places of public accommodation and commercial facilities, as required by title III of the Americans with Disabilities Act (ADA) of 1990. See 56 FR 35408, as corrected at 56 FR 38174 (August 12, 1991). The guidelines contained scoping provisions and technical specifications generally applicable to all types of buildings and facilities covered by title III of the ADA (sections 4.1 through 4.35) and additional requirements specifically applicable to restaurants and cafeterias (section 5); medical care facilities (section 6); mercantile and business facilities (section 7); libraries (section 8); and transient lodging (section 9).

Title III of the ADA specifically covers privately operated terminals, depots, or other stations used for public transportation. The scoping provisions and technical specifications contained in sections 4.1 through 4.35 of the guidelines are applicable to those transportation facilities. Because transportation facilities have unique characteristics, some of which involve coordination with transportation vehicles, the Board reserved a section of the guidelines for additional requirements that would specifically apply to transportation facilities pending the development of accessibility guidelines for transportation vehicles. On March 20, 1991, the Board published a supplementary notice of proposed rulemaking (SNPRM) in the **Federal Register** which contained the proposed amendments to the accessibility guidelines for buildings and facilities for transportation facilities (56 FR 11874). The SNPRM sought comment from the public in response to specific questions and information regarding issues related to transportation facilities. The Board also published proposed guidelines for transportation vehicles in the **Federal Register** on the same date. A total of 150 commenters including a broad range of interested individuals, groups representing people with disabilities, transit agencies, manufacturers, bus operators and trade associations responded to the SNPRM and proposed guidelines for transportation vehicles. The comments were sorted by section or question and analyzed.

The Board is amending the accessibility guidelines for buildings and facilities to include additional requirements specifically applicable to transportation facilities. The additional requirements will ensure that transportation facilities are readily accessible to and usable by individuals with disabilities in terms of architecture and design, transportation, and communication.

As discussed under specific sections, the Board has reserved action in some areas pending further study or research. The Board has an on-going research and technical assistance program and plans to review and up-date the guidelines periodically to ensure that they remain consistent with technological developments and changes in model codes and national standards, and meet the needs of individuals with disabilities.

Title III of the ADA becomes effective on January 26,1992. See 42 U.S.C. 12181 note. The requirements of title III relating to new construction apply to places of public accommodation and commercial facilities designed or constructed for first occupancy after January 26, 1993. See 42 U.S.C. 12183(a)(1). The Department of Justice published final regulations to implement title III in the **Federal Register** on July 26, 1991 (56 FR 35544) which further address these dates.

In amending the accessibility guidelines for buildings and facilities, the Board has also made those guidelines applicable to publicly operated transportation facilities covered by title II of the ADA. Title II establishes accessibility requirements for both new and existing transportation facilities operated by units of State and local government and the National Railroad Passenger Corporation (Amtrak). Title II of the ADA also becomes effective on January 26, 1992. See 42 U.S.C. 12131 note, 12141 note, and 12161 note. In the case of rapid rail, light rail, and commuter rail, title II requires with respect to existing facilities that "key stations" as determined under criteria established by DOT be made accessible by July 26, 1993. See 42 U.S.C. 12147(b) and 12162(e)(2)(A). DOT may extend this period for stations that need extraordinarily expensive structural changes to, or replacement of, existing facilities for up to 20 years for commuter rail and 30 years for rapid rail and light rail provided certain conditions are met. Id. Title II also establishes "program accessibility" requirements with respect to all other existing stations on rapid rail and light rail systems for persons with disabilities other than wheelchair users. See 42 U.S.C. 12147. In the case of intercity rail, all existing stations must be made accessible by July 26, 2010. See 42 U.S.C. 12162(e)(2)(A). In addition, title II establishes accessibility requirements for alterations to existing facilities. See 42 U.S.C. 12147(a) and 12162(e)(2)(B). DOT is responsible for issuing regulations that include accessibility standards for these publicly operated transportation facilities. DOT's standards must be consistent with the Board's guidelines.

Section-by-Section Analysis

10. Transportation Facilities

10.1 General

This section is a scoping provision which applies all the other provisions for buildings and facilities published in the **Federal Register** on July 26, 1991 (56 FR 35408) to transportation facilities, in addition to the applicable requirements of this section.

Title III of the ADA does not require elevators in newly constructed or altered places of public accommodation and commercial facilities that are less than three stories or have less than 3,000 square feet per story, unless the facility is a type specified in the statute or designated by the Department of Justice. See 42 U.S.C. 12183(b). This exemption is contained in section 4.1.3(5) (Accessible Buildings: New Construction) of the guidelines. However, there is no elevator exemption in title II of the ADA for publicly operated transportation facilities. In addition, the Department of Justice has designated privately operated terminals, depots, or other stations used for public transportation, or an airport passenger terminal, as not eligible for the elevator exemption under title III of the ADA. See 56 FR 35544 (July 26, 1991) (28 CFR 36.401)(d)). Therefore, exception one for elevators in section 4.1.3(5) (Accessible Buildings: New Construction) and the exception in 4.1.6(k) (Accessible Buildings: Alterations) of the guidelines do not apply to transportation facilities covered by title II of the ADA and will not apply to privately operated transportation facilities covered by title III of the ADA under the Department of Justice's regulations. This has been clarified in the final guidelines for transportation facilities.

Comment. The Board sought comment in the SNPRM on whether or not the method for separating the guidelines according to transportation mode (e.g., bus stops and terminals, fixed facilities and stations, airports, and boat and ferry docks) was appropriate or whether another method should be used. An overwhelming majority of the comments supported the separation according to transportation mode.

Response. The Board has maintained the divisions as stated in the SNPRM.

Comment. Several commenters proposed publishing all provisions pertaining to transit facilities to eliminate cross-referencing or specifying which provisions of 4.1 through 4.35 apply to bus stops, as many provisions appear to be irrelevant. One commenter proposed referencing section 7.2 or referencing sections 5 through 9 to ensure that accessible ticketing windows are covered.

Response. While cross-referencing may be cumbersome, it is not feasible to republish in full every provision that applies to each different mode of transportation. In order to clarify that sections 5 through 9 are applicable to transportation facilities, the final guidelines specifically reference sections 5 through 9. Thus, a rail station that has a restaurant will have to comply with the requirements for the rail station and the applicable requirements pertaining to restaurants. If the rail station is located in a hotel, there are applicable requirements pertaining to the hotel. In addition, the reference to 4.1 through 4.34 was expanded to include a new section, 4.35 (Dressing Rooms).

Comment. One commenter requested a clarification of "fixed facility" and another commenter felt that the definition of "facility" should include platforms. One commenter was concerned that the proposed criteria does not consider the need for an "opposing zone" to provide return bus service.

Response. The term "fixed" was deleted from the phrase "fixed facility" to be consistent with the definition of "facility" in section 3.5 (Definitions) which provides that a facility is "[a]ll or any portion of buildings, structures, site improvements, complexes, equipment, roads, walks, passageways, parking lots, or other real or personal property located on a site." This definition would include platforms.

The suggestion to include guidelines requiring an "opposing zone" for return bus service involves an operational issue and is not under the purview of these guidelines.

Comment. The Board sought comment in the SNPRM on whether the terms "station" and "terminal" should be defined. The comments received were split on whether to define the terms in the guidelines or defer to DOT for definition. Some commenters suggested definitions for the terms.

Response. The final guidelines do not contain a definition of "station" or "terminal" as DOT has defined those terms in its regulations (see 49 CFR 37.3).

10.2 Bus Stops and Terminals

10.2.1 New Construction

Passenger Pad 10.2.1(1)

Section 10.2.1(1) of the final guidelines applies to the construction of a new bus loading "passenger pad" at a stop or the construction of a boarding and alighting area in a bus terminal. It does not address the location of a bus stop on an existing public way which is addressed in 10.2.2(1). The final guidelines specify a minimum clear level area (96 inches long and 60 inches wide) outside the bus door where a lift or ramp would be deployed. The space must be clear of utility poles, fire hydrants, street furniture and other similar obstacles.

Comment. Some commenters were confused by the language in the SNPRM which stated that "[b]us stops, bays and other areas where a lift or ramp is to be deployed shall have a pad with a firm, stable surface * * *." The commenters questioned whether this should be interpreted to mean that a concrete pad is required and others felt that it is not practical or cost-effective to require every new bus stop to have a pad.

Response. The Board recognizes that in some locations, a bus stop may consist of a sign on a pole in an unimproved dirt boarding area. The final guidelines were changed to clarify that "[w]here new bus stop pads are constructed at bus stops, bays and other areas where a lift or ramp is to be deployed, they shall have a firm, stable surface * * *." This is not a requirement for a concrete pad, but rather a design standard that must be followed where a pad is provided.

Comment. The SNPRM provided for a minimum clear length for bus stop pads of only 72 inches measured from the curb or vehicle roadway edge and a minimum clear width of 42 inches measured parallel to the vehicle roadway. The Board sought comments on whether those minimum dimensions were too restrictive and, if more room should be required, how much. The overwhelming majority of the responses supported increasing the minimum dimensions. Some commenters supported requiring that the bus stop pad be able to accommodate the entire lift (up to 48 inches) plus the entire length of the mobility aid (up to 48 inches). Other commenters suggested other dimensions were appropriate such as 5 feet by 8 feet; 4 feet by 8 feet; 5 feet by 6 feet; and 5 feet by 7 feet. One commenter stated that a typical public way in their locale extends only 60 inches from the face of the curb, and would not be able to meet the proposed 72 inch requirement. Another commenter stated that given that most transit agencies establish bus stops either on private land or on a public right-of-way, meeting the slope and size criteria is not always possible.

Response. The proposed dimensions in the SNPRM were minimum dimensions based on preliminary results of a Board-sponsored project on

accessible parking and loading zones. That study showed that the minimum space required at the forward edge of the lift for a wheelchair or mobility aid to exit was 3 feet. The 72 inch length requirement proposed in the SNPRM was barely adequate if the bus stopped slightly back from the curb or roadway edge to allow additional room to exit the end of the lift when deployed. In addition, the width requirement of 42 inches proposed in the SNPRM allowed for only 12 inches of leeway to position the bus. The comments received provided strong argument to increase both dimensions to better accommodate a wider range of mobility devices and to provide greater ease in aligning the bus into the pad under adverse conditions. The final guidelines increased the minimum clear area to 96 inches in length and 60 inches in width.

In order to accommodate those situations where physical or site constraints (including a limited public way) may prohibit compliance with the prescribed dimensions, the final guidelines provide that the minimum clear length of 96 inches measured from the curb or vehicle roadway edge and the minimum clear width of 60 inches measured parallel to the vehicle roadway shall be complied with to the maximum extent allowed by physical or site constraints.

Comment. One commenter questioned whether a "public way" was a sidewalk or roadway, or both.

Response. The SNPRM provided that the passenger pad shall be connected to the "public way" by an accessible route. To be more consistent with the language in 4.3(1) (Accessible Route), this terminology was changed in the final guidelines to "streets, sidewalks or pedestrian paths." A pedestrian path includes situations where there may not be a sidewalk or a street but just a dirt pathway.

Comment. The Board sought comments on how to provide the maximum acceptable slope without precluding the construction of pads in hilly areas. One commenter felt that the proposed solution requiring the slope parallel to the roadway to be the same as the roadway slope would work in some circumstances and noted that the relationship between the cross-slope of the sidewalk and street also affects the operation of the lift. A commenter from a transit advisory committee concurred with the 1:50 standard for new construction of pads, and further noted that the committee recommends a standard of 1:20 in their city for existing stops. Other commenters recommended that the slope not deviate more than 1:50 towards the roadway and perpendicular to it. Other commenters took the position that setting a maximum slope perpendicular to the roadway for drainage is an acceptable solution, as bus pads are often constructed after the roadway.

Response. The comments supported information which the Board had previously received from transit agencies and lift manufacturers which noted that if the slope of the pad is not consistent with the slope of the bus, the lifts will not operate properly. The final guidelines contain a provision that the slope of the pad parallel to the roadway shall, to the extent practicable, be the same as the roadway. For water drainage, a maximum slope of 1:50 perpendicular to the roadway is allowed.

Bus Shelters 10.2.1(2)

This provision concerns bus shelters on public streets. Bus shelters are often provided by a private company which sells advertising in or on the shelter. They are normally governed by city or local ordinance and usually involve some approval by the transportation entity. The final guidelines require that new or replaced bus shelters be sited at the bus stop so as to permit a wheelchair or mobility aid user can enter and use it. Shelters must be placed far enough back from the curb to allow an accessible route at least 36 inches wide into the shelter. The space under or inside the shelter must also be configured in such a way that it provides a clear area to accommodate at least one wheelchair or mobility aid user. The boarding area provided under paragraph (1) must also be accessible from the shelter.

Comment. One commenter suggested that bus shelters should accommodate two wheelchair users at one time and two commenters suggested that the accessible space should be increased to 60 inches by 96 inches.

Response. Bus shelters without fixed seats would, in all probability, accommodate more than one wheelchair user. However, the Board does not have sufficient information on the degree to which bus shelters without fixed seats are used and the Board did not increase the required clear space to accommodate two wheelchair users.

Route Identification Signs 10.2.1(3)

This provision of the final guidelines provides that where new bus route identification signs are provided, they shall comply with 4.30.5 (Finish and Contrast). In addition, to the maximum extent practicable, all new bus route identification signs shall comply with 4.30.2 (Character Proportion) and 4.30.3 (Character Height). Signs shall be sized consistent with legitimate local, state or federal regulations or ordinances and within those limits, the signs shall, to the maximum extent practicable, meet the requirements for Character Proportion and Character Height. Since the information contained in bus schedules, timetables, or maps posted at the bus stop or bus bay changes frequently, a specific exception was provided for such temporary information.

Comment. The SNPRM proposed to require at least one route identification sign and permanent information for the use of the transportation system to comply with 4.30.2 (Character Proportion), 4.30.3 (Character Height), and 4.30.5 (Finish and Contrast). Several commenters felt the provision was not appropriate for bus stops as it would increase the size of signs significantly, and the larger signs might not be permitted by traffic ordinances.

Response. The Board recognizes that traffic sign size restrictions in the federal manual of Uniform Traffic Control (MUTCD) as well as other local, or state, regulations or ordinances may make it impossible for transit agencies to design bus route identification signs to comply with 4.30.3 (Character Height) and 4.30.2 (Character Proportion) where one bus stop sign must identify numerous bus routes. The provision has been clarified to apply only to make it clear this is a new construction provision applying to new bus route identification signs and requires compliance with 4.30.5 (Finish and Contrast) which is consistent with the signage requirement for buildings and facilities. The provision also clarifies that, to the maximum extent practicable, all new bus route identification signs shall comply with 4.30.2 (Character Proportion) and 4.30.3 (Character Height). Signs shall be sized consistent with legitimate local, state or federal regulations or ordinances and within those limits, the signs shall, to the maximum extent practicable, meet the requirements for Character Proportion and Character Height.

Comment. Several commenters felt that large characters are not helpful to some travelers with low vision who cannot find the sign. Some commenters suggested that the provision be revised to include 4.30.4 (Raised and Brailled Characters and Pictograms). One commenter wanted the provision to clarify that Braille is not required on signs.

Response. Bus route identification signs are usually mounted overhead in part to enable the bus driver to see the bus stop. Adding 4.30.4 (Raised and

Brailled Characters and Pictograms) would have made it necessary for transit agencies to provide a second sign below the bus route identification sign so that it could be read tactually. The Board did not accept this recommendation.

Comment. One commenter suggested the provision require a maximum mounting height for timetables and that they be provided in large print. Another commenter suggested requiring a telephone number for where schedule information could be obtained.

Response. The provision only applies to new bus route identification signs. As timetables, schedules, and maps are subject to frequent change, they are generally regarded as temporary information. The Board regards providing timetables, and schedule information in alternate accessible formats as an operational issue under the purview of DOT. An exception has been added to the provision to clarify that bus schedules, timetables or maps that are posted at the bus stop or bus bay are not required to comply with this provision.

Comment. The Board sought information on how route and schedule or timetable information could be made accessible to persons with vision impairments. The following commenters, including several transit agencies, suggested a variety of options on how to make such information accessible. Metro of Seattle advised that they have instituted several measures that are of assistance to persons with vision impairments in using transit services such as installing a distinctive 2-inch square metal pole for a bus stop sign; a 24 hour route information number provides specific bus stop location information including detailed information regarding distances from intersections or other nearby landmarks. Amtrak stated that they utilize a ⅝ inch high lettering for schedules at each station and terminal, and offer a toll free telephone number for information. A commenter stated that in Napa, California, Braille is used on bus stop poles spelling out the word "BUS." The commenter also suggested that print letters could be engraved.

The Massachusetts Bay Transportation Authority (MBTA) comments provided the following information. MBTA provides Braille plates indicating the route name and number at the bottom of the bus sign. Large print lettering of bus number and route information is also provided. A passenger relations training program for operators and guards is designed to improve on-board public address announcements. Prerecorded automatic station announcements have been installed at various transit stations. Researchers in New York City are developing a "Trip Tix" system for blind bus and subway riders similar to individualized highway route information provided by American Automobile Association to their members. Other commenters suggested the installation of handsets which would allow the user to hear a recorded message or to contact a bus company operator for information; using a distinctive pole shape for bus stops; providing schedule and timetable information through localized AM transmissions on limited frequencies; or using tactile maps or talking sign technology.

Response. The Board received numerous suggestions for different ways to make route and schedule information available to persons with vision impairments. However, the Board has no way of knowing at this time whether the systems proposed are effective or equally effective solutions. Furthermore, many of the proposed systems were wayfinding methods for locating a bus stop. Others proposed systems which do not directly relate to the facility and are not under the purview of the Board. The Board believes that further research is necessary before facility guidelines are established to provide information in a format accessible to persons with vision impairments.

Comment. The final guidelines do not impose the requirements for illumination contained in 4.30 (Signage) since signage is usually outdoors where lighting is not controllable. The Board sought information on whether a separate requirement for illumination should be included for signage within terminals. Many of the comments received supported a provision for illumination in terminals and a limited number of commenters supported a provision for outdoor signage as well. However, some of the commenters were concerned about vandalism and maintenance.

Response. A number of commenters objected to proposed requirements for illumination in 4.30 (Signage). The Board reserved the technical specifications for illumination pending further study. Information on illumination is included in the appendix at A4.30.8 and is advisory only.

10.2.2 Bus Stop Siting and Alterations

The title of this section was changed to clarify the context of this section which addresses siting of bus stops and alterations.

Bus Stop Sites 10.2.2(1)

This provision of the final guidelines requires that once areas for bus stops are selected, that the bus stop shall be sited in a location such that, to the maximum extent practicable, the clear space required in 10.2.1(1) and (2) is available at bus stops on existing streets.

Comment. A number of commenters expressed various concerns over the locations of bus stops. They noted that bus stops located in parking lots and other open spaces are inappropriate for blind and visually impaired persons since such locations lack orientation cues. They further remarked that some bus stops are located where there are no curb ramps or on hilly terrain which creates problems for persons with mobility impairments and that other bus stops are found in locations dangerous to everyone such as in the middle of the street.

Response. While these are important concerns, the guidelines address the location of bus stops and shelters only insofar as the location affects the design, construction and alteration. No changes were made to this provision.

Route Identification Signs 10.2.2(2)

This provision requires compliance with 10.2.1(3) when new bus route identification signs are installed at existing sites and when new signs replace old signs. The final guidelines provide that these signs comply with 4.30.5 (Finish and Contrast) and, to the maximum extent practicable, the signs comply with 4.30.2 (Character Proportion) and 4.30.3 (Character Height). The provision does not require signs to be installed where signs are not otherwise provided.

Comment. The Board sought information on the effects of character height and spacing requirements and whether or not the provisions of this section are adequate to address the needs of persons with visual impairments who use the bus system. A few commenters recommended signage standards that would exceed the requirements of 4.30.3 (Character Height).

Response. The Board believes that requiring characters that exceed the requirements of 4.30.3 (Character Height) would add increased expense, and possibly reduce the amount of information that could be provided.

Comment. The SNPRM provided that if new route identification signs are provided, at least one shall comply with 4.30.2 (Character Proportion), 4.30.3 (Character Height), and 4.30.5 (Finish

and Contrast). Five transportation agencies suggested that it is impractical to require bus stop signage to meet the criteria and were concerned that this provision would affect the extent to which signage would be deployed. They recommended that separate design standards be developed for bus stop signs such as stipulating that the letters be as large as possible to convey the necessary information while conforming to the traffic sign ordinance requirements. MBTA suggested that the transit operator should be allowed to use a sign to fit the available space supplemented with an adjacent, smaller sign.

Response. The Board recognizes that compliance with the provision relating to signage as stated in the SNPRM could in some cases be problematic where legitimate local, state or federal regulations or ordinances restrict the size of bus stop signage and where numerous routes are identified on a single sign. The final guidelines were changed to require compliance with 4.30.5 (Finish and Contrast) and that signs and lettering will be sized, to the maximum extent practicable, to comply with 4.30.2 (Character Proportion) and 4.30.3 (Character Height). To accommodate this provision then, signs shall be sized to the maximum extent permitted under legitimate local, state or federal regulations or ordinances. New signs must meet the same provisions as new construction.

Comment. One commenter requested clarification that existing signage only needs to be brought into compliance when there is an alteration.

Response. A clarification was made to the provision to address this concern. Rather than refer to "at least one" new route identification sign, the final guidelines state that this provision is applicable to bus route identification signs that are new or are "replaced."

10.3 Fixed Facilities and Stations

10.3.1 New Construction

This section is based on existing DOT regulations in 49 CFR 609.13 for stations, terminals, buildings or other facilities designed, constructed or altered with Urban Mass Transit Administration assistance. The provisions of this section apply to new facilities and stations in rapid rail, light rail, commuter rail, intercity bus, intercity rail, high-speed rail and other fixed guideway systems.

Travel Distances and Circulation Path 10.3.1(1) [10.3.1 (1) and (2) in the SNPRM]

The final guidelines have combined 10.3.1(1) and 10.3.1(2) of the proposed guidelines in the SNPRM and comments on both sections are discussed below.

Comment. The commenters expressed support for the provision in the SNPRM minimizing the travel distances for wheelchair users and other persons who cannot negotiate steps. MBTA requested an exception for situations where a mini-high platform may be at the end of the platform farthest from the major entrance. The SNPRM also required that the circulation path for persons with disabilities coincide, to the maximum extent practicable, with the circulation path for the general public. Seventeen commenters responded favorably to this provision, citing safety as the primary reason for support. Commenters felt that a route used by the general public is generally safer. They believe that a circulation path that is out of the way is more likely to expose persons to criminal activity and to reduce the chance of readily available assistance if that should become necessary for any reason. Three commenters supported the requirement for directional signage indicating the accessible route where the circulation path is different. Two commenters requested that the provision be amended to address the needs of persons who are both visually impaired and mobility impaired.

The SNPRM required designers to lay out stations in a straightforward manner, both to reduce the distance a person with a disability would need to travel and to encourage consistency in design to assist all persons, but especially persons with cognitive, visual or stamina-limiting disabilities to locate various elements expeditiously. The requirement is a performance criterion which seeks to encourage good efficient design. In the SNPRM, the Board sought information on what other general or specific design guidance should be provided. Six transit agencies, including Chicago Transit Authority (CTA) and two business groups expressed a preference for general performance standards as opposed to specific design criteria. A number of commenters suggested design criteria that might improve access for persons who have vision impairments. One commenter suggested the use of tactile or detectable surfaces for orientation and mobility queues. Other suggestions included the use of area maps in print and voice formats; positioning turnstiles so that one would always enter to the right and uniformly positioning all equipment such as add fare, fare vending and other point of sale machines in each station; locating restrooms, water fountains, and public telephones in a manner which minimizes travel distance; providing good lighting on signs; utilizing contrasting colors in wayfinding; and providing moving sidewalks in long passageways.

The Board sought further information on whether provisions pertaining to the circulation path for people with disabilities should be retained even if it is not included in 4.3 (Accessible Route). Eleven commenters urged that this provision be retained even if it is not included in 4.3 (Accessible Route). One commenter opposed the concept, and there was a suggestion to retain the provision but to allow an exception where the accessible route is shorter than that used by the general public.

Response. The Board believes that the requirements in the SNPRM regarding travel distance and circulation path are closely related and they have been combined under one paragraph. MBTA's concern regarding mini-high platforms is addressed by applying the provision "to the maximum extent practicable" which recognizes that in some circumstances it is necessary to locate the mini-high platform at the end of the boarding area. However, if this situation occurs, the impact can be minimized by placing accessible parking and other elements near the point where the mini-high platform is accessed. Thus, travel distance may be equivalent to that of the general public, but the circulation path will differ at certain points. Both variables must be controlled in relation to one another, to the maximum extent practicable.

Although providing an exception where the travel route may be "shorter" than that used by the general public would address the needs of persons with limited stamina, it would fail to address the concerns of the majority of commenters who took the position that safety is more important in connection with a coinciding route than convenience or ease. The Board believes that safety may be more important than convenience. However, where safety is equally assured, a shorter route is preferable.

In response to commenters who made suggestions for specific facility design criteria, the Board believes that a performance standard allows greater flexibility in design that can better address the unique aspects of each system and system type.

Signage location is unlikely to be strictly uniform even within a single system. The Board sought guidance in

the area and believes that further research is necessary. Some commenters suggested that the Board require this section to provide for signage accessible to persons with vision impairments. Under the final guidelines, if sighted individuals including wheelchair users or those who use other mobility aids are to make use of signage in crowded facilities, it must be usable and this may require that it be placed above the heads of standing people. If the Board had required tactile signage, it is likely that the transit agency would have had to install two types of signage for each set of information, (i.e., visual signage for sighted individuals and tactile signage for the individual who reads tactually). In the final guidelines the Board has required signage to comply with 4.30.1 (General), 4.30.2 (Character Proportion), 4.30.3 (Character Height), 4.30.5 (Finish and Contrast), and 4.30.7(1) (Symbols of Accessibility). The provision is intended to make such signage more visible to persons with low vision and, by requiring the use of the International Symbol of Accessibility, more readily identifiable for persons traveling an accessible route. No provision has been added to address the needs of persons with severe vision impairments who require directional information regarding the accessible route because the Board has very little information to adequately address the wayfinding needs of such persons at this time.

Where the circulation path does not differ from that used by the general public, no signage is required. However, where accessible routes lead to inaccessible paths, entrances, or exits used by the general public signage is required. A requirement that signage "indicate direction to and identify" the accessible route is used in place of the SNPRM requirement that signage "show" the accessible entrance and accessible route. This is consistent with the requirement that travel distance for persons who use wheelchairs or cannot negotiate steps is to be minimized, to the maximum extent practicable, as compared to the general public.

The provision regarding fare collection systems to be on an accessible route is moved to 10.3.1(7) for clarity.

Accessible Entrances 10.3.1(2) [10.3.1(3) in the SNPRM]

The final guidelines provide that in lieu of compliance with 4.1.3(8) (Minimum Requirements), at least one entrance to each station shall comply with 4.14 (Entrances). Additionally, if different entrances to a station serve different transportation fixed routes or groups of fixed routes, at least one entrance serving each group or route shall comply with 4.14 (Entrances). All accessible entrances shall, to the maximum extend practicable, coincide with those used by the majority of the general public.

Comment. The SNPRM offered four options for entrance requirements to transportation facilities. Option one required that entrances to a station serving different transportation fixed routes or groups of fixed-routes be accessible. Option two required each entrance to a station which is more than 400 feet from an accessible entrance to be accessible. Option three required all entrances to stations to be accessible. Option four required that in lieu of compliance with 4.1 (Minimum Requirements), at least one entrance to each station shall be accessible. The Board sought comment on the benefits and costs of each option for entrances. The Board was particularly interested in whether a specific distance criteria would be reasonable.

Sixteen percent of those responding stated a preference for option one. Eight percent of the commenters favored option two. Twenty-five percent of the commenters favored option three. Sixteen percent of the commenters favored option four. The remaining commenters did not express a preference or expressed a preference for an option other than those presented. MBTA and four other transit agencies recommended a new option which combined options one and four. Their proposal would allow companion stairs to serve a common area that has a single elevator (or ramp). Under this proposal, a number of entrances in proximity to one another (e.g., opposing corners at an intersection) may converge at a mezzanine or other common point of entry. CTA and one other transit agency felt that option three would hold the transit industry to a higher standard than other types of buildings and facilities. Southeastern Pennsylvania Transit Authority (SEPTA) supported option one providing that any additional entrances would be required only if they added functional utility. SEPTA also stated that option three would impose a burden of having to install and maintain numerous elevators.

A number of commenters expressed a preference for a specified distance. The responses ranged from 100 feet maximum to 900 feet maximum. Paralyzed Veterans of America (PVA) noted that the Uniform Statewide System for Handicap Parking regulations suggests 200 feet is a reasonable distance for making determinations as to whether an individual has a limited ability to walk. The Northeast Regional Commuter Rail Corporation (Metra) suggested that 900 feet is reasonable as it is the length of a 10 car platform.

Commenters who responded to the imposition of distance requirements fell into two major groups. First, there were those, primarily persons with disabilities and their organizations, who felt that safety and ease of access would be affected by establishing a route that is not proximate to that used by the general public. Weather conditions were of concern, but the greatest concern was the perceived vulnerability to crime of persons traveling away from routes which are attractive to, or open to, the general ridership. The second group, primarily transit agencies, was concerned that multiple accessible entrances would be costly. In some instance, they noted problems associated with existing site conditions beyond the authority's control.

Response. The safety and security of every passenger is of concern to both transit users and the transit provider. In new construction, the Board expects that a general performance requirement will be easy to meet. For example, a transit provider often has the opportunity to configure a facility so that all entrances converge at a common point of entry for different transportation fixed routes or groups of fixed routes. On the other hand, setting a distance limit is not always feasible even in new construction.

Comments relating to a specified distance were varied and no commenter provided data relating to use of a transit facility in support of their position. PVA's suggestion, that the Board consider criteria adopted under the Uniform Statewide System for Handicap Parking, relates to who may be qualified for accessible parking privileges and does not take into consideration the interrelationship between parking and a variety of design factors in a transit facility. The responses received did not support the 400 foot requirement in option two. Commenters pointed out that option three fails to acknowledge that a number of entrances may be proximate to one another and serve a common point of entry.

A combination of options one and four similar to that proposed by several transit agencies, with modification to ensure that accessible entrances coincide with other entrances, addresses the needs of both persons with disabilities and transit providers. The final guidelines have combined option one and option four so that one

accessible entrance would be sufficient only if that entrance serves all different transportation fixed routes or groups of fixed routes. This requirement does not necessarily mean that the closest entrance will be the accessible entrance. In the event that different entrances serve these routes, an accessible means of getting to and from each different route or groups of routes is necessary. For example, if a rail station has two entrances each serving a different bus route and no accessible connecting route between them, both entrances must be accessible. If the transportation entity chooses to divert all bus routes to one entrance, then only that entrance would be required to be accessible.

The final guidelines provide that all accessible entrances shall, to the maximum extent practicable, coincide with those used by the majority of the general public. This provision acknowledges that it is not always practicable to place an accessible entrance to coincide with the entrance used by the general public. For example, an elevator may meet the surface at a location different from an escalator. Nevertheless, this provision is intended to mean that accessible entrances are to be used by the general public and are not to be restricted to persons with disabilities.

Accessible Direct Connections 10.3.1(3) [10.3.1(4) in the SNPRM]

This provision of the final guidelines requires that direct connections from transportation facilities to commercial, retail, or residential facilities shall have an accessible route complying with 4.3 (Accessible Route) from the point of connection to boarding platforms and all transportation system elements used by the public. It further requires that any elements provided to facilitate future direct connections shall be on an accessible route.

Comment. The SNPRM required that when direct connections are provided, the transportation entity shall provide an accessible entrance and an accessible route to and from boarding platforms and each such direct connection including all transportation system elements used by the public. The Board sought comment on whether the provision in the SNPRM was adequate to ensure that persons with disabilities have access to connecting facilities with the same ease and independence as the general public. Sixty percent of the commenters indicated that the provision was adequate to ensure that persons with disabilities have access to connecting facilities with the same ease and independence as the general public. Transit agencies expressed concern that they do not always have control over direct connections. Six commenters, including Eastern Paralyzed Veterans of America, American Public Transit Association (APTA), and CTA recommended that elements used to facilitate future connections such as "knock-out" panels be required to be located on an accessible route so that there is no ambiguity as to whether the location will accommodate people with disabilities. They further noted that this is especially important where the authority does not have control over joint development.

Both New Jersey Transit (NJT) and New York Metropolitan Transit Authority (MTA) indicated a likelihood that commercial connections may simply not be built if the cost of accessibility is excessive. These agencies, along with Amtrak, recommended deleting this provision in the SNPRM. The State of Wisconsin Council on Physical Disabilities strongly favors this provision for climatic reasons.

Response. Commenters were opposed to this section in the SNPRM because of their concern that they will be required to assert control over properties where it is not within their legal authority to do so. A secondary concern was that future development may be unpredictable, especially when joint development is under the control of some other entity. The SNPRM suggested that direct connections when provided would be new construction and would trigger the accessible route and entrance requirements. The Board deleted the term "when provided" to clarify that this provision is a new construction guideline.

The Board recognizes that a transit agency may only have authority over the route to the entrance and not the entrance itself. Therefore, the final guidelines provide that connections to commercial, retail, or residential facilities have an accessible route complying with 4.3 (Accessible Route) from the point of connection to boarding platforms and all transportation system elements used by the public. The final guidelines also require that any elements provided to facilitate future direct connections shall be on an accessible route connecting boarding platforms and all transportation system elements used by the public. The Board understands that planning for "knock out" panels or other points of future connection is within the transit authority's control when constructing a new facility. The final guidelines focus on an accessible route and elements which are incorporated into the design of the transportation facility to facilitate future connections.

Tactile Signage for Each Entrance 10.3.1(4) [10.3.1(5) in the SNPRM]

This provision of the final guidelines provides that where signs are provided at entrances to stations identifying the station or the entrance, or both, at least one sign at each entrance shall comply with 4.30.4 (Raised and Brailled Characters and Pictograms) and 4.30.6 (Mounting Location and Height). The signs shall be placed in uniform locations at entrances to the transit stations to the maximum extent practicable. An exception to this rule would be where the station has no defined entrance, but signage is provided, then the accessible signage shall be placed in a central location.

Comment. The SNPRM provided that each entrance to a station would have at least one sign identifying that station and route or routes served if applicable and the signs would comply with 4.30.4 (Raised and Brailled Characters and Pictograms) and 4.30.6 (Mounting Location and Height). The Board sought comment on whether a standard location for tactile signage should be prescribed. The majority of commenters felt that a standard location is necessary for tactile signs to be usable by persons with vision impairments. Twenty-five percent of the commenters recommended that such signage should be located within the same functional area within a station or system. Other commenters recommended a variety of solutions including mounting signage with the centerline at 60 inches above the pavement; and placing it at main entrances and all other entrances connected by an accessible route. Some individuals with disabilities and their groups suggested the possibility of using tactile pointers (wayfinding devices), and remotely accessible signage (i.e., audible signage requiring the use of personal receivers).

Of those who did not support a standardized location, two commenters were specific about their concerns. A researcher from Boston College took the position that unless there is a highly predictable location for tactile signage, it serves little purpose for those who need it. While recognizing that persons with vision impairments need the information, the researcher encouraged the Board to develop alternate means such as a distinctively shaped post or pylon which is easily located. SEPTA indicated that given the low number of visually impaired persons who read Braille, the cost is not justified where the authority provides other

accommodations such as tapes, telephones, and other alternative informational resources.

To assist in further development of this provision, the Board also sought comment on how information regarding routes and destinations should be made available to individuals who have severe vision impairments. The majority of the commenters recommended an auditory method of providing information, while twenty-five percent endorsed a form of tactile signage. Suggestions for auditory methods varied considerably and included remotely accessible signage, digitized speech, user-activated recordings, central loud speakers, and courtesy telephones. Seattle Metro provides direct phones to the information office. One trade association asserted that other passengers and staff adequately assist passengers who are blind.

Response. With respect to transit facilities, recommendations for certain types of auditory assistance found greater favor among commenters than tactile signage. However, many of the auditory systems such as courtesy telephones are likely to be as difficult to locate on boarding platforms as tactile signage. The SNPRM did not address the problem of placement and location and few commenters addressed this issue. The use of remotely accessible signage may be a possibility in the future, however, such a system would not address the needs of persons who have both vision and hearing impairments and, therefore, tactile signage would still be necessary.

In response to these concerns, the final guidelines require that signs shall be placed in uniform locations at entrances within the transit system to the maximum extent practicable. The Board recognizes that easily located signage is imperative if it is to be usable, but that strict uniformity is not always possible. It is expected that transit facilities will exercise good judgment and careful planning in the placement of signage to achieve uniformity where possible.

Comment. APTA recommended that the Board address situations where there is no entrance such as in the case of certain commuter rail stations by requiring signage in a "central location." Maryland Rail Commuter Authority (MARC) and one other commuter rail operator suggested that signs are provided for drivers of vehicles. One transit agency commented that a meaningful application of this provision may be impossible especially where there are multiple entrances. Metra recommends waiving this requirement where tactile signs have a history of being stolen or vandalized.

Two transit agencies supported signage identifying each entrance of each station but oppose including route and destination signs based on the complexity of doing so and concerns regarding vandalism.

Response. The final guidelines provide that tactile signage at entrances is only required to identify the station or the entrance, or both. The Board has clarified the requirements to provide that if a station is unmarked, no tactile signage is required. If a station has no defined "entrance" but signage identifying the station nonetheless is provided, a requirement has been added that accessible signage must be placed in a central location. The Board believes that where signage is provided, it should also be provided for persons with vision impairments.

Station Identification Signs 10.3.1(5) [10.3.1(6) in the SNPRM]

This provision of the final guidelines requires that rapid rail, light rail, commuter rail, intercity rail, high speed rail and automated guideway transit stations shall have identification signs complying with 4.30.1 (General), 4.30.2 (Character Proportion), 4.30.3 (Character Height), and 4.30.5 (Finish and Contrast). Signs shall be placed at frequent intervals and shall be clearly visible from within the vehicle on both sides when unobstructed by another train. When station identification signs are placed close to vehicle windows (i.e., on the side opposite from boarding) each shall have the top of the highest letter or symbol below the top of the vehicle window and the bottom of the lowest letter or symbol above the horizontal mid-line of the vehicle window.

Comment. A third of the commenters recommended audible accommodations for persons with vision impairments. More than half of the commenters were transit agencies who were concerned that the provision in the SNPRM required placement of station identification signs close to the vehicle window. The commenters noted a variety of problems with such a requirement such as trains which do not have windows at the same height in relation to a seated person; the difficulty of locating signs between tracks; the fact that signs will be obstructed on one side of the train when another train is in the station; and a distance/height interaction that can allow placement on a wall on the far side of the boarding platform.

Response. Until such time as further research can be conducted, the Board cannot justify requiring audible signage. The Board has provided clarification regarding the placement of signage close to a vehicle window. The final guidelines do not require signage close to the vehicle window, however, the guidelines do require that the signage be visible if provided in that location. Additionally, the final guidelines recognize that signage can be temporarily obstructed by another train on adjacent tracks.

Signs on Boarding Areas, Platforms, and Mezzanines 10.3.1(6) [10.3.1(7) in the SNPRM]

This provision of the final guidelines requires that lists of stations, routes or destinations served by a station and located on boarding areas, platforms or mezzanines shall comply with 4.30.1 (General), 4.30.2 (Character Proportion), 4.30.3 (Character Height), and 4.30.5 (Finish and Contrast). Further, a minimum of one sign complying with 4.30.4 (Raised and Brailled Characters and Pictograms) and 4.30.6 (Mounting Location and Height) shall be provided on each platform or boarding area identifying the specific stations. All signs shall, to the maximum extent practicable, be placed in uniform locations within the transit system.

Comment. The SNPRM did not specify location for signage. Further, it required all signs on platforms or boarding areas identifying a specific station to comply with 4.30.4 (Raised and Brailled Characters and Pictograms) only. A state government agency recommended that lists of stations on a line comply with all of 4.30 (Signage). Metra suggested that the requirement that signs on platforms or boarding areas identifying the specific station comply with 4.30.4. (Raised and Brailled Characters and Pictograms) be deleted for commuter rail stations due to vandalism. Other commenters noted that 10.3.1(5) [10.3.1(6) in the SNPRM] requires that station identification signage be placed at frequent intervals and visible from within the train, and that tactile station signs required by 10.3.1(6) [10.3.1(7) in the SNPRM] will be placed out of reach.

One individual with a disability supported the provision as it was proposed in the SNPRM; a second suggested that locations for signage must not vary throughout a system; and, a third urged that information be provided in the most "practical" manner so that new technologies may emerge.

Response. The Board believes that commuter rail stations should not be exempted from the requirement to provide tactile signs because tactile signs are necessary to some visually

impaired or blind persons. While vandalism is a concern, it is a concern for all types of signage. The Board concurs with commenters' concerns that the requirements in 10.3.1(6) and 10.3.1(5) could be mutually exclusive if only a single sign was provided high on a wall. The Board acknowledges that requiring tactile signage at every location where a station identification sign is provided could impose a significant cost burden. Therefore, the final guidelines require that a minimum of one tactile sign be provided and that it be placed in a uniform location to the maximum extent practicable. By application, these two requirements are intended to provide a minimum of one sign in a predictable location as opposed to numerous signs in unpredictable locations.

In order to be consistent with 10.3.1(4), the final guidelines have required that tactile signs shall be placed in uniform locations within the system, to the maximum extent practicable. When remotely accessible signage or such other technology is field tested and readily available, it could provide a means of equivalent facilitation. Until that time, tactile signage remains the only viable alternative.

A requirement in the SNPRM for compliance with 4.30.8 (Illumination Levels) is deleted as that section has been reserved.

Fare Machines and Gates 10.3.1(7) [10.3.1(8) in the SNPRM]

The final guidelines provide that automatic fare vending, collection and adjustment systems shall comply with 4.34.2 (Controls), 4.34.3 (Clearance and Reach Range), and 4.34.4 (Equipment for Persons with Vision Impairments). Additionally, at each accessible entrance such devices shall be located on an accessible route. If self-service fare collection devices are provided for the use of the general public at least one accessible device shall be provided for entry and for exit. Accessible fare collection devices shall have a minimum clear opening width of 32 inches; shall permit passage of a wheelchair; and, where provided, coin or card slots, and controls necessary for its operation shall comply with 4.27 (Controls and Operating Mechanisms). The gates which must be pushed open by wheelchair or mobility aid users shall have a smooth continuous surface extending from 2 inches above the floor to 27 inches above the floor and shall comply with 4.13 (Doors). Finally, where the circulation path does not coincide with that used by the general public, accessible fare collection systems shall be located at or adjacent to the accessible point of entry or exit.

Comment. With respect to gates, both New York City and Metra responded that they provide assisted control entry for passengers with disabilities. Metra has ten lines where accessible gates are activated by remote control in response to a user signal. They use closed circuit television to monitor entry and there is no on-site attendant. Metra recommends changing the section to allow this option.

Response. In the case of Metra and other systems that provide a similar accommodation for entrance gates, the equivalent facilitation provisions contained in the guidelines would permit continued use of remotely activated gates providing that equal or greater access is achieved.

Comment. The NJT requested clarification that the provisions in this paragraph apply only to newly purchased devices. Bay Area Rapid Transit (BART) noted that new machines that have already been ordered will have only limited capacity to accommodate persons with vision impairments.

Response. This provision does not require the replacement of machines which are in existing stations. However, 10.3.2(2) requires accessible device(s) in key stations.

Comment. One transit agency requested clarification that coin or card slots must comply only "if provided."

Response. The final guidelines include language clarifying that coin or card slots must comply only where provided.

Comment. A researcher from Boston College requested an amendment that would prescribe the location of wheelchair accessible self-service devices where only one is provided in a bank. The researcher additionally recommended that fare card vending and collection, and adjustment devices be designed to accommodate farecards having one tactually distinctive corner and that token collection devices shall be designed to accommodate tokens which are perforated. The American Council of the Blind requested a change in the provision to make controls tactually detectable so that buttons are raised above the surrounding surface and activated by a mechanical motion.

Response. The SNPRM proposed that control identification signage complying with 4.30.4 (Raised and Brailled Characters and Pictograms) be provided. The Board has addressed this issue in 4.34.4 (Equipment for Persons with Vision Impairments) by adopting a performance standard in the final guidelines rather than specific criteria. The requirement that control identification signage comply with section 4.30.4 (Raised and Brailled Characters and Pictograms) exceeds the requirements of 4.34.4 (Equipment for Persons with Vision Impairments). The Board finds no justification for establishing substantially different guidelines for fare vending or adjustment machines. Advisory material has been added to the appendix consistent with the suggestions from the American Council of the Blind and the researcher from Boston College.

Regarding placement of accessible fare collection devices, the Board has required that station design layouts minimize the distance which wheelchair users and others must travel. This will affect placement of all elements and, therefore, no standard location was prescribed. However, where the circulation path is different from that used by the general public, fare systems are to be located at the accessible point of entry or exit. For example, in some systems the elevator bypasses the mezzanine or connects at a point which is distant from the entrance most often used by the general public. A provision has been added to ensure that in such a case, devices would be placed at or near the accessible point of entry or exit. This is to ensure that people with limited stamina are not required to travel substantially greater distances than members of the general public.

Detectable Warnings 10.3.1(8) [10.3.1(9) in the SNPRM]

This provision of the final guidelines provides that platform edges bordering a drop-off and not protected by platform screens or guard rails shall have a detectable warning. Such detectable warnings shall comply with 4.29.2 (Detectable Warnings on Walking Surfaces) and shall be 24 inches wide running the full length of the platform drop-off.

Comment. The SNPRM required that boarding areas and platform edges bordering a drop-off not protected by platform screens shall have a detectable warning complying with 4.29 (Detectable Warnings), at least 36 inches wide, or ⅓ the width of the platform, whichever is less, running the full length of the platform drop-off. Also, the SNPRM specified that in interior stations, the detectable warning shall differ in resiliency or sound-on-cane-contact from the adjacent platform materials. The majority of the commenters were in favor of requiring detectable warnings on platform edges. However, the majority of commenters opposed the width formula. Many of those were

individuals with disabilities or their groups. Of greatest interest, was the variation among commenters who urged different widths of the warning itself. APTA strongly recommended a 12 to 18 inch detectable warning and argued that, on a narrow platform, a wider detectable warning will not make it possible to detect the difference between the safe and hazardous areas. The relationship between warning and "safe" area was of concern to several commenters including individuals with disabilities. Transit agencies supported widths ranging from 36 inches to 12 inches. The NJT recommended using 8 feet from centerline of the track for all warnings. In their facilities, this is equal to approximately 35 inches for a standard low platform and 29 inches on a standard high-level.

The American Council of the Blind supported a warning which is 24 inches minimum. Additionally, a principal researcher in this subject area, noted that 24 inches is adequate and that the width formula would be rarely necessary.

Response. There is substantial consensus among individuals with disabilities, researchers, and the transit industry that detectable warnings can be less than 36 inches and still be effective. The Board had originally proposed that the detectable warning strip required at the edge of platforms be 36 inches wide, running the full length of the platform. This number was based on a table presented in a report on tests of detectability issued by the Department of Transportation. (See Tactile Warnings to Promote Safety in the Vicinity of Transit Platform Edges, 1987.) According to the test results, a strip 42 inches wide was needed to alert 95% of the subjects, while 36 inches was sufficient to alert 93%. The 36-inch standard was proposed because it represented an even number of feet and would provide more uniformity. However, because detectable warnings may be placed on some existing platforms, and even some new platforms might have site constraints which preclude wide platforms, a variance was allowed for narrow platforms.

The requirement has been changed in the final guidelines due to several factors. First, in the transit systems where the material has been used, a 24-inch strip has proven very effective. Second, as the researchers and others pointed out, the test procedure in the report was somewhat artificial; subjects had no advance information as to the characteristics of the warning. In fact, a width of 24 inches alerted more than 84% of the subjects. Moreover, 94% of the subjects were alerted on a second trial, when they knew what to expect. Third, in stations where the prescribed detectable warnings have been used, all passengers tend to congregate at the edge of the material. Some commenters expressed concern that, if persons stood back from a 36-inch strip, other passengers might use the 36-inch "path" provided to circumvent crowds, thus partially defeating the purpose of the warning material.

In view of the success of the 24-inch width in actual transit applications, the Board believes that the width in the final guidelines is adequate to provide a warning while still meeting the legitimate concerns of transit operators. Furthermore, a reduction to 24 inches is supported by the majority of commenters responding to this issue. The Board also believes that reduction in width beyond this would make such warnings ineffective. Since the final guidelines provide that detectable warning shall be a minimum of 24 inches wide, the Board finds a varying width formula unnecessary.

Comment. A number of commenters responded to the technical provisions of 4.29.2 (Detectable Warnings on Walking Surfaces) regarding color and dome pattern.

Response. This matter was addressed in 4.29.2 (Detectable Warnings on Walking Surfaces) of the buildings and facilities guidelines and the Board believes that there is not sufficient justification to change the technical requirements for transit facilities.

Comment. The Board sought comment on whether bus bay areas with a "standard" curb should be required to have a detectable warning or whether warnings should only be applied adjacent to a "substantial" drop-off. Additionally, the Board sought comment on how a "nominal" curb could be defined. Two-thirds of the commenters supported an exception for drop off areas with a nominal curb. Of those commenters, one third supported the concept of detectable warnings at bus bays only with the exception that they be applied adjacent to a substantial drop-off. One third of the commenters opposed any exception at bus bays regardless of the height of the curb. One seventh of the commenters opposed a requirement for detectable warnings at bus bays.

Recommendations for the height of the curb ranged from 20 inches to one-half inch. Several commenters stated that the height of the curb is irrelevant since "the bus is the hazard, not the curb" and further commented that the hazard is greatly exaggerated at bus bays because bus traffic travels with one tire against the curb unlike normal traffic.

Response. The Board has not determined whether bus bays as a class are substantially more hazardous than normal street curbs. Furthermore, bus bays differ in configuration and design: some permit the bus to head-in and back-out of the bay and, therefore, wheels do not "scrape" the curb and pedestrians are clearly within the drivers' sight. The commenters provided very little guidance as to a definition of "standard" or "nominal" curb. Any truly hazardous vehicular way is required to comply with 4.29.5 (Detectable Warnings at Hazardous Vehicular Areas) including transit facilities.

Comment. The Board requested data on exterior applications of detectable warnings, particularly with respect to resilience. Some commenters explicitly supported exterior use of detectable warnings while only one commenter expressly opposed it. However, a variety of commenters, suggested they would oppose exterior applications if resiliency and sound-on-cane-contact is required. A manufacturer of detectable warnings advised that the question of durability is not valid because materials can be recessed. Other commenters, however, stated that they have no knowledge of resilient materials that have proven durable in extreme climates.

Response. Information received in response to the SNPRM confirmed the Board's understanding that resiliency and sound-on-cane are difficult to achieve and maintain in exterior environments. Detectable warnings complying with 4.29.2 (Detectable Warnings on Walking Surfaces) are required. This provision requires resiliency and sound-on-cane-contact only in interior applications.

Coordination of Platform and Vehicle Floor Heights 10.3.1(9)[10.3.1(10) in the SNPRM]

The final guidelines require that for rapid rail, light rail, commuter rail, intercity rail, high speed rail and automated guideway transit systems, the rail-to-platform height shall be coordinated with the floor height of new vehicles so that the vertical difference, measured when the vehicle is at rest, is within plus or minus ⅝ inch under all normal passenger load conditions. For rapid rail, light rail, commuter rail, high speed rail and intercity rail systems, the horizontal gap, measured when the new vehicle is at rest, shall be no greater than 3 inches. For automated guideway transit systems, the horizontal gap shall

be no greater than 1 inch. Two exceptions are provided:

(1) Existing vehicles operating in new stations may have a vertical difference with respect to the new platform of plus or minus 1½ inches; and

(2) In light, commuter and intercity rail systems where it is not operationally or structurally feasible to meet the horizontal gap or vertical difference requirements, mini-high platforms, car-borne or platform-mounted lifts, ramps or bridge plates, or similar manually deployed devices, meeting the applicable requirements of 36 CFR part 1192 or 49 CFR part 38 shall suffice.

Comment. Several transit operators expressed concerns about the difficulty of meeting the proposed standards for vertical and horizontal coordination of platforms and vehicle floor heights, but most related it to existing stations and vehicles. CTA said it can comply with the requirements for new vehicles on new lines but the provision should apply only to new vehicles on new systems. MBTA said that it has a 4-inch horizontal gap and a 2-inch vertical displacement allowed under state statute. The Metro-Dade Transit Authority (MDTA) said that it normally achieves a 3¼ inch horizontal gap and that a 1½ inch allowance below platform proposed in the vehicle guidelines was unsafe. SEPTA said it could achieve a 4-inch horizontal gap and a plus-or-minus 2-inch vertical displacement for existing vehicles and stations but could not achieve closer tolerances with old equipment. APTA supported the ⅝ inch vertical tolerance for rapid rail but noted that the standard could not be achieved in commuter rail operations. Amtrak said it could not achieve better than a 4-inch horizontal gap and when operating on freight rail, the gap was required to be much greater. One comment requested a clarification of "operationally feasible" in the exception.

Persons with disabilities generally supported the requirement but noted that the 3-inch gap could trap wheelchair casters, especially under crowded conditions where the caster might turn sideways. PVA reported at least four accidents related to the 3-inch gap on the Washington Metro system. Some commenters said that the vertical tolerance should be consistent with manufacturer's claims of plus-or-minus ¼ inch. Others noted that use of continuous welded rail and concrete crossties could significantly decrease sway in new construction, reducing the need for large gaps. One commenter said that the Federal Railroad Administration establishes wheel wear tolerances that would require change of wheels before significant wear occurs. Some comments pointed out that even the 1-inch gap permitted in elevators has resulted in trapped caster wheels and accidents.

Response. The Board believes that the requirements can be met where new vehicles operate in new facilities. There was general agreement, and little opposition from transit operators, on this point. The primary concern was for existing vehicles in new stations, and commuter rail.

This provision applies only to new construction. A clarification has been added that the provision applies to new vehicles operated in new stations. In the final guidelines (36 CFR part 1192) and in DOT's final regulations (49 CFR part 38) for vehicles, both published elsewhere in this issue of the **Federal Register**, there is an exception for new vehicles operated in existing stations. The exception recognizes that existing stations may not have been constructed to current tolerances and platforms may have settled and even modern pneumatic suspension vehicles may not be able to compensate. The exception has also been added to these guidelines. Further, the final guidelines for vehicles provide an exception for existing vehicles that are retrofitted to meet the requirements of the "one-car-per-train rule" under the ADA. While the ADA, in general, does not anticipate retrofitting, and such is not required, some transit operators may choose to retrofit existing vehicles because they are not planning to purchase new ones before the 1995 one-car deadline. The exception permits a 4-inch horizontal gap and a plus-or-minus 2-inch vertical displacement only for such retrofitted vehicles. The Board does not consider such displacements generally accessible but is permitting them temporarily until such vehicles are phased out. That exception, which is relevant only to existing key stations, is added to the key station requirements to be consistent with final guidelines for vehicles. These exceptions will address the major concerns of the commenters.

With respect to commuter rail, the SNPRM preamble noted that most commuter rail systems probably could not achieve the displacement tolerances specified. Therefore, the exception was included to allow other methods to be used when these tolerances cannot be met. The phrase "not operationally feasible" was intended to apply to the situation, common in commuter rail systems, when freight trains share the same track and the tolerances cannot be met because of operational considerations. In those cases, bridge plates, ramps, portable lifts, mini-high platforms, car-borne or platform-mounted lifts, or similar manually deployed devices can be used to provide accessibility. The provision does not require an operator to violate any rule or statute which specifies a set-back for freight operation. It only requires that the commuter rail operator provide some method of providing access to the cars for wheelchair and mobility aid users.

Boarding and Alighting Locations 10.3.1(10) [10.3.1(11) in the SNPRM]

This section of the final guidelines requires that stations shall not be designed or constructed so as to require persons with disabilities to board or alight from a vehicle at a location other than the one used by the general public. This provision is unchanged from the SNPRM.

Comment. Six commenters responded to this paragraph. Two individuals with disabilities and one government agency supported the provision. Two transit agencies and APTA asserted that the requirement is an operational issue and they requested an exception to clarify that double stopping is permissible in existing stations. They requested clarification that the provision does not preclude the use of mini-high platforms where their use currently may involve double stopping.

Response. This provision applies only to design of new stations. Section 10.3.2(2) (Existing Facilities: Key Stations) does not require compliance with this paragraph. The Board believes that improper placement of mini-high platforms causes double stopping and therefore an exception is not necessary. No changes were made to this provision.

Illumination Levels on Signs 10.3.1(11) [10.3.1(12) in the SNPRM]

This provision requires that illumination levels in the areas where signage is located shall be uniform and shall minimize glare on signs. Additionally, lighting along circulation routes shall be of a type and configuration to provide uniform illumination.

Comment. The SNPRM proposed that illumination levels in areas where signage is located shall comply with 4.30.8 (Illumination Levels). Also it required that lighting along accessible routes in accessible spaces shall be of a type and configuration to provide uniform illumination. No clear opposition to the provision in the SNPRM was expressed. However, twenty-five percent of the commenters, including CTA and two designers, supported a performance standard in lieu of compliance with 4.30.8

(Illumination Levels). MBTA supported specified criteria.

Response. The Board has reserved section 4.30.8 (Illumination Levels). Therefore, there are no requirements for illumination on signage. However, requirements contained in the SNPRM are offered as guidance in the appendix. This section has been modified to reflect this change. The Board believes that a performance standard requiring lighting to be of a type and configuration to provide uniform illumination is supported by the responses and is warranted in transportation facilities where illumination affects both safety and wayfinding.

Comment. The Board sought information on whether the guidelines should specify illumination levels in areas other than signage. Commenters suggested areas where illumination should be specified such as fare vending, stairs, gates, and areas of potential danger. One commenter suggested an amendment to include all circulation routes regardless of whether they are accessible routes. MTA suggested illumination levels recommended for railroad station areas by the Illuminating Engineering Society. Amtrak noted they design illumination to be 3 to 5 footcandles at train boarding and 0.5 footcandles at other places.

Response. Since stairs and other inaccessible elements may be used by persons with low vision, the Board believes that a change consistent with that suggested by commenters was warranted and supported by the Board's publication "Transit Facility Design for Persons with Visual Impairments." The provision has been modified to apply the performance standard for uniform illumination to all circulation routes within the facility.

Text Telephones 10.3.1(12) [10.3.1(13) in the SNPRM]

This provision of the final guidelines requires that when an interior public pay telephone is provided in a transit facility (as defined by DOT) at least one interior public text telephone complying with 4.31.9 (Text Telephones) shall be provided in the station. In addition, where four or more public pay telephones serve a particular entrance to a rail station and at least one is in an interior location, at least one interior public text telephone complying with 4.31.9 (Text Telephones) shall be provided to serve that entrance. Compliance with this provision constitutes compliance with 4.1.3(17)(c) (Public Telephones).

Comment. The SNPRM proposed that a text telephone be provided at each entrance where a public telephone is provided. Approximately twenty percent of the commenters opposed the provision in the SNPRM while fifty percent supported it. The remainder requested certain clarifications. BART proposes allowing flexibility of placement near entrances. BART plans to place text telephones near the station agent's booth in extension stations to minimize vandalism and misuse. Many of those opposing the provision did so because they understood the provision to require text telephones "at" each entrance if even one public pay telephone is placed anywhere in building.

Response. The Board agrees that clarification of the requirement for text telephones is warranted. The provision is changed to clarify that where interior public phones are provided in a transportation facility a minimum of one interior public text telephone is required. However, the Board believes that where circulation routes and traffic are such that four or more phones serve a particular entrance, then at least one interior public text telephone is justified serving that entrance so that persons requiring a text telephone are not required to travel substantially farther in order to locate an accessible unit. A transit agency may elect to place all telephones in one central location regardless of the number of entrances provided in which case only one text telephone is required because all telephones serve all entrances. Additionally, if more than one entrance is provided and each is served by fewer than four public pay phones, then only one text telephone is required in the facility. 4.30.7(3) (Symbols of Accessibility) requires signage adjacent to all banks of telephones that do not contain a text telephone. Such signage shall indicate the location of the nearest text telephone. Additionally, if there are no banks of telephones, directional signage indicating the location of the text telephone is required at the entrance.

Comment. The San Francisco Municipal Railroad (MUNI) requested a clarification of the term "facility" and whether or not telephones currently provided in bus shelters must have text telephones. The ABA opposes the provision for most bus terminals.

Response. Text telephones are required only in interior locations. Thus, having a public phone in a bus shelter does not trigger the requirement for a text telephone. In order to ensure that the requirements are not overly burdensome, the Board has included provisions for equivalent facilitation and applied the provisions only where interior pay phones are provided. The Board believes that public comment did not support the recommendation to exempt most bus terminals. DOT will define "transit facility."

Comment. The California Center for Law and the Deaf opposed the application of the principle of equivalent facilitation with respect to text telephones because they believe it allows a lower standard of access for persons with hearing impairments than for those with mobility impairments.

Response. The concept of "equivalent facilitation" in 2.2 (Equivalent Facilitation) applies to all sections of the guidelines. A specific example of equivalent facilitation has been incorporated in section 4.31.9 (3) (Text Telephones) which is intended to address some potential concerns with application of the concept to text telephones. A portable text telephone must be readily available, signage is required and shelves and outlets that accommodate portable text telephones must be provided. Equivalent facilitation is not an exception to the requirement, but allows for equal or greater access to be achieved through an alternative method.

Wheel Flange Gap 10.3.1(13) [10.3.1(14) in the SNPRM]

This provision of the final guidelines requires that where it is necessary to cross tracks to reach boarding platforms, the route surface shall be level and flush with the rail top at the outer edge between the rails, except for a maximum 2½ inch gap on the inner edge of each rail to permit passage of wheel flanges. Such crossings shall have a detectable warning. Where gap reduction is not feasible, an above-grade or below-grade accessible route shall be provided.

Comment. The SNPRM proposed requiring the "minimum feasible" gap on the inner edge of each rail. Additionally the SNPRM did not reference 4.29.5 (Detectable Warnings at Hazardous Vehicular Areas) in this provision. The Board asked for comment regarding the minimum width of space needed for wheel-flange clearance, and which closing devices could be specified. Also, the Board sought information regarding the potential costs.

One commenter stated that wheel flanges do not exceed 2 inches and wooden planking could be placed adjacent to the gap to reduce jolt. Another commenter indicated that rubber material has been used next to tracks at a road crossing in Wisconsin and has held up well. Amtrak, Long Island Railroad (LIRR), and Metra proposed several possible dimensions

ranging from 2 to 3 inches. All comments which addressed the issue said flange gap closers were subject to loss of elasticity, jamming with dirt, ice and snow, and could cause derailment.

Response. Information supplied by the majority of the commenters, and regulations promulgated by the Federal Railroad Administration on flange gaps, indicates that a gap of 2½ inches is reasonable. Closer gaps can be achieved under some circumstances with wood or rubber-like materials, but wood tends to splinter and wear over time creating different accessibility problems. The Board has revised this section to provide for a 2½ inch maximum gap on the inner edge of each rail.

The Board notes that the crossing is clearly a "hazardous vehicular area" within the meaning of 4.29.5 (Detectable Warnings at Hazardous Vehicular Areas) and compliance is required with that section.

Public Address Systems 10.3.1(14) [10.3.1(15) in the SNPRM]

This provision of the final guidelines requires that where public address systems are provided to convey information to the public in terminals, stations, or other fixed facilities, a means of conveying the same or equivalent information to persons with hearing loss or who are deaf shall be provided.

Comment. This provision is identical to that stated in the SNPRM. Eighty-seven percent of the commenters supported this provision and few opposed it.

MARC noted that where a public address system is controlled off site, the entire system may need to be replaced when a new station is opened. Metra recommended that this requirement be applicable only to interior stations.

Response. In response to Metra's concern regarding application of this provision to interior stations only, the Board has not limited the ways in which this information is to be provided or specified a minimum number of devices and, therefore, sees no reason that compliance could not be achieved in exterior stations. For example, this performance standard could be met if a visual system inside a locked area is made visible to the public through its windows. The cost of an information system would depend upon the complexity and sophistication of the system selected by the transportation agency.

In response to MARC's comment, not all audible information must be accessible in a visual media. For example, where audible messages such as "No Smoking" are also displayed on conventional signage, there is no requirement to present the information simultaneously in a second format. Additionally, the operator may use the public address system to notify station personnel of duty changes or telephone calls and is not required to provide this information visually to the general ridership.

Comment. The Board asked for comment as to whether this performance standard requires more specification. Thirty percent of the commenters endorsed the performance standard as sufficient in itself. The ABA noted that specification of assistive listening, light emitting diode or "flip dot" visual displays, or video monitor paging systems would not be appropriate for most small bus terminals but would be appropriate for most intercity bus terminals.

Several commenters, including the Hearing Society of San Francisco, suggested requiring electronic flowing words, otherwise known as crawling messages or visual radio. The American Foundation for the Blind (AFB) suggested use of flip dot LED should be avoided.

Response. While there is clear support for this provision, it is believed that no benefit would derive from providing technical specifications rather than a general performance standard. For example, the Board is aware of the problems associated with some flip dot systems; however, there are many types of systems and some appear to be considerably more readable than others. In the absence of supporting research, the Board does not wish to inhibit developing technologies.

Comment. Fourteen percent of the commenters suggested that visual information systems should be accompanied by public address systems or some form of personal listening device provided at consistent locations.

Response. The Board understands the concern of some of the commenters that visual systems may replace audio systems. However, the requirement for a system to provide information to persons with hearing impairments is triggered only when a public address system or some other audio system is provided.

Comment. Twenty percent of the commenters, including The California Center for Law and the Deaf, were concerned that the provision could be interpreted to mean that assistive listening systems alone would be adequate to serve the needs of all persons with hearing loss.

Response. It is not the Board's intention to suggest that an assistive listening system alone would satisfy this provision. For example, a visual paging system will assist both deaf and hard of hearing passengers, while an assistive listening system serves only a percentage of individuals who are hard of hearing. Thus, the visual paging system would meet the requirements of these guidelines, whereas the assistive listening system, by itself, would not. A visual paging system is a system that uses a visual display such as video monitors, or crawling messages conveying the same information as transmitted by an audio paging system.

Clocks 10.3.1(15) [10.3.1(16) in the SNPRM]

This provision of the final guidelines requires that where clocks are provided for use by the general public the clock face shall be uncluttered so that its elements are clearly visible. Hands, numerals, and/or digits shall contrast with the background either light-on-dark or dark-on-light. Where clocks are mounted overhead, numerals and/or digits shall comply with 4.30.3 (Character Height). Clocks shall be placed in uniform locations throughout the facility and system to the maximum extent practicable.

Comment. The SNPRM required that where clocks are provided they shall comply with 4.30.1 (General), 4.30.2 (Character Proportion), 4.30.3 (Character Height), 4.30.5 (Finish and Contrast), and 4.30.8 (Illumination Levels.). There were very few responses to this SNPRM provision. Of the few comments that were received, the majority supported the concept.

Response. The Board made several clarifying changes to this provision. The Board believes that clocks have characteristics which differ from general signage. The Board has added a requirement that the clock face be "uncluttered" to ensure that a person with low vision can see relevant parts of the clock (i.e., the hands, numerals, or digits). These elements, when superimposed over an irrevelant background such as advertising logos, become virtually invisible. On the other hand, an advertising logo which does not obstruct or overlay the clock numbers actually can be a distinctive feature which assists a person with low vision to locate the clock. Additionally, a provision was added to require clocks to be placed in uniform locations consistent with 10.3.1(4) and 10.3.1(6).

Escalators 10.3.1(16) [10.3.1(17) in the SNPRM]

This provision of the final guidelines requires that where provided in below grade stations, escalators shall have a

minimum clear width of 32 inches. At the top and bottom of each escalator run, at least two contiguous treads shall be level beyond the comb plate, before the risers begin to form. All escalator treads shall be marked by strips of clearly contrasting color, 2 inches in width, placed parallel to the nose of each step. The strip shall be of a material that is at least as slip resistant as the remainder of the tread. The edge of the tread shall be apparent from both ascending and descending directions.

Comment. The SNPRM proposed to require that where provided in subways, escalators shall have a minimum clear width of 32 inches and that two contiguous treads shall be level beyond the comb plate. Additionally, it was proposed that each tread shall have a visually contrasting band defining the edge of the tread which shall be apparent from both ascending and descending directions.

The Board sought information on any incremental costs and benefits associated with wide versus narrow escalators, especially with respect to passenger carrying capacity at the same speed.

More than fifty percent of the commenters including two transit agencies objected to transporting passengers using wheelchairs on escalators. These commenters appeared to have interpreted the provision to mean that the Board endorses the use of escalators by wheelchair users as a standard practice or in other than an emergency situation. Although no cost data was received, twenty-five percent of the commenters supported the concept of a 32 inch wide escalator.

Response. The Board wants to strongly emphasize that an escalator should not be used as an accessible route for persons using wheelchairs. However, setting a minimum 32 inch width dimension allows the use of the escalator in an emergency situation. The Board recognizes that there are times when escalators may be necessary to facilitate an emergency evacuation. While there are several emergency evacuation chairs on the market to assist persons using wheelchairs down stairways in an emergency, moving wheelchair users up stairways in an emergency either requires two to six persons to assist or the use of more expensive motorized evacuation units.

The Board further clarified this provision by deleting the reference to "subways" which was changed to "below grade stations."

Comment. In response to the provision requiring two contiguous treads to be level beyond the comb plate, twenty-three percent of the commenters supported the requirement and thirty percent asked why this provision applies only to subways. One commenter felt this mandate will require U.S. escalator manufacturers to redesign their escalators.

Response. The requirement for at least two treads to be level beyond the comb plate before the risers begin to form is a safety issue since it provides time for riders to establish sound footing before steps form. This is especially important for elderly persons and those who have difficulty walking. If necessary, it also would allow sufficient space to position a person using a wheelchair. Many new escalators are already installed with this feature, for example, all of the escalators in the Washington Metropolitan Transit Authority System (WMATA) comply with the requirement.

Comment. Fifty percent of the commenters supported the requirement for a contrasting band defining the edge of the escalator tread. One commenter felt the contrasting band should be at the nosing and should be 2" wide. Thirty percent of the commenters felt the provision was too vague to be useful and suggested additional clarifying language.

Response. The Board agrees that the provisions for tread markings require further specification to ensure visibility for persons with low vision. Consistent with commenters' suggestions, specifications have been added to require that all escalator treads shall be marked by strips of clearly contrasting color, 2 inches in width, placed parallel to and on the nose of each step. The edge of the tread shall be apparent from both ascending and descending directions. The Board also agrees with the comments that the contrasting band must be as slip resistant as the remainder of the tread and has inserted that requirement in the final guidelines.

Comment. The Board requested comments on whether the seventy percent contrast ratio in 4.30 (Signage) of the Board's proposed guidelines for buildings and facilities is appropriate for a step-edge contrasting band on escalators. A majority of the commenters responding to the SNPRM supported the proposed contrast ratio.

Response. Most of the persons who responded to the contrast ratio in the proposed guidelines for buildings and facilities objected to the provision. One primary concern was that it could not be measured or enforced under field conditions. Therefore, the seventy percent contrast ratio was placed in the appendix of the final guidelines at A4.29.2 and is advisory only.

Elevators 10.3.1(17) [10.3.1(18) in the SNPRM]

The Final Guidelines require that where provided, elevators shall be glazed or have transparent panels to allow an unobstructed view both in to and out of the car. Also, elevators are required to comply with 4.10 (Elevators). An exception is permitted where elevator cars with a clear floor area in which a 60 inch diameter circle can be inscribed may be substituted for the minimum car dimensions of 4.10 (Elevators), Fig. 22.

Comment. The Board requested comments on whether this exception should be incorporated in section 4.10 (Elevators), rather than having it apply only to transportation facilities. Slightly more than fifty percent of the commenters supported the provision as written and approximately eleven percent opposed the provision as written.

Slightly less than thirty percent of the commenters supported incorporating the exception to section 4.10 (Elevators). A few commenters supported the exception for transportation facilities but noted they would not support its inclusion in 4.10 (Elevators).

Response. In general, commenters were supportive of the exception for transit facilities. However, the Board believes that the exception should not be permitted under 4.10 (Elevators). The provision remains unchanged.

Comment. A small number of comments concerned glazed or transparent elevator panels. One commenter questioned what portion of the elevator or hoistway, or both, should be glazed. One commenter proposed the use of closed circuit television as an alternative to this requirement. One commenter felt that glazing is a safety issue and not within the Board's statutory mandate.

Response. The requirement for elevators to be glazed is derived from earlier DOT regulations implementing Section 504 of the Rehabilitation Act of 1973. According to the report of the Committee on Energy and Commerce on the Americans with Disabilities Act, "* * * readily accessible to and usable by individuals with disabilities" refers to the ability of individuals with disabilities, including individuals who use wheelchairs, to enter into, exit from, and safely and effectively use a rail passenger car or station used in public transportation." House Rept. 101–485, pt. 4, at 44.

The Board believes that the ability to see the inside of the cab before entering and the area surrounding the elevator

before exiting is essential to enable people with disabilities to safely use a transportation system. Providing a closed circuit television which is remotely monitored by a third party would not achieve this goal; glazing however, would. The Board has provided criteria that allows flexibility in design while achieving an unobstructed view which is necessary to assure safety.

Ticketing Areas 10.3.1(18) [10.3.1(19) in the SNPRM]

This provision of the final guidelines requires that, where provided, ticketing areas shall permit persons with disabilities to obtain a ticket and check baggage and shall comply with 7.2 (Sales and Service Counters, Teller Windows, Information Counters).

Comment. There was very little response to this provision. However, one commenter recommended that this section should be clarified to require only one ticket window as long as it is open at all times tickets are available.

Response. The guidelines address the design, construction and alteration of buildings and facilities. Allowing only one ticket window to be accessible contingent on the requirement that it is open at all times involves an operational issue not under the purview of the Board. However, although the SNPRM also required that counters comply with 7.2 (Sales and Service Counters, Teller Windows, Information Counters), section 7.2 has been revised and currently requires only one ticket window to be accessible.

In light of revisions made to 7.2 (Sales and Service Counters, Teller Windows, Information Counters), two minor technical changes to this provision were made. The reference to 4.3 (Accessible Route) is deleted as that section is referenced in 7.2. The reference to 4.2 (Space Allowance and Reach Ranges) was also deleted since 7.2 already addresses the issue of reach height.

Baggage Check-in 10.3.1(19) [10.3.1(20) in the SNPRM]

This provision of the final guidelines requires that, where provided, baggage check-in and retrieval systems shall be on an accessible route complying with 4.3 (Accessible Route), and shall have space immediately adjacent complying with 4.2 (Space Allowance and Reach Ranges). If unattended security barriers are provided, at least one gate shall comply with 4.13 (Doors). Gates which must be pushed open by wheelchair or mobility aid users shall have a smooth continuous surface extending from 2 inches above the floor to 27 inches above the floor.

Comment. The Board requested comments on whether other design specifications are needed for baggage claim areas. Very few comments were received regarding this provision. Of those commenting, the majority supported the provision as written. Some commenters suggested adding design specifications for the baggage check-in and retrieval equipment.

Response. This provision requires where a baggage claim area is provided, that it be on an accessible route and that the equipment be approachable. It does not impose specific requirements on the equipment itself as equipment is not generally intended to be operated by members of the public.

Comment. A commenter suggested that the gates at unattended security barriers should have a maximum 5 lbs force (5 lbf) for pushing or pulling.

Response. The provision requires that gates comply with 4.13 (Doors). Section 4.13.11 (Door Opening Force) contains a requirement that the maximum force for pushing or pulling open an interior hinged door not exceed 5 lbf.

10.3.2 Existing Facilities: Key Stations

Accessible Route 10.3.2(1)

This provision of the final guidelines requires that rapid, light and commuter rail key stations, as defined under criteria established by DOT in 49 CFR part 37, subpart C, and existing intercity rail stations shall provide at least one accessible route from an accessible entrance to those areas necessary for the use of the transportation system.

Comment. The Board requested comment on whether an accessible entrance to a key station should be required to be a specified distance from a primary entrance used by the general public. Commenters supported a variety of options. Approximately thirty percent of the commenters suggested specified distances which ranged between fifty feet and two hundred feet.

Twenty percent of the commenters, all transportation agencies, urged that no specified distance be designated because access is affected by factors like station design and existing conditions that are not under the control of the operator. Amtrak responded that a specified distance is not practical but that the distance should be the most practical possible to provide equal access. APTA opposed any distance requirements and suggested that an entrance should be accessible but latitude is necessary in a retrofit situation. One government agency recommended that the entrance should be located as close as possible to a general use entrance. The Los Angeles County Transit Commission suggested requiring entrances to a station that serves different transportation fixed routes or groups of fixed routes to be accessible; and if compliance is technically infeasible, the alteration should provide accessibility to the maximum extent feasible and all elements that can be made accessible should be. MBTA recommended allowing companion stairs to serve a common area that is served by an elevator or ramp.

Response. The Board did not receive sufficient information to support the imposition of distance criteria. Because of the unique problems associated with locating elevator hoistways and supporting equipment in existing stations, the Board does not believe that it is reasonable to require more than one accessible entrance. However, the Board recognizes the need for greater accessibility and, therefore, encourages transit agencies to make as many accessible entrances to stations as is practicable.

Accessible Route—Features 10.3.2(2)

This provision of the final guidelines requires that the accessible route required by 10.3.2(1) shall include the features specified in 10.3.1 (1), (4)–(9), (11)–(15), and (17)–(19).

Comment. Only a few comments were received relevant to this provision. Two commenters urged deletion of the provision requiring elevators to be glazed or to have transparent panels.

Response. In existing key stations, elevators which already have another means of assuring a level of safety which provide an unobstructed view both into and out of the car provides, may be regarded as satisfying this requirement by equivalent facilitation. This determination is under the purview of DOT.

Comment. A transit agency advisory committee urged that detectable warnings in key stations should not be required to be replaced if installed within the past ten years. Their position was that agencies which have voluntarily installed warnings should not be punished for cutting edge performance.

Response. In existing key stations, where detectable warnings which do not comply with 10.3.1(8) are in place, such warnings may satisfy this requirement by equivalent facilitation. This determination is under the purview of DOT.

Comment. Commenters noted that the SNPRM did not address coordination of platform and vehicle heights in key stations.

Response. This issue is addressed in 10.3.2(4) of the final guidelines which is discussed below.

Comment. The Board also requested comment on the costs and feasibility of requiring escalators that comply with 10.3.1(16) of the final guidelines (10.3.1(17) in the SNPRM). Seventy percent of the commenters opposed including this provision. Opposition was based on costs and technical infeasibility.

Response. No commenter provided the Board with feasibility or cost data. However, the Board believes that such a requirement could be extremely difficult and costly for many existing transportation facilities to achieve, therefore, existing key stations are not required to comply with 10.3.1(16) (Escalators).

Fare Collection—Unpaid Area 10.3.2(3)

This provision of the final guidelines provides that, where technical infeasibility in existing stations requires the accessible route to lead from the public way to a paid area of the transit system, an accessible fare collection system, complying with 10.3.1(7), shall be provided along such accessible route.

The Board received no comments on this provision and no changes were made from the SNPRM.

Coordination of Platform and Vehicle Floor Heights 10.3.2(4) New Section

A new provision, 10.3.2(4), has been added to the final guidelines which addresses the coordination of platforms and vehicle floors in existing key stations. This section was developed consistent with the guidelines for vehicles (published elsewhere in this issue of the **Federal Register**) to address the specific problems, including both cost and feasibility, of making these stations accessible.

In light rail, rapid rail and commuter rail key stations, the platform or a portion thereof and vehicle floor shall be coordinated so that the vertical difference, measured when the vehicle is at rest, is plus or minus 1½ inches under all normal passenger load conditions, and the horizontal gap, measured when the vehicle is at rest, is no greater than 3 inches for at least one door of each vehicle or car required to be accessible by 49 CFR part 37.

This provision acknowledges that curved platforms present unique problems. For example, vehicles are straight and, thus, with a three-door vehicle on an inside curve, the center door would have a substantially larger horizontal gap than the doors near the ends of the vehicle. Conversely, on an outside curve, the center door would be closer to the platform than the doors near the end.

The requirement for coordination can be achieved by modifying the vehicle or platform. For example, a portion of the platform at a key station might be adjusted slightly by applying a layer of tile, concrete or other material to raise it. Also, material could be added to the edge of the platform to decrease the gap at an appropriate location. The ease or difficulty of meeting the requirement at a particular station could be taken into account when the key stations is selected under criteria established by DOT.

An exception is also provided for existing vehicles retrofitted to meet the "one-car-per-train" rule. Such vehicles shall be coordinated with the platform such that, for at least one door, the vertical difference between the vehicle floor and the platform, measured when the vehicle is at rest with fifty percent normal passenger capacity, is plus or minus two inches and the horizontal gap is no greater than four inches.

Another exception provides that where it is not structurally or operationally feasible to meet the horizontal gap or vertical difference requirements, many high platforms, car-borne or platform mounted lifts, ramps or bridge plates, or similar manually deployed devices, meeting the applicable requirements of 34 CFR part 1192 (published in this edition of the **Federal Register** shall suffice).

New Direct Connections 10.3.2(5) [10.3.2(4) in the SNPRM]

This provision of the final guidelines requires that new direct connections to commercial, retail, or residential facilities shall, to the maximum extent feasible, have an accessible route complying with 4.3 (Accessible Route) from the point of connection to boarding platforms and all transportation system elements used by the public. Any elements provided to facilitate future direct connections shall be on an accessible route connecting boarding platforms and all transportation system elements used by the public.

Comment. The SNPRM proposed that new direct connections comply with new construction guidelines for such connections. The Board inquired as to what special circumstances, difficulties or costs are related to providing accessible new direct connections in existing transit facilities. APTA and CTA supported the provision. CTA requested that it be made clear that retrofit of existing connections is not required. The County of Sacramento Advisory Committee for Persons with Disabilities indicated that all connections should be accessible without regard to cost. Two transit agencies suggested that a waiver process should be established to review old facilities on a case-by-case basis. The MTA commented that the provision would discourage direct connections which would in turn not encourage the use of public transportation and would be costly.

The remainder of the comments were very similar to those received on 10.3.1(3) of the final guidelines (10.3.1(4) of the SNPRM). Commenters voiced concern regarding connections which are either beyond their control or connecting to inaccessible existing facilities.

Response. The final guidelines only require that direct connections be accessible to the maximum extent feasible. The final guidelines do not require that existing direct connections be made accessible. The final guidelines are to be applied where a new direct connection is added to a facility and only in those situations where the transit agency has control over the construction and only to the extent feasible. However, any new elements provided to facilitate future direct connections shall be on an accessible route connecting boarding platforms and all transportation system elements used by the public.

10.3.3 Existing Facilities: Alterations

This section was reserved in the SNPRM. The Final Guidelines require that for the purpose of complying with 4.1.6(2) (Alterations to an Area Containing a Primary Function), an area of primary function shall be as defined by the applicable provisions of 49 CFR 37.43(c) of DOT's ADA rule or as defined by 28 CFR 36.403 of DOJ's ADA rule.

Comment. One organization representing individuals with disabilities noted that transit stations which are altered are of particular concern to the deaf and hearing impaired community.

Response. With respect to the concerns of persons with hearing impairments and others, section 4.1.6 (Accessible Buildings: Alterations) is applicable to transit facilities. This section specifies special provisions for transit facilities only.

10.4 Airports

10.4.1 New Construction

In general, the Board received very few comments in response to this section.

Travel distances 10.4.1(1)

This provision of the final guidelines requires that travel distances, which wheelchair users and other persons who cannot negotiate steps may have to travel, are minimized as compared to the general public. Few comments were received on this provision and no changes were made.

Circulation Path 10.4.1(2)

This provision of the final guidelines requires that the circulation path used by persons with disabilities shall, to the maximum extent feasible, coincide with the circulation path for the general public.

Where the circulation path is different, directional signage complying with 4.30.1 (General), 4.30.2 (Character Proportion), 4.30.3 (Character Height), and 4.30.5 (Finish and Contrast) shall be provided which indicates the location of the nearest accessible entrance and its accessible route.

Ticketing Areas 10.4.1(3)

No comments were received specifically on this section. This provision of the final guidelines requires that the ticketing areas permit persons with disabilities to obtain a ticket and check baggage and to comply with 7.2 (Sales and Service Counters, Teller Windows, Information Counters). The reference to 4.2 (Space Allowance and Reach Ranges) in the SNPRM was deleted since reach range issues are addressed by the provisions in 7.2. The reference to 4.3 (Accessible Route) in the SNPRM was also deleted as it is already referenced in section 7.2.

Public Telephones 10.4.1(4)

This provision of the final guidelines requires that where public pay telephones are provided and at least one is in an interior location, a public text telephone shall be provided in compliance with 4.31.9. Additionally, if four or more public pay telephones are located in any of the following locations, at least one public text telephone shall also be provided in that location: (a) a main terminal outside the security areas; (b) a concourse within the security areas; or (c) a baggage claim area in a terminal.

Comment. Many commenters responding to the NPRM for buildings and facilities supported an occupancy related scoping for text telephones. Additionally, there were substantial comments by persons supporting the placement of text telephones at strategic locations in transit facilities including airports.

In response to the SNPRM, the majority of the commenters supported additional text telephones at main points of entry, ticket counters, and information and baggage pick-up areas. One commenter suggested that the guidelines require one text telephone for each airport concourse inside the security area and one for each main terminal area outside the security areas and the baggage claim areas. The commenter noted that entry to airport terminals from secure gate areas is sometimes restricted.

Response. The Board agrees that it is appropriate to require text telephones at strategic locations in airports, but only where four or more public pay telephones are provided in such locations. This additional requirement has been added to final guidelines. At a minimum, the text telephones must be located at (a) a main terminal outside the security areas; (b) a concourse within the security areas; or (c) a baggage claim area in a terminal, where four or more public pay phones are provided in such areas. Those areas identified as strategic locations are supported by commenters' concerns that telephones in different locations serve different populations for a variety of purposes.

Baggage check-in systems 10.4.1(5)

This provision of the final guidelines requires the baggage claim area to be on an accessible route and the equipment to be approachable. It does not impose a specific requirement on the equipment itself which is covered by DOT. No comments were received on this section and there were no changes to this provision from the SNPRM.

Information Systems 10.4.1(6)

This provision of the final guidelines requires that terminal information systems which broadcast information to the general public through a public address system also provide equivalent information to persons with a hearing loss or who are deaf.

Comment. One commenter expressed concern that visual systems may be provided to the detriment of audio systems. The commenter's concern was that persons with vision impairments require effective audio communication systems and, therefore, recommended that certain characteristics should be required.

Response. This provision requiring a visual system is triggered by the provision of an audible public address system. This provision does not address the characteristics of public address systems.

Comment. Other commenters supported the provision and recommended digital (LED) devices. Another commenter noted that visual display systems are already commonly used and strongly supported the provision of such systems as they would benefit the majority of persons with hearing impairments and hearing loss.

Response. While a majority of the commenters supported the concept of providing the same or equivalent information to persons who have a hearing impairment or a hearing loss, the commenters provided differing recommendations regarding the technical requirements for a system that would comply with this provision. The Board believes that a performance standard is adequate to provide access while still allowing flexibility in design and encouraging the development of new technologies.

Comment. One organization representing persons who are deaf opposed reference to assistive listening devices in this provision. They were concerned that the provision in the SNPRM could be interpreted as requiring only assistive listening devices. Such devices would not meet the needs of deaf travelers.

Response. The provision has been clarified and includes examples of how to provide the same or equivalent information to persons who are deaf or have a hearing loss. For persons who are deaf such methods may include, but are not limited to, visual paging systems using video monitors and computer technology. For persons with a hearing loss, such methods may include, but are not limited to, an assistive listening system complying with 4.33.7 (Types of Listening Systems). The Board notes that a visual system would serve both persons who are deaf and those who have a hearing loss. If such a system is provided, an assistive listening system would not be required.

Clocks 10.4.1(7) [New Section]

This provision of the final guidelines requires that, where clocks are provided for use by the general public, the clock face shall be uncluttered so that its elements are clearly visible. Hands, numerals, and/or digits shall contrast with the background either light-on-dark or dark-on-light. Where clocks are mounted overhead, numerals and/or digits shall comply with 4.30.3 (Character Height). Clocks shall be placed in uniform locations throughout the facility and system to the maximum extent practicable.

Comment. One commenter noted that 10.4 does not include a provision for

accessible clocks for persons with low vision.

Response. The Board agrees that a provision similar to that provided in 10.3 (15) of the final guidelines is justified. Such a provision has been added.

[Security Systems] 10.4.1(8) Reserved

Comment. This section was reserved in the SNPRM for airport security systems. The Board sought comment in the SNPRM relating to elements of security systems that should be addressed in these guidelines.

The majority of commenters felt that the Federal Aviation Authority and DOT should address this issue. One commenter noted that airport security systems are movable equipment and believed that access problems for persons with disabilities can be addressed through operational procedures. Another commenter was concerned that security systems tend to obstruct the required accessible route.

Response. The Board agrees that security systems may not obstruct an accessible route. However, insofar as they are movable equipment, any such equipment is not appropriately addressed in these guidelines. Where security systems are permanently fixed, they may not obstruct the required accessible route. Responses from commenters were insufficient to assist the Board in establishing technical requirements for security systems at this time. However, the Board reserves this section for future revisions to the guidelines.

10.4.2 Existing Airports

10.4.2(1) Accessible Route

The SNPRM provided that existing airports shall have at least one accessible route from an accessible entrance to those areas in which each carrier conducted activities related to the provision of air transportation. No comments were received specifically on this section. The Board has deleted this section from the final guidelines as it will be addressed by DOT in its regulations implementing section 504 of the Rehabilitation Act (49 CFR part 27) and the Air Carriers Access Act (49 CFR part 382).

Accessible Routes—Features and Accessible Restrooms 10.4.2(2)

This SNPRM provided that the accessible route required by 10.4.2(1) shall include the features specified in 10.4.1 and at least one accessible restroom for each sex, or one unisex restroom, complying with the applicable provisions of 4.22 (Toilet Rooms) and 4.23 (Bathrooms, Bathing Facilities, and Shower Rooms).

Comment. One commenter supported the provision for a unisex restroom. Another commenter suggested that the Board require the "standard" stall as a minimum, and not allow the alternate stall, unless both are required.

Response. The Board has deleted this section from the final guidelines as it will be addressed by DOT in its regulations implementing section 504 of the Rehabilitation Act (49 CFR part 27) and the Air Carriers Access Act (49 CFR part 382).

10.5 Boat and Ferry Docks (Reserved)

This section is reserved in the final guidelines.

Comment. The Board requested examples of accessibility features for boat and ferry docks. Additionally, the Board solicited comment on what gangplank slope can reasonably be assured under varying tide conditions. The Board also asked how to protect elevators from salt and water corrosion. Lastly, the Board requested information regarding slip resistance on gangplanks.

Response. A few commenters responded to the Board's questions. However, the Board feels more information is needed to adequately address this complex issue. Pending further research, the Board has reserved this section.

Regulatory Process Matters

These guidelines amend the final ADA accessibility guidelines for buildings and facilities published in the **Federal Register** on July 26, 1991 (56 FR 35408) by adding additional provisions for publicly and privately operated transportation facilities that are required to be accessible by titles II and III of the ADA. The regulations issued by the Department of Justice and Department of Transportation for purposes of titles II and III of the ADA must be consistent with the Board's guidelines. The guidelines thus meet the criteria for a major rule under Executive Order 12291 and have been reviewed by the Office of Management and Budget.

The Board has prepared a draft final regulatory impact analysis (RIA) for final ADA accessibility guidelines for buildings and facilities and has prepared an addendum to that document based on these amendments to the guidelines. The draft final RIA and addendum are available for public comment. The public is encouraged to provide additional information as to the costs and benefits associated with the guidelines and amendments. Comments on costs and benefits that are received within 60 days of publication of these amendments will be analyzed in the final RIA which will be completed by January 1, 1992.

The majority of transportation facilities are designed and constructed by public entities which are currently covered by Section 504 of the Rehabilitation Act of 1973. That statute prohibits discrimination on the basis of disability by recipients of federal financial assistance and implementing regulations generally require that covered entities comply with the Uniform Federal Accessibility Standards (UFAS) when constructing or altering buildings and facilities. In addition, most transportation facilities are covered by State accessibility codes and standards. Therefore, the addendum to the draft final RIA addresses those proposed accessibility elements which are in addition to existing requirements or practice and which are different or marginally more costly. Included in the analysis were: accessible fare gates; accessible boarding (mini-high platforms, portable lifts); public information systems (visual paging systems, moving light emitting diode (LED) displays); direct connections (elevators); detectable warnings at boarding platforms; and text telephones. Costs were also analyzed for accessibility elements under section 4 of the final guidelines published in the **Federal Register** on July 26, 1991, which have the potential of adding to the cost of transportation facilities.

The draft final RIA also contains information that would be included in a final regulatory flexibility analysis under the Regulatory Flexibility Act and the RIA will serve as the final regulatory flexibility analysis.

The Department of Transportation has also prepared an RIA for its final regulations which discusses the federalism impact of the transportation accessibility requirements of the ADA.

List of Subjects in 36 CFR Part 1191

Buildings, Civil rights, Handicapped, Individuals with disabilities.

Authorized by vote of the Board on July 3, 1991, and August 26, 1991.

William H. McCabe,

Chairman, Architectural and Transportation Barriers Compliance Board.

For the reasons set forth in the preamble, part 1191 of title 36 of the Code of Federal Regulations is amended as follows:

PART 1191—AMERICANS WITH DISABILITIES ACT (ADA) ACCESSIBILITY GUIDELINES FOR BUILDINGS AND FACILITIES

1. The authority citation for 36 CFR part 1191 is revised to read as follows:

Authority: Americans with Disabilities Act of 1990, Pub. L. 101–336, 104 Stat. 370 (42 U.S.C. 12204).

2. Section 1191.1 is revised to read as follows:

§ 1191.1 Accessibility guidelines.

The accessibility guidelines for buildings and facilities for purposes of the Americans with Disabilities Act are found in the Appendix to this part. The guidelines are issued to assist the Department of Justice and Department of Transportation to establish accessibility standards to implement the legislation.

3. The appendix to part 1191 is amended by revising the first paragraph of section 1. Page 1 of the appendix is republished with the revision as set forth below.

Appendix to Part 1191—Americans With Disabilities Act (ADA) Accessibility Guidelines for Buildings and Facilities

* * * * *

BILLING CODE 8150–01–M

1. PURPOSE.

This document sets guidelines for accessibility to buildings and facilities by individuals with disabilities under the Americans with Disabilities Act (ADA) of 1990. These guidelines are to be applied during the design, construction, and alteration of buildings and facilities covered by Titles II and III of the ADA to the extent required by regulations issued by Federal agencies, including the Department of Justice and the Department of Transportation, under the ADA.

The technical specifications 4.2 through 4.35, of these guidelines are the same as those of the American National Standard Institute's document A117.1-1980, except as noted in this text by italics. However, sections 4.1.1 through 4.1.7 and sections 5 through 10 are different from ANSI A117.1 in their entirety and are printed in standard type.

The illustrations and text of ANSI A117.1 are reproduced with permission from the American National Standards Institute. Copies of the standard may be purchased from the American National Standards Institute at 1430 Broadway, New York, New York 10018.

2. GENERAL.

2.1 Provisions for Adults. *The specifications in these guidelines are based upon adult dimensions and anthropometrics.*

2.2* Equivalent Facilitation. *Departures from particular technical and scoping requirements of this guideline by the use of other designs and technologies are permitted where the alternative designs and technologies used will provide substantially equivalent or greater access to and usability of the facility.*

3. MISCELLANEOUS INSTRUCTIONS AND DEFINITIONS.

3.1 Graphic Conventions. Graphic conventions are shown in Table 1. Dimensions that are not marked minimum or maximum are absolute, unless otherwise indicated in the text or captions.

Table 1
Graphic Conventions

Convention	Description
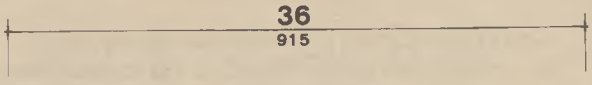	Typical dimension line showing U.S. customary units (in inches) above the line and SI units (in millimeters) below
	Dimensions for short distances indicated on extended line
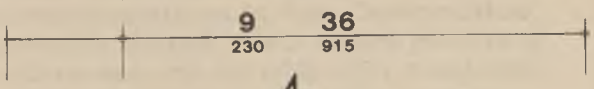	Dimension line showing alternate dimensions required
	Direction of approach
max	Maximum
min	Minimum
.....	Boundary of clear floor area
— — — — — ℄	Centerline

BILLING CODE 8150-01-C

4. The appendix to part 1191 is amended by adding a new secton 10. Page 67 of the appendix is republished with the addition included and new pages beginning with page 68 are set forth below.

Appendix to Part 1191—Americans With Disabilities Act (ADA) Accessibility Guidelines for Buildings and Facilities

* * * * *

BILLING CODE 8150-01-M

(a) at least one public entrance shall allow a person with mobility impairments to approach, enter and exit including a minimum clear door width of 32 in (815 mm).

(b) sleeping space for homeless persons as provided in the scoping provisions of 9.1.2 shall include doors to the sleeping area with a minimum clear width of 32 in (815 mm) and maneuvering space around the beds for persons with mobility impairments complying with 9.2.2(1).

(c) at least one toilet room for each gender or one unisex toilet room shall have a minimum clear door width of 32 in (815 mm), minimum turning space complying with 4.2.3, one water closet complying with 4.16, one lavatory complying with 4.19 and the door shall have a privacy latch; and, if provided, at least one tub or shower shall comply with 4.20 or 4.21, respectively.

(d) at least one common area which a person with mobility impairments can approach, enter and exit including a minimum clear door width of 32 in (815 mm).

(e) at least one route connecting elements (a), (b), (c) and (d) which a person with mobility impairments can use including minimum clear width of 36 in (915 mm), passing space complying with 4.3.4, turning space complying with 4.2.3 and changes in levels complying with 4.3.8.

(f) homeless shelters can comply with the provisions of (a)-(e) by providing the above elements on one accessible floor.

9.5.3. Accessible Sleeping Accommodations in New Construction. Accessible sleeping rooms shall be provided in conformance with the table in 9.1.2 and shall comply with 9.2 Accessible Units, Sleeping Rooms and Suites (where the items are provided). Additional sleeping rooms that comply with 9.3 Sleeping Accommodations for Persons with Hearing Impairments shall be provided in conformance with the table provided in 9.1.3.

In facilities with multi-bed rooms or spaces, a percentage of the beds equal to the table provided in 9.1.2 shall comply with 9.2.2(1).

10. TRANSPORTATION FACILITIES.

10.1 General. Every station, bus stop, bus stop pad, terminal, building or other transportation facility, shall comply with the applicable provisions of 4.1 through 4.35, sections 5 through 9, and the applicable provisions of this section. The exceptions for elevators in 4.1.3(5), exception 1 and 4.1.6(1)(k) do not apply to a terminal, depot, or other station used for specified public transportation, or an airport passenger terminal, or facilities subject to Title II.

10.2 Bus Stops and Terminals.

10.2.1 New Construction.

(1) Where new bus stop pads are constructed at bus stops, bays or other areas where a lift or ramp is to be deployed, they shall have a firm, stable surface; a minimum clear length of 96 inches (measured from the curb or vehicle roadway edge) and a minimum clear width of 60 inches (measured parallel to the vehicle roadway) to the maximum extent allowed by legal or site constraints; and shall be connected to streets, sidewalks or pedestrian paths by an accessible route complying with 4.3 and 4.4. The slope of the pad parallel to the roadway shall, to the extent practicable, be the same as the roadway. For water drainage, a maximum slope of 1:50 (2%) perpendicular to the roadway is allowed.

(2) Where provided, new or replaced bus shelters shall be installed or positioned so as to permit a wheelchair or mobility aid user to enter from the public way and to reach a location, having a minimum clear floor area of 30 inches by 48 inches, entirely within the perimeter of the shelter. Such shelters shall be connected by an accessible route to the boarding area provided under paragraph (1) of this section.

(3) Where provided, all new bus route identification signs shall comply with 4.30.5. In addition, to the maximum extent practicable, all new bus route identification signs shall comply with 4.30.2 and 4.30.3. Signs

10.3 Fixed Facilities and Stations

that are sized to the maximum dimensions permitted under legitimate local, state or federal regulations or ordinances shall be considered in compliance with 4.30.2 and 4.30.3 for purposes of this section.

EXCEPTION: Bus schedules, timetables, or maps that are posted at the bus stop or bus bay are not required to comply with this provision.

10.2.2 Bus Stop Siting and Alterations.

(1) Bus stop sites shall be chosen such that, to the maximum extent practicable, the areas where lifts or ramps are to be deployed comply with section 10.2.1(1) and (2).

(2) When new bus route identification signs are installed or old signs are replaced, they shall comply with the requirements of 10.2.1(3).

10.3 Fixed Facilities and Stations.

10.3.1 New Construction. New stations in rapid rail, light rail, commuter rail, intercity bus, intercity rail, high speed rail, and other fixed guideway systems (e.g., automated guideway transit, monorails, etc.) shall comply with the following provisions, as applicable:

(1) Elements such as ramps, elevators or other circulation devices, fare vending or other ticketing areas, and fare collection areas shall be placed to minimize the distance which wheelchair users and other persons who cannot negotiate steps may have to travel compared to the general public. The circulation path, including an accessible entrance and an accessible route, for persons with disabilities shall, to the maximum extent practicable, coincide with the circulation path for the general public. Where the circulation path is different, signage complying with 4.30.1, 4.30.2, 4.30.3, 4.30.5, and 4.30.7(1) shall be provided to indicate direction to and identify the accessible entrance and accessible route.

(2) In lieu of compliance with 4.1.3(8), at least one entrance to each station shall comply with 4.14, Entrances. If different entrances to a station serve different transportation fixed routes or groups of fixed routes, at least one entrance serving each group or route shall comply with 4.14, Entrances. All accessible entrances shall, to the maximum extent practicable, coincide with those used by the majority of the general public.

(3) Direct connections to commercial, retail, or residential facilities shall have an accessible route complying with 4.3 from the point of connection to boarding platforms and all transportation system elements used by the public. Any elements provided to facilitate future direct connections shall be on an accessible route connecting boarding platforms and all transportation system elements used by the public.

(4) Where signs are provided at entrances to stations identifying the station or the entrance, or both, at least one sign at each entrance shall comply with 4.30.4 and 4.30.6. Such signs shall be placed in uniform locations at entrances within the transit system to the maximum extent practicable.

EXCEPTION: Where the station has no defined entrance, but signage is provided, then the accessible signage shall be placed in a central location.

(5) Stations covered by this section shall have identification signs complying with 4.30.1, 4.30.2, 4.30.3, and 4.30.5. Signs shall be placed at frequent intervals and shall be clearly visible from within the vehicle on both sides when not obstructed by another train. When station identification signs are placed close to vehicle windows (i.e., on the side opposite from boarding) each shall have the top of the highest letter or symbol below the top of the vehicle window and the bottom of the lowest letter or symbol above the horizontal mid-line of the vehicle window.

(6) Lists of stations, routes, or destinations served by the station and located on boarding areas, platforms, or mezzanines shall comply with 4.30.1, 4.30.2, 4.30.3, and 4.30.5. A minimum of one sign identifying the specific station and complying with 4.30.4 and 4.30.6 shall be provided on each platform or boarding area. All signs referenced in this paragraph shall, to the maximum extent practicable, be placed in uniform locations within the transit system.

(7)* Automatic fare vending, collection and adjustment (e.g., add-fare) systems shall comply with 4.34.2, 4.34.3, and 4.34.4. At each accessible entrance such devices shall be located on an accessible route. If self-service fare collection devices are provided for the use of the general public, at least one accessible device for entering, and at least one for exiting, unless one device serves both functions, shall be provided at each accessible point of entry or exit. Accessible fare collection devices shall have a minimum clear opening width of 32 inches; shall permit passage of a wheelchair; and, where provided, coin or card slots and controls necessary for operation shall comply with 4.27. Gates which must be pushed open by wheelchair or mobility aid users shall have a smooth continuous surface extending from 2 inches above the floor to 27 inches above the floor and shall comply with 4.13. Where the circulation path does not coincide with that used by the general public, accessible fare collection systems shall be located at or adjacent to the accessible point of entry or exit.

(8) Platform edges bordering a drop-off and not protected by platform screens or guard rails shall have a detectable warning. Such detectable warnings shall comply with 4.29.2 and shall be 24 inches wide running the full length of the platform drop-off.

(9) In stations covered by this section, rail-to-platform height in new stations shall be coordinated with the floor height of new vehicles so that the vertical difference, measured when the vehicle is at rest, is within plus or minus 5/8 inch under normal passenger load conditions. For rapid rail, light rail, commuter rail, high speed rail, and intercity rail systems in new stations, the horizontal gap, measured when the new vehicle is at rest, shall be no greater than 3 inches. For slow moving automated guideway "people mover" transit systems, the horizontal gap in new stations shall be no greater than 1 inch.

EXCEPTION 1: Existing vehicles operating in new stations may have a vertical difference with respect to the new platform within plus or minus 1-1/2 inches.

EXCEPTION 2: In light rail, commuter rail and intercity rail systems where it is not operationally or structurally feasible to meet the horizontal gap or vertical difference requirements, mini-high platforms, car-borne or platform-mounted lifts, ramps or bridge plates, or similar manually deployed devices, meeting the applicable requirements of 36 CFR part 1192, or 49 CFR part 38 shall suffice.

(10) Stations shall not be designed or constructed so as to require persons with disabilities to board or alight from a vehicle at a location other than one used by the general public.

(11) Illumination levels in the areas where signage is located shall be uniform and shall minimize glare on signs. Lighting along circulation routes shall be of a type and configuration to provide uniform illumination.

(12) Text Telephones: The following shall be provided in accordance with 4.31.9:

(a) If an interior public pay telephone is provided in a transit facility (as defined by the Department of Transportation) at least one interior public text telephone shall be provided in the station.

(b) Where four or more public pay telephones serve a particular entrance to a rail station and at least one is in an interior location, at least one interior public text telephone shall be provided to serve that entrance. Compliance with this section constitutes compliance with section 4.1.3(17)(c).

(13) Where it is necessary to cross tracks to reach boarding platforms, the route surface shall be level and flush with the rail top at the outer edge and between the rails, except for a maximum 2-1/2 inch gap on the inner edge of each rail to permit passage of wheel flanges. Such crossings shall comply with 4.29.5. Where gap reduction is not practicable, an above-grade or below-grade accessible route shall be provided.

(14) Where public address systems are provided to convey information to the public in terminals, stations, or other fixed facilities, a means of conveying the same or equivalent information to persons with hearing loss or who are deaf shall be provided.

10.3.2 Existing Facilities: Key Stations.

(15) Where clocks are provided for use by the general public, the clock face shall be uncluttered so that its elements are clearly visible. Hands, numerals, and/or digits shall contrast with the background either light-on-dark or dark-on-light. Where clocks are mounted overhead, numerals and/or digits shall comply with 4.30.3. Clocks shall be placed in uniform locations throughout the facility and system to the maximum extent practicable.

(16) Where provided in below grade stations, escalators shall have a minimum clear width of 32 inches. At the top and bottom of each escalator run, at least two contiguous treads shall be level beyond the comb plate before the risers begin to form. All escalator treads shall be marked by a strip of clearly contrasting color, 2 inches in width, placed parallel to and on the nose of each step. The strip shall be of a material that is at least as slip resistant as the remainder of the tread. The edge of the tread shall be apparent from both ascending and descending directions.

(17) Where provided, elevators shall be glazed or have transparent panels to allow an unobstructed view both in to and out of the car. Elevators shall comply with 4.10.

EXCEPTION: Elevator cars with a clear floor area in which a 60 inch diameter circle can be inscribed may be substituted for the minimum car dimensions of 4.10, Fig. 22.

(18) Where provided, ticketing areas shall permit persons with disabilities to obtain a ticket and check baggage and shall comply with 7.2.

(19) Where provided, baggage check-in and retrieval systems shall be on an accessible route complying with 4.3, and shall have space immediately adjacent complying with 4.2. If unattended security barriers are provided, at least one gate shall comply with 4.13. Gates which must be pushed open by wheelchair or mobility aid users shall have a smooth continuous surface extending from 2 inches above the floor to 27 inches above the floor.

10.3.2 Existing Facilities: Key Stations.

(1) Rapid, light and commuter rail key stations, as defined under criteria established by the Department of Transportation in subpart C of 49 CFR part 37 and existing intercity rail stations shall provide at least one accessible route from an accessible entrance to those areas necessary for use of the transportation system.

(2) The accessible route required by 10.3.2(1) shall include the features specified in 10.3.1 (1), (4)-(9), (11)-(15), and (17)-(19).

(3) Where technical infeasibility in existing stations requires the accessible route to lead from the public way to a paid area of the transit system, an accessible fare collection system, complying with 10.3.1(7), shall be provided along such accessible route.

(4) In light rail, rapid rail and commuter rail key stations, the platform or a portion thereof and the vehicle floor shall be coordinated so that the vertical difference, measured when the vehicle is at rest, within plus or minus 1-1/2 inches under all normal passenger load conditions, and the horizontal gap, measured when the vehicle is at rest, is no greater than 3 inches for at least one door of each vehicle or car required to be accessible by 49 CFR part 37.

EXCEPTION 1: Existing vehicles retrofitted to meet the requirements of 49 CFR 37.93 (one-car-per-train rule) shall be coordinated with the platform such that, for at least one door, the vertical difference between the vehicle floor and the platform, measured when the vehicle is at rest with 50% normal passenger capacity, is within plus or minus 2 inches and the horizontal gap is no greater than 4 inches.

EXCEPTION 2: Where it is not structurally or operationally feasible to meet the horizontal gap or vertical difference requirements, mini-high platforms, car-borne or platform mounted lifts, ramps or bridge plates, or similar manually deployed devices, meeting the applicable requirements of 36 CFR Part 1192 shall suffice.

(5) New direct connections to commercial, retail, or residential facilities shall, to the maximum extent feasible, have an accessible route complying with 4.3 from the point of connection to boarding platforms and all transportation system elements used by the public. Any elements provided to facilitate future direct connections shall be on an accessible route connecting boarding platforms and all transportation system elements used by the public.

10.3.3 Existing Facilities: Alterations.

(1) For the purpose of complying with 4.1.6(2) Alterations to an Area Containing a Primary Function, an area of primary function shall be as defined by applicable provisions of 49 CFR 37.43(c) (Department of Transportation's ADA Rule) or 28 CFR 36.403 (Department of Justice's ADA Rule).

10.4. Airports.

10.4.1 New Construction.

(1) Elements such as ramps, elevators or other vertical circulation devices, ticketing areas, security checkpoints, or passenger waiting areas shall be placed to minimize the distance which wheelchair users and other persons who cannot negotiate steps may have to travel compared to the general public.

(2) The circulation path, including an accessible entrance and an accessible route, for persons with disabilities shall, to the maximum extent practicable, coincide with the circulation path for the general public. Where the circulation path is different, directional signage complying with 4.30.1, 4.30.2, 4.30.3 and 4.30.5 shall be provided which indicates the location of the nearest accessible entrance and its accessible route.

(3) Ticketing areas shall permit persons with disabilities to obtain a ticket and check baggage and shall comply with 7.2.

(4) Where public pay telephones are provided, and at least one is at an interior location, a public text telephone shall be provided in compliance with 4.31.9. Additionally, if four or more public pay telephones are located in any of the following locations, at least one public text telephone shall also be provided in that location:

(a) a main terminal outside the security areas;
(b) a concourse within the security areas; or
(c) a baggage claim area in a terminal.

Compliance with this section constitutes compliance with section 4.1.3(17)(c).

(5) Baggage check-in and retrieval systems shall be on an accessible route complying with 4.3, and shall have space immediately adjacent complying with 4.2.4. If unattended security barriers are provided, at least one gate shall comply with 4.13. Gates which must be pushed open by wheelchair or mobility aid users shall have a smooth continuous surface extending from 2 inches above the floor to 27 inches above the floor.

(6) Terminal information systems which broadcast information to the general public through a public address system shall provide a means to provide the same or equivalent information to persons with a hearing loss or who are deaf. Such methods may include, but are not limited to, visual paging systems using video monitors and computer technology. For persons with certain types of hearing loss such methods may include, but are not limited to, an assistive listening system complying with 4.33.7.

(7) Where clocks are provided for use by the general public the clock face shall be uncluttered so that its elements are clearly visible. Hands, numerals, and/or digits shall contrast with their background either light-on-dark or dark-on-light. Where clocks are mounted overhead, numerals and/or digits shall comply with 4.30.3. Clocks shall be placed in uniform locations throughout the facility to the maximum extent practicable.

(8) Security Systems. [Reserved]

10.5 Boat and Ferry Docks.
[Reserved]

5. In part 1191, the appendix to the appendix is amended by adding a new section A10.3. Page A17 of the appendix to the appendix is republished with the addition included as set forth below.

Appendix to Part 1191—Americans With Disabilities Act (ADA) Accessibility Guidelines for Buildings and Facilities

* * * * *

Appendix

* * * * *

BILLING CODE 8150-01-M

A4.33.6 Placement of Listening Systems. A distance of 50 ft (15 m) allows a person to distinguish performers' facial expressions.

A4.33.7 Types of Listening Systems. *An assistive listening system appropriate for an assembly area for a group of persons or where the specific individuals are not known in advance, such as a playhouse, lecture hall or movie theater, may be different from the system appropriate for a particular individual provided as an auxiliary aid or as part of a reasonable accommodation. The appropriate device for an individual is the type that individual can use, whereas the appropriate system for an assembly area will necessarily be geared toward the "average" or aggregate needs of various individuals.* A listening system that can be used from any seat in a seating area is the most flexible way to meet this specification. Earphone jacks with variable volume controls can benefit only people who have slight hearing loss and do not help people who use hearing aids. At the present time, *magnetic induction* loops are the most feasible type of listening system for people who use hearing aids *equipped with "T-coils,"* but people without hearing aids or those with hearing aids not equipped with inductive pick-ups cannot use them *without special receivers.* Radio frequency systems can be extremely effective and inexpensive. People without hearing aids can use them, but people with hearing aids need a special receiver to use them as they are presently designed. If hearing aids had a jack to allow a by-pass of microphones, then radio frequency systems would be suitable for people with and without hearing aids. Some listening systems may be subject to interference from other equipment and feedback from hearing aids of people who are using the systems. Such interference can be controlled by careful engineering design that anticipates feedback sources in the surrounding area.

Table A2, reprinted from a National Institute of Disability and Rehabilitation Research "Rehab Brief," shows some of the advantages and disadvantages of different types of assistive listening systems. In addition, the Architectural and Transportation Barriers Compliance Board (Access Board) has published a pamphlet on Assistive Listening Systems which lists demonstration centers across the country where technical assistance can be obtained in selecting and installing appropriate systems. The state of New York has also adopted a detailed technical specification which may be useful.

A5.0 Restaurants and Cafeterias.

A5.1 General. *Dining counters (where there is no service) are typically found in small carry-out restaurants, bakeries, or coffee shops and may only be a narrow eating surface attached to a wall. This section requires that where such a dining counter is provided, a portion of the counter shall be at the required accessible height.*

A7.0 Business and Mercantile.

A7.2(3) Assistive Listening Devices. *At all sales and service counters, teller windows, box offices, and information kiosks where a physical barrier separates service personnel and customers, it is recommended that at least one permanently installed assistive listening device complying with 4.33 be provided at each location or series. Where assistive listening devices are installed, signage should be provided identifying those stations which are so equipped.*

A7.3 Check-out Aisles. *Section 7.2 refers to counters without aisles; section 7.3 concerns check-out aisles. A counter without an aisle (7.2) can be approached from more than one direction such as in a convenience store. In order to use a check-out aisle (7.3), customers must enter a defined area (an aisle) at a particular point, pay for goods, and exit at a particular point.*

A10.3 Fixed Facilities and Stations.

A10.3.1(7) Route Signs. *One means of making control buttons on fare vending machines usable by persons with vision impairments is to raise them above the surrounding surface. Those activated by a mechanical motion are likely to be more detectable. If farecard vending, collection, and adjustment devices are designed to accommodate farecards having one tactually distinctive corner, then a person who has a vision impairment will insert the card with greater ease. Token collection devices that are designed to accommodate tokens which are perforated can allow a person to distinguish more readily between tokens and common coins. Thoughtful placement of accessible gates and fare vending machines in relation to inaccessible devices will make their use and detection easier for all persons with disabilities.*

[FR Doc 91-20797 Filed 9-5-91; 8:45 am]
BILLING CODE 8150-01-C

federal register

Friday
September 6, 1991

Part III

Architectural and Transportation Barriers Compliance Board

36 CFR Part 1192

Americans With Disabilities Act (ADA) Accessibility Guidelines for Transportation Vehicles; Final Guidelines

ARCHITECTURAL AND TRANSPORTATION BARRIERS COMPLIANCE BOARD

36 CFR Part 1192

[Docket No. 90-3]

RIN 3014-AA09

Americans With Disabilities Act (ADA) Accessibility Guidelines for Transportation Vehicles

AGENCY: Architectural and Transportation Barriers Compliance Board.

ACTION: Final guidelines.

SUMMARY: The Architectural and Transportation Barriers Compliance Board is issuing final guidelines to assist the Department of Transportation to establish accessibility standards for transportation vehicles, as required by titles II and III of the Americans with Disabilities Act (ADA) of 1990. The guidelines will ensure that transportation vehicles covered by titles II and III of the ADA are readily accessible to and usable by individuals with disabilities in terms of architecture and design, transportation, and communication. The Department of Transportation has proposed to adopt the guidelines as the accessibility standards for transportation vehicles for purposes of titles II and III of the ADA.

EFFECTIVE DATE: September 6, 1991.

FOR FURTHER INFORMATION CONTACT: James Raggio, Office of the General Counsel, Architectural and Transportation Barriers Compliance Board, 1111 18th Street NW., Suite 501, Washington, DC 20036. Telephone (202) 653-7834 (Voice/TDD). This is not a toll-free number. This document is available in accessible formats (cassette tape, braille, large print, or computer disc) upon request.

SUPPLEMENTARY INFORMATION:

Statutory Background

The Americans with Disabilities Act (ADA) of 1990 extends to individuals with disabilities comprehensive civil rights protections similar to those provided to persons on the basis of race, sex, national origin, and religion under the Civil Rights Act of 1964. Title II of the ADA prohibits discrimination on the basis of disability in services, programs, and activities provided by public entities, including units of State and local government and the National Railroad Passenger Corporation (Amtrak). Title II contains provisions for making fixed route bus, rapid rail, light rail, commuter rail, and intercity rail systems operated by public entities, and persons under contract with such entities, readily accessible to and usable by individuals with disabilities, including individuals who use wheelchairs. Title II specifically requires that:

- New vehicles purchased or leased after August 25, 1990 must be accessible. See 42 U.S.C. 12141 note, 12142(a), 12161 note, and 12162 (a)(2) and (b)(2).
- If used vehicles are purchased or leased after August 25, 1990, good faith efforts must be made to obtain accessible vehicles. See 42 U.S.C. 12141 note, 12142(b), 12161 note, and 12162(c). See also 49 CFR 37.23, 37.53, and 37.83.
- If vehicles are remanufactured after August 25, 1990 to extend their useful life for 5 years or more in the case of buses and rapid rail and light rail vehicles, or for 10 years or more in the case of commuter rail and intercity rail passenger cars, then the vehicles must be made accessible to the maximum extent feasible. See 42 U.S.C. 12141 note, 12142(c), 12161 note, and 12162(d).
- At least one vehicle per train must be accessible as soon as practicable but in no event later than July 26, 1995 in the case of rapid rail, light rail (where 2 or more vehicles operate as a train), commuter rail, and intercity rail systems. See 42 U.S.C. 12141 note, 12148(b), 12161 note, and 12162 (a)(1) and (b)(1). Intercity rail trains must also provide a number of spaces to park a wheelchair and a number of transfer seats with spaces to store a folding wheelchair that is equal to 50% of the number of single level coach cars in the train by July 26, 1995, and equal to 100% of the number of single level coach cars in the train by July 26, 2000. See 42 U.S.C. 12142(a)(3).

Title II also requires that new vehicles purchased or leased after August 25, 1990 for use in a demand responsive system operated by a public entity, or person under contract with such an entity, must be accessible unless the system, when viewed in its entirety, provides to individuals with disabilities a level of service equivalent to that provided to the general public. See 42 U.S.C. 12141 note, and 12144. Title II further requires public entities that operate a fixed route bus, rapid rail, or light rail system (other than a system which provides solely commuter bus service) to provide paratransit and other special transportation services to individuals with disabilities, beginning January 26, 1992, to the extent that providing such services would not impose an undue financial burden. See 42 U.S.C. 12141 note, and 12143.

Title III of the ADA prohibits discrimination on the basis of disability by private entities in places of public accommodation and contains provisions for making transportation services (other than by aircraft) operated by such entities readily accessible to and usable by individuals with disabilities, including individuals who use wheelchairs. In the case of private entities that are not primarily engaged in the business of transporting people such as hotels, shopping centers and recreational facilities which operate shuttle service for their customers and patrons and whose operations affect commerce, title III specifically requires that:

- New vehicles with a seating capacity in excess of 16 passengers (other than an over-the-road bus) purchased or leased after August 25, 1990 for use in a fixed route system must be accessible. See 42 U.S.C. 12181 note, and 12182(b)(2)(B)(i).
- New vehicles with a seating capacity of 16 passengers or less purchased or leased after August 25, 1990 for use in a fixed route system must be accessible unless the system, when viewed in its entirety, ensures to individuals with disabilities a level of service equivalent to that provided to the general public. See 42 U.S.C 12181 note, and 12182(b)(2)(B)(ii).
- A demand responsive system must be operated in such a manner after July 26, 1990 that, when viewed on its entirety, the system ensures to individuals with disabilities a level of service equivalent to that provided to the general public. See 42 U.S.C. 12181 note, and 12182(b)(2)(C)(i).
- New vehicles with a seating capacity in excess of 16 passengers (other than an over-the-road bus) purchased or leased after August 25, 1990 for use in a demand responsive system must be accessible unless the system, when viewed in its entirety, ensures to individuals with disabilities a level of service equivalent to that provided to the general public. See 42 U.S.C. 12181 note, and 12182(b)(2)(c)(ii).

In the case of private entities that are primarily engaged in the business of transporting people and whose operations affect commerce, title III specifically requires that:

- New vehicles (other than an automobile, a van with a seating capacity of less than 8 passengers, or an over-the-road bus) purchased or leased after August 25, 1990 must be accessible, unless the vehicle is to be used solely in a demand responsive system that, when viewed in its entirety, provides to individuals with disabilities a level of service equivalent to that provided to the general public. See 42 U.S.C. 12181 note, and 12184(b)(3).

• New vans with a seating capacity of less than 8 passengers purchased or leased after February 25, 1992 must be accessible, unless the system for which the van is being purchased or leased, when viewed in its entirety, provides to individuals with disabilities a level of service equivalent to that provided to the general public. See 42 U.S.C. 12181 note, and 12184(b)(5).

• New rail passenger cars purchased or leased after February 25, 1992 must be accessible. See 42 U.S.C. 12181 note, and 12184(b)(6).

• If rail passenger cars are remanufactured after February 25, 1992 to extend their useful life for 10 years or more, then the rail cars must be made accessible to the maximum extent feasible. See 42 U.S.C. 12181 note, and 12184(b)(7).

Title III also contains provisions regarding access to over-the-road buses (i.e., buses characterized by an elevated passenger deck located over a baggage compartment) operated by private entities. Title III requires the Office of Technology Assessment to conduct a study of the access needs of individuals with disabilities to over-the-road buses and the most cost-effective methods for providing access to such buses. See 42 U.S.C. 12185. Structural changes to over-the-road buses or the purchase of boarding devices to provide access to individuals who use wheelchairs may not be required until after July 26, 1997 for small providers of transportation, and after July 26, 1996 for other providers. See 42 U.S.C. 12186(a)(2). The President may extend those dates by one year if the President determines that the requirements will result in a significant reduction in intercity over-the-road bus service. See 42 U.S.C. 12185(d). Over-the-road buses purchased or leased after January 26, 1992 but before the above stated dates are required to include accessibility features which do not involve structural changes or use of boarding devices. See 42 U.S.C. 12181 note, 12182(b)(2)(D), 12184(b)(4), and 12186(a)(2)(A)(i). See also H. Rept. 101–485, pt. 1, at 43.

The Department of Transportation (DOT) is generally responsible for issuing regulations to implement the transportation provisions of the ADA. See 42 U.S.C. 12149, 12163, 12186. Section 504 of the ADA requires that the Architectural and Transportation Barriers Compliance Board issue guidelines to assist DOT to establish accessibility standards for transportation vehicles.[1] See 42 U.S.C. 12204. Section 504 states that the Board's guidelines are "to ensure that * * * vehicles are accessible, in terms of architecture and design, transportation, and communication, to individuals with disabilities." Id. The legislative history of the ADA provides further guidance regarding the level of accessibility to be provided. The House Committee Reports state that the ADA is intended to enable people with disabilities (including mobility, sensory, and cognitive impairments) to enter into and exit, and safely and effectively use transportation vehicles; and that, in addition to providing access to individuals who use wheelchairs, the design of new vehicles should include such features as non-slip floor surtaces, contrasting edges on steps, handrails and adequate illumination in boarding areas, contrasting characters on signage, public address systems for audible announcements, automatic door closing alarms, and systems for providing information for persons with hearing impairments. See H. Rept. 101–485, pt. 1, at 27; H. Rept. 101–485, pt. 2, at 88–89; H. Rept. 101–485, pt. 4, at 44.

Proposed Guidelines and Comments

On March 20, 1991, the Board published a notice of proposed rulemaking (NPRM) in the **Federal Register** which contained the proposed Americans with Disabilities Act (ADA) Accessibility Guidelines for Transportation Vehicles (56 FR 2296). The proposed guidelines contained nine subparts according to types of transportation vehicles and systems as follows:

Subpart A—General
Subpart B—Large Buses and Systems
Subpart C—Rapid Rail Vehicles and Systems
Subpart D—Light Rail Vehicles and Systems
Subpart E—Commuter Rail Cars and Systems
Subpart F—Intercity Rail Cars and Systems
Subpart G—Vans and Small Buses
Subpart H—Over-the-Road Buses and Systems
Subpart I—Other Vehicles and Systems

Each subpart set forth proposed accessibility requirements for the various elements and features of the covered transportation vehicles and systems, including level-change mechanisms or boarding devices for mobility aid accessibility, doors, floors, steps, thresholds, interior circulation, handrails and stanchions, lighting, public information systems, priority seating signs, and destination and route signs. Some requirements applied to only certain types of vehicles and systems and not others. For instance, rapid rail vehicles and systems provide for level boarding, and the proposed guidelines did not include any requirements for level-change mechanisms or boarding devices for those vehicles and systems. Where possible and consistent with the ADA, the proposed guidelines were based on existing guidelines, regulations, and industry practices. The proposed requirements for mobility aid accessibility were based on a set of advisory guidelines developed in 1986 under the sponsorship of the Urban Mass Transportation Administration (UMTA): Guideline Specifications for Active Wheelchair Lifts; Guideline Specifications for Passive Wheelchair Lifts; Guideline Specifications for Wheelchair Ramps; and Guideline Specifications for Wheelchair Securement Devices. Some of the proposed requirements for lifts were also based on specifications developed by the State of California. The proposed requirements for many of the other elements and features were based on regulations issued by DOT in 49 CFR part 609 to implement the accessibility requirements of the Urban Mass Transportation Act of 1964, Federal-Aid Highway Act of 1973, and section 504 of the Rehabilitation Act of 1973. The basis for each of the proposed requirements was discussed in detail in the preamble to the proposed guidelines.

On April 4, 1991, DOT proposed to incorporate the Board's guidelines in its final ADA regulations as the accessibility standard for transportation vehicles for purposes of titles II and III of the ADA. See DOT's proposed regulations, 49 CFR 37.13(a) and appendix A to Part 37— Standards for Accessible Vehicles at 56 FR 13881 and 13892 (April 4, 1991). Both the Board and DOT requested the public to submit comments on the proposed guidelines. The Board received a total of 150 comments submitted directly to the docket.[2] DOT forwarded to the Board

[1] The Board is an independent Federal agency established pursuant to section 502 of the Rehabilitation Act of 1973 to ensure that the requirements of the Architectural Barriers Act of 1968 are met and to propose alternative solutions to architectural, transportation, communication, and attitudinal barriers faced by individuals with disabilities. The Board consists of 12 members appointed by the President from among the general public, at least six of whom are required to be individuals with disabilities, and the heads of 11 Federal agencies or their designees whose positions are Executive Level IV or above. The Federal agencies are: the Department of Health and Human Services, Education, Transportation, Housing and Urban Development, Labor, Interior, Defense, Justice, and Veterans Affairs; General Services Administration; and United States Postal Service.

[2] The Board also issued proposed guidelines for transportation facilities covered by titles II and III of the ADA at the same time as the proposed guidelines for transportation vehicles. Comments on both sets of proposed guidelines were combined in a single docket.

copies of comments submitted to it on the proposed guidelines. Most of the comments forwarded by DOT had also been submitted directly to the docket. Only nine comments forwarded by DOT were not duplicated in the docket. Each comment submitted directly to the docket and each unduplicated comment forwarded by DOT was read and analyzed. In addition, comments relating to transportation vehicles received during the public hearings held on the proposed accessibility guidelines for buildings and facilities were reviewed. The majority of comments were submitted by transportation providers and national, regional and local organizations representing them. The next largest group consists of comments submitted by persons with disabilities and their organizations. The Board also received comments from vehicle and equipment manufacturers, engineers, planners, and consultants.

There are several general issues that the Board wishes to clarify before discussing comments on specific sections. First, these guidelines are issued to assist DOT to establish accessibility standards for transportation vehicles covered by titles II and III of the ADA. DOT has proposed to adopt the guidelines as the accessibility standards for transportation vehicles for purposes of the ADA. The final DOT regulations will establish the effective date for the accessibility standards and address when the standards are to be applied.

Second, although the general section at the beginning of each subpart refers to new and remanufactured vehicles, many commenters assumed that existing vehicles would need to be retrofitted. Indeed, almost all of the cost data submitted to the Board addressed retrofitting. With respect to vehicles, the ADA does not envision any retrofit. Even compliance with the "one-car-per train rule" and the mobility aid seating requirements for intercity rail can be met by the purchase of new vehicles. However, some entities which do not plan to purchase sufficient, new vehicles before the compliance date for the "one-car-per train" rule may choose to retrofit existing vehicles. For these entities, the Board has included provisions in the appropriate general sections concerning such retrofitted vehicles.

Third, these guidelines cover the design, manufacture and alteration of vehicles, not their operation. Several commenters wanted the Board to specify operational procedures or, alternatively, permit operational procedures to substitute for compliance with the technical provisions. Operational requirements are within the purview of DOT, not the Board. Except for the possibility of operational procedures allowed under the equivalent facilitation provision which is discussed below, the Board's statutory mandate is to ensure accessibility of the built environment, including instances in which operational procedures might fail. Thus, for example, the Board cannot assume that the strength, agility and attention of a driver will be sufficient to prevent a heavy wheelchair from rolling off a lift. Neither is it appropriate, as one transit operator suggested, to assume that fellow passengers will have the strength or skill to assist persons with disabilities to board vehicles. It is just as inappropriate to expect other passengers to lift a wheelchair user into a vehicle as it is to assume others should lift a wheelchair over a curb or carry someone up a flight of stairs to enter a building.

Fourth, several commenters suggested that the Board set structural or other requirements for wheelchairs and mobility aids especially with respect to securement devices. Neither the ADA, nor any other statute, confers upon the Board the authority to set standards or minimum requirements for wheelchairs and mobility aids. The ADA does, however, provide a clear mandate to the Board to set the minimum requirements for vehicles. The Board has attempted to carry out this charge in the fairest, most cost effective manner possible consistent with the statute.

Fifth, several commenters, especially transit agencies, pointed out that their current specifications or practices exceeded these guidelines in a particular area. The Board would like to stress that these guidelines are minimum requirements and that standards or specifications which provide greater access are permitted. In addition, there are sections which expressly permit alternatives (e.g., rear-facing securement). The word "may" is used where alternatives are permitted and should not be construed as a requirement. Also, an appendix has been included which contains non-mandatory, advisory guidance to assist in applying the rule.

Sixth, the Board, as required by the ADA, will be developing technical assistance manuals for individuals and entities with rights and duties under the Act. There will be a separate manual for each mode which will provide a clear interpretation with examples, of what is required by each provision. These manuals, which are to be published within six months of the date of this rule, will be available from the Board at no cost.

Finally, the Board notes that it plans to conduct periodic updates and revision of these guidelines. This will enable future technologies and practices to be incorporated in the guidelines. As noted in the following section-by-section analysis, the Board feels that additional data and study are needed in regard to certain issues and the Board intends to further revise and modify these guidelines based on its review of collected data and study results.

Section-by-Section Analysis

Subpart A—General

Section 1192.1 Purpose

This section is unchanged.

Section 1192.2 Equivalent Facilitation

Comment. Several commenters, including the American Public Transit Association (APTA), suggested that the guidelines provide a means by which alternative solutions can be developed at the local level which meet the intent of the guidelines. Others suggested some variance be given for unique situations, especially for old systems where existing stations and facilities were not designed to today's tolerances.

Response. The Board and DOT agree that there is a need for some flexibility to address unique and special circumstances and to facilitate the application of new technologies. Therefore, a new section has been added to the transportation vehicle guidelines on "equivalent facilitation" that is similar to the provision in the buildings and facilities guidelines. DOT is establishing procedures under which transit operators may pursue alternative means of providing accessibility with respect to specific requirements of the standard. See 49 CFR 37.7. DOT will determine on a case-by-case basis whether equivalent facilitation is provided. The Board wishes to point out that equivalent facilitation does not constitute a waiver from any accessibility requirement and is not a lesser standard of accessibility. Alternate designs and technologies may be used only where they will provide substantially equivalent or greater access to, and usability of, a vehicle. The Board encourages that, when considering alternative designs and technologies, entities should consult with individuals with disabilities and their organizations. The Board is available to provide technical assistance regarding equivalent facilitation. Some of the designs and technologies approved by DOT under

the procedures for equivalent facilitation may be incorporated into the guidelines by the Board during future revision and update of the rule.

Section 1192.3 Definitions

The terms used in these guidelines are defined the same as the terms used in the DOT final regulations.

Section 1192.4 Miscellaneous Instructions

A new section has been added to the final guidelines that contains miscellaneous instructions, including dimensional conventions and tolerances, and general terminology. An appendix has also been added to the final guidelines that contains additional information, explanations, and advisory materials.

With respect to dimensional tolerances, certain materials expand or contract due to variations in temperature or during the process of "curing" or drying. As a result, even close tolerances during construction or manufacture cannot insure continued conformance to a given standard. For example, a cable-driven historic inclined system in Pittsburgh has been modified to be generally accessible. However, the cable is subject to uncontrollable stretching during the day, especially in hot weather. The cars generally provide level entry in the morning, but may be significantly out of alignment by the end of the day. Such variation, even in a new system, resulting from material variations beyond the control of the operator would not be deemed in violation of the guidelines. Furthermore, unlike buildings and facilities which are essentially stationary objects, vehicles move and have dynamic as well as static "envelopes". Springs lose their elasticity, steel rails and wheels wear down, and supposedly "fixed" objects settle due to dynamic stress. The allowance for normal wear is only in accordance with accepted industry standards and practices, not simply an agency policy. If the industry, including designers, engineers, manufacturers, operators, and recognized professional associations agree that a specific adherence can be achieved above that allowed by an agency policy or practice, it is the industry standard which is to be applied, not the agency policy.

Reliance on dimensional tolerances, however, is not an excuse for improper or deferred maintenance, or poor design or construction methods. For example, the claim of "dimensional tolerances" could not be made for a lift which fails to meet the vehicle floor within the limits specified in these guidelines, simply because an adjustment which could have been reasonably made to a control system or limit switch was not made. Neither could a rail operator be excused from compliance because it accepted vehicles from a manufacturer which did not meet the operator's bid specification. Nor could a group of manufacturers, operators or designers, for example, simply get together to adopt a lower "standard" solely for the purpose of relaxing compliance. Such a change would need to be acknowledged by a significant segment of the industry to constitute an "accepted industry standard or practice." Moreover, an agency could not justify a wider horizontal gap as being within dimensional tolerances because it did not specify its vehicles to be within achievable limits for sway or stability.

Subpart B—Buses, Vans and Systems

Section 1192.21 General

Comment. The NPRM contained separate subparts for large buses (subpart B) and small buses (subpart G) based on gross vehicle weight rating (GVWR). The NPRM asked whether it was useful to have separate subparts as proposed or whether large and small buses should be covered under a single subpart with exceptions to various provisions based on such factors as passenger capacity, type of lift, or type of service. Only two commenters completely supported having separate subparts for large buses and small buses. Two other commenters suggested that the subparts be retained with the addition of type of service. Four commenters, including two transit agencies, supported consolidation into a single subpart, with exceptions. Another four commenters, including APTA, suggested a division according to length, with a manufacturer suggesting a variation of length and "heavy", "light" or "medium" duty. Three commenters suggested a categorization by passenger capacity.

Response. As noted in the NPRM, the subparts for large buses and small buses were identical in many ways. The NPRM also noted that the proposed division on the basis of GVWR was not necessarily the most readily apparent means of identification and that other agencies divided vehicles according to length or passenger capacity. The NPRM further noted that some requirements, such as public address systems or route and destination signs, were unnecessary for vehicles which are used in demand responsive service.

There was no clear consensus among the commenters. The Board has decided to consolidate the two subparts into a single subpart with exceptions in various sections for both length and type of service. This is the most "user friendly" method which will ensure uniform application of the requirements. The length of the vehicle, for example, is usually readily determined whereas passenger capacity depends on whether the vehicle has been modified to accommodate wheelchairs, for example. In addition, the current DOT regulations at 49 CFR 609.15 divide buses according to whether they exceed 22 feet in length. While APTA suggested a division at 30 feet, the Board has adopted the division from the existing DOT regulations to avoid conflicts.

Section 1192.23 Mobility aid accessibility

General

Comment. The NPRM asked several questions regarding the number of spaces to be provided for wheelchair and mobility aid users. There was broad support across all categories, including many transit operators, for providing two spaces for wheelchair and mobility aid users on buses, as well as other types of vehicles. Four commenters, including APTA, recommended providing two spaces on large buses only. Some individuals with disabilities and their organizations recommended providing more than two spaces. Several transit operators reported providing more than two spaces, especially on articulated buses, although they did not recommend requiring more than two. Only three transit operators specifically recommended requiring only one space. Two manufacturers and a regional transit organization pointed out that providing fold-down seats over such spaces would minimize the impact of potential lost seating. Another manufacturer said that easily removable seats are currently provided and the number of spaces could vary according to demand.

Response. The Board agrees that only one space for wheelchair and mobility aid users is inadequate, especially in light of the significant number of comments which reported instances of individuals with disabilities being denied service because only one space was provided and it was occupied. Some comments noted that individuals with disabilities have been denied service even where two spaces were provided. Comments from transit operators also showed considerable support for two spaces. Section 1192.23(a) has been modified to require vehicles in excess of 22 feet in length to provide a minimum of two spaces for wheelchairs and mobility aid users. Due

to the significantly different impact on seating for small buses and vans, and the fact that such vehicles are most often used to provide demand responsive service, the Board has decided that only one space should be required for vehicles of 22 feet or less. Despite this requirement, the Board expects that demand responsive operators will operate at least some vehicles with more than one space for wheelchair and mobility aid users to be able to accommodate the demand for transporting more that one wheelchair or mobility aid user at the same time.

Comment. The NPRM required sufficient clearance to be provided to permit a wheelchair or other mobility aid user to reach a securement location. Several commenters asked for additional specificity. Some said that Uniform Federal Accessibility Standards (UFAS) and ANSI A117.1 standard should be followed. A demand responsive operator submitted drawings to show that the maneuvering requirements for a wheelchair would require the removal of seats. This commenter also said that drivers assisted wheelchair users so that independent mobility was not needed and that a state mandated minimum aisle width would be incompatible with the requirement for a 30 inch by 48 inch clear floor space.

Response. While several commenters said that additional specificity of maneuvering space was needed, few provided any guidance on what it should be. Those commenters who suggested dimensions were unclear as to how they should be measured and between what points. With respect to UFAS and ANSI A117.1, those standards do not strictly apply to vehicles which are restricted by such things as the roadway width, vehicle code width requirements, and wheelwell intrusion into aisles.

With respect to the decrease in seating, claimed by the demand responsive operator, the guidelines only require "sufficient" clearance to enter the vehicle and reach a securement location. Nothing in the guidelines specify a turning radius or any of the maneuvering requirements shown in the drawing submitted with the comment. In addition, the 30 inch by 48 inch clear floor space is allowed to overlap or share an adjoining access aisle. Accordingly, the general performance requirement in § 1192.23(a) regarding clearances has been retained.

Vehicle Lift

Comment. A comment submitted by a manufacturer of urban transit buses and over-the-road buses claimed that the technology does not exist to meet the guidelines without the use of "high-tech" structural material.

Response. It is not clear from the comment whether the manufacturer was referring to urban transit buses, over-the-road buses, or both. In any event, comments received from a number of lift and bus manufacturers, as well as transit operators, claimed existing lifts either currently met most of the guidelines or probably could do so. This included lift manufacturers who claimed their lift had been fitted to over-the-road buses. The Board's library contains two video tapes showing existing or new lift designs installed on over-the-road buses. While some manufacturers objected to certain provisions of the guidelines, such as platform length or acceleration rate, this is the only comment which claimed a lack of technology to meet the requirements.

Comment. Most commenters generally supported the design load of 600 pounds in § 1192.23(b)(1), including lift manufacturers who said their current designs met the requirements. One manufacturer asked that the guideline be clarified to indicate that the safety factors were based on six and three times the design load. Two manufacturers suggested that a requirement for hydraulic hose burst pressure be added. Four commenters suggested that the design load be increased. No comments were received on this provision for vans and small buses.

Response. With respect to increasing the design load, it should be pointed out that the design load does not represent the maximum load the lift is capable of supporting. The safety factors for the support components mean the lift cables, pulleys and shaft will support 3600 pounds and the platform, frame and attachment hardware must support 1800 pounds. Except for one commenter who recommended that a 700 pound design load be required to accommodate persons with service dogs, none of the other commenters provided any justification for increasing the weight. The design load has not been changed.

Comment. The NPRM required that the lift controls be interlocked with the vehicle brakes or transmission or provide other appropriate fail safe systems so that the vehicle cannot be moved when the lift is not stowed and the lift cannot be deployed unless the interlocks are engaged. Two commenters suggested that the term "fail-safe" be removed from the requirement. One commenter said that a door interlock should be specified while another said that an accelerator interlock should be specified. One commenter suggested adding a requirement for an air suspension or "kneeling" device on the left rear wheel to "level" the vehicle and allow the lift to be deployed at high curbs. Another commenter suggested that an auditory alarm be specified to alert people that the lift is in operation.

With respect to vans and small buses, four commenters, including two transit operators and a transit association, said that a variety of interlocks are available for vans and small buses and supported the general performance requirement.

Response. The types of interlock systems used on transit vehicles cannot be made "fail-safe" as the term is defined in the field of reliability engineering. This term has a precise meaning which is not intended by the guidelines. Therefore, the term has been removed from § 1192.23(b)(2). This should not be construed as diminishing the requirement for safe interlock systems.

The NPRM included an exception for a rotary lift for small buses but not large buses because the use of a rotary lift has some unique operating requirements, such as a close parallel approach to the curb. The Board did not consider the application of a rotary lift to a large bus as very likely. Since the subparts for large buses and small buses have been consolidated, the rotary lift exception for small buses has been retained and now applies to all buses.

Placing a "kneeling" device on the left rear wheel to permit the lift to be deployed at a high curb, or where the road crown is severe, is a good idea. However, since this was not proposed in the guidelines, and there was no opportunity to solicit comments on the merits of the proposal, the Board has not required it at this time. As for an auditory alarm, it has generally been used to alert other passengers to the operation of the lift and is, therefore, not directly related to accessibility. Transit operators are not precluded from specifying such a device.

Comment. Three manufacturers and one transit organization suggested that the phrase "when operated according to manufacturer's instructions" be added to § 1192.23(b)(3). Another commenter suggested that the platform be prevented from stowing or folding while occupied.

Response. The Board agrees that the suggested phrase is appropriate and has revised § 1192.23(b)(3) accordingly. The provision is intended to prevent the platform from stowing or folding while occupied and this clarification has been added.

Comment. Two manufacturers and one transit organization suggested changing the requirement in § 1192.23(b)(4) to "single failure of any load supporting component" instead of chain, cable or hydraulic hose. One manufacturer suggested that the fall rate for a vertically stowed platform be changed from 12 to 36 inches per second.

Response. The suggested phrase is more descriptive of the failure to be guarded against and has been incorporated in § 1192.23(b)(4). The fall rate has not been changed, however, because this is substantively the same as the UMTA sponsored guideline specifications and the provision is intended to protect a person with a disability who might be waiting for the lift to deploy when the power fails. This is not a "planned" event which can be anticipated and the slow rate might provide enough time to move out of the way.

Comment. Most of the commenters, including manufacturers and APTA, suggested that the safety test procedure for outer edge barriers in the UMTA sponsored guideline specifications be included in § 1192.23(b)(5). This test procedure involved the use of actual wheelchairs being driven against outer barriers in order to determine the minimum height barrier preventing a wheelchair from rolling off the lift platform. Two transit operators and a manufacturer suggested that the provision be revised to specify only the performance requirement. Several commenters recommended that a maximum barrier height be set and suggested heights ranging from 2 inches to 6 inches. Some commenters recommended that the barrier be required to angle outward at 45 degrees to accommodate larger wheelchairs. Other commenters requested that the phase "entering the vehicle" and requirements for side barriers which "extend beyond the vehicle" be clarified.

With respect to small buses and vans, a manufacturer and an operator said the barrier requirement as proposed would not increase the weight of the lift and that the current lift met the requirement. The operator also suggested that the side barrier be 4 inches.

Response. The Board has not specified a safety test for the loading edge barrier in the final guidelines because the National Highway Transportation Safety Administration (NHTSA) is planning to issue proposed safety standards for lifts. The Board feels that NHTSA is the appropriate agency to define safety tests. In the meantime, § 1192.23(b)(5) has been revised to include only a performance requirement. The test proposed in the NPRM could be interpreted as meaning that a 3 inch high barrier was sufficient to prevent a power wheelchair from rolling off a platform. This is not the case. Further, the proposed test seemed to ignore other potential solutions such as a reported Canadian standard which would address the issue of preventing the occupant of a wheelchair or mobility aid from falling from the platform even though the chair was restrained. Accordingly, the provision has been modified to permit a supplementary system as an alternative to a high barrier. Clarifying language has also been added to the provision with regard to the meaning of "entering the vehicle" and the need for side barriers on the portion of the lift which is outside the vehicle when the platform is raised. The requirement for side barrier height has not been changed because some rims on the cambered wheels of sport wheelchairs may need space to clear them.

Comment. There was wide support for the 30 inch by 48 inch platform, including APTA and two other transit organizations, five operators, three manufacturers, and seven individuals with disabilities or their organizations. In addition, two manufacturers and a transit operator suggested that the platform length should be 50 inches. Several persons with disabilities recommended platform lengths ranging from 51 inches to 54 inches. One commenter said that the 30 inch by 48 inch platform size was too small to accommodate a service dog. The 38 inch by 48 inch platform also received similar broad support from those who commented on small buses and vans. In addition, two operators and one manufacturer said large and small vehicles should have the same lift because they will need to transport the same people and several manufacturers said their lifts met or exceeded the requirement.

On the other hand, three manufacturers and the American Bus Association (ABA) said that it would require study and retooling to meet the platform requirements. One manufacturer suggested that the current designs be permitted for 18 months.

Response. The UMTA sponsored guideline specifications called for a platform length of 44 inches, 2½ inches above the platform, and recommend 48 inches length. UFAS and the ANSI A117.1 standards specify a 48 inch length for an occupied wheelchair and require a space of 48 inches by 30 inches for an accessible seating location and platform lift. As explained in the NPRM, the shorter length included in the UMTA sponsored guideline specifications is based on a misunderstanding of the wheelchair data and would not accommodate larger power wheelchairs and three wheeled scooters which are used by many individuals with disabilities who ride public transportation. Furthermore, power wheelchairs usually have "anti-tip bars" and smaller wheels that are set further back than manual wheelchairs which limit the location of lift safety barriers. This information has been readily available for some time, and was discussed at length in the Board's technical publication Lifts and Wheelchair Securement published in 1987. Most lift manufacturers have responded to this information and have designed their lifts accordingly.

Section 1192.23(b)(6) has been modified to be consistent with the change in the definition of common wheelchairs and mobility aids and provides that the 48 inch length and 30 inch width are to be measured 2 inches above the platform. The change acknowledges that the door structure of some buses would not permit a 30 inch wide platform unless the frame was modified. The NPRM contained an exception for a narrower lift platform under these conditions. However, after discussing the provision with its Advisory Committee, DOT informed the Board that the exception could have the unintended result of perpetuating narrow platforms. As a result, DOT suggested that the width be measured 2 inches above the platform to allow a narrower platform at the bottom only, thus permitting wider platforms to be incorporated without the need to modify the door frame. Accordingly, the exception proposed in the NPRM has been deleted.

Comment. The NPRM discussed a Board sponsored research project on slip resistant surfaces which recommended a static coefficient of friction of 0.6 for level surfaces and 0.8 for ramps, and requested comments on whether these values should be specified in the guidelines. Few comments were received on the issue. Three commenters said a test should be defined and four commenters said the values were appropriate. A manufacturer and a trade association said that current flooring material meets the value for level surfaces.

Response. The proposal to specify a value for slip resistant surfaces was also included in the proposed guidelines for buildings and facilities. Comments to that docket discussed the technical difficulties in measurement. Further, NHTSA is considering proposing a test

for slip resistance. In light of the difficulty in specifying an appropriate method of measurement, the Board has decided not to specify any values in the final guidelines. Instead, advisory materials on slip resistance has been placed in the appendix.

Comment. Two manufacturers supported the proposed requirements in § 1192.23(b)(7) regarding platform gaps. A manufacturer and the ABA said that the current lift met the standard. Another manufacturer and APTA said that it should be changed to a more general performance standard to prevent a wheelchair wheel from falling through. An organization dealing with accessibility said that the gap should be no greater than ½ inch. A person with a disability said that the gap should be small enough so as not to allow the paw of a service dog to fall through. Another commenter suggested a change to ¾ inch to allow use of an expanded metal platform. In response to a question about side gaps at the floor level, manufacturers and transit operators both said that they used various "close-outs" to eliminate the gaps.

Response. Section 1192.23(b)(7) is intended to prevent the front caster of a wheelchair from turning sideways and dropping through the gap between the raised barrier and the platform. It is, therefore, the quantification of the performance criterion suggested by two commenters because ⅝ inch is the approximate width of a wheelchair caster wheel. It should also be small enough to prevent a service dog paw from falling through. The Board does not consider the difference between ⅝ and ½ inch to be significant enough to require a change. The provision applies only to the gap between the platform and the barrier and does not preclude the use of expanded metal platforms.

The NPRM included a provision for handholds on semi-automatic lifts on vans and small buses. This provision has been moved to § 1192.23(b)(7) in the final guidelines.

Comment. The requirement in § 1192.23(b)(8) for platform entrance ramps was supported by APTA, a transit operator, a lift manufacturer, and four other commenters. An accessibility organization said that the 1:8 slope was too steep and another commenter said that slopes greater than 1:8 should not be permitted. The ABA, a transit operator and two manufacturers recommended a 1:6 slope and another manufacturer recommended a 1:4 slope. One commenter said that the slope should be specified as measured on level ground.

Two manufacturers and the ABA said that the current lift meets the ¼ inch threshold requirement while another manufacturer and an operator wanted ⅝ inch.

Response. The ramp slope in § 1192.23(b)(8) is based on common accessibility standards. None of the commenters indicated that the requirement could not be met or that it was necessarily difficult. The Board is inclined to relax certain slope standards where there is reason to do so, based on physical constraints. However, in view of the support for this provision, the availability of equipment which meets the standard, and the lack of convincing evidence that the slope should be changed, the requirement has been retained. The suggestion to define the slope as being measured on level ground is reasonable and has been incorporated.

Comment. Two manufacturers supported the requirement in § 1192.23(b)(9) regarding platform deflection. APTA and a manufacturer said that it should be clarified to exclude vehicle roll. Another manufacturer said that it may be difficult but was attainable. The ABA and a manufacturer said the deflection load should be changed to 375 pounds or the permissible angle changed to 5 degrees. Another commenter suggested that the deflection load be raised to 750 pounds.

The NPRM noted that the UMTA sponsored guideline specifications provide for a 400 pound test for active lifts commonly used on small buses and vans and requested whether it should be increased to 600 pounds, the same as large buses. A transit organization, two operators, a manufacturer, and one other commenter supported the 400 pound test. One operator said the current lift was rated at 500 pounds.

Response. Section 1192.22(b)(9) has been clarified that the platform deflection is exclusive of vehicle roll or pitch. The exclusion of vehicle pitch is to account for the case where an active lift may be located in the rear door of a van or small bus. In practice, however, the Board expects that the deflection would not be measured on the vehicle but would be measured by the manufacturer on a "test rig" in the factory. The manufacturer would then certify the lift as meeting the standard. The same is also anticipated for other measures, such as acceleration and barrier resistance.

Since the vehicle will normally tilt when the lift is loaded, due to the weight of the wheelchair or mobility aid and the user, there will be a slope away from the vehicle toward the barrier. The reason for limiting the deflection of the lift platform is to minimize the contribution to this slope by the platform. This standard has been a part of the UMTA sponsored guideline specifications for passive lifts. The reason for not changing the deflection load is that the lift must function when occupied by a common wheelchair or mobility aid which is defined as weighing as much as 600 pounds when occupied. To increase the angle would allow the platform to slope more with a heavy wheelchair, the situation which is potentially the most dangerous and the most likely to result in a wheelchair or mobility aid overriding or defeating the barrier.

With respect to active lifts typically used on vans and small vehicles, the vehicle roll is even more pronounced due to the lighter vehicle weight and less stiff suspension. In reality, such lifts should be required to have less deflection, not more, to compensate for the greater vehicle roll. However, requiring stricter requirements on these lifts is not anticipated at this time. It should be noted that, under the ADA, persons who could use a fixed route bus, but the route needed is not yet accessible, are eligible for paratransit. Therefore, it makes no sense for the vehicles providing such demand responsive service to meet a lesser standard than those for fixed route buses. They both must accommodate the same range of common wheelchairs and mobility aids.

Comment. Several comments supported the 6 inch per second speed proposed in § 1192.23(b)(10), including two transit operators and a manufacturer. Two other manufacturers did not object to the speed but suggested that the maximum acceleration rate should be 0.3g. Another manufacturer said that the 0.2g acceleration rate would be difficult to meet and that the 6 inch per second speed should apply only to an occupied lift. The ABA and a manufacturer suggested that 12 inches per second speed should be allowed for deployment and stowage. APTA and another manufacturer said that the speed rate should not apply to deployment and stowage because it affects dwell time. In response to a question in the NPRM, a manufacturer said that the jerk rate (rate of change of acceleration) should not be specified.

Response. The requirements in § 1192.23(b)(10) are taken directly from the UMTA sponsored guideline specifications which adopt a slower speed for reasons of safety and comfort. The slower speed is even more important for use by standees. However, the slower speed is only relevant to the raising and lowering of an occupied lift. The Board is concerned about

unnecessarily increasing dwell time. The speed with which the lift deploys or stows is not unrelated to safety, however. A potential user waiting outside the vehicle might not be able to get out of the way of a rapidly deploying lift. Similarly, some lifts which fold up into the passenger compartment, particularly active lifts, could pose a hazard to a person inside the vehicle near the lift if the platform stowed too fast. Accordingly, the provision has been modified to specify the 6 inch per second speed only to the raising and lowering of an occupied lift and to specify a 12 inch per second speed for the deploy and stow portion of the cycle.

The UMTA sponsored guideline specifications specify an acceleration rate of 0.3g for active lifts and 0.2g for passive lifts. A lower rate was specified for passive lifts for reasons of comfort, even though an earlier report on lift safety had recommended a rate of 0.3g. The Advisory Panel which developed the UMTA sponsored guideline specifications did not examine, nor is the Board aware of, any evidence that the higher acceleration rate permitted for active lifts is unsafe or uncomfortable for passive lifts. Since the requirements for large buses have been consolidated, § 1192.23(b)(10) has been revised to specify the 0.3g acceleration rate.

The Board agrees that the jerk rate is difficult to measure and can easily be affected by other variables not directly related to the rate of change of acceleration of the lift platform itself. Also, there is no research which identifies acceptable jerk rates for persons with disabilities. Accordingly, the final guidelines do not specify a jerk rate.

Comment. The requirement in § 1192.23(b)(12) regarding use by standees received wide support from all commenters, including APTA and two other transit organizations, individuals with disabilities and their organizations, government agencies concerned with accessibility, and consultants. Similar support was expressed for the same requirement with respect to vans and small buses.

With respect to large buses, two manufacturers and an operator said that the lift should not accommodate standees. Another manufacturer suggested that an attendant or the driver might be needed on the lift with standees. With respect to vans and small buses, a commenter said that it should be at the option of the transit operator and another commenter said that standees should not be accommodated on the lift. A manufacturer also expressed concern about allowing standees.

In response to a question in the NPRM, four transit operators, six individuals with disabilities or their organizations, the ABA, and a manufacturer, and three other commenters supported having a band of contrasting color around the perimeter of the lift platform. Three manufacturers said that the perimeter should not be marked and one transit operator noted that the handrails and edge barriers adequately marked the sides.

Response. The legislative history clearly states that Congress intended lifts to accommodate standees. See H. Rept. 101–485, pt. 2, at 89. In view of the wide support for this provision, including transit operators and transit associations, the Board has retained the requirement in § 1192.23(b)(12) for standees to be accommodated.

With respect to the perimeter marking, the question was asked primarily because NHTSA is considering such a requirement. In light of the other requirements for lighting on the platform, a contrasting edge, side barriers, and handrails, the Board does not believe that a perimeter marking should be required.

Comment. Four commenters said that the 100 pound force requirement for lift handrails was inadequate. One commenter pointed out that handrails and grab bars in buildings and facilities are required to withstand a force of 250 pounds. A transit operator pointed out that the Baseline Specifications for Advance Design Buses (hereinafter referred to as "White Book") require bus handrails to meet a 300 pound test. The ABA and a manufacturer supported the provision noting that it was a well established Canadian standard which should not be changed without compelling evidence that it was inadequate.

APTA and a manufacturer said that curved handrails should be permitted. Two other manufacturers and an operator said that vertical handrails should be permitted. Another operator said that the guidelines should not specify the height or configuration of handrails, but only provide a performance specification. An operator and a manufacturer said that handrails should be on both sides of the platform, and another manufacturer and operator said that handrails should be on one side. With respect to vans and small buses, three operators and a transit organization wanted only one handrail. Another operator said that most paratransit lifts do not have handrails and independence is not encouraged. A manufacturer said that all major active lift manufacturers offer handrails on both sides as an option.

An operator supported the 1¼ inch to 1½ inch diameter and 1½ inch clearance requirement, and another pointed out that it was the same as the White Book. The ABA and a manufacturer wanted to allow a 2 inch diameter handrail; and two other manufacturers wanted to allow a 1 inch diameter handrail.

An operator supported the requirement for the handrails to be between 30 inches and 34 inches. Another operator said that the guidelines should allow higher handrails. Two operators wanted to specify only the minimum height as 24 inches.

Response. Handrails in buildings and facilities are required to withstand much higher forces because they are intended to provide support for rising from a sitting position, maneuvering into and out of a wheelchair or mobility aid, or walking up or down stairs or ramps. The handrails on a lift are intended only to provide stability as opposed to major support. Lift handrails meeting the 100 pound force requirement have been in service for many years with no known problem. Moreover, handrails mounted on walls, are subject to torques which are very different from those on lift handrails attached only to the platform. To withstand equivalent forces would require substantial reinforcement of the lift handrail attachment points, with corresponding increases in weight, and a potential decrease in the platform width. In the absence of information that the 100 pound force requirement is inadequate, it has not been changed.

As for handrail shape, the configuration is related to mounting height. For example, the UMTA sponsored guideline specifications specify mounting between 25 inches and 34 inches. Considerable research has been conducted in the past on the height of a handrail which can be used by persons with a disability. Until recently, the accepted height has been a minimum 30 inches and a maximum 34 inches above the platform. More recent research on handrail height has suggested that a height from 34 inches to 38 inches is better and these dimensions have been accepted by the model building codes and incorporated in the final guidelines for buildings and facilities. Because of design constraints imposed by the vehicle, the Board is not inclined to fully impose these new dimensions on handrails. However, in light of the comment asking for a higher upper limit, or the Board has

incorporated the 38 inch maximum but retained the 30 inch minimum height in § 1192.23(b)(13). In response to the request for a performance criterion instead of height requirements, the Board notes that the existence of such criteria currently, has resulted in the placement of handrails which are too low, according to research. Clearly, specific guidance is needed to correct this situation.

With respect to handrail shape or configuration, the Board is not aware of any problems with either curved or vertical handrails, provided they move in tandem with the platform. Therefore, the provision has been revised to remove any explicit reference to diagonal or horizontal configuration. Further, the usable length has been changed from 12 inches to 8 inches so that a vertical handrail between the mounting height limits would not be precluded. Handrails which extend above or below the limits are, permitted, provided a usable segment is provided within the limits.

As for handrail diameter, the requirements in § 1192.23(b)(13) are consistent with the White Book. Also, the Board sponsored hand anthropometrics research project tested gripping by persons with various hand disabilities and confirmed the appropriateness of the specified dimensions. A 1 inch diameter handrail would not be usable. The Board notes that most vehicle handrails are made of pipe. In the building industry, pipe size typically specifies inside diameter so that a 1½ inch pipe handrail actually has a larger outside diameter, sometimes up to 2 inches. Such handrails have not posed any known problem. Thus, the 1½ inch diameter requirement can result in a handrail of approximately 2 inches under current building industry practices. The 1½ inch clearance also received general support and has been included in § 1192.23(b)(13).

It is critical that more than one handrail be provided if standees are to be able to use the lift. The presence of two handrails is also critical for rotary lifts. However, because of the design of rotary lifts, it may be that a suitable configuration can be achieved with handrails that are not necessarily on opposite sides of the platform. Accordingly § 1192.23(b)(13) has been modified to specify handrails on "two sides" rather than "both sides" of the platform. The performance criterion that the handrails be usable throughout the entire lift cycle still applies.

Vehicle Ramp

Comment. APTA and two other commenters expressed general support for all the requirements in § 1192.23(c) for ramps. One commenter suggested that the design load should be changed from 600 pounds to 750 pounds.

Response: Since ramps are permitted in some cases instead of lifts, it is essential that they be designed to accommodate the same range of common wheelchairs and mobility aids. The 600 pound design load has been retained for ramps 30 inches or longer. Since ramps shorter than 30 inches have to support only about half the weight of a wheelchair or other mobility aid at a given point, a 300 pound design load is specified for shorter ramps.

Comment. Two commenters requested clarification on the requirement for a "continuous surface" in § 1192.23(c)(2) and wanted to know if it excluded expanded metal platforms.

Response. The term "continuous surface" was used instead of "solid surface" to mean a single, uninterrupted surface from edge to edge as opposed to a platform with a gap in the middle that may incorporate steps. It was also intended to preclude the use of two separate ramps placed some distance apart. Those configurations can accommodate four wheeled devices but cannot accommodate three wheeled scooters. Ramps having two parts are permitted, provided they are designed to be deployed together to provide a uniform, uninterrupted surface. The term was not intended to preclude expanded metal ramps which are often much lighter than solid platforms of the same strength.

Comment. Two manufacturers and two other commenters supported the requirement in § 1192.23(c)(3) regarding ramp threshold. Two operators suggested that a threshold be ⅝ inch.

Response. Since the requirement in § 1192.23(c)(3) is based on common accessibility standards and two manufacturers said that it was easily achievable, the Board has not changed the provision. The operators who suggested a ⅝ inch threshold seemed to have been concerned about existing equipment which is not affected by these guidelines.

Comment. APTA and a manufacturer said the height of side barriers in § 1192.23(c)(4) should depend on the length of the ramp. One operator said that it used a short bridge plate which, because of its placement between door posts, limited lateral movement of a wheelchair or mobility aid which made side barriers unnecessary.

Response. Neither APTA nor the manufacturer provided information on how the barriers should vary according to ramp length. While short ramps or bridge plates that are placed between door posts limit the likelihood of a wheelchair or mobility aid rolling off, the Board believes there is still sufficient danger in many situations to require edge barriers. In the absence of any data on what the cutoff point should be, and in view of the limited comments in opposition to the provision, the Board has decided not to change this requirement until further study is completed or additional information is obtained. The Board will consider adding additional requirements during future revision and update of the guidelines.

Comment. Four persons with disabilities or their organizations and a government accessibility agency supported the slope requirements in § 1192.23(c)(5). APTA, two manufacturers, and an operator suggested allowing slopes of 1:4. Another manufacturer suggested 1:6. One manufacturer noted that a long ramp could not be stowed in most vehicles, especially under the floor. An operator said the slope should be negotiable without operator assistance and another commenter said that the specified slopes were too steep.

Response. As discussed in the NPRM, tests of ramps on buses were conducted as part of the Transbus program. Those tests showed that a slope of 1:6 was generally the maximum slope which could be negotiated but that short ramps of 1:4 slope could be used under some circumstances. The Board recognizes that there are practical difficulties in meeting common accessibility standards in vehicles which are constrained by other factors, such as maximum width. Further, some ramped buses designed for, and used in, urban areas would have ramp slopes at curbs which meet common accessibility standards but may also operate under other conditions, such as rural areas. Nevertheless, because of the advantages of ramped buses in terms of cost, efficiency and speed of boarding, the Board does not want to preclude their use or continued development.

In view of the factors which could affect ramp slope, § 1192.23(c)(5) has been revised. In general, the least slope practicable must be obtained, and may not exceed 1:4 when deployed to the ground. For purposes of determining the "normal" deployment condition, the provision assumes a 6 inch high curb. A slope of 1:4 is permitted if the vertical floor height is 3 inches or less above a 6

inch curb. This would require a ramp approximately 1 foot long and would be short enough to be negotiable by many people. If the floor height does not exceed 6 inches above the curb, a slope of 1:6 would be permitted. A slope of 1:8 would be permitted if the floor height does not exceed 9 inches above the 6 inch curb. A slope of 1:12 would be required for greater rises.

Comment. A manufacturer and another commenter supported the requirement in § 1192.23(c)(6) regarding attachment of the ramp to the vehicle. APTA suggested that the provision should simply say the gap could not allow a wheelchair wheel to drop through rather than specifying a dimension. A government accessibility agency said that portable ramps should not be permitted in new vehicles.

Response. The ⅝ inch gap specified in § 1192.23(c)(6) is based on the width of a wheelchair front caster. In this case, the Board believes simplicity should be the rule. The specified dimension is easy to measure whereas specifying a performance criterion would require the ramp manufacturer to first make an independent determination of what constitutes an appropriate gap for a variety of mobility aids. The measurement does not appear to be burdensome.

With respect to portable ramps, the legislative history specifically mentions portable ramps as a viable option for some vehicles. The principal complaint about portable ramps has usually been the possibility of slipping which the Board believes is adequately addressed by the requirement that the ramp be firmly attached to the vehicle when in use for boarding and alighting.

Comment. A manufacturer expressed support for § 1192.23(c)(7) regarding ramp stowage. Another commenter said that it was an operational issue which should not be addressed by the guidelines.

Response. Section 1192.23(c)(7) has been revised to address the provision of a stowage compartment, securement system, or other means of ensuring that the ramp does not pose a hazard. In many situations where portable ramps are currently used, the ramp is simply set inside the passenger compartment, sometimes leaning against the passenger's mobility aid, where it could cause injury in a sudden stop or maneuver. Some ramps automatically stow in a pocket under the floor or are folded back over the step. At least one manufacturer provides a storage area immediately inside the door as part of the handrail configuration.

Comment. The NPRM asked whether handrails should be required on ramps. An individual with a disability and a government agency said that handrails should be required on ramps. Another commenter said that handrails should be required on ramps with a slope greater than 1:12 or longer than 6 feet. Four commenters said that handrails should only be provided if they did not interfere with maneuverability. APTA, a manufacturer, and three operators said that ramps should not be required to have handrails.

Response. The Board generally agrees that "short" ramps and bridge plates do not need handrails. Unfortunately, there is no general agreement on the definition of "short". Since most ramps and bridge plates will probably be "short" in some sense, the Board has not made the provision for handrails on ramps mandatory. The Board will further review this issue when the guidelines are revised and updated.

Securement Devices

Comment. Two manufacturers and an individual with a disability supported the requirement in § 1192.23(d)(1) regarding design load of securement devices. APTA said that the design load should be the same for all vehicles. An operator wanted clarification of the "force per securement leg". No comments were received on the requirement for vans and small buses.

Response. As explained in the NPRM, the force requirements for different weight vehicles is based on research on the g-forces experienced by various vehicles and their crash profiles. In the absence of new data or research, the Board does not believe a change is warranted. The significant forces during collision are imposed primarily on the rear securement legs. Four-point securement systems are common in paratransit and some fixed route operations but the two forward straps are primarily designed to provide containment and reduce or prevent rebound. Therefore, the front straps are not subjected to the same forces. Section 1192.23(d)(1) is not intended to suggest a two-point securement system.

There are several securement devices which have been used successfully in a variety of situations which are described in the Board's technical assistance brochure "Securement of Wheelchairs and Other Mobility Aids on Transit Vehicles." This brochure, available free from the Board, provides detailed technical specifications for securement devices and lists available resources. Such devices, properly installed, should meet these guidelines. In addition, there are several new and on-going projects designed to produce better securement devices.

Comment. A manufacturer supported the provision in § 1192.23(d)(2) regarding securement area location and size. Another commenter said that the area was too small to accommodate a service dog and should be 32 inches by 51 inches. An operator commenting on the corresponding provision for vans and small buses said that the area should be 50 inches by 27 inches.

Response. The area is consistent with the definition of common wheelchair and mobility aid. Service dogs should be able to be accommodated in an area adjacent to the space specified, not necessarily within it.

Comment. A manufacturer and three other commenters supported § 1192.23(d)(3) regarding mobility aids accommodated. An operator said that the system should support more independent use. APTA, the ABA, another transit organization, an operator and two manufacturers said that wheelchair standards and a common attachment point should be required.

Response. Section 1192.23(d)(3) is designed to require accommodation of all common wheelchairs and mobility aids as defined in § 1192.3 including power wheelchairs. As discussed above, the Board does not have the statutory authority to set standards or guidelines for wheelchairs and mobility aids. However, the development of some standards is currently under way through the International Standards Organization and RESNA, a professional society of experts in rehabilitation technology.

Comment. In response to questions in the NPRM regarding orientation of securement systems, two operators, two individuals with disabilities or their organizations, a government accessibility agency and a manufacturer supported forward facing securement. In addition, APTA, two manufacturers, an operator, and four other commenters favored either forward facing or rearward facing systems with a padded barrier. Another manufacturer and an operator favored permitting rearward facing systems as an option. Another government accessibility agency said that rearward facing systems should not be permitted. A manufacturer and an operator said that side facing systems should be permitted. A transit association said that systems provided in addition to the one forward facing system required should be allowed to be side facing.

With respect to the corresponding provision for small vans and buses, two operators supported the requirement for forward facing systems. Two other operators and a transit association said

that forward facing systems, or rearward facing ones with a barrier, should be allowed. Another operator said rearward facing systems should be optional. One operator said that rearward facing systems should not be required because the barrier might restrict driver vision. Another operator and a transit association said that securement systems provided in addition to the one forward facing system required should be allowed to be side facing.

In the NPRM, the Board suggested a possible configuration for a padded barrier. The few comments received on this issue generally said that the suggested dimensions were adequate. One manufacturer said that such a barrier might cost $100. Many of the commenters agreed that the side facing system has been shown to be unsafe by all available crash test data. No information was provided to contradict the data.

With respect to large buses, five manufacturers, three individuals with disabilities or their organizations, an operator, a government accessibility agency, and an engineering firm said that lap and shoulder belts should be provided. In addition, the ABA, two operators and a manufacturer said that lap and shoulder belts should be available as an option; and three individuals with disabilities or their organizations and an operator said their use should be optional. Another operator and a transit association said that lap and shoulder belts should not be provided, in part due to concerns about vandalism. With respect to vans and small buses, an operator said lap and shoulder belts should be provided for all passengers on paratransit vehicles.

Response. In light of the strong support for rearward facing systems, the Board has revised § 1192.23(d)(4) to permit such systems with a padded barrier. As revised, § 1192.23(d)(4) requires at least one forward facing system on vehicles in excess of 22 feet, with a rearward facing system permitted for any additional positions. Vehicles 22 feet in length or shorter may provide only rearward facing. A requirement has also been added for a padded barrier for rearward facing systems. The padded barrier does not have to be solid. Barriers provided on some vehicles have consisted of a series of padded bars with spaces between, specifically for driver vision. It is also possible that the barrier could be removed or folded when the space is not occupied. It is critical, however, that the barrier be provided for rearward facing systems to prevent severe, possibly fatal, whiplash. The Board would also note that rearward facing systems are optional and operators can provide only forward facing systems.

With respect to lap and shoulder belts, only two commenters opposed them. Again, from the available crash test data, lap and shoulder belts are more important on small vehicles, where the g-forces are greater. A requirement has been added at § 1192.23(d)(7) to require a lap and shoulder belt system at each securement location on vehicles of any length.

Comment. APTA and five other commenters supported the provision in § 1192.23(d)(5) regarding movement of a secured wheelchair or mobility aid. An operator and a manufacturer pointed out that the requirement for a 2 inch movement could be met only under normal operating conditions, not in a crash. Three manufacturers said that the requirement should allow 4 inches of movement. An operator and an engineering firm said that 2 inches was too much. In response to a question in the NPRM, the ABA and a manufacturer said that a zero inch requirement was not attainable.

Response. The Board agrees that the 2 inch movement requirement cannot be met under all conditions. In fact, some elasticity is desirable to absorb shock from collisions or even emergency stops. Therefore, a statement regarding normal operating conditions has been added to § 1192.23(d)(5).

Comment. A manufacturer said that the area over the securement device should have fold down seats and should not be occupied by standees when not occupied by a wheelchair or mobility aid user.

Response. Whether standees are permitted to occupy the area over the securement device when not occupied by wheelchair or mobility aid user is an operating decision to be made by the operator. The guidelines are intended to provide accessibility in a safe manner and § 1192.23(d)(6) merely intends to require that securement devices not pose a hazard. Consequently, the provision has not been changed.

Section 1192.25 Doors, Steps and Thresholds

Comment. Several commenters supported the proposed contrast formula in the NPRM and some suggested that further study is needed.

Response. There was considerable objection to contrast formula in the proposed guidelines for buildings and facilities, and the Board deleted it from those final guidelines. The provision has also been deleted from the final guidelines for transportation vehicles and placed in the appendix as advisory material.

Comment. The NPRM proposed requirements for step height and risers on buses. A government accessibility agency supported an 8 inch riser and an 11 inch tread for steps on buses. One manufacturer said this could be achieved only at the front door and only if the first step were raised above the 14 inches. The vast majority of commenters, including APTA, the ABA, transit associations, manufacturers and operators, said that the proposed requirements could not be achieved without major structural changes. Some commenters supplied detailed engineering drawings showing how such changes would interfere with major structural elements under the floor. The commenters also pointed out that such changes, which would usually involve the addition of a step, would impinge on the vestibule and reduce the maneuvering room for wheelchair and mobility aid users entering from the lift. The commenters also pointed out that the guidelines allow standees to use the lift, thus solving the problem sought to be addressed by the provision.

Response. The Board is convinced by the considerable evidence supplied that the proposed requirements for step height and risers on buses cannot be met without major structural changes. Also, the prospect of reducing the maneuvering room for wheelchair and mobility aid users is a serious concern. The Board is pleased with the overwhelming response from operators and associations in support of allowing standees to use lifts and accordingly has removed the requirements for steps and risers. The Board may further consider this issue when the guidelines are revised and updated.

Comment. The NPRM proposed clear width, and closing force and speed requirements for doors on buses. A local government accessibility agency, an engineering firm, and another commenter supported the proposed requirement. A manufacturer supported the provision for the front door only. The ABA and a manufacturer said that the door width requirement cannot be set without structural change.

APTA and two manufacturers said that the 15 lbf closing force provision should distinguish between passenger operated and driver operated doors. An operator recommended that the force be 20 to 30 lbf. Three other commenters said the closing force and speed should be limited but made no specific recommendations.

With respect to a question in the NPRM regarding door height on large buses, an operator and another commenter said height should be specified for large vehicles, as it is for small buses. Another operator said that the height should be left to the manufacturer. A manufacturer said that its bus has a height from raised lift to top of the door of 68 inches. Another manufacturer said that its bus had a clearance from the raised lift to top of the door of 68.5 inches or 69.1 inches. An operator said its rear door lifts had an overhead clearance of 69 inches and its front door lifts had a clearance of 72 inches. No comments were received on the proposed door height requirement for vans and small buses.

Response. The proposed door closing force requirements were from an ANSI standard for power doors (ANSI A156.10–1985, §§ 9.8 and 9.9), usually used inside buildings and facilities. The NPRM asked whether this requirement was suitable for vehicles and, if not, what standards should be applied. The commenters supplied extensive reasons why this standard could not be applied to moving vehicles due to the need to keep doors closed through turns and to resist air pressure when traveling at highway speeds. The arguments are persuasive that the standard cannot be applied to vehicle doors. On the other hand, few comments were received on what an appropriate minimum standard would be since the requirements seem to vary according to the operating environment. There is a closing force requirement for rear doors contained in the White Book but it does not apply to other doors. The Board believes that it does not have sufficient information on which to base a minimum door closing force at this time. The issue will be further considered when the Board revises and updates the guidelines.

The proposed door width requirement is designed to make the vehicle accessible to persons with disabilities who do not use wheelchairs or mobility aids. With the overwhelming support by the transit industry for permitting such individuals to use the lift, the Board has determined that the door width requirement is unnecessary. A door height requirement for large buses has been added to § 1192.25(c) however, consistent with comments. The door height requirement for small buses and vans which had no opposition has also been incorporated in paragraph (c).

Section 1192.27 Priority Seating Signs

Comment. A transit organization and an operator said that the letter size specified in § 1192.27(c) for priority seating signs would limit the amount of information on the sign. APTA said that a second set of seats should be designated as priority seats if the fold down seats over the securement area are designated as priority seats. An operator asked whether fold down seats could be designated as priority seats. Another commenter said that the sign should indicate that use of the seats is voluntary on the part of the person with a disability.

Response. The Board acknowledges that the letter size limits the amount of information but believes such signs should be legible to persons with vision impairments. The anticipated sign is relatively simple and can be brief. The designation of an additional set of priority seats is up to the discretion of the operator. There is nothing in the provision which prohibits designation of the fold-down seats, when not used for securement. The issue of requiring persons with disabilities to use such seats is addressed by the DOT regulations.

Section 1192.29 Interior Circulation, Handrails and Stanchions

Comment. Three transit operators, a transit association, a manufacturer and a government accessibility agency supported the performance requirement for maneuverability as adequate without additional specificity. One organization representing individuals with disabilities said that a 36 inch clearance should be specified. Another commenter noted that clearance is a problem but made no recommendation.

In response to a question in the NPRM, two individuals with disabilities or their organizations, an operator and a government accessibility agency said that a 1½ inch knuckle clearance should be provided for handrails. A manufacturer said that the 1½ inch clearance was the industry standard and should be maintained. The ABA and a manufacturer said the requirement for not wedging a passenger's arm was too subjective and a sepcific number should be provided.

Two individuals with disabilities or their organizations said that overhead handrails should be required in all vehicles. A transit association said that overhead handrails should not be required in paratransit vehicles. A manufacturer said that the requirement for a handrail across the fare box should be eliminated. A government accessibility agency said that handrails should be continuous from door to seating and the ANSI A117.1 standard should be followed. Two commenters suggested that the handrails contrast with the background and have yellow bands every 6 inches.

Response. The characteristics of vehicles, especially when the lift or ramp is located in the front door, do not lend themselves to the common accessibility standard applied to buildings and facilities. The Board recognizes that the provision of a 36 inch aisle is desirable but that is not always possible on all vehicles. Until further investigation on maneuvering space is conducted, the performance requirement should suffice. The need for more specificity will be considered when the guidelines are revised and updated.

Based on the comments, the Board has added dimensional requirements for handrails in § 1192.29(b)(1). As to the requirement for an overhead handrail, this is currently required by 49 CFR 609.15 for vehicles in excess of 22 feet. Section 1192.29(c) has been revised to be consistent with that regulation. The design of small vehicles is such that overhead handrails may not be needed or practical, due to the generally much lower ceiling.

A new § 1192.29(f) has been added on interior height to be consistent with § 1192.25(c). The height requirement is taken from the UMTA sponsored guideline specifications for active wheelchair lifts and is a minimum requirement. The operator may specify a greater height.

Section 1192.31 Lighting

Comment. Two individuals with disabilities or their organizations supported the provisions regarding lighting in stepwells and doorways. A government accessibility agency recommended 5 footcandles for stepwells and doorways based on UFAS requirements for elevators. A manufacturer recommended 10 footcandles in the boarding area and 15 footcandles for the fare box area in accordance with recommendations of the Illumination Engineering Society. The ABA and a manufacturer said that current lighting meets the section.

The NPRM proposed to require that outside lights provide at least 1 footcandle illumination on the street for a distance of 3 feet beyond the lift platform or ramp. A manufacturer and an operator said the provision could not be met without extremely bright lights.

Response. The lighting provisions are based on the current requirements in 49 CFR 609.15 for buses in excess of 22 feet in length. The higher illumination levels in UFAS suggested by one commenter apply to elevators inside buildings and facilities. Bright lighting on buses operating at night, however, might actually have the opposite effect

intended. Lighting levels which are too high inside or just outside the door could result in a disembarking passenger's eyes not adjusting to the darker surroundings and might actually create a more serious problem than it solves. Also, high lighting levels inside the vehicle cause reflections from windows and reduce the ability to see outside. Because the Board does not have sufficient information to evaluate the appropriateness of the various recommendations, the proposed interior lighting levels, as derived from existing UMTA requirements for buses, have been retained.

With respect to exterior lighting levels, the lift or ramp may extend as much as 4 feet beyond the bottom step which would require the illumination to extend as much as 7 feet beyond the bus step under the NPRM provision. The Board is persuaded that such a requirement is not reasonable without significantly brighter lighting which could be a problem for some people entering the vehicle, especially persons using wheelchairs or mobility aids who are at a much lower height than others. Accordingly, the section has been revised to incorporate only the provisions of 49 CFR 609.15, with minor editorial changes.

Section 1192.33 Fare Box

Comment. APTA, another transit association, eight operators and a manufacturer supported the provision regarding location of fare boxes. In response to a question in the NPRM, three individuals with disabilities or their organizations, a government accessibility agency and another commenter said that more specificity was needed with respect to maneuvering space. One commenter suggested specifying a 36 inch clear width at all points, and another suggested requiring a 42 inch clearance to the right rear of the fare box. A government accessibility organization recommended following the UFAS provisions for protruding objects and space allowances.

One commenter said that the fare box should meet the UFAS requirements for controls and operating mechanisms, and for signage. An operator said that recessing the fare box or placing it too close to the dashboard would interfere with emptying it.

Response. As discussed previously, certain accessibility standards which are applicable to buildings and facilities cannot be applied to vehicles. For example, in some buses the space between wheel housings is less than 36 inches. Therefore, to impose a requirement for an access aisle to be 36 inches would force all lifts or ramps to be in the rear door. The Board believes there are good reasons for selecting both front and rear door lifts and does not want to preclude either. The Board did not receive sufficient information on the interior space for different vehicles. Pending further research on the space limitations of various vehicles, the Board believes it cannot be more specific.

Over the years changes in fare box design have increased the space requirements, especially for electronic processing. The proposed requirement is to alert operators and others who prepare specifications to plan carefully for maximum space in the vestibule. If new information or designs are developed, the Board can consider further requirements later. Requirements for controls and operating mechanisms have not been added because controls which do exist are rarely used by the passenger. Similarly, information posted often relates to fares, which is often temporary so the signage requirements have not been imposed. Accordingly, the section has not been changed.

Section 1192.35 Public Information System

Comment. Many commenters supported the proposed requirements regarding public information systems. A manufacturer pointed out that buses built to the White Book specifications would have an internal public address system. Two operators and a government agency opposed public address systems. Several commenters, including APTA, said that external speakers should not be required. Several commenters also said that public address systems were not needed on vehicles used in demand responsive service.

With respect to providing information for persons with hearing loss, several commenters noted that magnetic induction loops served few people and were expensive. Some commenters said that a visual system would serve more people.

Response. The provision of an internal public address system was supported by most comments and is a component of the White Book. The provision of an external speaker was opposed by many operators on the grounds that it might be intrusive in residential areas, especially at night, and would not be needed where a bus stop was used by only one line. Since DOT has proposed in its regulations to require operators to use public address systems if they are provided, external, as well as internal, systems would have to be used. DOT has indicated that there is evidence that an external speaker in some noisy areas might not be the best means of delivering information and is proposing to conduct a study on the effectiveness of such devices. Accordingly, the requirement for an external speaker has been deleted, pending the DOT study. The Board will further consider this issue when it revises and updates the guidelines.

The requirement for an internal public address system has been applied only to vehicles in excess of 22 feet in length that are used in fixed route service with multiple stops. A shuttle vehicle which only connects two points, or a vehicle used in demand responsive service which transports passengers directly from origin to destination, does not need to announce stops. The requirement has been limited to large vehicles since vans and small buses have seats close to the driver and a public address system would be superfluous.

With respect to the provision providing information for persons with hearing loss, the Board did not intend to imply that a magnetic induction loop was the only appropriate technology, or even an acceptable one. Other types of assistive listening devices may provide better accommodation to a broader range of people but, since they require the use of a specific receiver, the provision of such systems in buses or most transportation vehicles is not practical. Also, assistive listening devices would not help individuals who are deaf. The provision of digital read-out or light emitting diode (LED) signs would serve more people but requires keyboard or other input which cannot be accomplished by a bus driver. Automatic systems may be practical under some limited circumstances but buses are often assigned to different routes throughout the day and no information was provided on a system which would meet the requirements. Indeed, some of the other systems required, such as the "stop request" discussed below, address some of the needs. Unfortunately, the absence of a clear idea of an appropriate system would place transit entities in the position of not knowing exactly what to specify from manufacturers when purchasing a new vehicle. The Board considers the provision of information to persons with hearing loss to be an important matter but lacks the information on which to base a requirement. Therefore, the provision has been reserved pending further investigation. In the meantime, advisory material has been placed in the appendix.

Section 1192.37 Stop Request

Comment. Three operators and two other commenters supported the provision regarding stop request controls. A bus manufacturer said that a "dual" system for wheelchair and mobility aid users and other passengers was currently provided on its buses.

Response. The provision does not require a "dual" system, only that the system alert a driver that a wheelchair or mobility aid user needs to alight. This may not be a problem in front securement locations but may be for rear locations, especially on a full bus. The general support for the provision convinces the Board that the provision should be retained. However, the requirement has been revised to apply to large buses only.

Section 1192.39 Destination and Route Signs

Comment. A manufacturer and another commenter supported the provisions regarding destination and route signs. Two commenters said that the letter heights were too small. Two other commenters suggested that the route numbers should have 6 inch letters and the destination information should have 4 inch letters. A government accessibility agency suggested 7 inches and 5 inches, respectively. Another commenter said that front letters should be 3 inches high and those on the side 2 inches high. One commenter said that the letters should be the maximum attainable. Two commenters suggested a detailed set of specifications and noted that the proposed provision was contradictory in specifying wide spacing while at the same time allowing the space to be 1/16 the height of upper case letters.

Two commenters said that LED headsigns should be banned. An operator said that LED head signs should be expressly permitted. Another operator said that sign "curtains" (translucent signs on rollers) should be provided. A manufacturer provided detailed specifications for electronic signs. Another commenter said that the guidelines should limit the length of the message display.

Response. The signage provisions are based on the guidelines for buildings and facilities which in turn are based on Board sponsored research. It should be noted that the description of "wide" as 1/16 the height of upper case letters is the definition of "wide" as used in the industry, as reported by the research. This spacing and proportion was tested with blind and visually impaired subjects and found to be usable. The comments which recommended other standards did not indicate whether those suggestions were based on research and did not provide any justification. Accordingly, the provision has not been changed except to delete the reference to the contrast formula in § 1192.25(b) which was deleted.

Many people, not only those with visual impairments, have trouble with LED and other electronic headsigns. However, the Board lacks specific information to address this issue. It was not clear whether the detailed specifications supplied by one manufacturer were based on research with persons with low vision or whether they were product-specific.

Subpart C—Rapid Rail Vehicles

Section 1192.51 General

Comment. Several commenters requested that the guidelines address the one-car-per-train rule. One commenter recommended that previously purchased vehicles meeting accessibility standards in effect at the time of purchase should be considered accessible under the one-car-per-train rule. Other commenters suggested that exemptions be provided from some of the requirements or that existing cars be required to be accessible "to the maximum extent feasible."

Response. A new paragraph has been added to § 1192.51(c) that sets out the accessibility requirements for vehicles that are retrofitted to meet the one-car-per-train rule. Such vehicles must have at least one door that provides a 32-inch clear width as required by § 1192.53(a)(1); is designated as accessible as required by § 1192.53(b); and is coordinated with the boarding platform at new and key stations in accordance with § 1192.53(d). Section 1192.53(d) has been revised to include several exceptions on horizontal gap and vertical displacement, including specific variances for retrofitted vehicles. Further, such vehicles must have designated priority seating and slip-resistant floor surfaces as required by §§ 1192.55 and 1192.59, respectively. Handrails and stanchions must be placed in accordance with § 1192.57(b) to allow for a 32-inch route leading to a clear floor area 48 inches by 30 inches where mobility aid users can position themselves. Since rapid rail vehicles typically provide room for standees, this requirement should not necessitate removal of any seats, and the provision makes this explicit. These requirements represent what the Board considers to be the absolute minimum in ensuring that a vehicle can be entered and used by persons using wheelchairs or mobility aids. The Board anticipates that the cost impact will be minimized by the fact that since 1976 all rapid rail cars purchased with federal funds have been subject to the requirements under 49 CFR part 609 or DOT regulations implementing section 504 of the Rehabilitation Act of 1973. The Board wishes to emphasize that retrofit of existing vehicles is not required by the ADA or these guidelines, and that this provision applies only when transit operators specifically choose to retrofit vehicles in order to meet the one-car-per-train rule.

Section 1192.51(c) also allows those vehicles that were designed or manufactured according to earlier accessibility standards under 49 CFR part 609 or DOT's section 504 regulations, to be used to meet the one-car-per-train rule.

Section 1192.53 Doorways

Comment. Seven comments, most from transit operators, opposed the requirement that vehicle end doors have a clear opening of 30 inches. This opposition was based primarily on the argument that this provision will not ensure accessible evacuation since an accessible route to such doors is often not provided and is not required. Further, evacuation from a vehicle may not be feasible in some transit systems, especially those operating in tunnels, because of narrow walkways, catwalks, and escape ladders that are part of evacuation routes. Two other transit operators recommended that this provision apply only to new cars since retrofitting the doors of existing cars would be extremely expensive and possibly require the relocation of structural members, namely collision posts. Two additional commenters supported this requirement.

Response. The Board has revised the provision proposed in the NPRM so that the final rule addresses the issues raised by commenters. First, the Board is aware of the significant cost and complications in retrofitting end doors and emphasizes that this provision pertains only to new cars. Second, existing cars or cars retrofitted under the one-car-per-train rule are not subject to this requirement. Third, the Board has revised the requirement so that it applies only to vehicles that are designed with a route at least 30 inches wide which is not interrupted by stairs leading to the end doors and further, the provision does not contain a requirement that such a route be provided. No comments were received indicating that this requirement would not be feasible or have a significant impact on the cost or design of new cars.

The Board understands that in some transit systems evacuation from vehicles and along tunnels or tracks may not be feasible for wheelchair or mobility aid users. This requirement was not proposed as a means of ensuring accessible evacuation from trains, per se, but between cars in the event of emergencies or if the doors fail in one car. Since the clear area in which mobility aid users can position themselves is usually located at the ends of cars, the end doors will most likely be in close proximity to accessible spaces. Additionally, the Board recognizes that this provision does not guarantee access into adjoining cars since existing cars may not have end doors with 30 inches of clear width. However, as old cars are replaced over time and the number of accessible cars on each train increases, the chances of access between cars will be greater. Also, as one comment noted, not all systems have end doors connecting cars. The provision applies only if end doors are provided.

Comment. Several commenters said that the proposed maximum door closing force of 15 lbf is insufficient under certain conditions, such as snow, ice, or wind, or when debris is present in the door track and that door closing failures will increase dwell times.

Response. The proposed door closing force was derived from ANSI standards for interior automatic doors and does not take into account, as pointed out by commenters, the exterior conditions to which vehicles are subject. The levels of force used or recommended by transit operators varied considerably from over 15 lbf to 30 lbf. There were no comments in support of the 15 lbf maximum. Based on these comments, the Board feels that further study of vehicle doors and the environment in which they operate is necessary. Consequently, the maximum door closing force requirement has been deleted.

Comment. Two transit operators said that the proposed maximum door closing speed of one foot per second is too slow and will increase dwell time.

Response. The Board believes that further study is needed on door closing speeds and the effects on operation schedules. There were no comments supporting this requirement. Therefore, the proposed requirement has been deleted pending further study.

Comment. The NPRM proposed that if all vehicles are accessible, the international symbol of accessibility shall not be displayed on new vehicles. The NPRM asked whether the international symbol of accessibility should be removed when a previously inaccessible system achieves 100% accessible vehicles. Three commenters supported removal of the symbols and two commenters opposed removal. Two other commenters said that the matter should be left up to transit operators.

Response. The Board has decided that the removal of the international symbol of accessibility should not be required since it would involve changes to existing cars, which are not generally covered by these guidelines. Further, a requirement that the symbol be removed would conflict with existing regulations at 49 CFR 609.17 which require the symbol. The provision has been amended so that it applies only to those systems in which all cars are accessible and are not identified by the access symbol. Where all cars are marked, designation of new cars would be allowed. This will ensure consistency within a fully accessible system so that all cars are either marked or unmarked. However, the Board considers the access symbol to be at times subject to over-use and thus recommends that transit operators remove symbols when all cars are accessible. Since cars are usually designated by decals, which eventually wear and must be replaced, operators may opt to simply not replace them.

Comment. Several commenters supported the provision of auditory and visual signals to alert passengers of closing doors. Some commenters stated that visual signals are not necessary since hearing impaired persons can see that the doors are closing.

Response. Audible signals are required by existing DOT regulations (49 CFR 609.17). Audible signals usually activate before the doors begin to close, and thus provide advance warning. Without visual signals, hearing impaired persons are not afforded any equivalent advance warning and can only detect closings as the doors actually begin to close. The only comments received concerning the complications or costs involved in providing such signals concerned the retrofit of existing vehicles which is not required by these guidelines. One major rail manufacturer, in addressing this issue in regard to commuter rail cars, stated that the addition of audible and visual warning signals for automatically-operated doors is feasible and represents only a modest cost increase for a buzzer and light at each doorway and associated electrical controls. In the absence of any contrary information on cost or feasibility, the requirement for visual signals has been retained as a means of providing equal access to hearing impaired persons. Additionally, since the Board has removed the requirements for door closing force and speed, it considers the provision of signals that are accessible to both hearing and visually impaired persons to be of even greater importance.

Comment. The proposed horizontal and vertical gap requirements were of particular concern to a variety of transit operators who noted that a 3 inch horizontal gap would be difficult to provide. The reasons were not clearly explained by any of the operators except those who discussed stations that have curved platforms. The Bay Area Rapid Transit (BART) District recommended a nominal horizontal gap of 3⅜ inches plus or minus a ½ inch, which it currently specifies. The Metro-Dade Transit Agency (MDTA) allows a 3¼ inch horizontal gap and noted that no incidents or accidents pertaining to this gap have been reported. The Metropolitan Atlanta Rapid Transit Authority (MARTA) recommended a nominal gap of 3½ inches with a ½ inch tolerance. The Massachusetts Bay Transportation Authority (MBTA) is required to maintain a maximum 4 inch gap which it claims is easily achieved. Two other transit authorities recommended that a performance standard be specified.

With respect to technologies to reduce horizontal gaps, one transit authority had examined mechanical ramps used by some European systems and had found that their installation would require extensive redesign of both cars and stations. The Paralyzed Veterans of America (PVA) suggested that a study be conducted on how gaps can be reduced.

In response to a question on gap-related accidents, the New York Metropolitan Transportation Authority (MTA) said that 29 accidents related to gaps were reported in 1990, none of which were serious or involved persons using wheelchairs or mobility aids. PVA noted that 4 accidents occurred within the Washington Metropolitan Area Transit Authority (WMATA) system in which persons fell from their wheelchairs when casters of 5 to 6 inches were caught in gaps.

Several transit authorities considered the ⅝ inch vertical gap requirement as difficult to maintain due to wheel wear. The Los Angeles County Transportation Commission (LACTC) agreed that new cars can be designed to maintain a ¼ inch vertical gap but stated that a ⅝ inch tolerance represents an "onerous maintenance requirement." According to MTA, maintaining a ⅝ inch tolerance will require continual replacement of worn track and wheels, increase wheel maintenance costs an estimated $1 million each year, and take many cars

temporarily out of service. MBTA stated that the 2 inch vertical requirement it is currently subject to is easily met. APTA supported the ⅝ inch requirement in its comments on transit facilities. DOT discussed this provision with its Advisory Committee and the Committee, including representatives from rapid rail operators, agreed that the proposed guidelines were reasonable for new vehicles in new stations.

No further information was received concerning the feasibility and costs of a ⅝ inch versus a 1 inch tolerance for vertical gaps.

Response. In response to the concerns raised in the comments, the Board has included a series of exceptions in the final guidelines which address the issues raised. First, the 3-inch horizontal and plus-or-minus ⅝ inch vertical requirements apply only to new vehicles in new stations. Second, new vehicles may vary as much as plus-or-minus 1½ inch from the platform height in existing stations, to account for possible variance in platform height. Also, the gap requirements only apply to new stations and those designated as key stations, rather than all stations. Third, the gap requirements for key stations apply to only one door of an accessible vehicle, since, at a curved platform, all doors are not equally close. Fourth, existing vehicles retrofitted to meet the one-car-per-train rule are allowed to have a 4-inch horizontal and plus or minus 2-inch vertical gap, since it is neither structurally feasible nor cost effective to achieve compliance with the new-vehicle standards.

The Board proposed a 3 inch horizontal gap because, in new systems, it is common and, as confirmed by members of DOT's Advisory Committee, easily achievable. While several transit systems have recommended wider gaps, no information was submitted indicating that the 3 inch gap is difficult to provide for new vehicles or systems. The main problem posed by gaps is that the front wheels or casters of wheelchairs or mobility aids can turn, slip down, and get caught in the gap, possibly causing the user to pitch forward out of the wheelchair or mobility aid. Since front casters range in diameter from 2¾ inches to 8 inches, the Board feels that a maximum 3 inch gap will prevent most accidents of this nature. PVA, however, indicated that a 3 inch gap "would easily permit" casters to get caught and recommended that the Board study how the gap can be reduced to the width of casters, many of which are only one inch. Further, the width of the horizontal gap affects the caster's approach to the vertical tolerance. The wider the horizontal gap, the farther the caster will dip within the space, which, as a practical matter, increases the vertical distance over which the caster must be pushed.

Although two transit operators thought that the ⅝ inch vertical tolerance would be difficult to maintain due to wheel wear, the consensus among members of DOT's Advisory Committee was that this tolerance could be maintained without significant maintenance or replacement of wheels or track. In those unique instances where a new rapid rail system could not meet these gap requirements, the operator would be able to pursue alternative means of reducing gaps under the procedure for equivalent facilitation contained in 49 CFR part 37. Further, the Board has included a provision for dimensional tolerances in § 1192.4. With these factors in mind, the Board has retained the horizontal and vertical gap specifications for new vehicles that will operate in new stations in the belief that adequate provision has been made where these requirements cannot be met.

One commenter recommended that the exception should also apply to existing vehicles as well since the problem is with stations, not vehicles. Since this requirement would be triggered by the construction of a new station and not the acquisition of vehicles, the exception has been provided in the Board's guidelines for transportation facilities published elsewhere in this issue of the **Federal Register**.

Cars that are retrofitted to meet the one-car-per-train rule would need to have one door that meets these gap requirements. While the Board does not consider such a gap to be desirable, such vehicles will eventually be phased out of the system. In view of the cost and difficulty of bringing such vehicles into conformity with the new vehicle standards, the Board has provided this exception so that scarce financial resources can be used for other purposes, such as key station access. A system could, as one comment suggested, designate one location where such tolerances are achieved along a portion of a curved station platform.

Section 1192.55 Priority Seating Signs

No comments were received on this section. As discussed under § 1192.27(c) for buses, the contrast formula has been deleted.

Section 1192.57 Interior Circulation, Handrails, and Stanchions

Comment. A transit authority recommended that the wheelchair or mobility aid space be 44 inches by 30 inches instead of 48 inches by 30 inches. MTA recommended a wider diameter for handrails to protect against vandalism. Another commenter expressed support for overhead handrails running the full length of the car since they are of great assistance to visually impaired persons.

Response. As discussed under § 1192.23(b), the 48 inch by 30 inch space allowance is required by accessibility standards for buildings and facilities. It is recognized as the absolute minimum amount of space that is needed to accommodate a wheelchair or mobility aid user. A length of 44 inches does not take into account the space that is needed for toe clearance. In response to the recommendation for wider handrails, it would appear that the securement of a handrail and the strength of the material are more pertinent than the diameter in safeguarding against vandalism. Also, as discussed under § 1192.29, conventional handrail specification practice actually results in an outside diameter of 1.6 to 1.8 inches. Due to the variety of car designs and layouts, the Board has provided a requirement for interior circulation that is performance-oriented and does not think it is practical to require specific elements such as overhead handrails.

Comment. The NPRM asked whether further specification was needed for maneuvering space and the placement of handrails and stanchions. Two transit authorities supported the proposed performance requirement and recommended no further specifications. Four commenters favored more specification, including provision of a 5 foot turning circle; location of the wheelchair or mobility aid space immediately inside the doors; a 36 inch route to the accessible space; and placement of stanchions 1½ inches from adjoining surfaces.

Response. A 5 foot turning circle may not be easily provided in the confined space of a rail vehicle. Further, such an area, which could not be kept clear of standees, could possibly cause stanchions to be located farther away from the doorway. The Board did not require a specific location for the 48 inch by 30 inch accessible space, such as immediately within the doorway, because it thinks that wheelchair or mobility aid users should have as many options as possible in positioning themselves in the car. Depending on how crowded a car is, some persons may prefer to position themselves near the doorway while others might be more comfortable further inside the car. Also,

the designation of a space immediately inside doors may disrupt the normal flow of passenger traffic, although this is often the area selected by users of most accessible rapid rail systems. The Board agrees that further specification regarding the route leading from the doors to areas where wheelchairs and mobility aids can be positioned would help to ensure that vertical stanchions do not interfere with circulation. However, the Board has specified a width of 32 inches instead of the recommended 36 inches, since the doors are required to be 32 inches. Further, 32 inches is consistent with the minimum passage width required for commuter and intercity rail cars. A requirement has been added that stanchions and handrails be mounted at least 1½ inches from adjoining surfaces, consistent with accessibility standards for buildings and facilities.

Comment. Only one comment was received which specifically addressed the number of spaces to be provided in rapid rail cars for wheelchair and mobility aid users. This comment, submitted by a transit authority, indicated that providing more than one space or "bay" would cause the loss of 2.7% to 4.6% of seats depending on the class of car and that since applicable loading guidelines require 4 seats for every 3 passengers during on peak, more cars may be required for each train.

Response. The comment assumes a need to remove seats or to actually designate a wheelchair or mobility aid location. This is not required or recommended. Typically, the required 48 inch by 30 inch space can be accommodated in the area near doorways normally provided for standees. Only allowance of this space, not its designation, is required. In light of the broad support for the provision of at least two spaces for wheelchair or mobility aid users, the Board is requiring that at least two such areas be provided in each rail vehicle.

Comment. The NPRM asked whether securement devices should be required on rapid rail vehicles. Most transit operators and organizations representing individuals with disabilities who responded to the question agreed that securement devices should not be required on rapid rail vehicles because the modest acceleration and deceleration forces of and the absence of available operator assistance make the provision of securement devices unnecessary and impractical.

Response. The comments are consistent with a study conducted for the Department of Transportation which concluded that securement devices are not needed on rail systems. See Elements of the R&D Plan for Improving Transit Accessibility for the Elderly and Handicapped: The Need for Wheelchair Fastening Equipment in Rapid Rail Transit Vehicles, Alan J. Warshawer Associates (1980). The guidelines do not require securement devices for rail vehicles.

Comment. The NPRM also asked whether a handrail or stanchion should be required immediately adjacent to the wheelchair or mobility aid space. Four commenters said that a handrail or stanchion should be required and one said that it should only be recommended. There were no comments against such a requirement.

Response. Although the Board is inclined to agree that a handrail or stanchion should be available beside the wheelchair or mobility aid space, the intent has been to provide guidelines that cannot be misinterpreted as requiring or recommending specifically designated locations. As discussed above, the Board considers it important that wheelchair and mobility aid users have as many options as possible in positioning themselves in view of the crowding that can take place and the limited time allowed to enter or exit the vehicle. The installation of a handrail or stanchion to serve accessible spaces may serve as a designation of a specific space that persons with disabilities may feel compelled to use or operators may feel compelled to designate or require persons to use. In addition, unless carefully designed and placed, such handrails or stanchions could impede rather than facilitate access. Consequently, the Board has only recommended the provision of such handrails and stanchions in the appendix with an explanation that they should be installed in the vicinity of accessible areas and should not serve to restrict or reduce the available clear floor area where mobility aid users can choose to position themselves.

Section 1192.59 Floor Surfaces

As discussed under § 1192.23(b)(3), the Board has not specified a coefficient of friction for slip resistant surfaces and is keeping this requirement as a general performance standard similar to the provisions in the ANSI A117.1 Standard.

Section 1192.61 Public Information System

As discussed under § 1192.35, the Board proposed a performance requirement in the NPRM for buses to have an information system that can provide the same or equivalent information in a form usable by persons with hearing impairments. The Board had reserved analogous provisions for other modes in the NPRM until public comments to the docket on this issue could be reviewed. Based on the information received, the proposed performance requirement cannot be easily met. Further, the Board recognizes that operational and procedural methods may be effective in providing an equivalent level of communication accessibility. DOT has indicated that it plans to study the availability and feasibility of technological solutions. Consequently, the Board has decided to continue to reserve this provision until further study is completed.

Comment. The NPRM proposed that at least one vehicle in each train be equipped with an external public address system. Four comments from individuals with disabilities or their organizations and one comment from a transit authority thought that the requirements should apply to more than one vehicle (e.g., every 3 or 4 cars or all cars). Most said that an external system on only one car would be impractical since only those persons located near that car would be able to hear the announcements. Typically, waiting passengers would not be able to determine in advance which car was so equipped. Two transit authorities opposed the provision, expressing concern about local opposition to external announcements where rail lines operate in quiet residential areas. Another transit agency suggested that the provision not apply to single line trains where all stops are made.

Response. The Board is aware of rapid rail systems that have installed external speakers which have proven to be effective and has retained this requirement for rapid rail vehicles. Based on the comments, the Board had revised § 1192.61(a) to require each new vehicle operating in stations having more than one line or route to have an external public address system. The concern about the operation of external speakers in quiet residential neighborhoods is well-taken. In response, the Board notes that transit operators have full discretion over the volume of external announcements and that a minimum decibel level is not specified by this provision.

Comment. Four commenters were opposed to providing an exception for external train speakers where a station-based system announces arriving trains. They stated that station announcements are often difficult to understand due to the noisy environment or the quality of the address system and that an external train speaker would be useful. One commenter thought that the exception

should apply only where station announcements are made in both an audible and visual format. One transit authority thought that it should apply to stations that provide either audible or visual announcements. Three comments were generally supportive of the exception.

Response. Due to the confusion that may be caused from announcements made from two different sources (e.g. stations and vehicles), the Board has retained this exception. The poor station acoustics mentioned in some comments will also affect train-based announcements in those stations. The Board anticipates that appropriate signage on the trains will provide necessary information to those who cannot hear the announcements.

Section 1192.63 Between-Car Barriers

Comment. A majority of commenters, including the American Foundation for the Blind and the American Council of the Blind, supported the provision of between-car barriers. MTA noted that its cars have gates or have been equipped with chains in response to accidents that have occurred when passengers mistakenly stepped between cars. Another transit authority supported this provision as it applies to new cars. Only one transit authority opposed this requirement. This authority argued that to install such barriers would require substantial redesign of existing and future cars. Another transit agency stated a preference for detectable warnings since many between-car barriers function only as a warning instead of an actual barrier. A transportation engineering firm noted that since doors are not usually located at the end of rapid rail cars, barriers would be needed on the platform along the space in front of and behind trains to be of any use and would require that all trains be of the same length.

Response. The comment arguing that installing between-car barriers will complicate the design of new cars did not include any cost estimates or supporting data. The provision affords considerable latitude to transit operators in providing such barriers. No specific solution or device has been required. While the installation of pantograph gates may cause redesign of new cars, other viable options, such as chains, are allowed which easily can be added to new cars. These guidelines do not require existing or retrofitted cars to be equipped with such devices. Detectable warnings, as recommended by one commenter, are required by the Board's guidelines for transportation facilities. However, detectable warnings along platform edges are not an effective substitute for between-car barriers since many accidents involving visually-impaired persons result not only from the failure to detect the edge of the platform but in mistaking the space between cars as a doorway. In regard to the comment about doors located away from the ends of cars, the Board does not believe this has any bearing in preventing visually-impaired persons from stepping between cars. Although between-car barriers will not prevent someone from falling off the platform in front of or behind a train, the Board does not see this as part of a rationale for not requiring barriers between cars at all.

Comment. The NPRM requested information on the feasibility and costs of chains, pantograph gates, or other devices such as motion detectors. One transit authority thought that pantograph or spring gates are more effective since chains would need to be several feet long to accommodate sharp turns and thus might be at too low of a level when cars were stopped at a station in their normal position. This could be addressed by mounting chains at a higher level or, as one transit provider has done, by attaching a spring or coil to the chain that will allow slack for turns but will otherwise keep the chain taut. Two commenters recommended specific chain mounting heights. A government agency commented that chains and gates are not close enough to the edge to actually prevent someone from falling over the edge. One transit authority and the American Council of the Blind recommended pantograph gates. Another transit agency disapproved of specific solutions, such as spring gates, requiring manual connection and disconnection as a hazard to employees. Another commenter recommended that certain design solutions, such as chamfering of vehicle corners, be allowed. No cost estimates were received.

Response. There was no clear consensus among the comments favoring any of the possible devices that may be used, as a between-car barriers. As for recommendations on the mounting height of devices such as chains, the Board feels that it does not have enough information on which heights would be most effective in preventing accidents. As noted by some of the comments, the Board does acknowledge that some devices, such as motion detectors, will only warn rather than actually prevent a person from stepping off of the platform and has modified this provision accordingly so that barriers are required to prevent or "deter or warn" persons from stepping between cars.

Although the Board does not require or recommend one device or solution over another, it would point out, as did some of the comments, that spring or pantograph gates are more effective than chains or motion detectors in stopping a person from stepping over the platform edge. Chains, if mounted high enough, may do the same too but if mounted at a low height may serve only as a warning to visually-impaired persons using canes. Motion detectors are strictly a warning device and will not physically restrict someone from stepping between cars. Operators concerned about the manual connection and disconnection of spring gates could specify pantograph gates, motion detectors, or other devices.

Subpart D—Light Rail Vehicles

Section 1192.71 General

Comment. One commenter requested that language be added to this section noting that vehicles purchased after August 26, 1990, and before the effective date of these guidelines are accessible under the interim standards in effect during this period even though such vehicles may not meet all the requirements of the subpart.

Response. The effective date of the accessibility standards based on these guidelines will be addressed by the DOT regulations.

A new paragraph has been added for existing vehicles that are retrofitted to meet the one-car-per-train rule. Such vehicles must have at least one door that provides a 32 inch clear width in compliance with § 1192.73(a)(1); be designated as accessible as in accordance with § 1192.73(b); and be coordinated with the boarding platform at new and key stations in accordance with § 1192.73(d), including applicable exceptions. An accessible means of entering the vehicle complying with § 1192.83 must be provided, as well as a 32 inch route leading to a clear floor area as required by § 1192.77(c). Further, such vehicles must have designated priority seating and a general performance requirement for slip-resistant floor surfaces as required by §§ 1192.75 and 1192.79(a), respectively.

Comment. Two commenters recommended that § 1192.71(b) reference or take into account the development of low-floor light rail vehicles. Another commenter recommended an exception for low-level, step-entry vehicles that are used system-wide.

Response. This subpart does not preclude the development or use of low-floor vehicles as long as they are accessible either by operating on a level-boarding system or by being equipped with a lift, ramp, or bridge plate in accordance with § 1192.83. The Board does not have the authority under the ADA to exempt any class or type of vehicles, including low-level, step-entry vehicles, from these guidelines. The Board wishes to emphasize that retrofit of existing vehicles is not required under these guidelines. Further, in cases where new or remanufactured cars cannot be made to comply, transit operators may investigate alternative means of providing access under the equivalent facilitation provision in § 1192.2.

Comment. One commenter noted that § 1192.71(b) (1) and (2) should be modified so that it is clear that level boarding is not required at key stations on systems built prior to January 26, 1993.

Response. As discussed above, the DOT regulations will address the effective date of the accessibility standards based on the guidelines. A reference to the applicable DOT regulations has been added to § 1192.71(b)(1).

Section 1192.73 Doorways

Comment. One transit agency objected to the proposed door closing force and speed requirements. Two other transit agencies recommended higher closing speeds.

Response. As discussed under § 1192.53, the door closing force and speed requirements have been deleted from the final guidelines.

Comment. One transit organization opposed the 30 inch requirement for end doors, suggesting that these guidelines should mandate design only for elements that are commonly used, not those used only in emergencies. Further, the commenter noted that the use of these doors would be limited since there is no requirement that they be located on an accessible route. A transit agency stated that light rail vehicles generally are not equipped with end doors.

Response. The Board has revised the provision proposed in the NPRM so that the final rule addresses the issues raised by commenters. First, the Board is aware that it would be costly if not impracticable to widen doors on existing cars and emphasizes that this provision pertains only to new vehicles and does not require the retrofit of end doors on existing cars.

Second, the Board agrees that end doors not on a route usable by mobility aid users should not be required to be 30 inches wide. Consequently, this provision has been modified so that it applies only to those doors that are connected to accessible spaces by a route at least 30 inches wide which contains no steps. Additionally, this provision does not require that end doors be provided in cars that are not designed with such doors.

The Board did not receive comments with respect to light rail vehicles on the incremental costs associated with this provision.

Comment. One transit system that provides photo-electric sensors considered the requirement for auditory and visual signals to alert passengers of closing doors as unwarranted and costly. Actual cost estimates, however, were not provided.

Response. Audible signals are required for light rail vehicles by existing DOT regulations at 49 CFR 609.19. As discussed under § 1192.53, the Board considers visual signals essential in providing equivalent warning to hearing impaired persons that the doors are about to close. The Board did not receive any information that visual signals are expensive additions to the design of new vehicles. For these reasons, the Board has retained this requirement.

Comment. One transit provider noted that bridge plates would be required to meet the 3 inch gap specification since swing-plug or outward-folding doors, which are commonly used, require substantial clearance. Another transit operator stated that its system needs a 4½ inch gap because of the dynamic envelope and the clearance needed for plug type doors which are required by the constraints of the vehicle. This operator also noted that existing platforms were built 1 inch below the vehicle floor height to allow for wheel wear and that retractable bridge plates would be "technically impractical" because of the high/low step mechanism.

Response. The Board believes the series of exceptions to the general provision for platform and vehicle floor coordination adequately addresses the concerns raised by comments. The revised final guideline recognizes the need for flexibility where feasibility and cost significantly affect the ability to meet the standards for new vehicles and new stations. For example, the Board recognizes that the majority of light rail systems may not operate on dedicated rights-of-way, or may operate partly on streets or pedestrian malls, and will, therefore, not be designed for level boarding. The exception in § 1192.73(d)(4) acknowledges that in many systems, high platforms are not operationally feasible. Such systems, therefore, are expected to provide access from low platforms with car-borne, platform-mounted, or portable lifts. Others may bridge the gap between the car floor and a set-back platform with a ramp or bridge plate and still others may provide mini-high platforms.

Nevertheless, level boarding from high platforms provides the most accessibility for the maximum number of people and is operationally superior to deploying lifts or bridge plates or aligning doors with small platforms. Therefore, for those systems or stations which can achieve such coordination, § 1192.73(d) defines an accessible interface which can be safely negotiated by wheelchair or mobility aid users. This general provision applies only to new vehicles in new stations, operating in a level-boarding mode. New vehicles may have a greater vertical variance, plus-or-minus 1½ inches, in existing stations because of possible variance in platform height in existing stations. Also, the gap requirements only apply to new stations and those designated as key stations, not to all existing ones. Since some existing key stations may have curved platforms and the horizontal gap will not be the same at all doors simultaneously, the horizontal gap requirements only apply to one door of accessible vehicles. Finally, the Board has allowed an even greater variance for existing cars retrofitted to meet the one-car-per-train rule, since it is neither feasible nor cost effective to reduce the horizontal and vertical gaps to the new-car standard. The Board does not consider the four-inch horizontal and plus-or-minus two-inch vertical allowance to be independently negotiable by many wheelchair and mobility aid users. However, as older cars are phased out of the system and replaced with new cars, the gap will decrease. In the meantime, reasonable accessibility will be achieved.

Section 1192.75 Priority Seating Signs

No comments were received on this section. As discussed under § 1192.25(b), the contrast formula has been deleted.

Section 1192.77 Interior Circulation, Handrails, Stanchions

As discussed under § 1192.29, dimensional requirements have been added for handrails. As further discussed under §§ 1192.23(a) and 1192.51(c), space must be provided for at least two wheelchairs or mobility aids.

Comment. Commenters generally agreed with the Board's position that securement devices should not be required on light rail vehicles. Tri-Met, which provides clamps and tiedown

systems but does not require their use, indicates that over a five-year period there has not been any incident reported involving unsecured mobility aids. The NPRM asked whether the Board should require a handrail or stanchion adjacent to the wheelchair or mobility aid space. Two transit agencies argued that it would be obstructive to users or inhibit maneuverability, especially if several spaces were provided in one car. One commenter expressed support for the provision of such a handrail or stanchion.

Response. As discussed under § 1192.57, the Board has included advisory information in the appendix on the provision of an adjacent handrail or stanchion.

Comment. The NPRM asked whether further specification was needed for maneuvering space and the placement of handrails and stanchions. One transit agency recommended the language concerning the location of spaces in an area that does not "prevent" the movement of other passengers be changed to "unduly restrict."

Response. The Board considers the suggested language to more adequately reflect its intent in specifying a location that need not be entirely out of the path of travel so long as passengers could still pass and embark or disembark. In some cases, passengers may have to negotiate around an occupied space the same way in which they often must negotiate around standees. The analogous provision in § 1192.57(b) has also been revised.

Section 1192.79 Floors, Steps and Thresholds

As discussed under § 1192.23(b)(6), the Board has not specified a value for slip resistance surfaces. As further discussed under § 1192.25, the contrast formula for step edges has been deleted.

Comment. The NPRM asked about the feasibility and costs of requiring first steps to have a 14 or 16 inch height; risers to have a 7, 8, or 9 inch height; and treads to have a 10 or 11 inch depth. Most commenters recommended a first step height of 14 inches, risers of 9 to 10½ inches, and treads of 10 inches. Some commenters pointed out that these measurements could not be easily achieved and would require an additional step and possibly cause the steps to encroach into the aisle, restricting maneuverability for wheelchair and mobility aid users.

Response. It is clear from these comments and those addressing the same question in regard to commuter and intercity rail vehicles that step measurements are considerably restricted by space limitations and basic vehicle design. Since standees are allowed to use lifts, the Board has chosen not to specify any step dimensions pending further study of the design constraints involved.

Section 1192.81 Lighting

Comment. Two transit providers argued that requiring outside lights to be located below window level was not necessary since vestibule lights or overhead doorway lights could meet the requirements for 1 foot-candle illumination for a distance of 3 feet beyond step, lift platform, ramp, or bridge plate edges. One commenter recommended that the 3 foot distance be measured perpendicular to the step edge.

Response. The specification for the location of lights below window level is currently required by DOT regulations at 49 CFR 609.19(f)(3). Section 1192.81(c) has been revised to require that the 3 foot distance of illumination is to be measured perpendicular to the bottom step tread.

Section 1192.83 Mobility Aid Accessibility

General

Comment. The ADA applies a specific formula to intercity trains in determining the required number of wheelchair or mobility aid spaces for each type of accessible car since not all cars of a train may be accessible to wheelchair or mobility aid users. The NPRM asked whether a similar formula should be developed for light rail systems with paired vehicles boarded from mini-high platforms or wayside lifts. Instead of such a formula, operators could provide a second mini-high platform or wayside lift. Another possible alternative, although operational in nature, would be stopping each car ("double-stopping") at one platform. A majority of commenters considered the provision of a second mini-high platform or wayside lift to be impractical and very expensive. Two other commenters said that double-stopping would not only cause delays but would not be feasible at certain urban intersections since, during the second stop, the first car would block cross-traffic. Almost all commenters favored a formula that would provide additional seating in the first car of the train. While considering this the most feasible option, one commenter felt that the effects on car design and seating capacity would have to be evaluated. One transit operator recommended 2 spaces for each train while another recommended 2 for each car so that a total of 4 would be required in the first car of a two car train. Another commenter recommended 2 spaces for each car but did not specify whether an additional 2 would be required as part of a formula. Another commenter recommended 1 space for every 25 feet of train in vehicle length.

Response. In recognition of the complications that may arise with paired vehicles boarded from mini-high platforms or wayside lifts, the Board originally considered the provision of additional spaces in one vehicle as an adequate and practical alternative. However, since all new vehicles are required to be accessible by the ADA, the provision of extra spaces in one car could not be made at the expense of the other, which would still be fully subject to the requirements. Operators preferring to accommodate wheelchair or mobility aid users in one car would still have to provide the minimum number of spaces in the second car, since the ADA says all new vehicles must be able to be entered and used. Based on the comments, the Board has decided to require that each car accommodate at least two wheelchair and mobility aid users. The Board does not have the authority to require a higher level of accessibility for vehicles based on a situation that is primarily operational in nature and thus has not proposed any formula. As long as all new vehicles are accessible, and each is compatible with the wayside lift or mini-high platforms, they would meet the requirements of the guidelines. If all passengers could be accommodated on the first car, the train would not need to double-stop.

Comment. One commenter noted that the exception in § 1192.83(a)(2) for car-borne devices should only apply if all stations are equipped with complying lifts, ramps, or bridge plates.

Response. Since all existing stations are not required to be accessible under the ADA, the Board does not think that it would be practical to qualify this exception based on all stations providing an accessible means of boarding. Under such a provision, incentive may be given to operators to provide lifts or ramps leading to vehicles even though the station or platform itself may remain inaccessible. However, the Board agrees that this provision should apply to all stations that are required to be accessible under the ADA and has added a reference to DOT's regulations. This exception has also been revised to include a reference to mini-high platforms. A statement has also been added noting that new vehicles added to trains need not be equipped with boarding devices so long as they are

compatible with those devices provided on platforms or at stops.

Vehicle Lift

The requirements for lifts on light rail vehicles have been revised to be consistent with the analogous provisions for lifts on buses which are discussed under § 1192.23(b).

Comment. Few comments were received regarding lifts for light rail vehicles. One commenter stated that a contrast strip around the platform perimeter was not needed and would obscure the location of entry and exit points. A transit operator commented that the 48 inch platform may be difficult to provide on some vehicles. Another operator stated that its vehicles were not wide enough to accommodate a 44 inch platform.

Response. For reasons discussed under § 1192.23(b)(12), the provision regarding a contrast strip around the perimeter of the platform has been deleted.

The 48 inch by 30 inch dimension for the lift platform is commonly used and has long been recognized as the absolute minimum space needed to accommodate wheelchair or mobility aid users. Transit operators concerned about providing lifts of this size on existing vehicles are reminded that retrofit is not required by these guidelines and that other alternatives may be available under the provisions for ramps, platform-mounted devices, mini-high platforms or equivalent facilitation.

Ramps or Bridge Plates

The requirements for ramps or bridge plates on light rail vehicles have been revised to be consistent with the analogous provisions for ramps on buses which are discussed under § 1192.23(c).

Comment. Two commenters recommended that handrails be required for bridge plates. Three commenters argued that handrails were not needed if assistance were available or if the bridge plate were less than 32 inches long.

Response. Since bridge plates typically span small gaps, the Board agrees that handrails are not necessary especially if they are to be light enough in weight to be easily used. However, if handrails are provided, they must meet the specifications of § 1192.83(c)(8).

Section 1192.85 Between-Car Barriers

Comment. One commenter expressed support for between car barriers. A transit operator advised that they were not needed for systems providing low-level boarding since the space between vehicles is not as likely to be confused with the entrances. One transit organization stated that the installation of barriers would be difficult to engineer and "may create vision problems for the vehicle operator under certain vehicle configurations."

Response. As proposed, § 1192.85 specifies that barriers are required only for vehicles operating "in a high-level platform, level-boarding mode." No changes have been made to the section.

The Board is unaware of any circumstances under which between-car barriers can impair the vehicle operator's field of vision, and no comments from transit operators shared this concern. This provision does not require barriers of any specific type and allows solutions, such as chains, that are widely considered feasible and simple. In view of the options allowed in meeting this requirement, the Board is confident that this provision will not cause significant engineering or design problems.

Section 1192.87 Public Information System

Comment. The NPRM asked whether light rail vehicles should be required to meet the same requirements for public information systems as rapid rail vehicles under § 1192.61. Six commenters favored such a requirement and two did not.

Response. The Board has included a requirement for light rail vehicles to meet the same requirements for public address systems as rapid rail vehicles. However, for the reasons discussed under § 1192.35, an external speaker is not required and, pending further study, specific provisions have not been included for persons with hearing loss. Since the useful life of light rail vehicles is relatively long and very few new ones are purchased each year, the Board believes that there is time to study this issue. Any potential requirements arising from the study can be incorporated when these guidelines are revised and updated. The Board further believes that this can be accomplished in time to minimize any impact on system accessibility which might result from a delay in requirements.

Comment. One comment recommended that a requirement for signage be added to subpart D similar to that for large buses.

Response. The Board agrees that accessible signage should be specified for light rail vehicles. However, the Board did not propose such a requirement in the NPRM. In order to ensure sufficient opportunity for comment on this provision, the Board has decided to only recommend signage in the appendix and to consider a requirement when the guidelines are updated. The appendix recommendation is taken directly from the requirement for buses in § 1192.39.

Subpart E—Commuter Rail Cars

Section 1192.91 General

Comment. One transit authority noted that the requirements of this subpart should be more performance-oriented and that certain specifications should be stated as "goals" instead of actual requirements. The commenter further argued that the requirements should be less stringent where operator assistance is available and recommended inclusion of a variance provision to address situations where certain requirements cannot be met.

Response. Under the ADA, the Board is responsible for developing minimum guidelines for accessible vehicles. The Board has sought to define the minimum criteria to ensure that vehicles can be entered into and used by persons with disabilities as required by the statute itself. Where possible and practical, the Board has based requirements on performance standards, such as those for interior circulation and between-car barriers, to afford transit operators and car designers as much flexibility and options as possible in providing the required level of accessibility. However, use of performance-based standards have been limited to only a few situations. Many designers and engineers have pointed out that it is critical that guidelines and standards clearly spell out that which is necessary for providing a minimum level of accessibility. Requirements based on performance specifications can lead to confusion or misinterpretation, and compliance is difficult to ascertain. Further, throughout its development of these guidelines, the Board has paid close attention to the feasibility and cost of each requirement. As discussed under specific sections, certain proposed specifications that have been shown by comments to be costly or infeasible have been modified or reserved.

In response to the concern for flexibility in cases where certain requirements cannot be met, a provision for equivalent facilitation has been added to the guidelines at § 1192.2. This provision gives operators more flexibility and options by allowing them to pursue alternative means or methods of providing the level of accessibility required by these guidelines.

Comment. One transit provider expressed a concern about possible conflicts with Federal Railroad Administration (FRA) regulations.

Response. The requirements of the ADA, as specified in the statute itself and made clear by its legislative history, are not intended to supersede or supplant the Federal Railroad Safety Act of 1970 (45 U.S.C. 421 et seq.) The Board has modified those provisions that it confirmed did conflict with FRA regulations, such as the requirements for handrails in stepwells (see § 1192.97). Further, the guidelines do not require the relocation of structural members such as collision posts.

Comment. Several commenters recommended that the guidelines address the one-car-per-train rule.

Response. As in the case of rapid and light rail vehicles, a paragraph has been added at § 1192.91(d) for existing vehicles that are retrofitted to meet the one-car-per-train rule. Such cars, if not level-entry, must be equipped with a boarding device complying with § 1192.95; be designated as accessible in accordance with § 1192.93(e); and where provided, have restrooms that are accessible in accordance with § 1192.107. At least one door must be coordinated with the boarding platform as required by § 1192.93(d), or its applicable exceptions. The Board understands that widening doors on existing commuter rail cars involves substantial and costly modification and the relocation of structural members. Further, such extensive retrofit may conflict with FRA regulations. Consequently, the Board is not requiring a 32 inch clear width for the doors of retrofitted cars. Existing cars that meet DOT regulations implementing section 504 of the Rehabilitation Act of 1973 may be used to satisfy the one-car-per-train rule.

Comment. Two transit agencies noted that mini-high platforms provide significant advantages not acknowledged by the Board. Two other commenters stated that level boarding is not required by the ADA and that there is no statutory basis for the Board's preference for level boarding.

Response. The Board believes that level boarding is the best means of providing accessibility and benefits all passengers. It can reduce station dwell times for passenger boarding, a concern often expressed by operators throughout their comments to these guidelines. Mini-high platforms can only accommodate a limited number of passengers and can restrict normal passenger flow. Further, with mini-high platforms vehicle entrances must be aligned with a smaller boarding area, and in some cases, double-stopping of the train may be required. Thus, from both an accessibility and operational perspective, the Board recommends level boarding. Nevertheless, where level boarding cannot be achieved, alternative methods are permitted, including mini-high platforms. The advantages of mini-high platforms were pointed out by comments basically in comparison with car-borne lifts. Mini-high platforms may offer certain advantages over car-borne lifts but not level boarding.

Section 1192.93 Doorways

Comment. Two commenters stated that the 32 inch width requirement should not apply to all doors opening onto platforms and doorways leading to passenger compartments but only to those leading to accessible seating locations because it is an unnecessary design constraint and may lead to the loss of seats.

Response. The Board proposed to require that all doors have a 32 inch clear width because it did not think such a requirement would have a severe impact on design and would benefit semi-ambulatory passengers. However, the Board understands that some cars are designed with vestibules at each end that can be quite narrow, in some cases only 31 inches wide. Only one vestibule is required to be accessible under the provision for passageways leading to passenger compartments. Providing 32 inch doors on both ends of cars would require that both vestibules be widened, which may result in a loss of seats. Further allowing standees to use lifts makes accessibility to other doors unnecessary. Consequently, § 1192.93(a) has been revised to require that only one entrance and one compartment doorway have doors with a 32 inch clear width.

Comment. Three transit operators and one transit organization opposed the 30 inch requirement for end doors. These comments stated that this requirement is inconsistent with the evacuation procedures instituted by some operators (e.g., some use evacuation windows or center doors in lieu of end doors). One of the transit operators indicated that widening doors on existing cars would be expensive and involve the relocation of collision posts. These comments also stated that some end doors may not be accessible due to aisle width or the presence of steps. A few considered this provision to be inconsistent with the legislative history of the ADA which indicates that passage between cars shall not be required.

Response. The Board has revised the provision proposed in the NPRM so that the final rule addresses the issues raised by commenters. First, the Board emphasizes that this provision pertains only to new cars. Existing or retrofitted cars are not subject to this requirement.

Second, the Board recognizes that not all cars have routes that are usable by mobility aid users leading to the end doors and that the ADA's legislative history indicates that only a route to accessible seating is required. Consequently, this provision has been modified so that it applies only to those cars that have a route which is 30 inches wide and not interrupted by steps between accessible seating locations or spaces and end doors. However, such a route is not itself required. For example, if the accessible entrance is in the center of the car and there is only a narrow aisle between passenger seats, the end door would not be required to be 30 inches wide. However, if a car is designed with an aisle at least 30 inches wide without steps leading to the end door, the end door would be required to be 30 inches.

Third, the Board points out that this provision should not interfere with a transit operator's evacuation procedures. The requirement pertains only to the width of doors and does not require operators to alter their evacuation procedures or to allow passage between cars. The Board has adopted this requirement because under certain evacuation procedures or circumstances, such as when the doors fail to close in one car, passage from one car into another may be necessary.

Comment. Intercity rail cars, which are sometimes used for commuter rail service, usually have a vestibule leading from the entrance to the passenger compartment doorway. Since this approach involves a right-angle turn, the Board proposed a 42 inch width for vestibules, which is the dimension required by existing accessibility standards for buildings and facilities. The NPRM asked about the feasibility of providing new cars with a vestibule of this width and a compartment doorway 32 inches in width. Two transit operators stated that providing a 42 inch wide vestibule would require redesign of the end of the car and possibly involve the loss of one row of seats. Another transit agency noted that widening vestibules at the end of new cars would require relocation of the collision posts and that widening center vestibules would involve the loss of an unspecified number of seats. Bombardier, a major rail car manufacturer, estimated a loss of 20 inches from the passenger compartment to widen the vestibules at both ends of a car. One transit authority stated widening vestibules on existing cars would not be feasible and a government agency stated that a

reduction in seating for wider vestibules was a poor trade-off. Two individuals with disabilities argued against any reduction in the space between seating rows because the current amount of space is already inadequate for visually impaired persons with service animals. None of the comments addressed the feasibility of providing a compartment door with 32 inches clear width except for one transit agency which noted that this width is currently provided on its cars.

Response. The Board wishes to make clear that the retrofit of existing vehicles is not required by these guidelines and that this requirement pertains only to new cars. Existing cars or cars retrofitted under the one-car-per-rule are not subject to this provision. With respect to new cars, Amtrak has indicated that it is ordering cars with 42 inch vestibules and that the incremental cost is negligible. These vestibules are to be achieved through proper placement of the bulkhead, not affecting collision posts. However, in view of the comments received, the Board has decided to limit this requirement to only one vestibule for each accessible car, where passage through such a vestibule is required to reach accessible seating locations from an accessible entrance.

In ensuring that new cars can be entered and used by disabled persons, the Board feels that a width of 42 inches is essential. Common accessibility standards for buildings and facilities require a width of 42 inches in order to accommodate the maneuvering space needed for right-angle turns through doors. See UFAS and ANSI A117.1 (1986), § 4.13.6, Figures 25 (e) and (f).

Comment. The NPRM asked whether there were any special problems or costs involved in providing audible and visual door closing signals on commuter rail cars. Two transit agencies considered this an expensive requirement in terms of retrofitting existing cars. They also questioned the usefulness of such signals for doors equipped with sensitive edges or where conductors or attendants visually confirm that the doors are clear before closing them. Several individuals with disabilities expressed support for signals. The only cost information provided pertained to the retrofit of existing cars. A rail car manufacturer stated that signals for automatic doors are feasible and involve only a "modest cost increase."

Response. The requirement for audible and visual signals applies only to doors that "close automatically or from a remote location." Where doors are closed manually, signals are not required. None of the comments indicated that it was difficult or expensive to equip new or remanufactured cars with signals. Consequently, the requirement for audible and visual signals has been retained.

Comment. The 15 lbf maximum door closing force was strongly opposed by some transit operators who argued that it was too low under various exterior conditions, such as ice and snow, or in discouraging passengers from preventing door closure. Others argued that the requirement was not necessary where crews spot check doorways or where doors are equipped with sensitive edges. There were no comments in support of the requirement as it applies to commuter rail cars.

Response. As discussed under § 1192.53, the door closing force and speed requirements have been deleted from the final guidelines.

Comment. In regard to the coordination of doorways with the boarding platform, two transit operators stated that the 3 inch horizontal gap could not be achieved where commuter and freight lines operate on the same track. One stated that this requirement conflicts with state clearance requirements while another recommended that only state and local clearances should be required to be met. Two other commenters stated that the 3 inch gap could not be achieved at stations with curved platforms. A transportation engineering firm recommended a 4 inch horizontal gap for commuter and intercity rail. It was also argued that the ⅝ inch vertical tolerance could not be maintained due to wheel wear. One commenter stated that factors such as compressed suspension, fully loaded conditions, and wear of wheels when taken together could amount to a 4 inch vertical difference. Several transit operators pointed out that the exception for platform setbacks does not fully take into account the clearances required for freight operations. Two other transit authorities supported the use of bridge plates but conceded that flexibility was still necessary where freight lines operate. One commenter argued that the use of ramps or bridge plates would be labor intensive and increase headway.

Response. The Board believes the series of exceptions to the general provision for platform and vehicle floor coordination has adequately addressed the concerns raised by comments. The revised final guideline recognizes the need for flexibility where feasibility and cost significantly effect the ability to meet the standards for new vehicles and new stations. For example, the Board recognizes that the vast majority of commuter rail systems will be unable to meet the requirements for level boarding. The exception in § 1192.93(d)(3) acknowledges that in many, if not most systems, commuter rail cars share track with freight lines and high platforms are not operationally feasible. Therefore, it is anticipated that most systems will provide access from low platforms with car-borne, platform-mounted, or portable lifts. Others may bridge the gap between the car floor and a set-back platform with a ramp or bridge plate and still others may provide mini-high platforms.

Nevertheless, level boarding from high platforms provides the most accessibility for the maximum number of people and is operationally superior to deploying lifts or bridge plates or aligning doors with small platforms. Therefore, for those systems or stations which can achieve such coordination, § 1192.93(d) defines an accessible interface which can be safely negotiated by wheelchair or mobility aid users. This general provision applies only to new vehicles, in new stations, operating in a level-boarding mode. New vehicles may have a greater vertical variance, plus-or-minus 1½ inches, in existing stations because of possible variance in platform height in existing stations. Also, the gap requirements only apply to new stations and those designated as key stations, not to all existing stations. Since some existing key stations may have curved platforms and the horizontal gap will not be the same at all doors simultaneously, the horizontal gap requirements only apply to one door of accessible vehicles. Finally, the Board has allowed an even greater variance for existing cars retrofitted to meet the one-car-per-train rule, since it is neither feasible nor cost effective to reduce the horizontal and vertical gaps to the new-car standard. The Board does not consider the four-inch horizontal and plus-or-minus two-inch vertical allowance to be independently negotiable by many wheelchair and mobility aid users. However, such cars will eventually be phased out of the system. In the meantime, reasonable accessibility will be achieved.

Comment. One commenter supported the signage provision. One transit agency opposed the removal of signage when all cars are accessible. Another commenter asked whether existing accessible cars that do not meet all of the requirements could remain designated as accessible. Two commenters requested guidance on the type of signage that is necessary to indicate that accessible restrooms are available on a car.

Response. As discussed under § 1192.53(b), the Board has decided not to require the removal of signage when all cars are accessible. Since existing accessible cars may be used to satisfy the one-car-per-train rule, the Board is not requiring the removal of signage from existing cars that do not fully comply with this subpart. Further, retrofitted cars are required to be designated as accessible.

Since restrooms are not required or provided on all cars, the guidelines require that signage be provided indicating which accessible cars contain restrooms. Currently, there is no symbol or standard sign indicating the availability of accessible restrooms. Transit operators may provide such information with written signs (i.e., "Accessible Restroom Available") and symbols of their choice. The signage must be located at the entrance passengers should use to reach the accessible restroom.

Section 1192.95 Mobility Aid Accessibility

General

Comment. The NPRM asked whether a formula should be provided to determine the number of spaces for wheelchair and other mobility aid users on commuter rail trains. Two commenters stated that the number of spaces should be determined by local needs instead of a formula, at least where more than two spaces are required. Two transit operators preferred providing additional spaces instead of a second mini-high platform. The Southern California Regional Rail Authority, which operates a mini-platform system, noted that it currently is specifying four spaces on each cab type car (two with securement devices and two without) and two wheelchair storage spaces, and two spaces for trailer type cars.

Response. As discussed under § 1192.83(a), the Board originally considered the provision of additional spaces in one vehicle as an adequate and practical alternative to the construction of additional mini-high platforms or the double-stopping of trains. However, the ADA requires all new commuter rail cars to be accessible. The minimum number of spaces must be provided in each as subject to the guidelines even when additional locations are provided on one car. A formula has not been specified since this would require a higher degree of accessibility for certain cars based on a situation that is primarily operational in nature. Based on the comments discussed under § 1192.23(a), the Board has decided to require each car to have at least two spaces for wheelchairs and mobility aid users.

Comment. One commenter suggested that the exception in § 1192.95(a)(2) should include a clarifying statement that cars serving both high and low level platforms be considered as level-entry so that it is clear that operators do not have to make all low level platforms accessible.

Response. The question of which stops or stations are required to be accessible will be addressed by DOT's regulations, not these guidelines.

Vehicle Lifts

The requirement for lifts on commuter rail vehicles have been revised to be consistent with the analogous, applicable provisions for lifts on buses which are discussed under § 1192.23(b).

Comment. Recognizing that platform-mounted or portable lifts could not be interlocked with the train brake or propulsion systems, the NPRM asked whether there were any systems that would prevent a train from moving while the lift was in use. One transit system noted that it is specifying interlocks for its new cars but that it opposes such a requirement in the guidelines since crew members confirm that the doorways are clear. A manufacturer indicated that it would be difficult to provide power-interrupting devices on trains with a push-pull trainline capability and that installing lifts on cars, where feasible, will have a "major impact" on car design, including the possible loss of 6 to 8 seats. Two commenters noted that a manual override was necessary in order to respond to emergencies or malfunctions.

Two transit agencies noted their intention to use power interlocks to prevent train movement while the doors are open; however, this system is to be used with boarding ramps instead of lifts. Another commenter recommended that an advisory panel be developed to address the issue of interlocks and how they can be provided. One commenter recommended that lifts should be allowed on platforms only where they cannot be installed on cars.

Response. The Board recognizes that some transit systems have well-established procedures, including inspection by train crew, to ensure that trains do not move before boarding is complete. However, operational methods cannot be incorporated into these guidelines. In view of the complications concerning the installation of lifts on commuter rail cars, the Board considers the provision of some type of safety mechanism for portable or platform-mounted lifts to be of even greater importance. The exception for platform-mounted or portable lifts allows use of a "mechanical, electrical, or other system" in lieu of an interlock system, to ensure that the train does not move while the lift is in use. Under this exception, devices may be installed that do not function as an interlock but, at a minimum, as a warning that a lift is in use or that a door is open. The Board considers some mechanical or electrical device must be provided in addition to any existing operational methods, such as spot inspection by crew members, to limit the possibility of human error. This provision has been written as a performance requirement to afford transit operators and manufacturers as much flexibility as possible in providing such a system. If this requirement could not be met, operators could develop and propose alternative methods to meet this requirement under the procedures for equivalent facilitation.

Regarding manual override features, such mechanisms are allowed as long as they comply with the requirements for emergency operation.

Comment. The NPRM asked whether lifts with larger platforms could be provided on commuter and intercity rail cars. Due to design constraints, Bombardier stated that it would be difficult to provide a lift with a platform larger than 30 inches. A major lift manufacturer noted that it can provide lifts for vehicles with a platform length of 50 inches. A transit organization stated that a larger platform length should not be specified for commuter rail due to station and vehicle configurations.

Response. The Board raised the question of requiring a larger lift platform for commuter and intercity rail since the ADA does not require the provision of supplementary paratransit for these modes of transportation. Based on these comments and those received in regard to buses, the Board has decided to retain the proposed 48 inch by 30 inch platform size for all vehicle types.

Ramps and Bridge Plates

The requirements for ramps or bridge plates on commuter rail cars have been revised to be consistent with the analogous, applicable provisions for ramps on buses which are discussed under § 1192.23(c).

Comment. One commenter stated that platform-based ramps or bridge plates should not be required to be "firmly" attached to vehicles.

Response. This provision has been modified as suggested but ramps or

bridge plates must be deployed or attached in a manner that prevents movement or displacement when in use.

Comment. In response to a question in the NPRM, several commenters opposed handrails on ramps and bridge plates.

Response. Handrails are not required on ramps or bridge plates.

Seating Location

Comment. All the commenters agreed that securement devices should not be required for commuter rail cars.

Response. As discussed under § 1192.23(d), securement devices are not required for any type of rail cars.

Section 1192.97 Interior Circulation, Handrails, and Stanchions

Comment. Two commenters noted that the 1¼ to 1½ inch diameter specified for handrails and stanchions conflicts with FRA regulations.

Response. The FRA regulations (49 CFR part 231) allow a minimum diameter of ⅝ inches for handrails at the entrances or stairways of cars since such handrails are required to be solid. Section 1192.97 has been revised so that the diameter specifications apply to interior handrails and stanchions and entrance handrails are required only to the extent allowed by FRA regulations.

Section 1192.99 Floors, Steps, and Thresholds

As discussed under § 1192.23(b)(6), the Board has not specified a value for slip resistance. As further discussed under § 1192.25, the contrast formula for step edges has been deleted.

Comment. The NPRM asked about the cost and feasibility of requiring first steps to have a 14 or 16 inch height; risers to have a 7, 8 or 9 inch height; treads to have a 10 or 11 inch depth. Most commenters pointed out that these measurements would pose significant design challenges. One transit agency design tested these measurements and found, at least with some of the measurements, that the vestibule would be dramatically reduced. A few recommendations were made, most of which centered around 17 inches for the first step; 8½ to 11½ inches for riser height; and 8 to 10 inches for tread depth.

Response. It is clear from the comments that providing steps according to any of the proposed measurements is not easily achievable. Since standees are allowed to use lifts, the Board has decided not to specify any step dimensions pending further study of the design constraints involved.

Section 1192.101 Lighting

Comment. Several commenters opposed the requirement that outside lights be located below window level.

Response. The Board agrees that lights do not have to be located below window level on commuter and intercity cars so long as the required level of illumination is provided. This requirement has been removed from the lighting provisions for commuter and intercity cars but not light rail vehicles, which are required by existing DOT regulations to have lights mounted below window level. Lights are only required at unlighted stations so that most systems will not need them.

Section 1192.103 Public Information Systems

As discussed under § 1192.35 specified provisions have not been included for persons with hearing loss, pending further study.

Comment. Two consumers recommended that commuter rail cars should be equipped with external address systems.

Response. As discussed under § 1192.35 and § 1192.87, the Board has not required external speakers on vehicles other than rapid rail cars pending further study.

Section 1192.105 Priority Seating Signs

Three comments were received on this section and they were generally supportive. As discussed under § 1192.25(b), the contrast formula has been deleted.

Section 1192.107 Restrooms

Comment. One transit agency stated that restrooms accessible under earlier standards should be considered accessible for purposes of the one-car-per-train rule.

Response. As discussed under § 1192.91(d), existing vehicles designed or manufactured according to earlier standards that are retrofitted to meet the one-car-per-train rule are not required to have accessible restrooms.

Comment. One commenter recommended that swing or power-activated sliding doors should be required instead of sliding doors, which can be difficult to use. Another commenter stated that the doors should have a clear opening of 40 inches.

Response. Doors that swing in would restrict maneuverability within the restroom, and those that swing out into the aisle pose a safety hazard. At this time the Board does not have enough information on the availability of power sliding doors. Likewise, it is not clear whether a 40 inch door can be provided. The Board feels that further study and review of possible design options in providing wider doors or power doors, including technical feasibility and cost, is necessary before adopting requirements for such doors.

Comment. The specifications for maneuvering space and door width are based on a basic Amtrak design. Restrooms of this type are usually located at the ends of cars with a regular restroom across from it. These requirements provide for the absolute minimum in maneuvering space and many mobility aid users will not be able to use such restrooms very easily. The NPRM asked whether other restroom configurations were possible that would allow more maneuvering space. Several commenters stated that the end of a car was the most practical and feasible location. Locating restrooms elsewhere, such as in the center of cars, would interfere with the aisle or require it to be widened. One commenter recommended that the restroom be located across from seats instead of another restroom and be on a 36 inch aisle. However, a car manufacturer noted that pairing restrooms at the ends of cars minimizes costs and optimizes the arrangement of sewage and HVAC equipment. One transit authority noted that the width of restrooms could be widened to 37 inches but that the 60 inch length was the most that could be provided without losing seats. Another commenter stated that the specified dimensions were inadequate for power wheelchair users and recommend dimensions of 58 inches by 60 inches.

Response. The Board has decided to retain the restroom dimensions in § 1192.107 which have been in existence since 1978. The Board plans to further study the feasibility and costs of providing larger restrooms.

Section 1192.109 Between-Car Barriers

Since some commuter rail systems may operate in a manner similar to rapid rail systems, the Board has decided to add a requirement for between-car barriers. This requirement applies only to level-entry commuter rail vehicles operated at high-level platforms, which are not very common. Vehicles that have bellows between cars, like some intercity cars, are not subject to this requirement.

Subpart F—Intercity Rail

Section 1192.111 General

Comment. Amtrak recommended that existing accessible cars should be specifically exempted from the guidelines, particularly the requirements

for vestibules and doorways leading to passenger compartments.

Response. A paragraph has been added to § 1192.111(e) that outlines the requirements for existing cars that are retrofitted to meet the seating requirements of the DOT regulations. Such cars must be designated as accessible in accordance with § 1192.113(e); have accessible restrooms, where provided, complying with § 1192.123; and, if not a level entry car, be equipped with a boarding device as required by § 1192.125(a). Existing cars designed and manufactured to be accessible with DOT regulations implementing section 504 of the Rehabilitation Act of 1973 are also required to comply with § 1192.125(a) but are not subject to the requirements for vestibules or passenger compartment doorways. Also, restrooms designed to be accessible in accordance with DOT section 504 regulations need not be modified.

Comment. One commenter stated that the requirement for accessible restrooms in food service cars is unreasonable since these cars normally are not equipped with restrooms.

Response. Accessible restrooms are required only where restrooms are provided for the general public.

Section 1192.113 Doorways

The exception in § 1192.113(d) for the horizontal and vertical gaps has been revised to be consistent with the analogous provisions for other types of rail systems as discussed under § 1192.23(c).

Comment. Amtrak indicated that 42 inch wide vestibules and 32 inch compartment doors have been incorporated into its specifications for new cars and that the incremental cost increase is negligible. However, for existing cars these requirements would possibly cause the loss of 4 seats, require relocation of restrooms and vestibule partitions, and replacement of interior door panels and operating mechanisms. A manufacturer stated that these requirements could force expensive structural changes on existing car types, increase the size of door pockets, and cause the loss of seats. Two other commenters specifically estimated a loss of 1 row of seats.

Response. In view of the concerns raised about the costs of widening vestibules on existing cars, the Board stresses that this requirement pertains only to new cars. Existing cars, including those designated as accessible under DOT section 504 regulations, do not have to be retrofitted to meet this requirement. Further, this requirement applies only to those types of intercity rail cars that are required by the ADA to be accessible to wheelchair and mobility aid users from the platform. Information from Amtrak indicates that 42 inch vestibules are feasible on new cars and that the cost is negligible. The Board has decided to retain this provision but has modified it so that only one vestibule may be required to be 42 inches wide. Also, because the ADA only requires a number of seating locations based on the number of coach cars per train, and two of each type are permitted on a car, ultimately about 50% of all new cars will need to be accessible to wheelchair and mobility aid users.

The Board considers the 42 inch width to be the absolute minimum width necessary for wheelchair or mobility aid users to negotiate right-angle turns through doorways. This maneuvering dimension is required by existing standards for buildings and facilities such as UFAS and ANSI (1986). A width less than 42 inches will not ensure that passenger compartments can be entered and used by mobility aid users as required by the ADA.

Comment. The NPRM asked whether end doors of 32 inches could be provided on new cars and, if so, at what additional cost. Amtrak indicated that the 30 inch width has been specified for new cars and that the feasibility of a 32 inch width is under investigation. To widen the end doors of existing cars to 32 inches would, according to Amtrak, require relocation of collision posts. Two transit operators stated that a 32 inch passageway is achievable but, in regard to existing cars, cost-prohibitive. One manufacturer noted that Bi-level Superliner cars are currently provided with doors 30½ inches wide and that, since access to the upper level is impossible, a 32 inch door width should not be required.

Response. The Board proposed a 32 inch width for end doors to ensure access between single-level coaches and dining cars and food service cars not only for wheelchair users but also for semi-ambulatory passengers. This would not apply to existing cars but to new or remanufactured cars, including bi-level cars. Although the ADA does not require bi-level cars to be accessible to wheelchair users, the statute does require all new cars to be accessible to persons with disabilities, other than wheelchair and mobility aid users. Since wider end doors could affect the structural integrity of new cars covered by the Federal Railroad Safety Act of 1970, the Board has modified this provision so that a 32 inch width is required "to the maximum extent practicable" under that Act.

Comment. Amtrak agreed with a 1 foot per second door closing speed but considered a maximum force of 15 lbf insufficient to ensure full closure of exterior doors. Although a maximum closing speed and force were not proposed for interior doors, Amtrak recommended a 1 foot per second speed and 20 lbf force for such doors and noted that swing doors are not addressed by the guidelines.

Response. As discussed under § 1192.53, the Board has removed the proposed force and closing speed for exterior door closing pending further study. The Board did not intend to address, and thus did not propose, requirements for interior doors and plans to await the results of future studies before doing so. The Board did not propose requirements for swing doors because while they are provided on some cars, they are typically not placed on passenger routes.

Section 1192.115 Interior Circulation, Handrails, and Stanchions

Comment. Amtrak noted that the dimensional requirements for handrails are inconsistent with FRA regulations for handrails at entrances and stairways. Amtrak also indicated that it was not possible to provide such handrails without restricting the 32 inch clear width for doors.

Response. To be consistent with FRA regulations, this section has been revised so that the dimensional requirements apply only to interior handrails and stanchions, where provided. Handrails and stanchions at entrances are to be provided as specified only to the extent allowable under FRA regulations.

Comment. Amtrak stated that the NPRM requirements for interior circulation, were sufficient. A disability organization recommended a 36 inch route and moveable arm rests for seats.

Response. A 36 inch route cannot easily be provided and would require a reduction in the width of restrooms. Further, the Board does not have any information on the impact on costs or seating of such a route and considers the 32 inch width to be a sufficient minimum width. In regard to moveable armrests, the Board did not propose any requirements for transfer seats and, therefore, did not provide an opportunity for the public to comment on the cost and feasibility of movable armrests. The Board will consider any additional requirements when it revises and updates the guidelines.

Section 1192.117 Floors, Steps, and Thresholds

As discussed under § 1192.23(b)(6), the Board has not specified a coefficient of friction for slip resistance but has retained the general performance requirement. As further discussed under § 1192.25, the contrast formula for step edges has been deleted.

Comment. The NPRM asked about the feasibility and costs of requiring the first step on intercity rail cars to have a 14 or 16 inch height; risers to have a 7, 8, or 9 inch height; and treads to have a 10 or 11 inch depth. A manufacturer and two transit agencies suggested that risers of 9 inches and treads of 10 inches might be feasible for new cars, but that the first step, according to the manufacturer, should be no lower than 19 inches. Amtrak recommended a first step height of 19 inches and uniform riser and tread dimensions between 8 to 10 inches and advised that spiral stairs on existing cars should be exempt. Also, Amtrak and two transit agencies supported the use of auxiliary steps.

Response. Although the comments indicate that some of the suggested measurements are feasible, the Board has decided not to specify step dimensions at this time for any type of vehicles.

Section 1192.119 Lighting

Comment. One manufacturer questioned whether the 1 footcandle illumination could be achieved 3 feet beyond the outer edge of lifts on single-level cars.

Response. The provision has been revised so that the distance is measured perpendicular to the bottom of the step tread and applies only at unlighted stations. The specified location below window level has also been deleted.

Section 1192.121 Public Information Systems

Comment. The NPRM asked whether assistive listening systems were feasible on intercity rail cars. Amtrak noted that all trains are equipped with public address systems and that while it plans to provide an "interdisciplinary approach using audio-visual technologies" it currently does not have sufficient information on assistive listening devices.

Response. The Board has reserved provisions for persons with hearing loss pending further study.

Section 1192.123 Restrooms

Comment. The NPRM asked about the feasibility of providing accessible restrooms with larger dimensions than those proposed. Amtrak indicated that widening the accessible restroom would require relocation of the adjacent restroom at a loss of 4 coach seats and the addition of a second water retention system. A new design configuration is currently being developed by Amtrak which, if implemented, may involve the loss of 4 to 6 seats. Amtrak recommended a performance-based standard instead of specific dimensions. Two transit agencies noted that a location other than the one adjacent to entrances was not feasible. One commenter noted that restrooms should be at least 58 by 60 inches so that power wheelchairs could be accommodated. Another noted that Fig. 4 may give the impression that two restrooms are required.

Response. The requirements for restrooms, including size dimensions, are the same as those that have been specified by Amtrak since 1978. The Board has decided not to adopt any additional requirements or increase the specified dimensions until further study on the cost and feasibility of providing larger accessible restrooms is completed.

Comment. One commenter recommended that accessible restroom doors provide at least 40 inches clear width. Amtrak pointed out that currently accessible restrooms doors are 37 inches wide, not 39 inches as proposed in the NPRM. Another commenter noted that sliding pocket doors may be difficult to use and recommended that power-activated sliding doors or swing doors be specified.

Response. The Board has decided to retain the 39 inch width for doors since it applies to new, not existing cars. Doors that swing in would restrict maneuverability within the restroom, and those that swing out into the aisle pose a safety hazard. At this time, the Board does not have enough information on the availability of power sliding doors. Likewise, it is not clear whether a 40 inch door can be provided.

Section 1192.125 Mobility Aid Accessibility

Lifts

Comment. Amtrak generally supported the proposed requirements for car lifts, including use by standees. Amtrak recommended that a platform rise should not be specified since it is dependent upon the thickness of the platform and that a contrast band should not be required around platforms since assistance is provided.

Response. The requirements for car lifts on intercity rail cars have been revised to be consistent with the applicable analogous provisions on buses which are discussed under § 1192.23(b).

Comment. The NPRM requested information on interlock devices for platform-mounted or portable lifts and whether larger lifts could be provided on intercity cars. Amtrak noted that it was still investigating the issues raised by these questions.

Response. With respect to alternatives to interlock systems, the FRA has indicated to the Board that intercity cars currently do not have the wiring capability necessary for a mechanical or electrical system that could indicate to the engineer whether a car door was open. However, some cars are equipped with light indicators at doors which would suffice as a supplementary warning device.

Ramps or Bridge Plates

Comment. Amtrak recommended that handrails should not be required on ramps under 78 inches long when fully extended or on bridge plates under 36 inches long. Amtrak also indicated that the proposed slopes and rises will make portable ramps too heavy and bulky and that ramps are restricted by platform space. Amtrak also noted that its Superliner cars currently have ramps that are 6 feet long with a 17½ inch rise and weigh 54 lbs.

Response. The requirements for car ramps or bridge plates for intercity rail cars have been revised to be consistent with the applicable, analogous provisions for ramps on buses which are discussed under § 1192.23(c). In response to Amtrak's specific handrails are not required on ramps or bridge plates. Varying slope requirements are permitted depending upon the distance between the vehicle floor and the station platform.

Securement Devices

Comment. Amtrak agreed that securement systems should not be required.

Response. No changes were made to this provision.

Section 1192.127 Sleeping Compartments

Comment. The NPRM asked whether additional requirements should be specified for sleeping compartments. One commenter stated that a turn-around space was not needed in the restroom if provided in the sleeping area. Another suggested that the compartment be large enough to accommodate a hoyer lift. Two commenters recommended that actual dimensions be specified, and one recommended a 32 inch by 48 inch space

beside the bed; a 30 inch by 42 inch space in front of the restroom; and closets complying with § 4.25 of UFAS. Another commenter stated that the requirements for sleeping compartments should be based on requirements for transient lodging in the buildings and facilities guidelines.

The NPRM also requested information on accommodations for persons with a hearing loss and whether such features should be incorporated into the accessible compartment or into another compartment. Amtrak stated that it lacks sufficient information on the necessary technology and plans to study the needs of passengers with hearing loss in fiscal year 1992. Four commenters recommended portable visual alarms. An organization representing persons with a hearing loss recommended that such devices be provided in a separate compartment. A manufacturer stated that accommodations for persons with a hearing loss should be incorporated into the accessible compartment.

Response. The Board has clarified this section to ensure that wheelchair and other mobility aid users can maneuver within the compartment and use all available amenities. A turning circle is not required in the restroom. Since these guidelines do not address portable equipment or devices, the provision of portable visual alarms has not been required. Devices and accommodations of this nature are "auxiliary aids" covered by the DOT regulations.

Comment. Amtrak requested that its enclosed phone booths be exempt from the requirements since making them accessible would involve the loss of 6 seats.

Response. Phone booths are not addressed by these guidelines.

Comment. One commenter recommended that signage requirements for buses should also apply to intercity rail cars and that restrooms and sleeping and dining rooms should provide signage complying with the building and facilities guidelines.

Response. The signage requirements for buses pertain to priority seating signs and destination and route signs. Priority seating signs have been required only on those types of vehicles where passengers may be required to stand when all seats are full which is generally not the case with intercity rail. Also, destination and route signs are usually not provided on intercity cars. Signage for restrooms and sleeping and dining rooms will be considered when the Board revises and updates the guidelines.

Subpart G—Over-the-Road Buses and Systems

Section 1192.151 General

The final DOT regulations require that over-the-road buses acquired by public entities (or a contractor to a public entity under certain circumstances) must also provide a level change mechanism or boarding device for wheelchair and other mobility aid users. See 49 CFR 37.7(c). This requirement has been referenced in § 1192.151(b).

Section 1192.153 Doors, Steps and Thresholds

As discussed under § 1192.23(b), the Board has not specified a value for slip resistance. As further discussed under § 1192.25, the contrast formula for step edges has been deleted from the guidelines and added to the appendix as advisory material, and the door closing force has also been deleted.

Comment. The NPRM asked about the feasibility of requiring the first step on over-the-road buses to have a 14 inch height; risers to have a 7, 8, or 9 inch height; and treads to have a 10 or 11 inch depth. Two commenters stated that the suggested requirements cannot be met without major structural changes because the driver's floor is elevated to a greater height due to baggage compartment requirements and spare tire storage directly below the driver's position. If the driver's floor were lowered, it would also require providing an extra step for passengers. Two other commenters noted that a retractable step is available for over-the-road buses which decreases the height of the first step to 8 inches.

Response. The Board has decided to await the results of the Office of Technology Assessment study on over-the-road buses before further considering any requirements regarding steps.

Comment. The ABA stated that the 32 inch clear width requirement for doors could not be met without major structural changes to the vehicle forward section, suspension, and running gear components, and recommended a minimum clear width of 30 inches if a width of 27 inches is allowed when structural members preclude the wider door.

Response. The Board agrees with ABA's recommendation and has revised § 1192.153(c) accordingly.

Section 1192.155 Interior Circulation, Handrails and Stanchions

Since over-the-road buses are sometimes used by public entities for fixed route service, an additional requirement has been added to this section for handrails where onboard fare collection systems are used.

Section 1192.157 Lighting

Comment. The ABA stated that the lighting requirements are already met on over-the-road buses and recommended that the section be revised to require outside lights only when the door is open.

Response. The section has been revised as recommended.

Subpart H—Other Vehicles and Systems

Section 1192.171 General

Comment. The NPRM asked whether other types of vehicles or conveyances should be included under this subpart. Several commenters recommended trams and one commenter recommended hydroplane and hydrofoil crafts.

Response. A new section 1192.179 has been added for trams which requires those vehicles to meet the same requirements as buses and vans with respect to mobility aid accessibility; doors, steps and thresholds; and interior circulation, handrails and stanchions. Hydroplanes and hydrofoils are generally used as ferries which are covered by § 1192.177 which is reserved. A requirement has been added to § 1192.171 which states that the provisions for vehicles or systems not addressed by the guidelines will be determined by DOT in consultation with the Board on a case-by-case basis. Such systems might include the Johnstown or Mongahela inclines, skyways and cable drive aerial tramways.

Section 1192.173 Automated Guideway Transit Vehicles and Systems

Comment. Three commenters indicated that some types of automated guideway transit (AGT) vehicles should be considered as light or rapid rail vehicles. One of these commenters noted that the term "automated guideway transit" pertains to the method of train control and thus could apply to certain rapid and light rail vehicles which should not be subject to the clearance requirements for AGT systems.

Response. The Board recognizes that some rapid and light rail systems can be regarded as AGT systems. Section 1192.173(a) is intended to address "people mover" or similar systems that are characterized by small, lightweight vehicles that move at relatively slow speeds and provide level boarding. The Board has clarified the definition so that paragraph (a) applies to slow-moving systems. An additional provision,

§ 1192.173(d) has been added which states that rapid and light rail AGT vehicles are subject to subparts C and D, respectively.

Comment. One transportation engineering firm considered it unreasonable to apply reduced horizontal and vertical tolerances for AGT systems since some vehicles have steel wheels and operate on steel rails. The firm indicated that it specifies a 2 inch horizontal gap and a ⅞ inch vertical tolerance, which rubber-tired vehicles can meet but steel-wheeled vehicles cannot. The firm also stated that small AGT systems are not generally equipped with automatic leveling devices, which are necessary to provide a ½ inch vertical tolerance. One transit operator felt that the gap tolerances should be the same as those specified for rapid rail.

Response. Those AGT vehicles that operate like rapid rail are subject to the greater tolerances specified for rapid rail, not those specified for the people-mover AGT systems. The Board proposed the 1 inch horizontal and ½ inch vertical tolerances based on an UMTA-sponsored survey of people-mover systems. See "Los Angeles Downtown People Mover: Handbook on Accessibility for the Elderly and Handicapped," UMTA, 1980. According to this survey, which included vehicles with rubber tires and those with steel wheels, these tolerances were found to be feasible. Also, the new provision on dimensional tolerances should adequately address the issues. As noted above, the Board has made clear that these requirements pertain to slow moving systems, which do not require as much clearance as do rapid rail type vehicles. Operators of systems that could not meet these specifications could pursue other alternatives under the provision for equivalent facilitation.

Comment. One commenter asked whether priority seating was required on AGT vehicles that do not provide any seating at all.

Response. The priority seating requirement for rapid rail vehicles, which this section references, does not require the provision of seats, but only signage to designate seats as priority seating. Consequently, such signage is not required where no seating is provided.

Section 1192.175 High-Speed Rail Cars, Monorails and Systems

No comments on this section were received and it has not been changed.

Section 1192.177 Ferries, Excursion Boats and Other Vessels

DOT has reserved the section in its final regulations concerning ferries and other vessels pending further study and consultation with the U.S. Coast Guard. The Board has also decided to reserve § 1192.177 and plans to coordinate the development of guidelines for ferries, excursion boats and other vessels with DOT and the U.S. Coast Guard.

Regulatory Process Matters

These guidelines are issued to assist DOT to establish accessibility standards for transportation vehicles required to be accessible by the ADA. DOT has incorporated these guidelines in its final regulation as the standards for accessible vehicles which are published elsewhere in this issue of the **Federal Register.** The guidelines, when considered together with the DOT regulations, meet the criteria for a major rule under Executive Order 12291 and have been reviewed by the Office of Management and Budget.

The Board has prepared a Regulatory Impact Analysis (RIA) which is available for public inspection at the Board's office. The RIA includes a comparison of the Board's guidelines with existing voluntary guidelines and industry practice; a qualitative and quantitative discussion of the benefits of accessibility; a cost impact analysis for certain accessibility elements; and a discussion of the regulatory alternatives considered. DOT has also prepared a final RIA of its regulations which incorporates data from the Board's RIA.

The Board's RIA also contains information that would be included in a final regulatory flexibility analysis under the Regulatory Flexibility Act.

DOT has included a discussion of the Federalism impacts of the transportation accessibility requirements of the ADA in its RIA.

The guidelines are effective on publication in the **Federal Register** so that they can be incorporated in DOT's final regulations. DOT's final regulations will establish the effective date for the accessibility standards.

List of Subjects in 36 CFR Part 1192

Buses, Civil rights, Handicapped, Individuals with disabilities, Mass transportation, Railroads, Transportation.

Authorized by vote of the Board on July 3, 1991, and August 26, 1991.

William H. McCabe,

Chairman, Architectural and Transportation Barriers Compliance Board.

For the reasons set forth in the preamble, the Board adds part 1192 to title 36 of the Code of Federal Regulations to read as follows:

PART 1192—AMERICANS WITH DISABILITIES ACT (ADA) ACCESSIBILITY GUIDELINES FOR TRANSPORTATION VEHICLES

Subpart A—General

Sec.
1192.1 Purpose.
1192.2 Equivalent facilitation.
1192.3 Definitions.
1192.4 Miscellaneous instructions.

Subpart B—Buses, Vans and Systems

1192.21 General.
1192.23 Mobility aid accessibility.
1192.25 Doors, steps and thresholds.
1192.27 Priority seating signs.
1192.29 Interior circulation, handrails and stanchions.
1192.31 Lighting.
1192.33 Fare box.
1192.35 Public information system.
1192.37 Stop request.
1192.39 Destination and route signs.

Subpart C—Rapid Rail Vehicles and Systems

1192.51 General.
1192.53 Doorways.
1192.55 Priority seating signs.
1192.57 Interior circulation, handrails and stanchions.
1192.59 Floor surfaces.
1192.61 Public information system.
1192.63 Between-car barriers.

Subpart D—Light Rail Vehicles and Systems

1192.71 General.
1192.73 Doorways.
1192.75 Priority seating signs.
1192.77 Interior circulation, handrails and stanchions.
1192.79 Floors, steps and thresholds.
1192.81 Lighting.
1192.83 Mobility aid accessibility.
1192.85 Between-car barriers.
1192.87 Public information system.

Subpart E—Commuter Rail Cars and Systems

1192.91 General.
1192.93 Doorways.
1192.95 Mobility aid accessibility.
1192.97 Interior circulation, handrails and stanchions.
1192.99 Floors, steps and thresholds.
1192.101 Lighting.
1192.103 Public information system.
1192.105 Priority seating signs.
1192.107 Restrooms.
1192.109 Between-car barriers.

Subpart F—Intercity Rail Cars and Systems

1192.111 General.
1192.113 Doorways.
1192.115 Interior circulation, handrails and stanchions.
1192.117 Floors, steps and thresholds.
1192.119 Lighting.
1192.121 Public information system.
1192.123 Restrooms.

1192.125 Mobility aid accessibility.
1192.127 Sleeping compartments.

Subpart G—Over-the-Road Buses and Systems

1192.151 General.
1192.153 Doors, steps and thresholds.
1192.155 Interior circulation, handrails and stanchions.
1192.157 Lighting.
1192.159 Mobility aid accessibility. [Reserved]

Subpart H—Other Vehicles and Systems

1192.171 General.
1192.173 Automated guideway transit vehicles and systems.
1192.175 High-speed rail cars, monorails and systems.
1192.177 Ferries, excursion boats and other vessels. [Reserved]
1192.179 Trams, similar vehicles, and systems.

Figures in Part 1192

Appendix to Part 1192—Advisory Guidance

Authority: Americans With Disabilities Act of 1990, Pub. L. 101–336, 104 Stat. 370 (42 U.S.C. 12204).

Subpart A—General

§ 1192.1 Purpose.

This part provides minimum guidelines and requirements for accessibility standards to be issued by the Department of Transportation in 49 CFR part 37 for transportation vehicles required to be accessible by the Americans with Disabilities Act (ADA) of 1990 (42 U.S.C. 12101 et seq).

§ 1192.2 Equivalent Facilitation

Departures from particular technical and scoping requirements of these guidelines by use of other designs and technologies are permitted where the alternative designs and technologies used will provide substantially equivalent or greater access to and usability of the vehicle. Departures are to be considered on a case-by-case basis by the Department of Transportation under the procedure set forth in 49 CFR 37.7.

§ 1192.3 Definitions.

Accessible means, with respect to vehicles covered by this part, compliance with the provisions of this part.

Automated guideway transit (AGT) system means a fixed-guideway transportation system which operates with automated (driverless) individual vehicles or multi-car trains. Service may be on a fixed schedule or in response to a passenger-activated call button. Such systems using small, slow moving vehicles, often operated in airports and amusement parks, are sometimes called "people movers".

Bus means any of several types of self-propelled vehicles, other than an over-the-road bus, generally rubber tired, intended for use on city streets, highways, and busways, including but not limited to minibuses, forty- and thirty-foot transit buses, articulated buses, double-deck buses, and electric powered trolley buses, used to provide designated or specified public transportation services. Self-propelled, rubber tire vehicles designed to look like antique or vintage trolleys or streetcars are considered buses.

Common wheelchairs and mobility aids means belonging to a class of three or four wheeled devices, usable indoors, designed for and used by persons with mobility impairments which do not exceed 30 inches in width and 48 inches in length, measured 2 inches above the ground, and do not weigh more than 600 pounds when occupied.

Commuter rail car means a rail passenger car obtained by a commuter authority (as defined by 49 CFR 37.3) for use in commuter rail transportation.

Commuter rail transportation means short-haul rail passenger service operating in metropolitan and suburban areas, operated by a commuter authority, whether within or across the geographical boundaries of a state, usually characterized by reduced fare, multiple ride, and commutation tickets and by morning and evening peak period operations. This term does not include light or rapid rail transportation.

Demand responsive system means any system of transporting individuals, including the provision of designated public transportation service by public entities and the provision of transportation service by private entities, including but not limited to specified public transportation service, which is not a fixed route system.

Designated public transportation means transportation provided by a public entity (other than public school transportation) by bus, rail, or other conveyance (other than transportation by aircraft or intercity or commuter rail transportation) that provides the general public with general or special service, including charter service, on a regular and continuing basis.

Fixed route system means a system of transporting individuals (other than by aircraft), including the provision of designated public transportation service by public entities and the provision of transportation service by private entities, including but not limited to specified public transportation service, on which a vehicle is operated along a prescribed route according to a fixed schedule.

High speed rail means an intercity-type rail service which operates primarily on a dedicated guideway or track not used, for the most part, by freight, including, but not limited to, trains on welded rail, magnetically levitated (maglev) vehicles on a special guideway, or other advanced technology vehicles, designed to travel at speeds in excess of those possible on other types of railroads.

Intercity rail passenger car means a rail car intended for use by revenue passengers obtained by the National Railroad Passenger Corporation (Amtrak) for use in intercity rail transportation.

Intercity rail transportation means transportation provided by Amtrak.

Light rail means a streetcar-type vehicle railway operated on city streets, semi-private rights-of-way, or exclusive private rights-of-way. Service may be provided by step-entry vehicles or by level-boarding.

New vehicle means a vehicle which is offered for sale or lease after manufacture without any prior use.

Over-the-road bus means a vehicle characterized by an elevated passenger deck located over a baggage compartment.

Rapid rail means a subway-type transit vehicle railway operated on exclusive private rights-of-way with high-level platform stations. Rapid rail may also operate on elevated or at-grade level track separated from other traffic.

Remanufactured vehicle means a vehicle which has been structurally restored and has had new or rebuilt major components installed to extend its service life.

Specified public transportation means transportation by bus, rail, or any other conveyance (other than aircraft) provided by a private entity to the general public, with general or special service (including charter service) on a regular and continuing basis.

Tram means any of several types of motor vehicles consisting of a tractor unit, with or without passenger accommodations, and one or more passenger trailer units, including but not limited to vehicles providing shuttle service to remote parking areas, between hotels and other public accommodations, and between and within amusement parks and other recreation areas.

Used vehicle means a vehicle with prior use.

§ 1192.4 Miscellaneous instructions.

(a) *Dimensional conventions.* Dimensions that are not noted as minimum or maximum are absolute.

(b) *Dimensional tolerances.* All dimensions are subject to conventional engineering tolerances for material properties and field conditions, including normal anticipated wear not exceeding accepted industry-wide standards and practices.

(c) *Notes.* The text of these guidelines does not contain notes or footnotes. Additional information, explanations, and advisory materials are located in the Appendix.

(d) *General terminology.* The terms used in this part shall have the following meanings:

(1) *Comply with* means meet one or more specification of these guidelines.

(2) *If* or *if * * * then* denotes a specification that applies only when the conditions described are present.

(3) *May* denotes an option or alternative.

(4) *Shall* denotes a mandatory specification or requirement.

(5) *Should* denotes an advisory specification or recommendation and is used only in the appendix to this part.

Subpart B—Buses, Vans and Systems

§ 1192.21 General.

(a) New, used or remanufactured buses and vans (except over-the-road buses covered by subpart G of this part), to be considered accessible by regulations issued by the Department of Transportation in 49 CFR part 37, shall comply with the applicable provisions of this subpart.

(b) If portions of the vehicle are modified in a way that affects or could affect accessibility, each such portion shall comply, to the extent practicable, with the applicable provisions of this subpart. This provision does not require that inaccessible buses be retrofitted with lifts, ramps or other boarding devices.

§ 1192.23 Mobility aid accessibility.

(a) *General.* All vehicles covered by this subpart shall provide a level-change mechanism or boarding device (e.g., lift or ramp) complying with paragraph (b) or (c) of this section and sufficient clearances to permit a wheelchair or other mobility aid user to reach a securement location. At least two securement locations and devices, complying with paragraph (d) of this section, shall be provided on vehicles in excess of 22 feet in length; at least one securement location and device, complying with paragraph (d) of this section, shall be provided on vehicles 22 feet in length or less.

(b) *Vehicle lift*—(1) *Design load.* The design load of the lift shall be at least 600 pounds. Working parts, such as cables, pulleys, and shafts, which can be expected to wear, and upon which the lift depends for support of the load, shall have a safety factor of at least six, based on the ultimate strength of the material. Nonworking parts, such as platform, frame, and attachment hardware which would not be expected to wear, shall have a safety factor of at least three, based on the ultimate strength of the material.

(2) *Controls*—(i) *Requirements.* The controls shall be interlocked with the vehicle brakes, transmission, or door, or shall provide other appropriate mechanisms or systems, to ensure that the vehicle cannot be moved when the lift is not stowed and so the lift cannot be deployed unless the interlocks or systems are engaged. The lift shall deploy to all levels (i.e., ground, curb, and intermediate positions) normally encountered in the operating environment. Where provided, each control for deploying, lowering, raising, and stowing the lift and lowering the roll-off barrier shall be of a momentary contact type requiring continuous manual pressure by the operator and shall not allow improper lift sequencing when the lift platform is occupied. The controls shall allow reversal of the lift operation sequence, such as raising or lowering a platform that is part way down, without allowing an occupied platform to fold or retract into the stowed position.

(ii) *Exception.* Where the lift is designed to deploy with its long dimension parallel to the vehicle axis and which pivots into or out of the vehicle while occupied (i.e., "rotary lift"), the requirements of this paragraph prohibiting the lift from being stowed while occupied shall not apply if the stowed position is within the passenger compartment and the lift is intended to be stowed while occupied.

(3) *Emergency operation.* The lift shall incorporate an emergency method of deploying, lowering to ground level with a lift occupant, and raising and stowing the empty lift if the power to the lift fails. No emergency method, manual or otherwise, shall be capable of being operated in a manner that could be hazardous to the lift occupant or to the operator when operated according to manufacturer's instructions, and shall not permit the platform to be stowed or folded when occupied, unless the lift is a rotary lift and is intended to be stowed while occupied.

(4) *Power or equipment failure.* Platforms stowed in a vertical position, and deployed platforms when occupied, shall have provisions to prevent their deploying, falling, or folding any faster than 12 inches/second or their dropping of an occupant in the event of a single failure of any load carrying component.

(5) *Platform barriers.* The lift platform shall be equipped with barriers to prevent any of the wheels of a wheelchair or mobility aid from rolling off the platform during its operation. A movable barrier or inherent design feature shall prevent a wheelchair or mobility aid from rolling off the edge closest to the vehicle until the platform is in its fully raised position. Each side of the lift platform which extends beyond the vehicle in its raised position shall have a barrier a minimum 1½ inches high. Such barriers shall not interfere with maneuvering into or out of the aisle. The loading-edge barrier (outer barrier) which functions as a loading ramp when the lift is at ground level, shall be sufficient when raised or closed, or a supplementary system shall be provided, to prevent a power wheelchair or mobility aid from riding over or defeating it. The outer barrier of the lift shall automatically raise or close, or a supplementary system shall automatically engage, and remain raised, closed, or engaged at all times that the platform is more than 3 inches above the roadway or sidewalk and the platform is occupied. Alternatively, a barrier or system may be raised, lowered, opened, closed, engaged, or disengaged by the lift operator, provided an interlock or inherent design feature prevents the lift from rising unless the barrier is raised or closed or the supplementary system is engaged.

(6) *Platform surface.* The platform surface shall be free of any protrusions over ¼ inch high and shall be slip resistant. The platform shall have a minimum clear width of 28½ inches at the platform, a minimum clear width of 30 inches measured from 2 inches above the platform surface to 30 inches above the platform, and a minimum clear length of 48 inches measured from 2 inches above the surface of the platform to 30 inches above the surface of the platform. (See Fig. 1)

(7) *Platform gaps.* Any openings between the platform surface and the raised barriers shall not exceed ⅝ inch in width. When the platform is at vehicle floor height with the inner barrier (if applicable) down or retracted, gaps between the forward lift platform edge and the vehicle floor shall not exceed ½ inch horizontally and ⅝ inch vertically. Platforms on semi-automatic

lifts may have a hand hold not exceeding 1½ inches by 4½ inches located between the edge barriers.

(8) *Platform entrance ramp.* The entrance ramp, or loading-edge barrier used as a ramp, shall not exceed a slope of 1:8, measured on level ground, for a maximum rise of 3 inches, and the transition from roadway or sidewalk to ramp may be vertical without edge treatment up to ¼ inch. Thresholds between ¼ inch and ½ inch high shall be beveled with a slope no greater than 1:2.

(9) *Platform deflection.* The lift platform (not including the entrance ramp) shall not deflect more than 3 degrees (exclusive of vehicle roll or pitch) in any direction between its unloaded position and its position when loaded with 600 pounds applied through a 26 inch by 26 inch test pallet at the centroid of the platform.

(10) *Platform movement.* No part of the platform shall move at a rate exceeding 6 inches/second during lowering and lifting an occupant, and shall not exceed 12 inches/second during deploying or stowing. This requirement does not apply to the deployment or stowage cycles of lifts that are manually deployed or stowed. The maximum platform horizontal and vertical acceleration when occupied shall be 0.3g.

(11) *Boarding direction.* The lift shall permit both inboard and outboard facing of wheelchair and mobility aid users.

(12) *Use by standees.* Lifts shall accommodate persons using walkers, crutches, canes or braces or who otherwise have difficulty using steps. The platform may be marked to indicate a preferred standing position.

(13) *Handrails.* Platforms on lifts shall be equipped with handrails on two sides, which move in tandem with the lift, and which shall be graspable and provide support to standees throughout the entire lift operation. Handrails shall have a usable component at least 8 inches long with the lowest portion a minimum 30 inches above the platform and the highest portion a maximum 38 inches above the platform. The handrails shall be capable of withstanding a force of 100 pounds concentrated at any point on the handrail without permanent deformation of the rail or its supporting structure. The handrail shall have a cross-sectional diameter between 1¼ inches and 1½ inches or shall provide an equivalent grasping surface, and have eased edges with corner radii of not less than ⅛ inch. Handrails shall be placed to provide a minimum 1½ inches knuckle clearance from the nearest adjacent surface. Handrails shall not interfere with wheelchair or mobility aid maneuverability when entering or leaving the vehicle.

(c) *Vehicle ramp*—(1) *Design load.* Ramps 30 inches or longer shall support a load of 600 pounds, placed at the centroid of the ramp distributed over an area of 26 inches by 26 inches, with a safety factor of at least 3 based on the ultimate strength of the material. Ramps shorter than 30 inches shall support a load of 300 pounds.

(2) *Ramp surface.* The ramp surface shall be continuous and slip resistant; shall not have protrusions from the surface greater than ¼ inch high; shall have a clear width of 30 inches; and shall accommodate both four-wheel and three-wheel mobility aids.

(3) *Ramp threshold.* The transition from roadway or sidewalk and the transition from vehicle floor to the ramp may be vertical without edge treatment up to ¼ inch. Changes in level between ¼ inch and ½ inch shall be beveled with a slope no greater than 1:2.

(4) *Ramp barriers.* Each side of the ramp shall have barriers at least 2 inches high to prevent mobility aid wheels from slipping off.

(5) *Slope.* Ramps shall have the least slope practicable and shall not exceed 1:4 when deployed to ground level. If the height of the vehicle floor from which the ramp is deployed is 3 inches or less above a 6-inch curb, a maximum slope of 1:4 is permitted; if the height of the vehicle floor from which the ramp is deployed is 6 inches or less, but greater than 3 inches, above a 6-inch curb, a maximum slope of 1:6 is permitted; if the height of the vehicle floor from which the ramp is deployed is 9 inches or less, but greater than 6 inches, above a 6-inch curb, a maximum slope of 1:8 is permitted; if the height of the vehicle floor from which the ramp is deployed is greater than 9 inches above a 6-inch curb, a slope of 1:12 shall be achieved. Folding or telescoping ramps are permitted provided they meet all structural requirements of this section.

(6) *Attachment.* When in use for boarding or alighting, the ramp shall be firmly attached to the vehicle so that it is not subject to displacement when loading or unloading a heavy power mobility aid and that no gap between vehicle and ramp exceeds ⅝ inch.

(7) *Stowage.* A compartment, securement system, or other appropriate method shall be provided to ensure that stowed ramps, including portable ramps stowed in the passenger area, do not impinge on a passenger's wheelchair or mobility aid or pose any hazard to passengers in the event of a sudden stop or maneuver.

(8) *Handrails.* If provided, handrails shall allow persons with disabilities to grasp them from outside the vehicle while starting to board, and to continue to use them throughout the boarding process, and shall have the top between 30 inches and 38 inches above the ramp surface. The handrails shall be capable of withstanding a force of 100 pounds concentrated at any point on the handrail without permanent deformation of the rail or its supporting structure. The handrail shall have a cross-sectional diameter between 1¼ inches and 1½ inches or shall provide an equivalent grasping surface, and have eased edges with corner radii of not less than ⅛ inch. Handrails shall not interfere with wheelchair or mobility aid maneuverability when entering or leaving the vehicle.

(d) *Securement devices*—(1) *Design load.* Securement systems on vehicles with GVWRs of 30,000 pounds or above, and their attachments to such vehicles, shall restrain a force in the forward longitudinal direction of up to 2,000 pounds per securement leg or clamping mechanism and a minimum of 4,000 pounds for each mobility aid. Securement systems on vehicles with GVWRs of up to 30,000 pounds, and their attachments to such vehicles, shall restrain a force in the forward longitudinal direction of up to 2,500 pounds per securement leg or clamping mechanism and a minimum of 5,000 pounds for each mobility aid.

(2) *Location and size.* The securernent system shall be placed as near to the accessible entrance as practicable and shall have a clear floor area of 30 inches by 48 inches. Such space shall adjoin, and may overlap, an access path. Not more than 6 inches of the required clear floor space may be accommodated for footrests under another seat provided there is a minimum of 9 inches from the floor to the lowest part of the seat overhanging the space. Securement areas may have fold-down seats to accommodate other passengers when a wheelchair or mobility aid is not occupying the area, provided the seats, when folded up, do not obstruct the clear floor space required. (See Fig. 2)

(3) *Mobility aids accommodated.* The securement system shall secure common wheelchairs and mobility aids and shall either be automatic or easily attached by a person familiar with the system and mobility aid and having average dexterity.

(4) *Orientation.* In vehicles in excess of 22 feet in length, at least one securement device or system required by paragraph (a) of this section shall secure the wheelchair or mobility aid

facing toward the front of the vehicle. In vehicles 22 feet in length or less, the required securement device may secure the wheelchair or mobility aid either facing toward the front of the vehicle or rearward. Additional securement devices or systems shall secure the wheelchair or mobility aid facing forward or rearward. Where the wheelchair or mobility aid is secured facing the rear of the vehicle, a padded barrier shall be provided. The padded barrier shall extend from a height of 38 inches from the vehicle floor to a height of 56 inches from the vehicle floor with a width of 18 inches, laterally centered immediately in back of the seated individual. Such barriers need not be solid provided equivalent protection is afforded.

(5) *Movement.* When the wheelchair or mobility aid is secured in accordance with manufacturer's instructions, the securement system shall limit the movement of an occupied wheelchair or mobility aid to no more than 2 inches in any direction under normal vehicle operating conditions.

(6) *Stowage.* When not being used for securement, or when the securement area can be used by standees, the securement system shall not interfere with passenger movement, shall not present any hazardous condition, shall be reasonably protected from vandalism, and shall be readily accessed when needed for use.

(7) *Seat belt and shoulder harness.* For each wheelchair or mobility aid securement device provided, a passenger seat belt and shoulder harness, complying with all applicable provisions of 49 CFR part 571, shall also be provided for use by wheelchair or mobility aid users. Such seat belts and shoulder harnesses shall not be used in lieu of a device which secures the wheelchair or mobility aid itself.

§ 1192.25 Doors, steps and thresholds.

(a) *Slip resistance.* All aisles, steps, floor areas where people walk and floors in securement locations shall have slip-resistant surfaces.

(b) *Contrast.* All step edges, thresholds, and the boarding edge of ramps or lift platforms shall have a band of color(s) running the full width of the step or edge which contrasts from the step tread and riser, or lift or ramp surface, either light-on-dark or dark-on-light.

(c) *Door height.* For vehicles in excess of 22 feet in length, the overhead clearance between the top of the door opening and the raised lift platform, or highest point of a ramp, shall be a minimum of 68 inches. For vehicles of 22 feet in length or less, the overhead clearance between the top of the door opening and the raised lift platform, or highest point of a ramp, shall be a minimum of 56 inches.

§ 1192.27 Priority seating signs.

(a) Each vehicle shall contain sign(s) which indicate that seats in the front of the vehicle are priority seats for persons with disabilities, and that other passengers should make such seats available to those who wish to use them. At least one set of forward-facing seats shall be so designated.

(b) Each securement location shall have a sign designating it as such.

(c) Characters on signs required by paragraphs (a) and (b) of this section shall have a width-to-height ratio between 3:5 and 1:1 and a stroke width-to-height ratio between 1:5 and 1:10, with a minimum character height (using an upper case "X") of ⅝ inch, with "wide" spacing (generally, the space between letters shall be 1/16 the height of upper case letters), and shall contrast with the background either light-on-dark or dark-on-light.

§ 1192.29 Interior circulation, handrails and stanchions.

(a) Interior handrails and stanchions shall permit sufficient turning and maneuvering space for wheelchairs and other mobility aids to reach a securement location from the lift or ramp.

(b) Handrails and stanchions shall be provided in the entrance to the vehicle in a configuration which allows persons with disabilities to grasp such assists from outside the vehicle while starting to board, and to continue using such assists throughout the boarding and fare collection process. Handrails shall have a cross-sectional diameter between 1¼ inches and 1½ inches or shall provide an equivalent grasping surface, and have eased edges with corner radii of not less than ⅛ inch. Handrails shall be placed to provide a minimum 1½ inches knuckle clearance from the nearest adjacent surface. Where on-board fare collection devices are used on vehicles in excess of 22 feet in length, a horizontal passenger assist shall be located across the front of the vehicle and shall prevent passengers from sustaining injuries on the fare collection device or windshield in the event of a sudden deceleration. Without restricting the vestibule space, the assist shall provide support for a boarding passenger from the front door through the boarding procedure. Passengers shall be able to lean against the assist for security while paying fares.

(c) For vehicles in excess of 22 feet in length, overhead handrail(s) shall be provided which shall be continuous except for a gap at the rear doorway.

(d) Handrails and stanchions shall be sufficient to permit safe boarding, on-board circulation, seating and standing assistance, and alighting by persons with disabilities.

(e) For vehicles in excess of 22 feet in length with front-door lifts or ramps, vertical stanchions immediately behind the driver shall either terminate at the lower edge of the aisle-facing seats, if applicable, or be "dog-legged" so that the floor attachment does not impede or interfere with wheelchair footrests. If the driver seat platform must be passed by a wheelchair or mobility aid user entering the vehicle, the platform, to the maximum extent practicable, shall not extend into the aisle or vestibule beyond the wheel housing.

(f) For vehicles in excess of 22 feet in length, the minimum interior height along the path from the lift to the securement location shall be 68 inches. For vehicles of 22 feet in length or less, the minimum interior height from lift to securement location shall be 56 inches.

§ 1192.31 Lighting.

(a) Any stepwell or doorway immediately adjacent to the driver shall have, when the door is open, at least 2 foot-candles of illumination measured on the step tread or lift platform.

(b) Other stepwells and doorways, including doorways in which lifts or ramps are installed, shall have, at all times, at least 2 foot-candles of illumination measured on the step tread, or lift or ramp, when deployed at the vehicle floor level.

(c) The vehicle doorways, including doorways in which lifts or ramps are installed, shall have outside light(s) which, when the door is open, provide at least 1 foot-candle of illumination on the street surface for a distance of 3 feet perpendicular to all points on the bottom step tread outer edge. Such light(s) shall be located below window level and shielded to protect the eyes of entering and exiting passengers.

§ 1192.33 Fare box.

Where provided, the farebox shall be located as far forward as practicable and shall not obstruct traffic in the vestibule, especially wheelchairs or mobility aids.

§ 1192.35 Public information system.

(a) Vehicles in excess of 22 feet in length, used in multiple-stop, fixed-route service, shall be equipped with a public address system permitting the driver, or recorded or digitized human speech messages, to announce stops and

provide other passenger information within the vehicle.

(b) [Reserved]

§ 1192.37 Stop request.

(a) Where passengers may board or alight at multiple stops at their option, vehicles in excess of 22 feet in length shall provide controls adjacent to the securement location for requesting stops and which alerts the driver that a mobility aid user wishes to disembark. Such a system shall provide auditory and visual indications that the request has been made.

(b) Controls required by paragraph (a) of this section shall be mounted no higher than 48 inches and no lower than 15 inches above the floor, shall be operable with one hand and shall not require tight grasping, pinching, or twisting of the wrist. The force required to activate controls shall be no greater than 5 lbf (22.2 N).

§ 1192.39 Destination and route signs.

(a) Where destination or route information is displayed on the exterior of a vehicle, each vehicle shall have illuminated signs on the front and boarding side of the vehicle.

(b) Characters on signs required by paragraph (a) of this section shall have a width-to-height ratio between 3:5 and 1:1 and a stroke width-to-height ratio between 1:5 and 1:10, with a minimum character height (using an upper case "X") of 1 inch for signs on the boarding side and a minimum character height of 2 inches for front "headsigns", with "wide" spacing (generally, the space between letters shall be 1/16 the height of upper case letters), and shall contrast with the background, either dark-on-light or light-on-dark.

Subpart C—Rapid Rail Vehicles and Systems

§ 1192.51 General.

(a) New, used and remanufactured rapid rail vehicles, to be considered accessible by regulations issued by the Department of Transportation in 49 CFR part 37, shall comply with this subpart.

(b) If portions of the vehicle are modified in a way that affects or could affect accessibility, each such portion shall comply, to the extent practicable, with the applicable provisions of this subpart. This provision does not require that inaccessible vehicles be retrofitted with lifts, ramps or other boarding devices.

(c) Existing vehicles which are retrofitted to comply with the "one-car-per-train rule" of 49 CFR 37.93 shall comply with §§ 1192.55, 1192.57(b), 1192.59 and shall have, in new and key stations, at least one door complying with § 1192.53(a)(1), (b) and (d). Removal of seats is not required. Vehicles previously designed and manufactured in accordance with the accessibility requirements of 49 CFR part 609 or Department of Transportation regulations implementing section 504 of the Rehabilitation Act of 1973 that were in effect before October 7, 1991, and which can be entered and used from stations in which they are to be operated, may be used to satisfy the requirements of 49 CFR 37.93.

§ 1192.53 Doorways.

(a) *Clear width.* (1) Passenger doorways on vehicle sides shall have clear openings at least 32 inches wide when open.

(2) If doorways connecting adjoining cars in a multi-car train are provided, and if such doorway is connected by an aisle with a minimum clear width of 30 inches to one or more spaces where wheelchair or mobility aid users can be accommodated, then such doorway shall have a minimum clear opening of 30 inches to permit wheelchair and mobility aid users to be evacuated to an adjoining vehicle in an emergency.

(b) *Signage.* The International Symbol of Accessibility shall be displayed on the exterior of accessible vehicles operating on an accessible and rapid rail system unless all vehicles area accessible and are not marked by the access symbol. (See Fig. 6)

(c) *Signals.* Auditory and visual warning signals shall be provided to alert passengers of closing doors.

(d) *Coordination with boarding platform*—(1) *Requirements.* Where new vehicles will operate in new stations, the design of vehicles shall be coordinated with the boarding platform design such that the horizontal gap between each vehicle door at rest and the platform shall be no greater than 3 inches and the height of the vehicle floor shall be within plus or minus 5/8 inch of the platform height under all normal passenger load conditions. Vertical alignment may be accomplished by vehicle air suspension or other suitable means of meeting the requirement.

(2) *Exception.* New vehicles operating in existing stations may have a floor height within plus or minus 1½ inches of the platform height. At key stations, the horizontal gap between at least one door of each such vehicle and the platform shall be no greater than 3 inches.

(3) *Exception.* Retrofitted vehicles shall be coordinated with the platform in new and key stations such that the horizontal gap shall be no greater than 4 inches and the height of the vehicle floor, under 50% passenger load, shall be within plus or minus 2 inches of the platform height.

§ 1192.55 Priority seating signs.

(a) Each vehicle shall contain sign(s) which indicate that certain seats are priority seats for persons with disabilities, and that other passengers should make such seats available to those who wish to use them.

(b) Characters on signs required by paragraph (a) of this section shall have a width-to-height ratio between 3:5 and 1:1 and a stroke width-to-height ratio between 1:5 and 1:10, with a minimum character height (using an upper case "X") of 5/8 inch, with "Wide" spacing (generally, the space between letters shall be 1/16 the height of upper case letters), and shall contrast with the background, either light-on-dark or dark-on-light.

§ 1192.57 Interior circulation, handrails and stanchions.

(a) Handrails and stanchions shall be provided to assist safe boarding, on-board circulation, seating and standing assistance, and alighting by persons with disabilities.

(b) Handrails, stanchions, and seats shall allow a route at least 32 inches wide so that at least two wheelchair or mobility aid users can enter the vehicle and position the wheelchairs or mobility aids in areas, each having a minimum clear space of 48 inches by 30 inches, which do not unduly restrict movement of other passengers. Space to accommodate wheelchairs and mobility aids may be provided within the normal area used by standees and designation of specific spaces is not required. Particular attention shall be given to ensuring maximum maneuverability immediately inside doors. Ample vertical stanchions from ceiling to seat-back rails shall be provided. Vertical stanchions from ceiling to floor shall not interfere with wheelchair or mobility aid user circulation and shall be kept to a minimum in the vicinity of doors.

(c) The diameter or width of the gripping surface of handrails and stanchions shall be 1¼ inches to 1½ inches or provide an equivalent gripping surface and shall provide a minimum 1½ inches knuckle clearance from the nearest adjacent surface.

§ 1192.59 Floor surfaces.

Floor surfaces on aisles, places for standees, and areas where wheelchair and mobility aid users are to be accommodated shall be slip-resistant.

§ 1192.61 Public information system.

(a)(1) *Requirements.* Each vehicle shall be equipped with a public address system permitting transportation system personnel, or recorded or digitized human speech messages, to announce stations and provide other passenger information. Alternative systems or devices which provide equivalent access are also permitted. Each vehicle operating in stations having more than one line or route shall have an external public address system to permit transportation system personnel, or recorded or digitized human speech messages, to announce train, route, or line identification information.

(2) *Exception.* Where station announcement systems provide information on arriving trains, an external train speaker is not required.

(b) [Reserved].

§ 1192.63 Between-car barriers.

(a) *Requirement.* Suitable devices or systems shall be provided to prevent, deter or warn individuals from inadvertently stepping off the platform between cars. Acceptable solutions include, but are not limited to, pantograph gates, chains, motion detectors or similar devices.

(b) *Exception.* Between-car barriers are not required where platform screens are provided which close off the platform edge and open only when trains are correctly aligned with the doors.

Subpart D—Light Rail Vehicles and Systems

§ 1192.71 General.

(a) New, used and remanufactured light rail vehicles, to be considered accessible by regulations issued by the Department of Transportation in 49 CFR part 37, shall comply with this subpart.

(b)(1) Vehicles intended to be operated solely in light rail systems confined entirely to a dedicated right-of-way, and for which all stations or stops are designed and constructed for revenue service after the effective date of standards for design and construction issued pursuant to subpart C of 49 CFR part 37, shall provide level boarding and shall comply with §§ 1192.73(d)(1) and 1192.85.

(2) Vehicles designed for, and operated on, pedestrian malls, city streets, or other areas where level boarding is not practicable shall provide wayside or car-borne lifts, mini-high platforms, or other means of access in compliance with § 1192.83 (b) or (c).

(c) If portions of the vehicle are modified in a way that affects or could affect accessibility, each such portion shall comply, to the extent practicable, with the applicable provisions of this subpart. This provision does not require that inaccessible vehicles be retrofitted with lifts, ramps or other boarding devices.

(d) Existing vehicles retrofitted to comply with the "one-car-per-train rule" at 49 CFR 37.93 shall comply with §§ 1192.75, 1192.77(c), 1192.79(a) and 1192.83(a) and shall have, in new and key stations, at least one door which complies with § 1192.73 (a)(1), (b) and (d). Vehicles previously designed and manufactured in accordance with the accessibility requirements of 49 CFR part 609 or Department of Transportation regulations implementing section 504 of the Rehabilitation Act of 1973 that were in effect before October 7, 1991, and which can be entered and used from stations in which they are to be operated, may be used to satisfy the requirements of 49 CFR 37.93.

§ 1192.73 Doorways.

(a) *Clear width.* (1) All passenger doorways on vehicle sides shall have minimum clear openings of 32 inches when open.

(2) If doorways connecting adjoining cars in a multi-car train are provided, and if such doorway is connected by an aisle with a minimum clear width of 30 inches to one or more spaces where wheelchair or mobility aid users can be accommodated, then such doorway shall have a minimum clear opening of 30 inches to permit wheelchair and mobility aid users to be evacuated to an adjoining vehicle in an emergency.

(b) *Signage.* The International Symbol of Accessibility shall be displayed on the exterior of each vehicle operating on an accessible light rail system unless all vehicles are accessible and are not marked by the access symbol (See Fig. 6).

(c) *Signals.* Auditory and visual warning signals shall be provided to alert passengers of closing doors.

(d) *Coordination with boarding platform*—(1) *Requirements.* The design of level-entry vehicles shall be coordinated with the boarding platform or mini-high platform design so that the horizontal gap between a vehicle at rest and the platform shall be no greater than 3 inches and the height of the vehicle floor shall be within plus or minus ⅝ inch of the platform height. Vertical alignment may be accomplished by vehicle air suspension, automatic ramps or lifts, or any combination.

(2) *Exception.* New vehicles operating in existing stations may have a floor height within plus or minus 1½ inches of the platform height. At key stations, the horizontal gap between at least one door of each such vehicle and the platform shall be no greater than 3 inches.

(3) *Exception.* Retrofitted vehicles shall be coordinated with the platform in new and key stations such that the horizontal gap shall be no greater than 4 inches and the height of the vehicle floor, under 50% passenger load, shall be within plus or minus 2 inches of the platform height.

(4) *Exception.* Where it is not operationally or structurally practicable to meet the horizontal or vertical requirements of paragraphs (d) (1), (2) or (3) of this section, platform or vehicle devices complying with § 1192.83(b) or platform or vehicle mounted ramps or bridge plates complying with § 1192.83(c) shall be provided.

§ 1192.75 Priority seating signs.

(a) Each vehicle shall contain sign(s) which indicate that certain seats are priority seats for persons with disabilities, and that other passengers should make such seats available to those who wish to use them.

(b) Where designated wheelchair or mobility aid seating locations are provided, signs shall indicate the location and advise other passengers of the need to permit wheelchair and mobility aid users to occupy them.

(c) Characters on signs required by paragraphs (a) or (b) of this section shall have a width-to-height ratio between 3:5 and 1:1 and a stroke width-to-height ratio between 1:5 and 1:10, with a minimum character height (using an upper case "X") of ⅝ inch, with "wide" spacing (generally, the space between letters shall be 1/16 the height of upper case letters), and shall contrast with the background, either light-on-dark or dark-on-light.

§ 1192.77 Interior circulation, handrails and stanchions.

(a) Handrails and stanchions shall be sufficient to permit safe boarding, on-board circulation, seating and standing assistance, and alighting by persons with disabilities.

(b) At entrances equipped with steps, handrails and stanchions shall be provided in the entrance to the vehicle in a configuration which allows passengers to grasp such assists from outside the vehicle while starting to board, and to continue using such handrails or stanchions throughout the boarding process. Handrails shall have a cross-sectional diameter between 1¼ inches and 1½ inches or shall provide an equivalent grasping surface, and have eased edges with corner radii of

not less than ⅛ inch. Handrails shall be placed to provide a minimum 1½ inches knuckle clearance from the nearest adjacent surface. Where on-board fare collection devices are used, a horizontal passenger assist shall be located between boarding passengers and the fare collection device and shall prevent passengers from sustaining injuries on the fare collection device or windshield in the event of a sudden deceleration. Without restricting the vestibule space, the assist shall provide support for a boarding passenger from the door through the boarding procedure. Passengers shall be able to lean against the assist for security while paying fares.

(c) At all doors on level-entry vehicles, and at each entrance accessible by lift, ramp, bridge plate or other suitable means, handrails, stanchions, passenger seats, vehicle driver seat platforms, and fare boxes, if applicable, shall be located so as to allow a route at least 32 inches wide so that at least two wheelchair or mobility aid users can enter the vehicle and position the wheelchairs or mobility aids in areas, each having a minimum clear space of 48 inches by 30 inches, which do not unduly restrict movement of other passengers. Space to accommodate wheelchairs and mobility aids may be provided within the normal area used by standees and designation of specific spaces is not required. Particular attention shall be given to ensuring maximum maneuverability immediately inside doors. Ample vertical stanchions from ceiling to seat-back rails shall be provided. Vertical stanchions from ceiling to floor shall not interfere with wheelchair or mobility aid circulation and shall be kept to a minimum in the vicinity of accessible doors.

§ 1192.79 Floors, steps and thresholds.

(a) Floor surfaces on aisles, step treads, places for standees, and areas where wheelchair and mobility aid users are to be accommodated shall be slip-resistant.

(b) All thresholds and step edges shall have a band of color(s) running the full width of the step or threshold which contrasts from the step tread and riser or adjacent floor, either light-on-dark or dark-on-light.

§ 1192.81 Lighting.

(a) Any stepwell or doorway with a lift, ramp or bridge plate immediately adjacent to the driver shall have, when the door is open, at least 2 footcandles of illumination measured on the step tread or lift platform.

(b) Other stepwells, and doorways with lifts, ramps or bridge plates, shall have, at all times, at least 2 footcandles of illumination measured on the step tread or lift or ramp, when deployed at the vehicle floor level.

(c) The doorways of vehicles not operating at lighted station platforms shall have outside lights which provide at least 1 footcandle of illumination on the station platform or street surface for a distance of 3 feet perpendicular to all points on the bottom step tread. Such lights shall be located below window level and shielded to protect the eyes of entering and exiting passengers.

§ 1192.83 Mobility aid accessibility.

(a)(1) *General.* All new light rail vehicles, other than level entry vehicles, covered by this subpart shall provide a level-change mechanism or boarding device (e.g., lift, ramp or bridge plate) complying with either paragraph (b) or (c) of this section and sufficient clearances to permit at least two wheelchair or mobility aid users to reach areas, each with a minimum clear floor space of 48 inches by 30 inches, which do not unduly restrict passenger flow. Space to accommodate wheelchairs and mobility aids may be provided within the normal area used by standees and designation of specific spaces is not required.

(2) *Exception.* If lifts, ramps or bridge plates meeting the requirements of this section are provided on station platforms or other stops, or mini-high platforms complying with § 1192.73(d) are provided, at stations or stops required to be accessible by 49 CFR part 37, the vehicle is not required to be equipped with a car-borne device. Where each new vehicle is compatible with a single platform-mounted access system or device, additional systems or devices are not required for each vehicle provided that the single device could be used to provide access to each new vehicle if passengers using wheelchairs or mobility aids could not be accommodated on a single vehicle.

(b) *Vehicle lift*—(1) *Design load.* The design load of the lift shall be at least 600 pounds. Working parts, such as cables, pulleys, and shafts, which can be expected to wear, and upon which the lift depends for support of the load, shall have a safety factor of at least six, based on the ultimate strength of the material. Nonworking parts, such as platform, frame, and attachment hardware which would not be expected to wear, shall have a safety factor of at least three, based on the ultimate strength of the material.

(2) *Controls*—(i) *Requirements.* The controls shall be interlocked with the vehicle brakes, propulsion system, or door, or shall provide other appropriate mechanisms or systems, to ensure that the vehicle cannot be moved when the lift is not stowed and so the lift cannot be deployed unless the interlocks or systems are engaged. The lift shall deploy to all levels (i.e., ground, curb, and intermediate positions) normally encountered in the operating environment. Where provided, each control for deploying, lowering, raising, and stowing the lift and lowering the roll-off barrier shall be of a momentary contact type requiring continuous manual pressure by the operator and shall not allow improper lift sequencing when the lift platform is occupied. The controls shall allow reversal of the lift operation sequence, such as raising or lowering a platform that is part way down, without allowing an occupied platform to fold or retract into the stowed position.

(ii) *Exception.* Where physical or safety constraints prevent the deployment at some stops of a lift having its long dimension perpendicular to the vehicle axis, the transportation entity may specify a lift which is designed to deploy with its long dimension parallel to the vehicle axis and which pivots into or out of the vehicle while occupied (i.e., "rotary lift"). The requirements of paragraph (b)(2)(i) of this section prohibiting the lift from being stowed while occupied shall not apply to a lift design of this type if the stowed position is within the passenger compartment and the lift is intended to be stowed while occupied.

(iii) *Exception.* The brake or propulsion system interlocks requirement does not apply to a station platform mounted lift provided that a mechanical, electrical or other system operates to ensure that vehicles do not move when the lift is in use.

(3) *Emergency operation.* The lift shall incorporate an emergency method of deploying, lowering to ground level with a lift occupant, and raising and stowing the empty lift if the power to the lift fails. No emergency method, manual or otherwise, shall be capable of being operated in a manner that could be hazardous to the lift occupant or to the operator when operated according to manufacturer's instructions, and shall not permit the platform to be stowed or folded when occupied, unless the lift is a rotary lift intended to be stowed while occupied.

(4) *Power or equipment failure.* Lift platforms stowed in a vertical position, and deployed platforms when occupied, shall have provisions to prevent their deploying, falling, or folding any faster

than 12 inches/second or their dropping of an occupant in the event of a single failure of any load carrying component.

(5) *Platform barriers.* The lift platform shall be equipped with barriers to prevent any of the wheels of a wheelchair or mobility aid from rolling off the lift during its operation. A movable barrier or inherent design feature shall prevent a wheelchair or mobility aid from rolling off the edge closest to the vehicle until the lift is in its fully raised position. Each side of the lift platform which extends beyond the vehicle in its raised position shall have a barrier a minimum 1½ inches high. Such barriers shall not interfere with maneuvering into or out of the aisle. The loading-edge barrier (outer barrier) which functions as a loading ramp when the lift is at ground level, shall be sufficient when raised or closed, or a supplementary system shall be provided, to prevent a power wheelchair or mobility aid from riding over or defeating it. The outer barrier of the lift shall automatically rise or close, or a supplementary system shall automatically engage, and remain raised, closed, or engaged at all times that the lift is more than 3 inches above the station platform or roadway and the lift is occupied. Alternatively, a barrier or system may be raised, lowered, opened, closed, engaged or disengaged by the lift operator provided an interlock or inherent design feature prevents the lift from rising unless the barrier is raised or closed or the supplementary system is engaged.

(6) *Platform surface.* The lift platform surface shall be free of any protrusions over ¼ inch high and shall be slip resistant. The lift platform shall have a minimum clear width of 28½ inches at the platform, a minimum clear width of 30 inches measured from 2 inches above the lift platform surface to 30 inches above the surface, and a minimum clear length of 48 inches measured from 2 inches above the surface of the platform to 30 inches above the surface. (See Fig. 1)

(7) *Platform gaps.* Any openings between the lift platform surface and the raised barriers shall not exceed ⅝ inch wide. When the lift is at vehicle floor height with the inner barrier (if applicable) down or retracted, gaps between the forward lift platform edge and vehicle floor shall not exceed ½ inch horizontally and ⅝ inch vertically. Platforms on semiautomatic lifts may have a hand hold not exceeding 1½ inches by 4½ inches located between the edge barriers.

(8) *Platform entrance ramp.* The entrance ramp, or loading-edge barrier used as a ramp, shall not exceed a slope of 1:8 measured on level ground, for a maximum rise of 3 inches, and the transition from the station platform or roadway to ramp may be vertical without edge treatment up to ¼ inch. Thresholds between ¼ inch and ½ inch high shall be beveled with a slope no greater than 1:2.

(9) *Platform deflection.* The lift platform (not including the entrance ramp) shall not deflect more than 3 degrees (exclusive of vehicle roll) in any direction between its unloaded position and its position when loaded with 600 pounds applied through a 26 inch by 26 inch test pallet at the centroid of the lift platform.

(10) *Platform movement.* No part of the platform shall move at a rate exceeding 6 inches/second during lowering and lifting an occupant, and shall not exceed 12 inches/second during deploying or stowing. This requirement does not apply to the deployment or stowage cycles of lifts that are manually deployed or stowed. The maximum platform horizontal and vertical acceleration when occupied shall be 0.3g.

(11) *Boarding direction.* The lift shall permit both inboard and outboard facing of wheelchairs and mobility aids.

(12) *Use by standees.* Lifts shall accommodate persons using walkers, crutches, canes or braces or who otherwise have difficulty using steps. The lift may be marked to indicate a preferred standing position.

(13) *Handrails.* Platforms on lifts shall be equipped with handrails, on two sides, which move in tandem with the lift which shall be graspable and provide support to standees throughout the entire lift operation. Handrails shall have a usable component at least 8 inches long with the lowest portion a minimum 30 inches above the platform and the highest portion a maximum 38 inches above the platform. The handrails shall be capable of withstanding a force of 100 pounds concentrated at any point on the handrail without permanent deformation of the rail or its supporting structure. Handrails shall have a cross-sectional diameter between 1¼ inches and 1½ inches or shall provide an equivalent grasping surface, and have eased edges with corner radii of not less than ⅛ inch. Handrails shall be placed to provide a minimum 1½ inches knuckle clearance from the nearest adjacent surface. Handrails shall not interfere with wheelchair or mobility aid maneuverability when entering or leaving the vehicle.

(c) *Vehicle ramp or bridge plate*—(1) *Design load.* Ramps or bridge plates 30 inches or longer shall support a load of 600 pounds, placed at the centroid of the ramp or bridge plate distributed over an area of 26 inches by 26 inches, with a safety factor of at least 3 based on the ultimate strength of the material. Ramps or bridge plates shorter than 30 inches shall support a load of 300 pounds.

(2) *Ramp surface.* The ramp or bridge plate surface shall be continuous and slip resistant, shall not have protrusions from the surface greater than ¼ inch, shall have a clear width of 30 inches, and shall accommodate both four-wheel and three-wheel mobility aids.

(3) *Ramp threshold.* The transition from roadway or station platform and the transition from vehicle floor to the ramp or bridge plate may be vertical without edge treatment up to ¼ inch. Changes in level between ¼ inch and ½ inch shall be beveled with a slope no greater than 1:2.

(4) *Ramp barriers.* Each side of the ramp or bridge plate shall have barriers at least 2 inches high to prevent mobility aid wheels from slipping off.

(5) *Slope.* Ramps or bridge plates shall have the least slope practicable. If the height of the vehicle floor, under 50% passenger load, from which the ramp is deployed is 3 inches or less above the station platform a maximum slope of 1:4 is permitted; if the height of the vehicle floor, under 50% passenger load, from which the ramp is deployed is 6 inches or less, but more than 3 inches, above the station platform a maximum slope of 1:6 is permitted; if the height of the vehicle floor, under 50% passenger load, from which the ramp is deployed is 9 inches or less, but more than 6 inches, above the station platform a maximum slope of 1:8 is permitted; if the height of the vehicle floor, under 50% passenger load, from which the ramp is deployed is greater than 9 inches above the station platform a slope of 1:12 shall be achieved. Folding or telescoping ramps are permitted provided they meet all structural requirements of this section.

(6) *Attachment*—(i) *Requirement.* When in use for boarding or alighting, the ramp or bridge plate shall be attached to the vehicle, or otherwise prevented from moving such that it is not subject to displacement when loading or unloading a heavy power mobility aid and that any gaps between vehicle and ramp or bridge plate, and station platform and ramp or bridge plate, shall not exceed ⅝ inch.

(ii) *Exception.* Ramps or bridge plates which are attached to, and deployed from, station platforms are permitted in lieu of vehicle devices provided they meet the displacement requirements of paragraph (c)(6)(i) of this section.

(7) *Stowage.* A compartment, securement system, or other appropriate method shall be provided to ensure that stowed ramps or bridge plates, including portable ramps or bridge plates stowed in the passenger area, do not impinge on a passenger's wheelchair or mobility aid or pose any hazard to passengers in the event of a sudden stop.

(8) *Handrails.* If provided, handrails shall allow persons with disabilities to grasp them from outside the vehicle while starting to board, and to continue to use them throughout the boarding process, and shall have the top between 30 inches and 38 inches above the ramp surface. The handrails shall be capable of withstanding a force of 100 pounds concentrated at any point on the handrail without permanent deformation of the rail or its supporting structure. The handrail shall have a cross-sectional diameter between 1¼ inches and 1½ inches or shall provide an equivalent grasping surface, and have eased edges with corner radii of not less than ⅛ inch. Handrails shall not interfere with wheelchair or mobility aid maneuverability when entering or leaving the vehicle.

§ 1192.85 Between-car barriers.

Where vehicles operate in a high-platform, level-boarding mode, devices or systems shall be provided to prevent, deter or warn individuals from inadvertently stepping off the platform between cars. Appropriate devices include, but are not limited to, pantograph gates, chains, motion detectors or other suitable devices.

§ 1192.87 Public information system.

(a) Each vehicle shall be equipped with an interior public address system permitting transportation system personnel, or recorded or digitized human speech messages, to announce stations and provide other passenger information. Alternative systems or devices which provide equivalent access are also permitted.

(b) [Reserved]

Subpart E—Commuter Rail Cars and Systems

§ 1192.91 General.

(a) New, used and remanufactured commuter rail cars, to be considered accessible by regulations issued by the Department of Transportation in 49 CFR part 37, shall comply with this subpart.

(b) If portions of the car are modified in such a way that it affects or could affect accessibility, each such portion shall comply, to the extent practicable, with the applicable provisions of this subpart. This provision does not require that inaccessible cars be retrofitted with lifts, ramps or other boarding devices.

(c)(1) Commuter rail cars shall comply with §§ 1192.93(d) and 1192.109 for level boarding wherever structurally and operationally practicable.

(2) Where level boarding is not structurally or operationally practicable, commuter rail cars shall comply with § 1192.95.

(d) Existing vehicles retrofitted to comply with the "one-car-per-train rule" at 49 CFR 37.93 shall comply with §§ 1192.93(e), 1192.95(a) and 1192.107 and shall have, in new and key stations, at least one door on each side from which passengers board which complies with § 1192.93(d). Vehicles previously designed and manufactured in accordance with the program accessibility requirements of section 504 of the Rehabilitation Act of 1973, or implementing regulations issued by the Department of Transportation that were in effect before October 7, 1991, and which can be entered and used from stations in which they are to be operated, may be used to satisfy the requirements of 49 CFR 37.93.

§ 1192.93 Doorways.

(a) *Clear width.* (1) At least one door on each side of the car from which passengers board opening onto station platforms and at least one adjacent doorway into the passenger coach compartment, if provided, shall have a minimum clear opening of 32 inches.

(2) If doorways connecting adjoining cars in a multi-car train are provided, and if such doorway is connected by an aisle with a minimum clear width of 30 inches to one or more spaces where wheelchair or mobility aid users can be accommodated, then such doorway shall have, to the maximum extent practicable in accordance with the regulations issued under the Federal Railroad Safety Act of 1970 (49 CFR parts 229 and 231), a clear opening of 30 inches.

(b) *Passageways.* A route at least 32 inches wide shall be provided from doors required to be accessible by paragraph (a)(1) of this section to seating locations complying with § 1192.95(d). In cars where such doorways require passage through a vestibule, such vestibule shall have a minimum width of 42 inches. (See Fig. 3)

(c) *Signals.* If doors to the platform close automatically or from a remote location, auditory and visual warning signals shall be provided to alert passengers of closing doors.

(d) *Coordination with boarding platform*—(1) *Requirements.* Cars operating in stations with high platforms, or mini-high platforms, shall be coordinated with the boarding platform design such that the horizontal gap between a car at rest and the platform shall be no greater than 3 inches and the height of the car floor shall be within plus or minus ⅝ inch of the platform height. Vertical alignment may be accomplished by car air suspension, platform lifts or other devices, or any combination.

(2) *Exception.* New vehicles operating in existing stations may have a floor height within plus or minus 1½ inches of the platform height. At key stations, the horizontal gap between at least one accessible door of each such vehicle and the platform shall be no greater than 3 inches.

(3) *Exception.* Where platform set-backs do not allow the horizontal gap or vertical alignment specified in paragraph (d) (1) or (2) of this section, car, platform or portable lifts complying with § 1192.95(b), or car or platform ramps or bridge plates, complying with § 1192.95(c), shall be provided.

(4) *Exception.* Retrofitted vehicles shall be coordinated with the platform in new and key stations such that the horizontal gap shall be no greater than 4 inches and the height of the vehicle floor, under 50% passenger load, shall be within plus or minus 2 inches of the platform height.

(e) *Signage.* The International Symbol of Accessibility shall be displayed on the exterior of all doors complying with this section unless all cars are accessible and are not marked by the access symbol (See Fig. 6). Appropriate signage shall also indicate which accessible doors are adjacent to an accessible restroom, if applicable.

§ 1192.95 Mobility aid accessibility.

(a)(1) *General.* All new commuter rail cars, other than level entry cars, covered by this subpart shall provide a level-change mechanism or boarding device (e.g., lift, ramp or bridge plate) complying with either paragraph (b) or (c) of this section; sufficient clearances to permit a wheelchair or mobility aid user to reach a seating location; and at least two wheelchair or mobility aid seating locations complying with paragraph (d) of this section.

(2) *Exception.* If portable or platform lifts, ramps or bridge plates meeting the applicable requirements of this section are provided on station platforms or other stops, or mini-high platforms complying with § 1192.93(d) are provided, at stations or stops required to be accessible by 49 CFR part 37, the car is not required to be equipped with a car-borne device. Where each new car is compatible with a single platform-

mounted access system or device, additional systems or devices are not required for each car provided that the single device could be used to provide access to each new car if passengers using wheelchairs or mobility aids could not be accommodated on a single car.

(b) *Car Lift*—(1) *Design load.* The design load of the lift shall be at least 600 pounds. Working parts, such as cables, pulleys, and shafts, which can be expected to wear, and upon which the lift depends for support of the load, shall have a safety factor of at least six, based on the ultimate strength of the material. Nonworking parts, such as platform, frame, and attachment hardware which would not be expected to wear, shall have a safety factor of at least three, based on the ultimate strength of the material.

(2) *Controls*—(i) *Requirements.* The controls shall be interlocked with the car brakes, propulsion system, or door, or shall provide other appropriate mechanisms or systems, to ensure that the car cannot be moved when the lift is not stowed and so the lift cannot be deployed unless the interlocks or systems are engaged. The lift shall deploy to all platform levels normally encountered in the operating environment. Where provided, each control for deploying, lowering, raising, and stowing the lift and lowering the roll-off barrier shall be of a momentary contact type requiring continuous manual pressure by the operator and shall not allow improper lift sequencing when the lift platform is occupied. The controls shall allow reversal of the lift operation sequence, such as raising or lowering a platform that is part way down, without allowing an occupied platform to fold or retract into the stowed position.

(ii) *Exception.* Where physical or safety constraints prevent the deployment at some stops of a lift having its long dimension perpendicular to the car axis, the transportation entity may specify a lift which is designed to deploy with its long dimension parallel to the car axis and which pivots into or out of the car while occupied (i.e., "rotary lift"). The requirements of paragraph (b)(2)(i) of this section prohibiting the lift from being stowed while occupied shall not apply to a lift design of this type if the stowed position is within the passenger compartment and the lift is intended to be stowed while occupied.

(iii) *Exception.* The brake or propulsion system interlock requirement does not apply to a platform mounted or portable lift provided that a mechanical, electrical or other system operates to ensure that cars do not move when the lift is in use.

(3) *Emergency operation.* The lift shall incorporate an emergency method of deploying, lowering to ground or platform level with a lift occupant, and raising and stowing the empty lift if the power to the lift fails. No emergency method, manual or otherwise, shall be capable of being operated in a manner that could be hazardous to the lift occupant or to the operator when operated according to manufacturer's instructions, and shall not permit the platform to be stowed or folded when occupied, unless the lift is a rotary lift intended to be stowed while occupied.

(4) *Power or equipment failure.* Platforms stowed in a vertical position, and deployed platforms when occupied, shall have provisions to prevent their deploying, falling, or folding any faster than 12 inches/second or their dropping of an occupant in the event of a single failure of any load carrying component.

(5) *Platform barriers.* The lift platform shall be equipped with barriers to prevent any of the wheels of a wheelchair or mobility aid from rolling off the lift during its operation. A movable barrier or inherent design feature shall prevent a wheelchair or mobility aid from rolling off the edge closest to the car until the lift is in its fully raised position. Each side of the lift platform which, in its raised position, extends beyond the car shall have a barrier a minimum 1½ inches high. Such barriers shall not interfere with maneuvering into or out of the car. The loading-edge barrier (outer barrier) which functions as a loading ramp when the lift is at ground or station platform level, shall be sufficient when raised or closed, or a supplementary system shall be provided, to prevent a power wheelchair or mobility aid from riding over or defeating it. The outer barrier of the lift shall automatically rise or close, or a supplementary system shall automatically engage, and remain raised, closed, or engaged at all times that the lift platform is more than 3 inches above the station platform and the lift is occupied. Alternatively, a barrier or system may be raised, lowered, opened, closed, engaged or disengaged by the lift operator provided an interlock or inherent design feature prevents the lift from rising unless the barrier is raised or closed or the supplementary system is engaged.

(6) *Platform surface.* The lift platform surface shall be free of any protrusions over ¼ inch high and shall be slip resistant. The lift platform shall have a minimum clear width of 28½ inches at the platform, a minimum clear width of 30 inches measured from 2 inches above the lift platform surface to 30 inches above the surface, and a minimum clear length of 48 inches measured from 2 inches above the surface of the platform to 30 inches above the surface. (See Fig. 1)

(7) *Platform gaps.* Any openings between the lift platform surface and the raised barriers shall not exceed ⅝ inch wide. When the lift is at car floor height with the inner barrier down (if applicable) or retracted, gaps between the forward lift platform edge and car floor shall not exceed ½ inch horizontally and ⅝ inch vertically. Platforms on semi-automatic lifts may have a hand hold not exceeding 1½ inches by 4½ inches located between the edge barriers.

(8) *Platform entrance ramp.* The entrance ramp, or loading-edge barrier used as a ramp, shall not exceed a slope of 1:8, when measured on level ground, for a maximum rise of 3 inches, and the transition from station platform to ramp may be vertical without edge treatment up to ¼ inch. Thresholds between ¼ inch and ½ inch high shall be beveled with a slope no greater than 1:2.

(9) *Platform deflection.* The lift platform (not including the entrance ramp) shall not deflect more than 3 degrees (exclusive of vehicle roll) in any direction between its unloaded position and its position when loaded with 600 pounds applied through a 26 inch by 26 inch test pallet at the centroid of the lift platform.

(10) *Platform movement.* No part of the platform shall move at a rate exceeding 6 inches/second during lowering and lifting an occupant, and shall not exceed 12 inches/second during deploying or stowing. This requirement does not apply to the deployment or stowage cycles of lifts that are manually deployed or stowed. The maximum platform horizontal and vertical acceleration when occupied shall be 0.3g.

(11) *Boarding direction.* The lift shall permit both inboard and outboard facing of wheelchairs and mobility aids.

(12) *Use by standees.* Lifts shall accommodate persons using walkers, crutches, canes or braces or who otherwise have difficulty using steps. The lift may be marked to indicate a preferred standing position.

(13) *Handrails.* Platforms on lifts shall be equipped with handrails, on two sides, which move in tandem with the lift which shall be graspable and provide support to standees throughout the entire lift operation. Handrails shall have a usable component at least 8 inches long with the lowest portion a

minimum 30 inches above the platform and the highest portion a maximum 38 inches above the platform. The handrails shall be capable of withstanding a force of 100 pounds concentrated at any point on the handrail without permanent deformation of the rail or its supporting structure. The handrail shall have a cross-sectional diameter between 1¼ inches and 1½ inches or shall provide an equivalent grasping surface, and have eased edges with corner radii of not less than ⅛ inch. Handrails shall be placed to provide a minimum 1½ inches knuckle clearance from the nearest adjacent surface. Handrails shall not interfere with wheelchair or mobility aid maneuverability when entering or leaving the car.

(c) *Car ramp or bridge plate*—(1) *Design load.* Ramps or bridge plates 30 inches or longer shall support a load of 600 pounds, placed at the centroid of the ramp or bridge plate distributed over an area of 26 inches by 26 inches, with a safety factor of at least 3 based on the ultimate strength of the material. Ramps or bridge plates shorter than 30 inches shall support a load of 300 pounds.

(2) *Ramp surface.* The ramp or bridge plate surface shall be continuous and slip resistant, shall not have protrusions from the surface greater than ¼ inch high, shall have a clear width of 30 inches and shall accommodate both four-wheel and three-wheel mobility aids.

(3) *Ramp threshold.* The transition from station platform to the ramp or bridge plate and the transition from car floor to the ramp or bridge plate may be vertical without edge treatment up to ¼ inch. Changes in level between ¼ inch and ½ inch shall be beveled with a slope no greater than 1:2.

(4) *Ramp barriers.* Each side of the ramp or bridge plate shall have barriers at least 2 inches high to prevent mobility aid wheels from slipping off.

(5) *Slope.* Ramps or bridge plates shall have the least slope practicable. If the height of the vehicle floor, under 50% passenger load, from which the ramp is deployed is 3 inches or less above the station platform a maximum slope of 1:4 is permitted; if the height of the vehicle floor, under 50% passenger load, from which the ramp is deployed is 6 inches or less, but more than 3 inches, above the station platform a maximum slope of 1:6 is permitted; if the height of the vehicle floor, under 50% passenger load, from which the ramp is deployed is 9 inches or less, but more than 6 inches, above the station platform a maximum slope of 1:8 is permitted; if the height of the vehicle floor, under 50% passenger load, from which the ramp is deployed is greater than 9 inches above the station platform a slope of 1:12 shall be achieved. Folding or telescoping ramps are permitted provided they meet all structural requirements of this section.

(6) *Attachment*—(i) *Requirement.* When in use for boarding or a lighting, the ramp or bridge plate shall be attached to the vehicle, or otherwise prevented from moving such that it is not subject to displacement when loading or unloading a heavy power mobility aid and that any gaps between vehicle and ramp or bridge plates, and station platform and ramp or bridge plate, shall not exceed ⅝ inch.

(ii) *Exception.* Ramps or bridge plates which are attached to, and deployed from, station platforms are permitted in lieu of car devices provided they meet the displacement requirements of paragraph (c)(6)(i) of this section.

(7) *Stowage.* A compartment, securement system, or other appropriate method shall be provided to ensure that stowed ramps or bridge plates, including portable ramps or bridge plates stowed in the passenger area, do not impinge on a passenger's wheelchair or mobility aid or pose any hazard to passengers in the event of a sudden stop.

(8) *Handrails.* If provided, handrails shall allow persons with disabilities to grasp them from outside the car while starting to board, and to continue to use them throughout the boarding process, and shall have the top between 30 inches and 38 inches above the ramp surface. The handrails shall be capable of withstanding a force of 100 pounds concentrated at any point on the handrail without permanent deformation of the rail or its supporting structure. The handrail shall have a cross-sectional diameter between 1¼ inches and 1½ inches or shall provide an equivalent grasping surface, and have eased edges with corner radii of not less than ⅛ inch. Handrails shall not interfere with wheelchair or mobility aid maneuverability when entering or leaving the car.

(d) *Mobility aid seating location.* Spaces for persons who wish to remain in their wheelchairs or mobility aids shall have a minimum clear floor space 48 inches by 30 inches. Such spaces shall adjoin, and may overlap, an accessible path. Not more than 6 inches of the required clear floor space may be accommodated for footrests under another seat provided there is a minimum of 9 inches from the floor to the lowest part of the seat overhanging the space. Seating spaces may have fold-down or removable seats to accommodate other passengers when a wheelchair or mobility aid user is not occupying the area, provided the seats, when folded up, do not obstruct the clear floor space required. (See Fig. 2)

§ 1192.97 Interior circulation, handrails and stanchions.

(a) Where provided, handrails or stanchions within the passenger compartment shall be placed to permit sufficient turning and maneuvering space for wheelchairs and other mobility aids to reach a seating location, complying with § 1192.95(d), from an accessible entrance. The diameter or width of the gripping surface of interior handrails and stanchions shall be 1¼ inches to 1½ inches or shall provide an equivalent gripping surface. Handrails shall be placed to provide a minimum 1½ inches knuckle clearance from the nearest adjacent surface.

(b) Where provided, handrails or stanchions shall be sufficient to permit safe boarding, on-board circulation, seating and standing assistance, and alighting by persons with disabilities.

(c) At entrances equipped with steps, handrails or stanchions shall be provided in the entrance to the car in a configuration which allows passengers to grasp such assists from outside the car while starting to board, and to continue using such assists throughout the boarding process, to the extent permitted by 49 CFR part 231.

§ 1192.99 Floors, steps and thresholds.

(a) Floor surfaces on aisles, step treads, places for standees, and areas where wheelchair and mobility aid users are to be accommodated shall be slip-resistant.

(b) All thresholds and step edges shall have a band of color(s) running the full width of the step or threshold which contrasts from the step tread and riser or adjacent floor, either light-on-dark or dark-on-light.

§ 1192.101 Lighting.

(a) Any stepwell or doorway with a lift, ramp or bridge plate shall have, when the door is open, at least 2 footcandles of illumination measured on the step tread, ramp, bridge plate, or lift platform.

(b) The doorways of cars not operating at lighted station platforms shall have outside lights which, when the door is open, provide at least 1 footcandle of illumination on the station platform surface for a distance of 3 feet perpendicular to all points on the bottom step tread edge. Such lights shall be shielded to protect the eyes of entering and exiting passengers.

§ 1192.103 Public information system.

(a) Each car shall be equipped with an interior public address system

permitting transportation system personnel, or recorded or digitized human speech messages, to announce stations and provide other passenger information. Alternative systems or devices which provide equivalent access are also permitted.

(b) [Reserved].

§ 1192.105 Priority seating signs.

(a) Each car shall contain sign(s) which indicate that certain seats are priority seats for persons with disabilities and that other passengers should make such seats available to those who wish to use them.

(b) Characters on signs required by paragraph (a) shall have a width-to-height ratio between 3:5 and 1:1 and a stroke width-to-height ratio between 1:5 and 1:10, with a minimum character height (using an upper case "X") of ⅝ inch, with "wide" spacing (generally, the space between letters shall be 1/16 the height of upper case letters), and shall contrast with the background either light-on-dark or dark-on-light.

§ 1192.107 Restrooms.

(a) If a restroom is provided for the general public, it shall be designed so as to allow a person using a wheelchair or mobility aid to enter and use such restroom as specified in paragraphs (a)(1) through (5) of this section.

(1) The minimum clear floor area shall be 35 inches by 60 inches. Permanently installed fixtures may overlap this area a maximum of 6 inches, if the lowest portion of the fixture is a minimum of 9 inches above the floor, and may overlap a maximum of 19 inches, if the lowest portion of the fixture is a minimum of 29 inches above the floor, provided such fixtures do not interfere with access to the water closet. Fold-down or retractable seats or shelves may overlap the clear floor space at a lower height provided they can be easily folded up or moved out of the way.

(2) The height of the water closet shall be 17 inches to 19 inches measured to the top of the toilet seat. Seats shall not be sprung to return to a lifted position.

(3) A grab bar at least 24 inches long shall be mounted behind the water closet, and a horizontal grab bar at least 40 inches long shall be mounted on at least one side wall, with one end not more than 12 inches from the back wall, at a height between 33 inches and 36 inches above the floor.

(4) Faucets and flush controls shall be operable with one hand and shall not require tight grasping, pinching, or twisting of the wrist. The force required to activate controls shall be no greater than 5 lbf (22.2 N). Controls for flush valves shall be mounted no more than 44 inches above the floor.

(5) Doorways on the end of the enclosure, opposite the water closet, shall have a minimum clear opening width of 32 inches. Doorways on the side wall shall have a minimum clear opening width of 39 inches. Door latches and hardware shall be operable with one hand and shall not require tight grasping, pinching, or twisting of the wrist.

(b) Restrooms required to be accessible shall be in close proximity to at least one seating location for persons using mobility aids and shall be connected to such a space by an unobstructed path having a minimum width of 32 inches.

§ 1192.109 Between-car barriers.

Where vehicles operate in a high-platform, level-boarding mode, and where between-car bellows are not provided, devices or systems shall be provided to prevent, deter or warn individuals from inadvertently stepping off the platform between cars. Appropriate devices include, but are not limited to, pantograph gates, chains, motion detectors or other suitable devices.

Subpart F—Intercity Rail Cars and Systems

§ 1192.111 General.

(a) New, used and remanufactured intercity rail cars, to be considered accessible by regulations issued by the Department of Transportation in 49 CFR part 37, shall comply with this subpart to the extent required for each type of car as specified below.

(1) Single-level rail passenger coaches and food service cars (other than single-level dining cars) shall comply with §§ 1192.113 through 1192.123. Compliance with § 1192.125 shall be required only to the extent necessary to meet the requirements of paragraph (d) of this section.

(2) Single-level dining and lounge cars shall have at least one connecting doorway complying with § 1192.113(a)(2), connected to a car accessible to persons using wheelchairs or mobility aids, and at least one space complying with § 1192.125(d) (2) and (3), to provide table service to a person who wishes to remain in his or her wheelchair, and space to fold and store a wheelchair for a person who wishes to transfer to an existing seat.

(3) Bi-level dining cars shall comply with §§ 1192.113(a)(2), 1192.115(b), 1192.117(a), and 1192.121.

(4) Bi-level lounge cars shall have doors on the lower level, on each side of the car from which passengers board, complying with § 1192.113, a restroom complying with § 1192.123, and at least one space complying with § 1192.125(d) (2) and (3) to provide table service to a person who wishes to remain in his or her wheelchair and space to fold and store a wheelchair for a person who wishes to transfer to an existing seat.

(5) Restrooms complying with § 1192.123 shall be provided in single-level rail passenger coaches and food service cars adjacent to the accessible seating locations required by paragraph (d) of this section. Accessible restrooms are required in dining and lounge cars only if restrooms are provided for other passengers.

(6) Sleeper cars shall comply with §§ 1192.113 (b) through (d), 1192.115 through 1192.121, and 1192.125, and have at least one compartment which can be entered and used by a person using a wheelchair or mobility aid and complying with § 1192.127.

(b)(1) If physically and operationally practicable, intercity rail cars shall comply with § 1192.113(d) for level boarding.

(2) Where level boarding is not structurally or operationally practicable, intercity rail cars shall comply with § 1192.125.

(c) If portions of the car are modified in a way that affects or could affect accessibility, each such portion shall comply, to the extent practicable, with the applicable provisions of this subpart. This provision does not require that inaccessible cars be retrofitted with lifts, ramps or other boarding devices.

(d) Passenger coaches or food service cars shall have the number of spaces complying with § 1192.125(d)(2) and the number of spaces complying with § 1192.125(d)(3), as required by 49 CFR 37.91.

(e) Existing cars retrofitted to meet the seating requirements of 49 CFR 37.91 shall comply with §§ 1192.113(e), 1192.123, 1192.125(d) and shall have at least one door on each side from which passengers board complying with § 1192.113(d). Existing cars designed and manufactured to be accessible in accordance with Department of Transportation regulations implementing section 504 of the Rehabilitation Act of 1973 that were in effect before October 7,1991, shall comply with § 1192.125(a).

§ 1192.113 Doorways.

(a) *Clear width.* (1) At least one doorway, on each side of the car from which passengers board, of each car required to be accessible by § 1192.111(a) and where the spaces

required by § 1192.111(d) are located, and at least one adjacent doorway into coach passenger compartments shall have a minimum clear opening width of 32 inches.

(2) Doorways at ends of cars connecting two adjacent cars, to the maximum extent practicable in accordance with regulations issued under the Federal Railroad Safety Act of 1970 (49 CFR parts 229 and 231), shall have a clear opening width of 32 inches to permit wheelchair and mobility aid users to enter into a single-level dining car, if available.

(b) *Passaway.* Doorways required to be accessible by paragraph (a) of this section shall permit access by persons using mobility aids and shall have an unobstructed passageway at least 32 inches wide leading to an accessible sleeping compartment complying with § 1192.127 or seating locations complying with § 1192.125(d). In cars where such doorways require passage through a vestibule, such vestibule shall have a minimum width of 42 inches. (see Fig. 4)

(c) *Signals.* If doors to the platform close automatically or from a remote location, auditory and visual warning signals shall be provided to alert passengers of closing doors.

(d) *Coordination with boarding platforms*—(1) *Requirements.* Cars which provide level-boarding in stations with high platforms shall be coordinated with the boarding platform or mini-high platform design such that the horizontal gap between a car at rest and the platform shall be no greater than 3 inches and the height of the car floor shall be within plus or minus ⅝ inch of the platform height. Vertical alignment may be accomplished by car air suspension, platform lifts or other devices, or any combination.

(2) *Exception.* New cars operating in existing stations may have a floor height within plus or minus 1½ inches of the platform height.

(3) *Exception.* Where platform set-backs do not allow the horizontal gap or vertical alignment specified in paragraph (d) (1) or (2), platform or portable lifts complying with § 1192.125(b), or car or platform bridge plates, complying with § 1192.125(c), may be provided.

(4) *Exception.* Retrofitted vehicles shall be coordinated with the platform in existing stations such that the horizontal gap shall be no greater than 4 inches and the height of the vehicle floor, under 50% passenger load, shall be within plus or minus 2 inches of the platform height.

(e) *Signage.* The International Symbol of Accessibility shall be displayed on the exterior of all doors complying with this section unless all cars and doors are accessible and are not marked by the access symbol (see Fig. 6). Appropriate signage shall also indicate which accessible doors are adjacent to an accessible restroom, if applicable.

§ 1192.115 Interior circulation, handrails and stanchions.

(a) Where provided, handrails or stanchions within the passenger compartment shall be placed to permit sufficient turning and maneuvering space for wheelchairs and other mobility aids to reach a seating location, complying with § 1192.125(d), from an accessible entrance. The diameter or width of the gripping surface of interior handrails and stanchions shall be 1¼ inches to 1½ inches or shall provide an equivalent gripping surface. Handrails shall be placed to provide a minimum 1½ inches knuckle clearance from the nearest adjacent surface.

(b) Where provided, handrails and stanchions shall be sufficient to permit safe boarding, on-board circulation, seating and standing assistance, and alighting by persons with disabilities.

(c) At entrances equipped with steps, handrails or stanchions shall be provided in the entrance to the car in a configuration which allows passengers to grasp such assists from outside the car while starting to board, and to continue using such assists throughout the boarding process, to the extent permitted by 49 CFR part 231.

§ 1192.117 Floors, steps and thresholds.

(a) Floor surfaces on aisles, step treads and areas where wheelchair and mobility aid users are to be accommodated shall be slip-resistant.

(b) All step edges and thresholds shall have a band of color(s) running the full width of the step or threshold which contrasts from the step tread and riser or adjacent floor, either light-on-dark or dark-on-light.

§ 1192.119 Lighting.

(a) Any stepwell, or doorway with a lift, ramp or bridge plate, shall have, when the door is open, at least 2 footcandles of illumination measured on the step tread, ramp, bridge plate or lift platform.

(b) The doorways of cars not operating at lighted station platforms shall have outside lights which, when the door is open, provide at least 1 footcandle of illumination on the station platform surface for a distance of 3 feet perpendicular to all points on the bottom step tread edge. Such lights shall be shielded to protect the eyes of entering and exiting passengers.

§ 1192.121 Public information system.

(a) Each car shall be equipped with a public address system permitting transportation system personnel, or recorded or digitized human speech messages, to announce stations and provide other passenger information. Alternative systems or devices which provide equivalent access are also permitted.

(b) [Reserved]

§ 1192.123 Restrooms.

(a) If a restroom is provided for the general public, and an accessible restroom is required by § 1192.111 (a) and (e), it shall be designed so as to allow a person using a wheelchair or mobility aid to enter and use such restroom as specified in paragraphs (a) (1) through (5) of this section.

(1) The minimum clear floor area shall be 35 inches by 60 inches. Permanently installed fixtures may overlap this area a maximum of 6 inches, if the lowest portion of the fixture is a minimum of 9 inches above the floor, and may overlap a maximum of 19 inches, if the lowest portion of the fixture is a minimum of 29 inches above the floor. Fixtures shall not interfere with access to and use of the water closet. Fold-down or retractable seats or shelves may overlap the clear floor space at a lower height provided they can be easily folded up or moved out of the way.

(2) The height of the water closet shall be 17 inches to 19 inches measured to the top of the toilet seat. Seats shall not be sprung to return to a lifted position.

(3) A grab bar at least 24 inches long shall be mounted behind the water closet, and a horizontal grab bar at least 40 inches long shall be mounted on at least one side wall, with one end not more than 12 inches from the back wall, at a height between 33 inches and 36 inches above the floor.

(4) Faucets and flush controls shall be operable with one hand and shall not require tight grasping, pinching, or twisting of the wrist. The force required to activate controls shall be no greater than 5 lbf (22.2 N). Controls for flush valves shall be mounted no more than 44 inches above the floor.

(5) Doorways on the end of the enclosure, opposite the water closet, shall have a minimum clear opening width of 32 inches. Doorways on the side wall shall have a minimum clear opening width of 39 inches. Door latches and hardware shall be operable with one hand and shall not require tight grasping, pinching, or twisting of the wrist.

(b) Restrooms required to be accessible shall be in close proximity to

at least one seating location for persons using mobility aids complying with § 1192.125(d) and shall be connected to such a space by an unobstructed path having a minimum width of 32 inches.

§ 1192.125 Mobility aid accessibility.

(a)(1) *General.* All intercity rail cars, other than level entry cars, required to be accessible by §§ 1192.111 (a) and (e) of this subpart shall provide a level-change mechanism or boarding device (e.g., lift, ramp or bridge plate) complying with either paragraph (b) or (c) of this section and sufficient clearances to permit a wheelchair or other mobility aid user to reach a seating location complying with paragraph (d) of this section.

(2) *Exception.* If portable or platform lifts, ramps or bridge plates meeting the applicable requirements of this section are provided on station platforms or other stops, or mini-high platforms complying with § 1192.113(d) are provided, at stations or stops required to be accessible by 49 CFR part 37, the car is not required to be equipped with a car-borne device.

(b) *Car Lift*—(1) *Design load.* The design load of the lift shall be at least 600 pounds. Working parts, such as cables, pulleys, and shafts, which can be expected to wear, and upon which the lift depends for support of the load, shall have a safety factor of at least six, based on the ultimate strength of the material. Nonworking parts, such as platform, frame, and attachment hardware which would not be expected to wear, shall have a safety factor of at least three, based on the ultimate strength of the material.

(2) *Controls*—(i) *Requirements.* The controls shall be interlocked with the car brakes, propulsion system, or door, or shall provide other appropriate mechanisms or systems, to ensure that the car cannot be moved when the lift is not stowed and so the lift cannot be deployed unless the interlocks or systems are engaged. The lift shall deploy to all platform levels normally encountered in the operating environment. Where provided, each control for deploying, lowering, raising, and stowing the lift and lowering the roll-off barrier shall be of a momentary contact type requiring continuous manual pressure by the operator and shall not allow improper lift sequencing when the lift platform is occupied. The controls shall allow reversal of the lift operation sequence, such as raising or lowering a platform that is part way down, without allowing an occupied platform to fold or retract into the stowed position.

(ii) *Exception.* Where physical or safety constraints prevent the deployment at some stops of a lift having its long dimension perpendicular to the car axis, the transportation entity may specify a lift which is designed to deploy with its long dimension parallel to the car axis and which pivots into or out of the car while occupied (i.e., "rotary lift"). The requirements of paragraph (b)(2)(i) of this section prohibiting the lift from being stowed while occupied shall not apply to a lift design of this type if the stowed position is within the passenger compartment and the lift is intended to be stowed while occupied.

(iii) *Exception.* The brake or propulsion system interlocks requirement does not apply to platform mounted or portable lifts provided that a mechanical, electrical or other system operates to ensure that cars do not move when the lift is in use.

(3) *Emergency operation.* The lift shall incorporate an emergency method of deploying, lowering to ground or station platform level with a lift occupant, and raising and stowing the empty lift if the power to the lift fails. No emergency method, manual or otherwise, shall be capable of being operated in a manner that could be hazardous to the lift occupant or to the operator when operated according to manufacturer's instructions, and shall not permit the platform to be stowed or folded when occupied, unless the lift is a rotary lift and is intended to be stowed while occupied.

(4) *Power or equipment failure.* Platforms stowed in a vertical position, and deployed platforms when occupied, shall have provisions to prevent their deploying, failing, or folding any faster than 12 inches/second or their dropping of an occupant in the event of a single failure of any load carrying component.

(5) *Platform barriers.* The lift platform shall be equipped with barriers to prevent any of the wheels of a wheelchair or mobility aid from rolling off the lift during its operation. A movable barrier or inherent design feature shall prevent a wheelchair or mobility aid from rolling off the edge closest to the car until the lift is in its fully raised position. Each side of the lift platform which, in its raised position, extends beyond the car shall have a barrier a minimum 1½ inches high. Such barriers shall not interfere with maneuvering into or out of the car. The loading-edge barrier (outer barrier) which functions as a loading ramp when the lift is at ground or station platform level, shall be sufficient when raised or closed, or a supplementary system shall be provided, to prevent a power wheelchair or mobility aid from riding over or defeating it. The outer barrier of the lift shall automatically rise or close, or a supplementary system shall automatically engage, and remain raised, closed, or engaged at all times that the lift platform is more than 3 inches above the station platform and the lift is occupied. Alternatively, a barrier or system may be raised, lowered, opened, closed, engaged or disengaged by the lift operator provided an interlock or inherent design feature prevents the lift from rising unless the barrier is raised or closed or the supplementary system is engaged.

(6) *Platform surface.* The lift platform surface shall be free of any protrusions over ¼ inch high and shall be slip resistant. The lift platform shall have a minimum clear width of 28½ inches at the platform, a minimum clear width of 30 inches measured from 2 inches above the lift platform surface to 30 inches above the surface, and a minimum clear length of 48 inches measured from 2 inches above the surface of the platform to 30 inches above the surface. (See Fig. 1.)

(7) *Platform gaps.* Any openings between the lift platform surface and the raised barriers shall not exceed ⅝ inch wide. When the lift is at car floor height with the inner barrier (if applicable) down or retracted, gaps between the forward lift platform edge and car floor shall not exceed ½ inch horizontally and ⅝ inch vertically. Platforms on semi-automatic lifts may have a hand hold not exceeding 1½ inches by 4½ inches located between the edge barriers.

(8) *Platform entrance ramp.* The entrance ramp, or loading-edge barrier used as a ramp, shall not exceed a slope of 1:8, when measured on level ground, for a maximum rise of 3 inches, and the transition from station platform to ramp may be vertical without edge treatment up to ¼ inch. Thresholds between ¼ inch and ½ inch high shall be beveled with a slope no greater than 1:2.

(9) *Platform deflection.* The lift platform (not including the entrance ramp) shall not deflect more than 3 degrees (exclusive of car roll) in any direction between its unloaded position and its position when loaded with 600 pounds applied through a 26 inch by 26 inch test pallet at the centroid of the lift platform.

(10) *Platform movement.* No part of the platform shall move at a rate exceeding 6 inches/second during lowering and lifting an occupant, and shall not exceed 12 inches/second during deploying or stowing. This

requirement does not apply to the deployment or stowage cycles of lifts that are manually deployed or stowed. The maximum platform horizontal and vertical acceleration when occupied shall be 0.3g.

(11) *Boarding direction.* The lift shall permit both inboard and outboard facing of wheelchairs and mobility aids.

(12) *Use by standees.* Lifts shall accommodate persons using walkers, crutches, canes or braces or who otherwise have difficulty using steps. The lift may be marked to indicate a preferred standing position.

(13) *Handrails.* Platforms on lifts shall be equipped with handrails, on two sides, which move in tandem with the lift, and which shall be graspable and provide support to standees throughout the entire lift operation. Handrails shall have a usable component at least 8 inches long with the lowest portion a minimum 30 inches above the platform and the highest portion a maximum 38 inches above the platform. The handrails shall be capable of withstanding a force of 100 pounds concentrated at any point on the handrail without permanent deformation of the rail or its supporting structure. The handrail shall have a cross-sectional diameter between 1¼ inches and 1½ inches or shall provide an equivalent grasping surface, and have eased edges with corner radii of not less than ⅛ inch. Handrails shall be placed to provide a minimum 1½ inches knuckle clearance from the nearest adjacent surface. Handrails shall not interfere with wheelchair or mobility aid maneuverability when entering or leaving the car.

(c) *Car ramp or bridge plate*—(1) *Design load.* Ramps or bridge plates 30 inches or longer shall support a load of 600 pounds, placed at the centroid of the ramp or bridge plate distributed over an area of 26 inches by 26 inches, with a safety factor of at least 3 based on the ultimate strength of the material. Ramps or bridge plates shorter than 30 inches shall support a load of 300 pounds.

(2) *Ramp surface.* The ramp or bridge plate surface shall be continuous and slip resistant, shall not have protrusions from the surface greater than ¼ inch high, shall have a clear width of 30 inches and shall accommodate both four-wheel and three-wheel mobility aids.

(3) *Ramp threshold.* The transition from station platform to the ramp or bridge plate and the transition from car floor to the ramp or bridge plate may be vertical without edge treatment up to ¼ inch. Changes in level between ¼ inch and ½ inch shall be beveled with a slope no greater than 1:2.

(4) *Ramp barriers.* Each side of the ramp or bridge plate shall have barriers at least 2 inches high to prevent mobility aid wheels from slipping off.

(5) *Slope.* Ramps or bridge plates shall have the least slope practicable. If the height of the vehicle floor, under 50% passenger load, from which the ramp is deployed is 3 inches or less above the station platform a maximum slope of 1:4 is permitted; if the height of the vehicle floor, under 50% passenger load, from which the ramp is deployed is 6 inches or less, but more than 3 inches, above the station platform a maximum slope of 1:6 is permitted; if the height of the vehicle floor, under 50% passenger load, from which the ramp is deployed is 9 inches or less, but more than 6 inches, above the station platform a maximum slope of 1:8 is permitted; if the height of the vehicle floor, under 50% passenger load, from which the ramp is deployed is greater than 9 inches above the station platform a slope of 1:12 shall be achieved. Folding or telescoping ramps are permitted provided they meet all structural requirements of this section.

(6) *Attachment*—(i) *Requirement.* When in use for boarding or alighting, the ramp or bridge plate shall be attached to the vehicle, or otherwise prevented from moving such that it is not subject to displacement when loading or unloading a heavy power mobility aid and that any gaps between vehicle and ramp or bridge plate, and station platform and ramp or bridge plate, shall not exceed ⅝ inch.

(ii) *Exception.* Ramps or bridge plates which are attached to, and deployed from, station platforms are permitted in lieu of car devices provided they meet the displacement requirements of paragraph (c)(6)(i) of this section.

(7) *Stowage.* A compartment, securement system, or other appropriate method shall be provided to ensure that stowed ramps or bridge plates, including portable ramps or bridge plates stowed in the passenger area, do not impinge on a passenger's wheelchair or mobility aid or pose any hazard to passengers in the event of a sudden stop.

(8) *Handrails.* If provided, handrails shall allow persons with disabilities to grasp them from outside the car while starting to board, and to continue to use them throughout the boarding process, and shall have the top between 30 inches and 38 inches above the ramp surface. The handrails shall be capable of withstanding a force of 100 pounds concentrated at any point on the handrail without permanent deformation of the rail or its supporting structure. The handrail shall have a cross-sectional diameter between 1¼ inches and 1½ inches or shall provide an equivalent grasping surface, and have eased edges with corner radii of not less than ⅛ inch. Handrails shall not interfere with wheelchair or mobility aid maneuverability when entering or leaving the car.

(d) *Seating*—(1) *Requirements.* All intercity rail cars required to be accessible by § 1192.111 (a) and (e) of this subpart shall provide at least one, but not more than two, mobility aid seating location(s) complying with paragraph (d)(2) of this section; and at least one, but not more than two, seating location(s) complying with paragraph (d)(3) of this section which adjoin or overlap an accessible route with a minimum clear width of 32 inches.

(2) *Wheelchair or mobility aid spaces.* Spaces for persons who wish to remain in their wheelchairs or mobility aids shall have a minimum clear floor area 48 inches by 30 inches. Such space may have fold-down or removable seats for use when not occupied by a wheelchair or mobility aid user. (See Fig. 2)

(3) *Other spaces.* Spaces for individuals who wish to transfer shall include a regular coach seat or dining car booth or table seat and space to fold and store the passenger's wheelchair.

§ 1192.127 Sleeping compartments.

(a) Sleeping compartments required to be accessible shall be designed so as to allow a person using a wheelchair or mobility aid to enter, maneuver within and approach and use each element within such compartment. (See Fig. 5.)

(b) Each accessible compartment shall contain a restroom complying with § 1192.123(a) which can be entered directly from such compartment.

(c) Controls and operating mechanisms (e.g., heating and air conditioning controls, lighting controls, call buttons, electrical outlets, etc.) shall be mounted no more than 48 inches, and no less than 15 inches, above the floor and shall have a clear floor area directly in front a minimum of 30 inches by 48 inches. Controls and operating mechanisms shall be operable with one hand and shall not require tight grasping, pinching, or twisting of the wrist.

Subpart G—Over-the-Road Buses and Systems

§ 1192.151 General.

(a) New, used and remanufactured over-the-road buses, to be considered accessible by regulations issued by the Department of Transportation in 49 CFR part 37, shall comply with this subpart.

(b) Over-the-road buses covered by 49 CFR 37.7(c) shall comply with § 1192.23 and this subpart.

§ 1192.153 Doors, steps and thresholds.

(a) Floor surfaces on aisles, step treads and areas where wheelchair and mobility aid users are to be accommodated shall be slip-resistant.

(b) All step edges shall have a band of color(s) running the full width of the step which contrasts from the step tread and riser, either dark-on-light or light-on-dark.

(c) To the maximum extent practicable, doors shall have a minimum clear width when open of 30 inches, but in no case less than 27 inches.

§ 1192.155 Interior circulation, handrails and stanchions.

(a) Handrails and stanchions shall be provided in the entrance to the vehicle in a configuration which allows passengers to grasp such assists from outside the vehicle while starting to board, and to continue using such handrails or stanchions throughout the boarding process. Handrails shall have a cross-sectional diameter between 1¼ inches and 1½ inches or shall provide an equivalent grasping surface, and have eased edges with corner radii of not less than ⅛ inch. Handrails shall be placed to provide a minimum 1½ inches knuckle clearance from the nearest adjacent surface. Where on-board fare collection devices are used, a horizontal passenger assist shall be located between boarding passengers and the fare collection device and shall prevent passengers from sustaining injuries on the fare collection device or windshield in the event of a sudden deceleration. Without restricting the vestibule space, the assist shall provide support for a boarding passenger from the door through the boarding procedure. Passengers shall be able to lean against the assist for security while paying fares.

(b) Where provided within passenger compartments, handrails or stanchions shall be sufficient to permit safe on-board circulation, seating and standing assistance, and alighting by persons with disabilities.

§ 1192.157 Lighting.

(a) Any stepwell or doorway immediately adjacent to the driver shall have, when the door is open, at least 2 foot-candles of illumination measured on the step tread.

(b) The vehicle doorway shall have outside light(s) which, when the door is open, provide at least 1 foot-candle of illumination on the street surface for a distance of 3 feet perpendicular to all points on the bottom step tread outer edge. Such light(s) shall be located below window level and shielded to protect the eyes of entering and exiting passengers.

§ 1192.159 Mobility aid accessibility. [Reserved]

Subpart H—Other Vehicles and Systems

§ 1192.171 General.

(a) New, used and remanufactured vehicles and conveyances for systems not covered by other subparts of this part, to be considered accessible by regulations issued by the Department of Transportation in 49 CFR part 37, shall comply with this subpart.

(b) If portions of the vehicle or conveyance are modified in a way that affects or could affect accessibility, each such portion shall comply, to the extent practicable, with the applicable provisions of this subpart. This provision does not require that inaccessible vehicles be retrofitted with lifts, ramps or other boarding devices.

(c) Requirements for vehicles and systems not covered by this part shall be determined on a case-by-case basis by the Department of Transportation in consultation with the U.S. Architectural and Transportation Barriers Compliance Board (Access Board).

§ 1192.173 Automated guideway transit vehicles and systems.

(a) Automated Guideway Transit (AGT) vehicles and systems, sometimes called "people movers", operated in airports and other areas where AGT vehicles travel at slow speed, shall comply with the provisions of §§ 1192.53 (a) through (c), and 1192.55 through 1192.61 for rapid rail vehicles and systems.

(b) Where the vehicle covered by paragraph (a) of this section will operate in an accessible station, the design of vehicles shall be coordinated with the boarding platform design such that the horizontal gap between a vehicle door at rest and the platform shall be no greater than 1 inch and the height of the vehicle floor shall be within plus or minus ½ inch of the platform height under all normal passenger load conditions. Vertical alignment may be accomplished by vehicle air suspension or other suitable means of meeting the requirement.

(c) In stations where open platforms are not protected by platform screens, a suitable device or system shall be provided to prevent, deter or warn individuals from stepping off the platform between cars. Acceptable devices include, but are not limited to, pantograph gates, chains, motion detectors or other appropriate devices.

(d) Light rail and rapid rail AGT vehicles and systems shall comply with subparts D and C of this part, respectively.

§ 1192.175 High-speed rail cars, monorails and systems.

(a) All cars for high-speed rail systems, including but not limited to those using "maglev" or high speed steel-wheel-on-steel-rail technology, and monorail systems operating primarily on dedicated rail (i.e., not used by freight trains) or guideway, in which stations are constructed in accordance with subpart C of 49 CFR part 37, shall be designed for high-platform, level boarding and shall comply with § 1192.111(a) for each type of car which is similar to intercity rail, §§ 1192.111(d), 1192.113 (a) through (c) and (e), 1192.115 (a) and (b), 1192.117 (a) and (b), 1192.121 through 1192.123, 1192.125(d), and 1192.127 (if applicable). The design of cars shall be coordinated with the boarding platform design such that the horizontal gap between a car door at rest and the platform shall be no greater than 3 inches and the height of the car floor shall be within plus or minus ⅝ inch of the platform height under all normal passenger load conditions. Vertical alignment may be accomplished by car air suspension or other suitable means of meeting the requirement. All doorways shall have, when the door is open, at least 2 foot-candles of illumination measured on the door threshold.

(b) All other high-speed rail cars shall comply with the similar provisions of subpart F of this part.

§ 1192.177 Ferries, excursion boats and other vessels. [Reserved]

§ 1192.179 Trams, similar vehicles and systems.

(a) New and used trams consisting of a tractor unit, with or without passenger accommodations, and one or more passenger trailer units, including but not limited to vehicles providing shuttle service to remote parking areas, between hotels and other public accommodations, and between and within amusement parks and other recreation areas, shall comply with this section. For purposes of determining applicability of 49 CFR 37.101, 37.103, or 37.105, the capacity of such a vehicle or "train" shall consist of the total combined seating capacity of all units, plus the driver, prior to any modification for accessibility.

(b) Each tractor unit which accommodates passengers and each

trailer unit shall comply with §§ 1192.25 and 1192.29. In addition, each such unit shall comply with § 1192.23 (b) or (c) and shall provide at least one space for wheelchair or mobility aid users complying with § 1192.23(d) unless the complete operating unit consisting of tractor and one or more trailers can already accommodate at least two wheelchair or mobility aid users.

BILLING CODE 8150-01-M

Figures in Part 1192

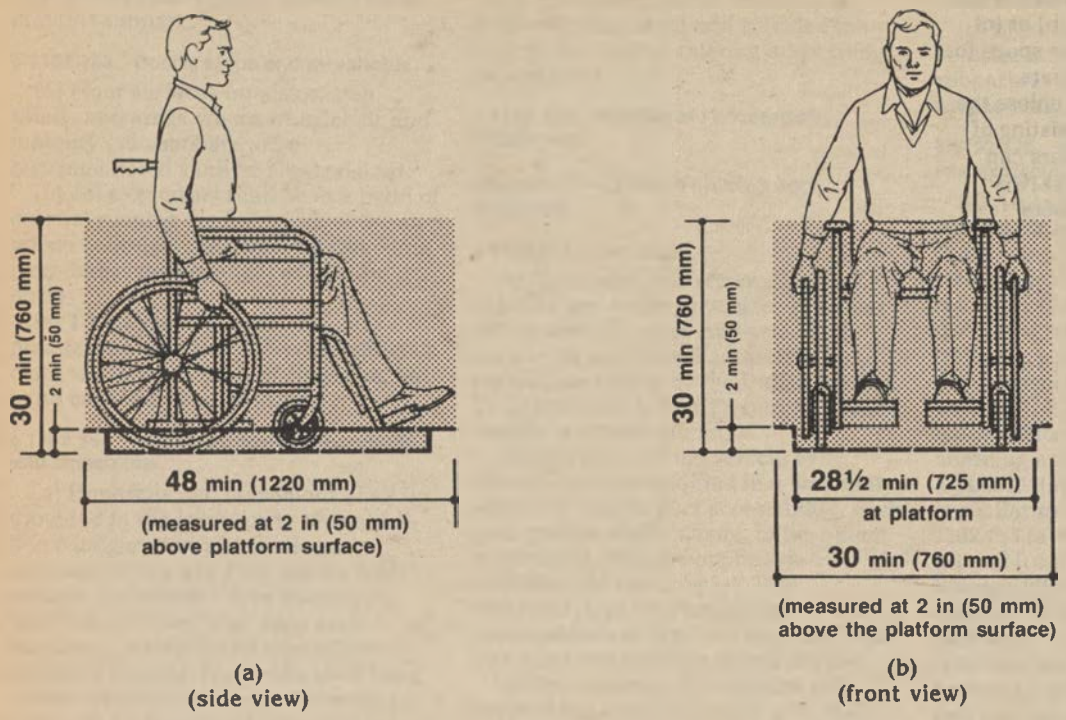

Fig. 1
Wheelchair or Mobility Aid Envelope

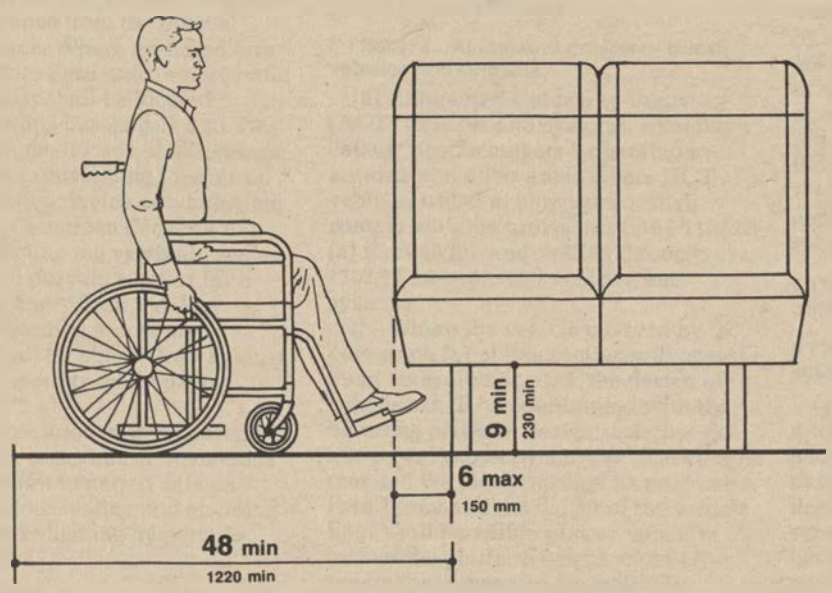

Fig. 2
Toe Clearance Under a Seat

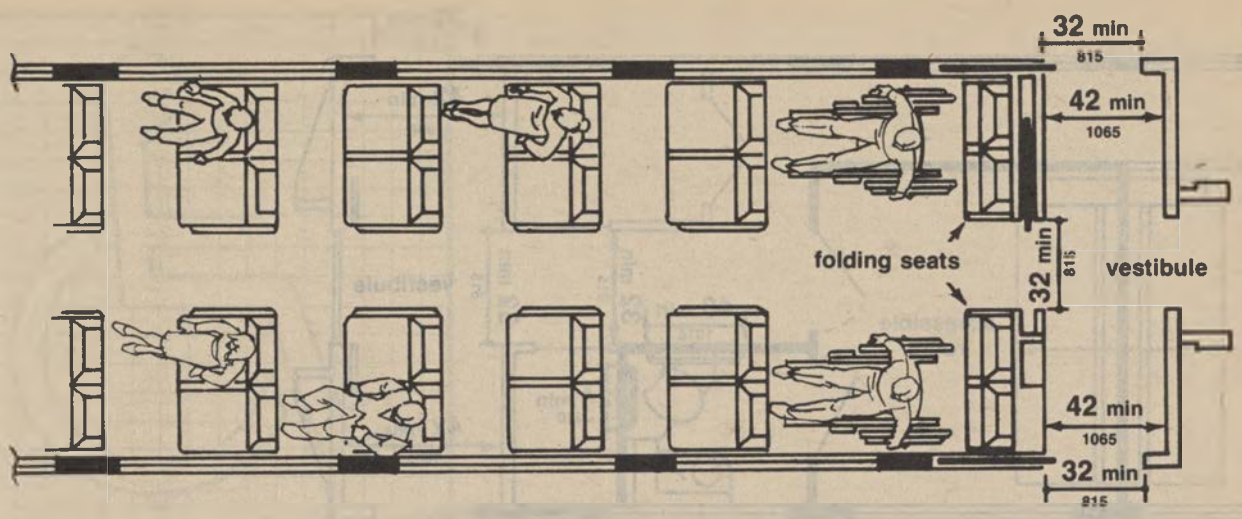

Fig. 3
Commuter Rail Car (without restrooms)

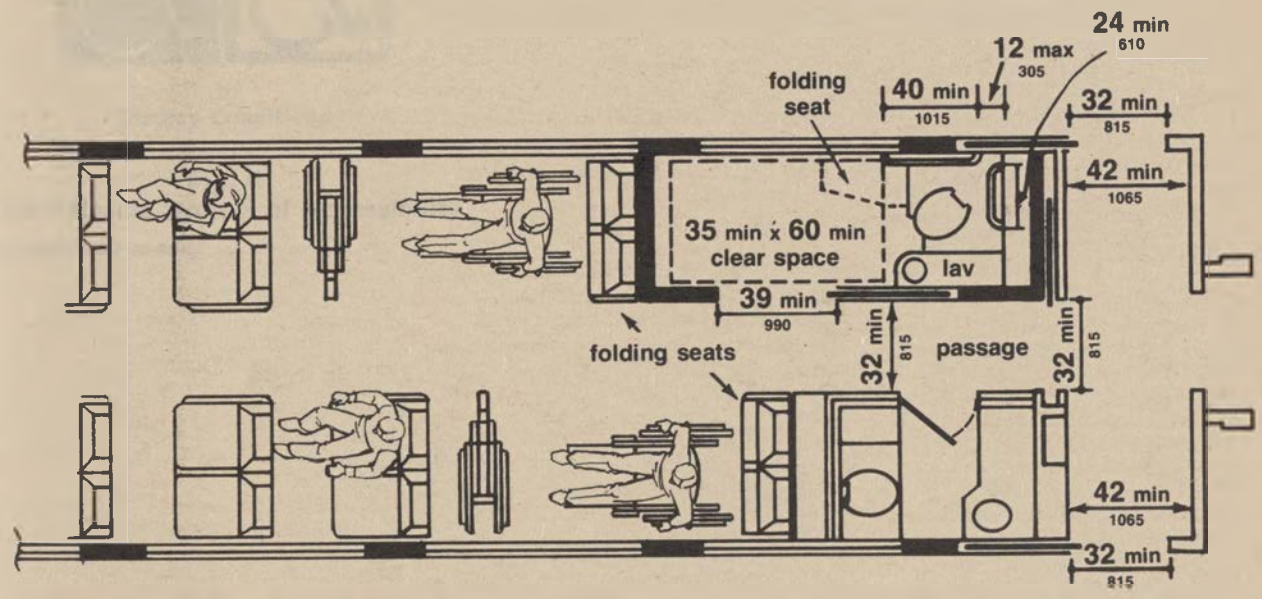

Fig. 4
Intercity Rail Car (with accessible restroom)

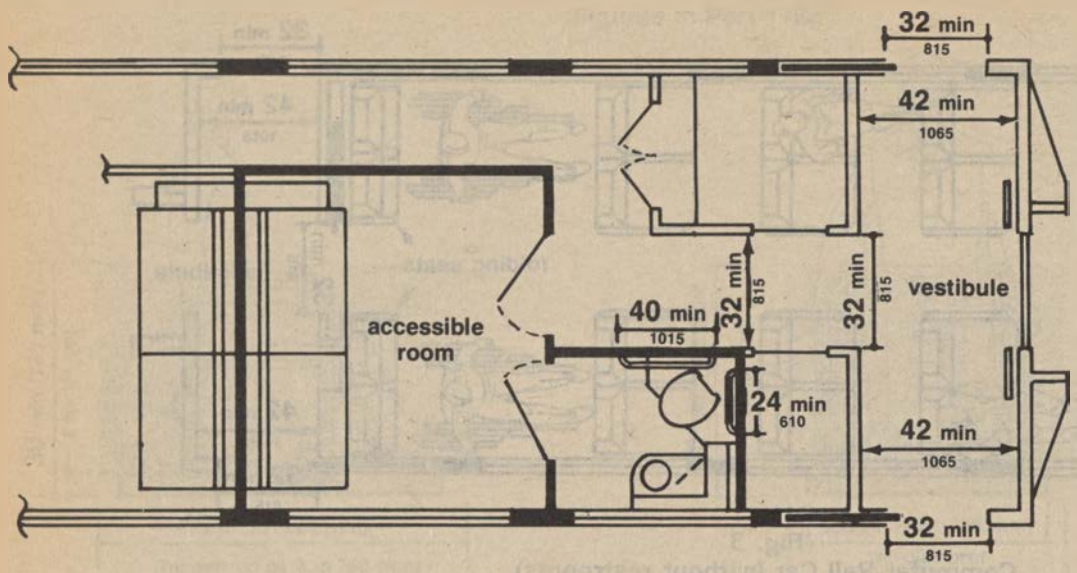

Fig. 5
Intercity Rail Car (with accessible sleeping compartment)

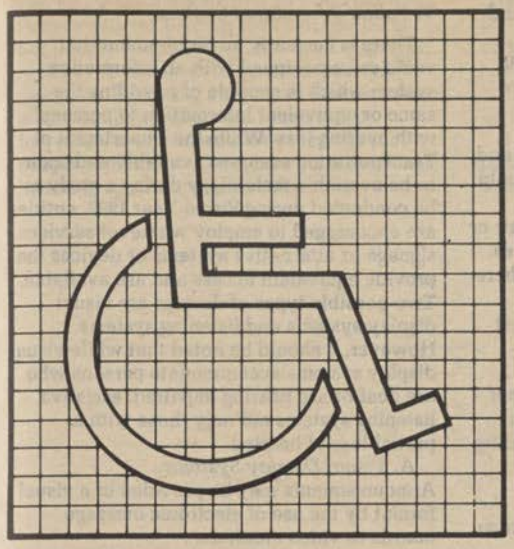

(a)
Proportions

(b)
Display Conditions

Fig. 6
International Symbol of Accessibility

BILLING CODE 8150-01-C

Appendix to Part 1192—Advisory Guidance

This appendix contains materials of an advisory nature and provides additional information that should help the reader to understand the minimum requirements of the guidelines or to design vehicles for greater accessibility. Each entry is applicable to all subparts of this part except where noted. Nothing in this appendix shall in any way obviate any obligation to comply with the requirements of the guidelines themselves.

I. Slip Resistant Surfaces—Aisles, Steps, Floor Areas Where People Walk, Floor Areas in Securement Locations, Lift Platforms, Ramps

Slip resistance is based on the frictional force necessary to keep a shoe heel or crutch tip from slipping on a walking surface under conditions likely to be found on the surface. While the dynamic coefficient of friction during walking varies in a complex and non-uniform way, the static coefficient of friction, which can be measured in several ways, provides a close approximation of the slip resistance of a surface. Contrary to popular belief, some slippage is necessary to walking, especially for persons with restricted gaits; a truly "non-slip" surface could not be negotiated.

The Occupational Safety and Health Administration recommends that walking surfaces have a static coefficient of friction of 0.5. A research project sponsored by the Architectural and Transportation Barriers Compliance Board (Access Board) conducted tests with persons with disabilities and concluded that a higher coefficient of friction was needed by such persons. A static coefficient of friction of 0.6 is recommended for steps, floors, and lift platforms and 0.8 for ramps.

The coefficient of friction varies considerably due to the presence of contaminants, water, floor finishes, and other factors not under the control of transit providers and may be difficult to measure. Nevertheless, many common materials suitable for flooring are now labeled with information on the static coefficient of friction. While it may not be possible to compare one product directly with another, or to guarantee a constant measure, transit operators or vehicle designers and manufacturers are encouraged to specify materials with appropriate values. As more products include information on slip resistance, improved uniformity in measurement and specification is likely. The Access Board's advisory guidelines on Slip Resistant Surfaces provides additional information on this subject.

II. Color Contrast—Step Edges, Lift Platform Edges

The material used to provide contrast should contrast by at least 70%. Contrast in percent is determined by:

$$\text{Contrast} = [(B_1 - B_2)/B_1] \times 100$$

where B_1 = light reflectance value (LRV) of the lighter area

and B_2 = light reflectance value (LRV) of the darker area.

Note that in any application both white and black are never absolute; thus, B_1 never equals 100 and B_2 is always greater than 0.

III. Handrails and Stanchions

In addition to the requirements for handrails and stanchions for rapid, light, and commuter rail vehicles, consideration should be given to the proximity of handrails or stanchions to the area in which wheelchair or mobility aid users may position themselves. When identifying the clear floor space where a wheelchair or mobility aid user can be accommodated, it is suggested that at least one such area be adjacent or in close proximity to a handrail or stanchion. Of course, such a handrail or stanchion cannot encroach upon the required 32 inch width required for the doorway or the route leading to the clear floor space which must be at least 30 by 48 inches in size.

IV. Priority Seating Signs and Other Signage

A. *Finish and Contrast.* The characters and background of signs should be eggshell, matte, or other non-glare finish. An eggshell finish (11 to 19 degree gloss on 60 degree glossimeter) is recommended. Characters and symbols should contrast with their background—either light characters on a dark background or dark characters on a light background. Research indicates that signs are more legible for persons with low vision when characters contrast with their background by at least 70 percent. Contrast in percent is determined by:

$$\text{Contrast} = \{(B_1 - B_2)/B_1] \times 100$$

where B_1 = light reflectance value (LRV) of the lighter area

and B_2 = light reflectance value (LRV) of the darker area.

Note that in any application both white and black are never absolute; thus, B_1 never equals 100 and B_2 is always greater than 0.

The greatest readability is usually achieved through the use of light-colored characters or symbols on a dark background.

B. *Destination and Route Signs.* The following specifications, which are required for buses (§ 1192.39), are recommended for other types of vehicles, particularly light rail vehicles, where appropriate.

1. Where destination or route information is displayed on the exterior of a vehicle, each vehicle should have illuminated signs on the front and boarding side of the vehicle.

2. Characters on signs covered by paragraph IV.B.1 of this appendix should have a width-to-height ratio between 3:5 and 1:1 and a stroke width-to-height ratio between 1:5 and 1:10, with a minimum character height (using an upper case "X") of 1 inch for signs on the boarding side and a minimum character height of 2 inches for front "headsigns", with "wide" spacing (generally, the space between letters shall be 1/16 the height of upper case letters), and should contrast with the background, either dark-on-light or light-on-dark, or as recommended above.

C. *Designation of Accessible Vehicles.* The International Symbol of Accessibility should be displayed as shown in Figure 6.

V. Public Information Systems

There is currently no requirement that vehicles be equipped with an information system which is capable of providing the same or equivalent information to persons with hearing loss. While the Department of Transportation assesses available and soon-to-be available technology during a study to be conducted during Fiscal Year 1992, entities are encouraged to employ whatever services, signage or alternative systems or devices that provide equivalent access and are available. Two possible types of devices are visual display systems and listening systems. However, it should be noted that while visual display systems accommodate persons who are deaf or are hearing impaired, assistive listening systems aid only those with a partial loss of hearing.

A. *Visual Display Systems.* Announcements may be provided in a visual format by the use of electronic message boards or video monitors.

Electronic message boards using a light emitting diode (LED) or "flip-dot" display are currently provided in some transit stations and terminals and may be usable in vehicles. These devices may be used to provide real time or pre-programmed messages; however, real time message displays require the availability of an employee for keyboard entry of the information to be announced.

Video monitor systems, such as visual paging systems provided in some airports (e.g., Baltimore-Washington International Airport), are another alternative. The Architectural and Transportation Barriers Compliance Board (Access Board) can provide technical assistance and information on these systems ("Airport TDD Access: Two Case Studies," (1990)).

B. *Assistive Listening Systems.* Assistive listening systems (ALS) are intended to augment standard public address and audio systems by providing signals which can be received directly by persons with special receivers or their own hearing aids and which eliminate or filter background noise. Magnetic induction loops, infra-red and radio frequency systems are types of listening systems which are appropriate for various applications.

An assistive listening-system appropriate for transit vehicles, where a group of persons or where the specific individuals are not known in advance, may be different from the system appropriate for a particular individual provided as an auxiliary aid or as part of a reasonable accommodation. The appropriate device for an individual is the type that individual can use, whereas the appropriate system for a station or vehicle will necessarily be geared toward the "average" or aggregate needs of various individuals. Earphone jacks with variable volume controls can benefit only people who have slight hearing loss and do not help people who use hearing aids. At the present time, magnetic induction loops are the most feasible type of listening system for people who use hearing aids equipped with "T-coils", but people without hearing aids or those with hearing aids not equipped with inductive pick-ups cannot use them without special receivers. Radio frequency systems

can be extremely effective and inexpensive. People without hearing aids can use them, but people with hearing aids need a special receiver to use them as they are presently designed. If hearing aids had a jack to allow a by-pass of microphones, then radio frequency systems would be suitable for people with and without hearing aids. Some listening systems may be subject to interference from other equipment and feedback from hearing aids of people who are using the systems. Such interference can be controlled by careful engineering design that anticipates feedback sources in the surrounding area.

The Architectural and Transportation Barriers Compliance Board (Access Board) has published a pamphlet on Assistive Listening Systems which lists demonstration centers across the country where technical assistance can be obtained in selecting and installing appropriate systems. The state of New York has also adopted a detailed technical specification which may be useful.

[FR Doc. 91–20798 Filed 9–5–91; 8:45 am]

BILLING CODE 8150–01–M

federal register

Friday
September 6, 1991

Part IV

Department of Transportation

49 CFR Parts 27, 37 and 38

Transportation for Individuals With Disabilities; Final Rule

DEPARTMENT OF TRANSPORTATION

49 CFR Parts 27, 37 and 38

[Docket 47483; Notice 91-14]

RIN 2105-AB53

Transportation for Individuals With Disabilities

AGENCY: Department of Transportation, Office of the Secretary.

ACTION: Final rule.

SUMMARY: The Department is issuing a final rule implementing the transportation provisions of the Americans with Disabilities Act (ADA). The rule contains provisions on acquisition of accessible vehicles by private and public entities, requirements for complementary paratransit service by public entities operating a fixed route system, and provision of nondiscriminatory accessible transportation service. The Department is also amending the Department's rule implementing section 504 of the Rehabilitation Act of 1973 in light of the ADA rule.

EFFECTIVE DATES: The provisions of 49 CFR parts 37 and 38 are effective October 7, 1991. The amendments to 49 CFR part 27 are effective October 7, 1991, except the deletions of subparts B and C thereof and the redesignation of subpart F as subpart C and subpart D as subpart B, which are effective January 26, 1992.

FOR FURTHER INFORMATION CONTACT: Robert C. Ashby, Deputy Assistant General Counsel for Regulation and Enforcement, Department of Transportation, 400 7th Street, SW., room 10424, Washington, DC, 20590. (202) 366-9306 (voice); (202) 755-7687 (TDD), or Susan Schruth, Office of Chief Counsel, Urban Mass Transportation Administration, same address, room 9316. (202) 366-4011 (voice); (202) 366-2979 (TDD). Copies of the rule in accessible formats will be made available on request.

SUPPLEMENTARY INFORMATION: This portion of the preamble discusses the basis and purpose of part 37. It also responds to comments on the Department's notice of proposed rulemaking on this subject issued April 4, 1991 (56 FR 13856) and highlights provisions in part 38, the Department's promulgation of the accessible vehicle specifications developed by the Architectural and Transportation Barriers Compliance Board.

The Department received over 260 written comments on the NPRM, from a wide variety of disability community, transit industry, and other interested commenters. In addition, the Urban Mass Transportation Administration (UMTA) held six public hearings, at which we received approximately 120 spoken and written comments.

Before issuing the NPRM, in January 1991, the Urban Mass Transportation Administration (UMTA) sponsored a meeting of a Federal Advisory Committee, which included 26 persons representing transit providers, state governments, disability groups, the Architectural and Transportation Barriers Compliance Board, the Office of the Secretary and UMTA. A number of observers from other organizations also contributed to the discussion. The principal subjects discussed were service criteria for complementary paratransit, undue financial burden for complementary paratransit, and operational issues. This group met again in June 1991 to discuss the comments and the Department's responses to them and provided suggestions about what the final rule should say. Advisory Committee discussions of issues are noted in the preamble.

We wish to thank the members of the Advisory Committee for their time, creative thinking, and cooperative and constructive approach to issues. Transit providers and the disability community must work together if the promise of the ADA is to be realized, and the Advisory Committee's deliberations were a good example of how such a working relationship can contribute to achieving this goal.

Section-by-Section Analysis

This portion of the preamble discusses each section of the final rule, summarizing the comments on the corresponding portion of the notice of proposed rulemaking and providing the Department's responses to the comments. In appendix D to this rule, the Department explains in greater detail its interpretation and construction of the provisions of the final rule.

Section 27.19 Amendments to DOT Section 504 Rule

The Department is amending its existing section 504 rule (49 CFR part 27) to avoid potential overlapping, duplication, or confusion between ADA and 504 requirements. For this reason, a number of provisions of the 504 rule are being removed. The effective date of some of these removals is January 26, 1992, in order to avoid gaps in regulatory coverage between now and then.

The basic relationship between section 504 and the ADA is that a recipient of DOT funds complies with its section 504 obligations by complying with its ADA obligations. At the same time, section 501 of the ADA provides that nothing in the ADA shall be construed "to apply a lesser standard" than section 504 or agency regulations implementing section 504.

One comment suggested clarifying that 504 requirements apply to private as well as public entities. The rule does cover all recipients, and language emphasizing this point has been added.

Part 27 includes references to the Uniform Federal Accessibility Standard (UFAS) as the standard that construction and alterations of facilities must meet. A comment suggested updating references to UFAS in the section 504 rule, so that there would be consistency between portions of that rule and Department of Justice (DOJ) rules that apply to airports and other covered entities (the DOJ rules, like part 37, rely on the new Access Board facility standards). We have done so with an amendment to § 27.67(b) of the rule, which defines the applicable accessibility standard for purposes of part 27.

Finally, there were a few comments concerning proposed § 27.19(c). This proposal would have applied, under the authority of section 504, the ADA's public entity transit requirements to private entities receiving UMTA funds who operate an urban mass transit system. The Department is deleting the proposed provision in part 27, and we discuss the issues involved in connection with 49 CFR 37.23 below.

Subpart A—General

Section 37.1 Purpose

There were no comments on this section. There have been only minor editorial changes to its text.

Section 37.3 Definitions

Section 501 of the ADA makes it clear that in no case should an entity's responsibilities under section 504 of the rehabilitation Act be lessened because of the ADA.

Since an option for compliance under section 504 is accessible fixed route transportation, entities such as the examples mentioned above would be held to a comparable standard, since private entities primarily engaged in the business of providing transportation must purchase accessible new vehicles. Accordingly, we are deleting the proposed paragraph.

We have added a number of entries in the definitions section of the rule. These additions pick up definitions from the Department of Justice (DOJ) ADA regulations and the Access Board

guidelines. The additions are "accessible," "alteration," "automated guideway transit system," "bus," "high speed rail," "light rail," "rapid rail," and "service animal." The Department also has made editorial modifications to the definition of "disability" to be consistent with the DOJ definition of the term.

We received several comments on the definition of "commuter bus service." This term is important because the ADA does not require public entities to provide complementary paratransit with respect to commuter bus service. One of these comments suggested the definition be clarified so as not to exclude a service that provides some service opposite to the main rush hour traffic flow. The existing definition, which talks of service "predominantly," rather than exclusively, in one direction, does not exclude such service.

Another comment suggested that the term specifically include dedicated bus service to commuter rail routes. It is reasonable to infer that commuter bus service was excepted from the ADA's paratransit requirement because of the differences between the characteristics of commuter service and regular mass transit service. Typically, commuter bus service does not attempt to cover an area comprehensively, but rather has a limited route structure connecting a limited number of origins and destinations. Typically, this service is intended to interface with another mode of transportation (e.g., the automobile, with the connection occurring at a park-and-ride facility). Trips are often primarily for limited purposes (e.g., work trips).

We construe the commuter bus category to apply to a range of services which differ significantly from the model of urban mass transportation fixed route service to which Congress attached the complementary paratransit obligation. For this range of services, because of their differences from urban mass transportation fixed route service, paratransit is not a necessary or appropriate complement.

A number of services other than work-trip oriented commuter service are within this range. The commenter's dedicated service to commuter rail, some airport shuttle services, public university shuttles, or intercity rail connecter services all have limited routes and limited origins and destinations, do not attempt to provide areawide transportation service, interface with one or more transportation modes, and have limited purposes. For this reason, we have included systems with these characteristics in the definition of "commuter bus service." The implications of this change for certain specific systems are discussed in the discussion of Subpart B in the preamble to this document.

A few comments addressed "disability." Some suggested removing "permanent or temporary," suggesting that this language is unnecessary. The DOJ definition does not include these words, so we have deleted them for consistency. In our view, the terms are unnecessary because any condition that meets the criteria of the definition, regardless of its duration, is a disability. Other comments suggested adding specific mention of such conditions as cognitive or energy deficient disorders and environmental illness. The DOJ definition does not cite these conditions specifically. The list of conditions in the definition, in any case, is not exhaustive, and does not exclude unspecified conditions that meet its criteria. For these reasons, we did not add mention of the conditions.

One commenter suggested a much more detailed definition of "mental disability." DOJ did not adopt this comment, which was also made to its proposed rules, and we think it best to remain consistent with DOJ. Moreover, the details of the definition of disability are probably somewhat less important in the DOT rule than in the DOJ or Equal Employment Opportunity Commission (EEOC) rules, since it is functional ability to use fixed route transit, rather than precise diagnosis or classification of a disability, which is most relevant to the provision of transportation under this rule.

In the definition of "facility," the Department has deleted the reference in DOJ's definition to "rolling stock and other conveyances." In the DOT rule, there is a clear demarcation between facilities and vehicles, and we believe that the definition will be clearer for the deletion of these terms.

The most frequent subjects of comment were the definitions of "fixed route" and "demand responsive" service. The most frequent comment was that the definitions strayed too far from the ADA statutory definitions of the terms. Commenters objected to references to the presence or absence of an advance request for service as a distinguishing point between the two kinds of service. They also objected to the definition's statement that the terms applied to transportation "including but not limited to" designated and specified transportation services. While an advance request for service is a key characteristic distinguishing fixed route and demand responsive service, this characteristic is not included in the statutory text, and so we will delete it from the regulatory text.

The reason for the "including but not limited to" language has to do with the structure of title III of the ADA. Private entities not primarily engaged in the business of transporting people do not, by statutory definition, provide specified public transportation service. The definitions of fixed route and demand responsive transportation must apply to these entities as well as public entities and private entities who are primarily engaged in the business of transporting people. For clarity, the language has been reorganized to make it clear that it applies only to private entities.

The Department received a few comments suggesting amendment of the definition of "intercity passenger rail car" to encompass rail cars on systems run by entities other than Amtrak. This issue is addressed in the Applicability subpart. Another commenter wanted this definition to specify that it applied only to rail passenger cars with accommodations intended for revenue passengers. We recognize that passenger railroads have cars that are not intended to accommodate passengers (e.g., baggage cars, dormitory cars for workers). While we do not think that these cars could easily be confused with rail passenger cars, there is no harm in adding the requested language (which the Access Board also has done).

We have added a reference to private entities in the definition of "operates." This is an important definition, which forms the basis for the "stand in the shoes" provision affecting contractors to other transportation providers. Comments suggested that it was reasonable to apply the "stand in the shoes" concept to private contractors to private entities, as well as private contractors to public entities. We agree, and this addition is consistent with this determination.

The Department received a few comments on the definition of "station." Two asked for the addition of a definition of "flag stop," a term used in the NPRM definition of "station." We have added a definition of this term, derived from the Department's 1979 section 504 rule as a parenthetical in the "station" definition. Other comments noted that the definition applies to intercity and commuter but not to light and rapid rail systems. The "station" definition in the ADA itself shares this limitation. The addition of definitions of "light rail" and "rapid rail" should help to provide clarity in this area.

The Department has added a new definition of "transit facility." This

definition relates only to the Access Board guideline requirement for TDDs, which applies to transit facilities. Only closed structures the primary function of which serves as a transit facility are made subject to the TDD requirement. The aim of the definition is to avoid a potentially burdensome mandate for TDDs in structures not primarily used for transportation purposes. Consistent with Access Board terminology, the term "text telephone" is used interchangably in the rule with "TDD."

In the definition of "used vehicle," we have deleted a reference to June 1990 as a trigger date for a vehicle being considered as used. This date, which derived from the ADA's legislative history, had relevance with the vehicle accessibility requirements first went into effect in August 1990. Now, however, any vehicle with prior use is considered to be "used."

In response to comments concerning the coverage of vanpools under the rule, we have added a definition of "vanpool." This term refers to ridesharing arrangements for work trips in which the driver is, essentially, a volunteer. The coverage of vanpools is discussed in the Applicability subpart.

Several comments addressed the definition of "wheelchair." Some suggested it be expanded (e.g., to include canes and walkers), others that it be clarified or contracted (e.g., with respect to three-wheeled scooters and electric wheelchairs). Most commenters supported the definition's inclusion of "non-traditional" mobility devices. One comment suggested the substitution of the term "mobility device" for "wheelchair," which we are not doing since "wheelchair" is used in the statute. We have incorporated into the definition the Access Board's definition of the related term "common wheelchair" (i.e., a wheelchair that fits on a 30" x 48" lift platform and does not weigh more than 600 pounds when occupied).

Section 37.5 Nondiscrimination

Some commenters with visual impairments asked for the addition of a provision prohibiting transit providers from requiring individuals with disabilities to use priority seats. One commenter, who is blind, told of a personal experience in which a driver stopped the bus and called the police because the commenter insisted on standing rather than sitting in an "elderly and handicapped" seat. The existing language of paragraph (b) of this section generally covers such situations. However, to ensure that the requirement is clearly understood, we have added language specifically prohibiting an entity from requiring an individual with a disability to use a priority seat, if the individual does not choose to use such a seat.

There were a few comments on the issue of special charges, which the NPRM would prohibit. Disability groups that commented supported the ban. Transportation providers generally wanted assurance that the provision would not prohibit nondiscriminatory charges for service, which is indeed the case. The provision also does not prohibit charges otherwise permitted by the rule (e.g., fares for complementary paratransit that may be twice the fixed route fare).

One commenter asked for provisions that would deem entities not to be in noncompliance for occasional violations if they had a policy prohibiting violations and for situations in which a driver reasonably believed that he or she could not assist the passenger without significant risk of injury. On the first point, while the Department encourages clearly stated policies requiring compliance with the ADA, we do not believe that having such a policy is sufficient for compliance. As in any area of ADA compliance, employers are held responsible for their employees' actions.

On the second point, the Department does not believe it would be appropriate to provide a generic exception to the requirement to provide service to persons with disabilities. We are concerned that such an exception could be too broadly interpreted.

Drivers of taxis or shuttles routinely assist passengers with stowing luggage which is much heavier than most folding wheelchairs, the users of which are often able to transfer to a vehicle seat on their own. Persons with more severe mobility impairments, who use electric wheelchairs, will, in most cases, be unable to use an automobile and, in most cases, their wheelchairs can go up a ramp under their own power. Heavy lifting will typically not be required of the driver of a lift-equipped van. Consequently, it is likely that problems of the kind envisioned by the commenter will not occur frequently. If occasional problems do occur, they are better dealt with on a case-by-case basis in the enforcement process, where all the specifics of a situation can be considered, than by a general provision of the rule.

Commenters from disability groups asked that there be a prohibition on requirements for attendants, while some transit providers asked for the discretion to require them (e.g., for someone with a mental disability who had a history of violent conduct). Consistent with the DOJ ADA rulemakings, the rule will prohibit attendant requirements. If a person is not violent or engaging in disruptive behavior the entity is required to provide service. If a person is violent, seriously disruptive, or engaging in illegal conduct, however, the provider may, consistent with established procedures for all riders, refuse to carry the passenger. The mere fact that a passenger may, because of a disability, offend or annoy other persons is not a reason to deny service, however.

The Department has added a provision, drawn from the DOJ title III rules, that prohibits denials of service or other discriminatory treatment based on insurance company requirements (e.g., coverage or rate decisions) inconsistent with this rule.

Section 37.7 Standards for Accessible Vehicles

This section provides that a vehicle is considered to be accessible if it meets the Architectural and Transportation Barriers Compliance Board (Access Board) guidelines, which the Department has incorporated into its rules as 49 CFR part 38. There were a substantial number of comments about the Access Board guidelines, most of which were transmitted to the Access Board as well as to DOT. DOT worked closely with the Access Board to work out problems which the comments raised, on such subjects as lift platform dimensions and railcar end door and vestibule dimensions. The Access Board's resolutions of these and other issues, and the Board's responses to comments, are set forth in the preamble to the final Access Board guidelines. The most important issues are summarized in the preamble to part 38.

The final version of the Access Board guidelines includes the concept of "equivalent facilitation." Section 37.7(b) reflects this addition. Equivalent facilitation is a concept that has existed in the facilities accessibility standards, but was not included in the ATBCB's proposed vehicle standards. Briefly, equivalent facilitation provides an alternative to strict compliance with the specifications of a particular standard. It is not a lesser standard, but it does acknowledge that there may be unique circumstances that make it impossible for an entity to comply literally with the standard.

Equivalent facilitation applies to both rail and non-rail vehicles, and could include a variety of approaches to providing access. For example, in the case of a rail system that had difficulty meeting horizontal gap requirements, it

might be possible for the use of a bridgeplate (and the deployment of personnel to put the bridgeplate in place) to be an equivalent facilitation, in appropriate circumstances.

Equivalent facilitation would be allowed in those cases where an entity can demonstrate that its alternative method of compliance provides comparable access and usability to persons with disabilities. While the Access Board guidelines introduce the concept of equivalent facilitation, the DOT regulation specifies the procedure for using the alternative method of compliance. Paragraph (b) sets this procedure out, explaining that determinations will be made on a case-by-case basis and that the public participation requirements generally required for this part must be used to determine the "equivalent" method of complying with the intent of the standard.

Transit providers requested that the DOT rule make clear that vehicles purchased under accessibility standards in existence before these new requirements are still considered accessible. This comment was echoed by transit properties for modifications to facilities that have been made under previously valid requirements.

The final rule makes clear that in order for a vehicle to be considered accessible to and usable by an individual with disabilities, it must comply with the Access Board standards. A vehicle that does not meet these standards cannot, therefore, be regarded as "accessible." The Access Board guidelines themselves have taken into consideration the concern about the use of vehicles meeting older standards being able to be used to meet the "one car per train" standard.

Finally, a new paragraph (c) has been added to cross-reference portions of part 38 applicable to over-the-road buses subject to public entity requirements by virtue of the "stand in the shoes" requirement of § 37.23 or because the buses were purchased or leased directly by a public entity. While over-the-road coaches purchased by or on behalf of a public entity have had to be accessible since August 26, 1990, we had not previously defined what accessible means. Accordingly, this regulation specifies that an over-the-road bus must have a lift which meets the performance requirements of a regular bus lift (see § 38.23) and meet the interim accessibility features specified for all other over-the-road buses in part 38, subpart G.

Section 37.9 Standards for Accessible Transportation Facilities

Section 37.13(b) of the NPRM proposed that each transportation facility, in order to be accessible to and usable by persons with disabilities, must meet the guidelines proposed by the Architectural and Transportation Barriers Compliance Board (Access Board), reprinted as Appendix B to part 37 in the proposed rule.

While the Department received over 150 comments to this section and the standards themselves, the comments were almost universally duplicative of comments sent directly to the Access Board. The Access Board is the appropriate entity to review the comments, since it is their responsibility under the ADA to define what an accessible facility looks like. All of the comments are discussed at length in the preamble to the Access Board's document adopting their guidelines as final.

The Department did receive several comments requesting clarification that a facility built to previously valid accessibility standards be "grandfathered"—that is, considered accessible. This would come up especially in the context of the key station requirement, in which rail operators will have to make designated key stations accessible by July 26, 1993 (with some extensions of time available).

The argument of the commenters is that they should not be penalized for making their stations or certain aspects of their stations accessible before the effective date of this rule. The Department agrees with this, and specifies that certain work done before the effective date of this rule will continue to be considered accessible.

The grandfather provision applies only to key stations, if the work was done in compliance with the Uniform Federal Accessibility Standards or ANSI A117.1 (1980), American National Standards Specifications for Making Buildings and Facilities Accessible to and Usable by, the Physically Handicapped, it will be considered accessible. For example, if an entity used a Federal grant or loan or money derived from the Metropolitan Washington Compact to make changes to a building, it would have had to comply with the Uniform Federal Accessibility standards. Likewise, a private entity, without benefit of any Federal money, may have complied with the ANSI A117.1 standard in altering a facility. So long as the work was done in conforminty with the standard that was in effect when the work was done, the facility will be considered accessible.

It is important to note, however, that one change does not make the entire facility accessible. For example, if tactile strips were installed along the station platform edges, these strips would be considered accessible, even if they do not meet the standards being promulgated today, if they met one the UFAS or ANSI standard cited above when installed. However, the installation of tactile strips does not eliminate the entity's responsibility to make other changes to the facility to make it accessible in other ways.

New paragraph (c) of this section clarifies a provision of the Access Board's standards concerning the construction of bus stop pads. The final Access Board standard (found at § 10.2.1(1) of Appendix A to part 37) has been rewritten slightly to clear up confusion about the perceived necessary construction of a bus stop pad. Section 10.2.1(1) does not require that anyone build a bus stop pad; it does specify what a bus stop pad must look like, if it is constructed.

The clarifying language in the DOT rule is to explain that public entities must exert control over the construction of bus stop pads if they have the ability to do so. The Access Board, as well as DOT, recognizes that most physical improvements related to bus stops are out of the control of the transit provider. Paragraph (c) of § 37.9 merely notes that where a transit provider does have control over the construction, it must exercise that control to ensure that the pad meets these specifications.

One other comment was submitted to the Access Board concerning an implication of this provision where there is a bus loading island with buses pulling up on both sides of the island. The concern is that the bus pad specification would require the island to be a minimum of 84 inches wide (two widths of a bus stop pad), which exceeds most available urban space. While building a "double-wide pad" would be one approach to compliance, other approaches based on operational practices at a pad of normal width would also be acceptable, consistent with the concept of "equivalent facilitation."

A new paragraph (e), parallel to § 37.7(b), has been added to provide a procedure for reviewing proposed equivalent facilitation requests in transportation facilities.

Section 37.11 Administrative Enforcement

There was little comment on this section, the substance of which has not been changed from the NPRM.

Section 37.13 Effective Date for Certain Vehicle Lift Specifications

This section is new, and reflects comments from transit providers and bus manufacturers concerning the effect of Access Board vehicle lift specifications (e.g., relating to lift platform size). Commenters were concerned that, if lifts on buses procured immediately after this rule went into effect had to meet these specifications, there would be difficulties in meeting procurement requests in a timely fashion. For example, some retooling or redesign may be necessary that could not be accomplished without some delay. For this reason, the Department has decided to grant a brief delay in the effectiveness of certain lift specifications, until January 26, 1992. Particularly given the interaction of this section with the paratransit eligibility standards, we do not believe that this additional time for compliance should result in significant problems for passengers.

Subpart B—Applicability

Section 37.21 Applicability—General

In order to devote sufficient attention to a variety of issues regarding the applicability of the regulation, the discussion of applicability takes up subpart B of the final regulation. The matters covered by this section are quite obvious, and were not the subject of comment. Paragraphs (a) and (b) are unchanged from the NPRM. Paragraph (c) has been added to underline the fact that most, if not all, transportation providers covered by part 37 also are covered by DOJ regulations either under title II or title III of the ADA. We have worked closely with the DOJ to ensure consistency among our regulations. However, should any apparent inconsistency crop up in the future, part 37 would control with respect to transportation vehicle, facilities, or services.

Section 37.23 Service Under Contract

This section embodies the "stand in the shoes" concept discussed at length in the Department's October 4 final rule and the NPRM. Briefly, it provides that when a public entity contracts with a private entity to provide transportation service, the private entity must play by the public entity's rules with respect to vehicle acquisition and transportation service issues.

This provision is based on the definition of the term "operates" in section 221(4) of the ADA, which says that the term

> * * * as used with respect to a fixed route system or demand responsive system, includes operation of such system by a person under a contractual or other arrangement or relationship with a public entity.

When section 222(b) of the Act provides that it is discrimination for a public entity to purchase or lease an inaccessible vehicle, for example, it applies the accessible vehicle acquisition requirement to private entities "operating" such a system, or part of one, under a contract for a public entity.

This understanding of the statutory language was clearly contemplated by Congress.

> With regard to the operation of a system providing public transportation, if a public entity has entered into a contractual or other arrangement or relationship with a private entity to operate the system, or a portion of the system, the public entity must assure that the same accessibility requirements are met by the private entity for service provided under a contractual, or other arrangement or relationship as would apply if the public entity were operating the system, or portion of the system, itself. H. Rept. 101–485, Pt. 1 at 26.

All but one commenter who addressed this subject supported the "stand in the shoes" concept (that commenter believes that over-the-road buses operated by private contractors for public entities should not have to be accessible, a position the Department believes to be inconsistent with the statute—see 56 FR 13859–60, April 4, 1991). Commenters favoring, or not objecting, to this approach, included disability groups and both public and private transit providers. Since the provision is so clearly called for by the statute, it is being retained. A few commenters representing disability groups asked for more stringent requirements (e.g., that all buses, new or existing, provided by a contractor for public entity services be accessible). The Department believes this approach would exceed the statutory attachment of accessibility requirements to situations involving a "purchase or lease."

This provision applies not only to the acquisition of vehicles under contract, but also in contemplation of use under contract, to a public entity. The "in contemplation of" language was opposed by a few transit providers and generally was endorsed by disability group commenters. While it is clear from the comments that this provision would need to be enforced on a case-by-case basis, which typically involves some difficult judgment calls, the Department believes it is valuable to retain "in contemplation of." This language plugs a potential loophole in the "stands in the shoes" provision big enough to accommodate an inaccessible bus.

In the absence of this provision, if a contractor was about to sign a contract with a public entity, and wanted to buy inaccessible buses for service under the contract, the contractor could arguably do so, since the contractual relationship triggering the applicability of this section did not exist at the moment of solicitation. The Department believes such a result to be inconsistent with the ADA, and the "in contemplation of" language should help to prevent it.

The NPRM also proposed that a public entity could not diminish its percentage of accessible vehicles and service through contracting out. That is, while a contractor can use existing inaccessible vehicles in its fleet for service contracted with a public entity, the public entity cannot allow this situation to diminish the overall accessibility of its fleet. A substantial majority of commenters, both transit providers and disability groups, favored including this provision. Two commenters opposed it, one on the basis that it would implicitly require retrofitting and the other on the basis that it would inhibit contracting out. The latter commenter also said it was unfair to require "no diminution" in the case of contracting out but not in the case where a public entity acquires inaccessible used buses.

While retrofit of some vehicles is one option a public entity could choose to comply with this provision, retrofitting is not required. An entity could accelerate acquisition of new accessible buses. (Since all new bus orders must be for accessible vehicles, acceleration may not be needed in many cases, because the new accessible buses coming into a fleet in the normal course of procurement may be sufficient to maintain or improve the accessible vehicle ratio.) Alternatively, a contractor could provide some accessible buses.

Neither are we persuaded that this provision would inhibit privatization. Before the ADA, no one was required by Federal law to acquire accessible vehicles; now, everyone's acquisitions must be accessible. In this climate, it is difficult to support a conclusion that maintaining existing ratios of accessible buses will have any significant impact on the attractiveness of privatization. Much more significant economic and

political forces will drive privatization decisions.

The situation of a public entity acquiring inaccessible used vehicles is distinguishable from the contracting out situation. Before a public entity may acquire inaccessible used buses, it must engage in a thorough, nationwide, good faith effort to find accessible used vehicles. There is a reasonable possibility that this search will enable it to find at least some accessible used vehicles, with which its accessibility ratio can be maintained. Moreover, since most public entities are UMTA-assisted, UMTA oversight of the acquisition process can help to address situations (which are not that likely to occur in any event) in which large purchases or leases of inaccessible vehicles would depress a recipient's accessibility ratio.

The Advisory Committee discussed a situation in which a new transit authority, which now has no vehicles, could contract out all its initial service, with the possible result that there would be no accessible service provided. The "no diminution" language would not help the situation, and some committee members favored language that would mandate a minimum level of accessible service in this situation. The Department does not believe this to be needed. If a public entity were to take this tack, it would have a very significant paratransit obligation (e.g., virtually all persons with disabilities would be eligible). The Department, in reviewing the entity's paratransit plan, would probably insist, due to the lack of accessible fixed route service, that paratransit service be phased in quickly. The entity would probably find it less expensive and easier to ensure that it had some accessible buses in its initial service.

The Department received a number of comments about a situation in South Carolina in which urban mass transportation services are provided by a private utility. As the Department understands the situation, the utility is required by law and/or franchise condition to provide transit services in Columbia and Charleston.

One of the comments, from a member of the South Carolina Congressional delegation, citing the unprofitability of the utility's existing bus service and the difficulty the utility would have in providing paratransit service, suggested that only private entity requirements should apply to the utility. Comments from disability groups disagreed, saying that the utility provided the only mass transit service in the area and that what the commenters viewed as the utility's poor record of providing mass transit service should not be rewarded at the expense of the transit needs of individuals with disabilities in the affected cities.

According to UMTA staff and commenters, the Charleston and Columbia operations are typical examples of urban fixed route bus service for the general public. They receive UMTA assistance under sections 3 and/or 9 for similar purposes, and in similar amounts, as any other fixed route mass transit provider in cities of similar size. They operate at defecits as do most fixed route transit operators.

UMTA funding does not flow directly to the utility. Rather, UMTA provides section 3 and/or 9 assistance to a designated recipient (a metropolitan planning organization [MPO] in Columbia, and to the city government of Charleston), which has an agreement with the utility through which the UMTA assistance is made available to the utility. Under this section of the rule, when a public entity (like an MPO or a city) enters into a contractual or other arrangement or relationship with a private entity to operate fixed route or demand responsive service, the public entity must ensure that the private entity meets the requirements that would apply to the public entity if the public entity itself operated the service.

As described above, the usual situation in which this "stand in the shoes" principle applies is the case of a public transit authority contracting out part of its service to a private transportation company. In the Department's construction, the language of the section encompasses not only a typical "contracting out" situation but also a situation like this one. In this case, there is another kind of "arrangement or relationship" between a private and public entity in which the private entity provides fixed route bus service, serving the public of an urban area, that a public entity would otherwise provide, receiving via a public entity the UMTA assistance which is intended for public transportation service of this very kind.

The Department concludes, then, that in this South Carolina situation the utility is subject to the requirements that would apply to a public entity providing the same kind of service and receiving the same UMTA funds. These requirements include complementary paratransit as well as the acquisition of accessible vehicles.

A few commenters and committee members also suggested applying the "stand in your shoes" concept to private contracts with other private entities. That is, if a private firm primarily engaged in the business of transporting people contracts to provide service to a private firm not so engaged, then the rules governing the latter would apply to contractor, with respect to the contracted service. The Department agrees with this suggestion, which will help to clarify the obligations of private providers in a way consistent with other parts of the statute. We have added a paragraph to this effect.

Section 37.25 University Transportation Systems

The NPRM proposed to cover public university-operated transportation systems under the requirements for public entities. All but three of the nearly 30 comments on this subject agreed, including several comments from universities as well as from disability groups. Two comments opposed the proposal, principally on the ground that such systems do not serve the entire "general public." One of the comments noted that, under section 504 or other authorities, campuses are becoming more accessible, making coverage under this rule less necessary. The commenter suggested that it would be closer to the mark to cover public universities under the same private entity requirements applicable to private universities.

It is useful at this point to review the rationale for covering public university-operated systems under the public entity requirements of the rule. The question about coverage arises from the way certain of the ADA's definitions may be read together. For example, the requirements of sections 222 and 223 of the ADA apply to a "public entity operating a fixed route system." A public university is clearly a public entity. Many campus bus systems fit the operational requirements of the section 221's definition of a fixed route system. That is, the buses operate along a prescribed route according to a fixed schedule.

However, the definition of "fixed route system" also refers to providing "designated public transportation." This term is defined, in turn, as transportation provided to "the general public." The commenters opposed to coverage contend, in effect, that a campus bus system primarily intended to transport students, faculty and staff is not intended to provide transportation to "the general public," consequently does not involve "designated public transportation," consequently is not a "fixed route system," and therefore is not subject to the accessible vehicle acquisition and complementary paratransit requirements of sections 222

and 223. The same argument would apply to demand responsive service provided by a public university or other public institution, since the definition of "demand responsive system" also includes a reference to "designated public transportation."

While the Department understands the basis for this argument, we do not construe the application of the statute in this way. The same argument would apply, perhaps with greater force, to transportation by public schools. Yet Congress specifically exempted "public school transportation" from the definition of "designated public transportation." From this we draw the inference that, in the absence of this exemption, public school transportation would have been covered under the "designated public transportation" definition. Congress could have, but did not, make a similar exemption for transportation provided by public universities or other public institutions. This argues strongly that no such exemption was intended.

Title II of the ADA appears to contemplate only two kinds of transportation provided by public entities: Fixed route and demand responsive service. Nowhere does the Act suggest that there is intended to be a third category—which might be called "none of the above"—free from all accessibility requirements. Indeed, inferring Congressional intent to create such a category would appear sharply contrary to the overall objectives of the statute.

We would also point out that campus shuttles typically serve what can fairly be thought of as the general public of the university community. While not a mass transit system serving the entire community of Ann Arbor or Madison, the University of Michigan or University of Wisconsin bus system serves the significant subset of the community that traverses the university campuses. Even if one accepts the argument that a fixed route system must serve "the general public," it is reasonable to conclude that a typical university bus system is covered by title II. Such an interpretation is also consistent with long-standing UMTA interpretation of similar terms under the Urban Mass Transportation Act.

Having determined that public universities are subject to public entity requirements, we turn to the question of the nature of that coverage. The Department will deem such systems to be commuter bus systems. Like other commuter bus systems, university fixed route systems generally have limited, rather than comprehensive, route structures. They serve a limited number of origins and destinations, and have limited functions. One of their primary functions is to interface with fringe parking lots and/or city transit systems that carry people to the vicinity of, but not directly to, major campus destinations.

Moreover, like commuter bus systems, campus shuttles are a kind of service which does not fit the urban mass transportation model of complementary paratransit comfortably. Given the composition of university communities, the likelihood of significant numbers of individuals in eligibility categories one and three is low. The public policy reasons for complementary paratransit in other fixed route settings have a good deal less force here. The costs of planning and implementing a complementary paratransit system at a university is less likely to be balanced by providing significant amounts of needed service than in a more typical urban mass transit context.

The planning apparatus commonly assumed to be involved with urban mass transit systems is not likely to be found in such a setting. As a result, the planning requirements of subpart F do not fit the campus context well, making it likely that compliance with the planning requirements would be—both for the 1500+ institutions that could be involved and for UMTA—a paper exercise of limited value.

Requiring complementary paratransit of public universities would also create an unjustified distinction between public and private universities, which should be similarly situated in terms of meeting the transportation needs of members of their university communities. If the latter operate fixed route service, they have to acquire accessible vehicles or (with respect to vehicles with a capacity of 16 persons or less) demonstrate equivalent service. They do not have to provide paratransit. In the Department's view, the implementation of the statute is more reasonable, and more consistent with Congressional intent, if we regard public university fixed route service as commuter service. This will result in congruent requirements for public and private institutions of higher education.

One interesting comment described a student owned and operated transit system serving one state university, and expressed concern that applying public entity requirements to it could make operational costs prohibitive. The information in the comment was not sufficient to determine how under the regulation this system would be categorized. This and other unusual situations are best addressed on a case-by-case basis.

This section also restates the point that private university-operated transportation systems are subject to the provisions for private entities not primarily engaged in the business of transporting people.

Section 37.27 Transportation for Elementary and Secondary Education Systems

There was no counterpart to this section in the NPRM, but we have included it for clarity. "Public school transportation" is explicitly excluded from the definition of "designated public transportation." In addition, this section provides that if a private school gets Federal financial assistance, is covered by section 504, and provides equivalent transportation service to students with disabilities, it too is exempt. (*See* H. Rept. 101–485, Pt. 1, at 36) Even if a private school is not exempt under the section's criteria, it is subject only to the requirements for private entities not primarily engaged in transporting people.

Section 37.29 Private Providers of Taxi Service

There was no counterpart to this provision in the NPRM, but a few comments asked for clarification on taxi service. One issue concerned whether taxi fleets should have to include some accessible vehicles. Under the ADA, private entities primarily engaged in the business of transporting people and providing demand responsive service (the category that includes taxis) are not required to buy accessible automobiles. Such entities are required to purchase accessible vans, unless the entity can demonstrate that it provides equivalent service. But nothing in the statute requires an entity to acquire a van; if a taxi company acquires only automobiles, it need never obtain an accessible vehicle.

A disability group commented that, nevertheless, a taxi company is not accessible when viewed in its entirety if it does not have access to accessible vehicles (either in its own fleet or through arrangements with other entities). Therefore, the commenter said, such access to accessible vehicles should be required. We recognize that the availability of accessible taxi service is important to individuals with disabilities, and believe that, as a matter of policy, greater accessibility of taxi fleets should be encouraged. Given the absence of specific statutory language requiring a mix of accessible vehicles in taxi fleets, we believe that to impose such a requirement based only on a general concept of "accessible in its

entirety" would be inappropriate. Consequently, we have decided not to adopt this suggested requirement.

A taxi association commented that, for purposes of determining whether a taxi company was providing equivalent service, equivalency standards should be adjusted for different kinds of vehicles. The commenter suggested that vans may respond to calls less quickly than automobile taxis, for example. It is not at all clear that this premise is correct: Vans appear to get around just as quickly as other vehicles. In any event, adjusting equivalency standards for different kinds of vehicles seems extremely difficult to do in a rational way, so we will not attempt it.

Section 37.31 Vanpools

In the NPRM, the Department offered its preliminary view that public vanpools should be subject to the demand responsive system requirements for public entities, while private vanpools would be subject to title III requirements. The preamble noted the legislative history statements to the effect that volunteer-driven commuter ridership arrangements were not intended to be covered under title III.

There were a variety of comments on vanpool issues. Some commenters thought vanpools should be characterized as demand responsive, others thought they should be regarded as fixed route, and others would describe them as a hybrid category. A number of commenters emphasized that, given the economics of ride sharing, it would not take much of an increase in the price of a van or a decrease in the van's seating capacity to make vanpooling economically unattractive to participants. Some public vanpool operators mentioned that they already acquire a small percentage (e.g., 5 percent, for one system) of accessible vans for use by individuals with disabilities.

Those who commented that vanpools did not fit neatly either of the statutory categories seem closest to the truth. On one hand, a vanpool system serves a limited number of people, all of whom request to be part of the service. The routes may change over time in response to people joining or leaving a particular vanpool. The driver is a fellow commuter, not an employee of a separate public or private entity. On the other hand, no one has to make a call to get a ride on a particular day, and the van usually follows a given route of pickup and dropoff points which it attempts to meet at specific times. On balance, the Department believes that it is more reasonable to treat such a system as a demand-responsive system, meaning that it must acquire accessible vehicles unless it can demonstrate that it provides equivalent service to passengers with disabilities.

The demonstration of equivalency can be made if accessible vehicles are made available for vanpools of which a member is an individual (or membership is sought by an individual) with a disability. This is a system that public vanpool commenters say that, in effect, they use. We are not requiring that public vanpool systems acquire a certain percentage of accessible vehicles, only that they meet accessibility needs as they occur.

Private vanpools are not covered. This decision is responsive to the legislative history concerning volunteer-driven ridesharing arrangements.

Section 37.33 Airport Transportation Systems

The NPRM preamble asked how the Department should regard transportation systems operated by public airports. Public airports are clearly public entities; to the extent that their transportation systems (e.g., shuttles from fringe parking lots, connector service to the metropolitan areas they serve) are fixed route, and the accessible vehicle acquisition and complementary paratransit obligations of title II would seem to apply. Yet the relevance of these requirements—especially paratransit—seems questionable in the airport context.

Airport commenters noted that they typically made close-in parking spaces available to passengers with disabilities at fringe lot prices, making accessible transportation to fringe lots unnecessary. They asked that this solution be approved in the final rule. An airport operator which operates a connector service between its airports and to the metropolitan area described at length the problems that complementary paratransit could cause. Disability community commenters, on the other hand, said that there never seemed to be enough vacant close-in parking spaces, that there were often barriers between the close-in lot and the terminal, and that this solution did not address some individuals with disabilities who come to airports (e.g., persons with disabilities who arrive in a non-disabled friend's car, which does not have the proper license plate to park in a "handicapped space"). They also pointed to the language of the ADA which categorically requires certain things of fixed route systems operated by public entities.

The Department has concluded that the most reasonable solution, and the one that most accurately reflects the real nature of airport transportation services, is to categorize airport shuttle or connector services as fixed route commuter bus service. As discussed in the preamble section on the definition of "commuter bus," service like airport shuttle and connector service shares several important characteristics with commuter bus service, while being quite different in its operating characteristics from urban mass transit bus service. The result of this categorization is that airport systems will have to acquire accessible vehicles but will not have to provide complementary paratransit.

Another form of transportation found at many airports is private shuttle or jitney service which serves a variety of locations in the metropolitan area served by the airport, typically in a route deviation or other variable mode. The Department believes that these services are best characterized as operated in a demand responsive mode by private entities primarily engaged in the business of transporting people. As such, these operators must either acquire accessible vehicles or provide equivalent service. In response to discussion at the Advisory Committee meetings, the rule points out that equivalency requirements for such operators may be met by a group of such private operators who share or pool accessible vehicles among them in a way that ensures the provision of equivalent service.

Some airports or airlines also may operate other kinds of transportation systems, such as the electric carts that are available to assist passengers in moving through concourses and mobile lounges that take passengers from a terminal to an aircraft or another terminal. Like all services to the public, these systems are subject to ADA requirements. However, the Department did not raise issues about such systems in the NPRM and received no comment about them. Nor are they specifically covered in the Access Board guidelines. It would therefore be inappropriate to issue final rules on these systems, which may present somewhat different accessibility problems than other modes of transportation. The Department intends to address these systems in forthcoming amendments to its Air Carrier Access Act and section 504 rules.

Section 37.35 Supplemental Service for Other Transportation Modes

This section responds to comments on a variety of subjects. A disability commenter mentioned that the rule should specify coverage for bus service which intercity rail operators may

provide from a station to a nearby city. A commuter rail operator said that its dedicated bus service to the rail system (limited to rail users, with through ticketing) should be regarded as a commuter bus system. Other commenters mentioned situations in which entities such as cruise ship operators provide a shuttle or connector service (e.g., between an airport and a dock).

For the same set of reasons cited in the discussions of the definition of commuter bus and airport transportation systems, we have determined that it is reasonable to categorize the systems run by intercity or commuter operators as fixed route commuter bus systems. The privately operated systems operated by public accommodations would be regarded as operated by private entities not primarily engaged in the business of transporting people.

Section 37.37 Other Applications

The first issue considered in this section is that of private entities which have a relationship with a public entity other one covered under the "stand in the shoes" provision of § 37.23. For instance, a private bus company may get an operating subsidy from a state, a jitney service may have a franchise from a city to operate on a certain route, and taxis and other private transportation services are often regulated by state and local governments.

Comments from disability groups generally urged that, particularly in the case of subsidies, these entities be subject to public entity rules. Without the subsidies, the comments reasoned, the service would not be economical to provide, so the existence of the service becomes, to a large extent, a public creature. Comments from private transportation providers took the opposite tack, saying that receipt of a subsidy did not transmute a private entity into a public entity and that application of public entity requirements (especially complementary paratransit) would lead to the abandonment of service.

In the Department's view, the statute requires that (aside from the "stand in the shoes" situation of § 37.23) we look to the nature of the entity itself, not to its relationship with other entities, to determine the proper provisions to apply. The statute itself defines a public entity. Something that is a private entity, and hence does not come within the public entity definition, cannot appropriately be categorized as a public entity under the rule. Consequently, this section provides that a private entity that receives a state or local subsidy or a franchise from a public entity, or is regulated by a public entity, is not for that reason regulated under Title II.

Public accommodations subject to the DOJ Title III regulations (e.g., hotels, car rental agencies, historical or theme parks) are the classic examples of private entities not primarily engaged in the business of transporting people. They do, in many instances, provide shuttles and other transportation services to people. The only question to consider is whether these systems are demand responsive or fixed route.

The only comments to focus on this issue were from two major car rental organizations. They argued that the regulation should explicitly provide that systems organized like theirs were demand responsive. Their arguments were based principally on the premise that a rental car reservation is the equivalent of a user-initiated request for shuttle service and on factual assertions that the companies in question do not in fact have schedules or set intervals for their shuttle services. During a discussion of this issue in the Advisory Committee involving one of the commenters, disability group representatives questioned the accuracy of these assertions, based on their experience as customers.

The Department is very willing to believe that some car rental shuttles operate in a demand responsive mode. As the two commenters themselves noted, however, some car rental shuttles may operate as fixed route systems. The Department has not made an independent investigation of the facts concerning the variety of shuttles operated by car rental agencies or other public accommodations. The issue is likely to be affected by many site-specific circumstances. It is not clear that, as a general matter, a call to reserve a rental car can fairly be equated to a call reserving van transportation. The final rule recognizes the need for case-by-case determinations, and provides that demand-response or fixed routes rules, as appropriate, applying each case. The possibility of variety in specific operational circumstances is too great to allow for an across-the-board rule.

Another situation about which a few commenters inquired concerns conveyances people ride, not so much as a means of getting from Point A to Point B, but as a recreational activity or close adjunct to a recreational activity. Amusement park rides, ski lifts, and historic trolley or rail cars operated in museum settings are examples of such conveyances. In our view, it makes sense to regard these conveyances not as "transportation" at all, but simply as one part of public accommodations provided by the entities in question. This does not mean that these conveyances escape ADA regulation; DOJ regulations under title II or title III of the ADA cover them.

Transportation services offered by employers (e.g., motor pool vehicles, employer-sponsored van pools or shuttle services which are limited to employees) are another category this section clarifies. Such employee transportation is not part of a public accommodation or designated or specified public transportation. It does not come within the scope of sections 222, 224, 302 or 304 of the ADA. It would, however, be covered by title I of the ADA (and, with respect to public entities title II as well) since it is a term, condition, or benefit of employment. The EEOC and DOJ Title II ADA rules cover such services.

One commenter asked that the rule specifically mention that the transportation provisions of the ADA do not apply to religious organizations. We have done so; such services are not covered by the ADA.

The Department also was asked for clarification of situations in which a parent company is not primarily engaged in the business of transporting, but a subsidiary or division is primarily so engaged. To which organization does one look in deciding which set of ADA requirements apply? The Department believes that it is most consistent with the ADA to look at the entity that is actually providing the transportation—even if this entity is a smaller part or subsidiary of a larger organization. When there is not actually a separate subsidiary company involved, a "primarily engaged" segment of the larger company that is operationally distinct from the rest of the company is relevant for this purpose.

The ADA defines intercity rail as service provided by Amtrak. There may be present or future rail systems which provide service having all the characteristics of intercity service except operation by Amtrak. For example, planning is now underway for a number of high-speed rail systems. In addition, DOT is aware of a private intercity rail service which attaches private rail cars to Amtrak trains on some routes. Other private intercity rail services could be created in the future.

High-speed rail service, as it is envisioned, shares so many operating characteristics with intercity rail service that we believe it is sensible to apply intercity rail requirements to it. For high-speed rail systems operated by public entities, the rule would apply intercity rail requirements to such systems. For private rail systems, § 37.107 governs

acquisition of rail cars, while facilities and other matters are subject to DOJ Title III rules. Both for rail cars and rail facilities, these requirements apply to private rail systems the requirements of ATBCB guidelines.

Subpart C—Transportation Facilities

Section 37.41 Construction of Transportation Facilities by Public Entities

Section 37.41 contains the general requirement that all new facilities constructed after January 26, 1992, be accessible to and usable by individuals with disabilities. This provision tracks the statute closely, and is analogous to provisions in the DOJ regulations. Section 226 of the ADA provides little discretion concerning this requirement. There were no comments on this provision and the final rule makes no changes to the proposal.

Section 37.43 Alteration of Transportation Facilities by Public Entities

This section sets out the accessibility requirements that apply when a public entity undertakes an alteration of an existing facility. In general, the section requires that any alteration undertaken to an existing facility, to the maximum extent feasible, result in the altered area being accessible to and usable by individuals with disabilities, including persons who use wheelchairs. As noted in the proposed rule, the provisions follow closely those adopted by the DOJ, in its regulations implementing title III of the ADA (49 CFR part 36, July 26, 1992, 56 FR 35544). Also noted in the proposed rule, we made minor changes to the DOJ language for purposes of specific references to transportation facilities—e.g., references to intercity and commuter rail stations.

As proposed, the section would require specific activities whenever an alteration of an existing facility is undertaken. These include:

(1) If the alteration is made to a primary function area, (or access to an area containing a primary function), the entity shall make the alteration in such a way as to ensure that the path of travel to the altered area and the restrooms, telephones and drinking fountains servicing the altered area are readily accessible to and usable by individuals with disabilities, including individuals who use wheelchairs.

(2) Alterations to drinking fountains, telephones, and restrooms do not have to be completed if the cost and scope of making them accessible is disproportionate.

(3) The requirement goes into effect for alterations begun after January 25, 1992.

(4) The term "maximum extent feasible" was defined to mean that all changes that are possible must be made.

(5) Primary function was defined to mean a major activity for which the facility is intended. The proposed rule contained a non-exclusive list which included the following areas in the primary function area: Ticket purchase and collection areas, train or bus platforms, baggage checking and return areas, and employment areas.

(6) The proposed rule defined "path of travel" to mean a continuous, unobstructed way of pedestrian passage by means of which the altered area may be approached, entered, and exited, and which connects the altered area with an exterior approach and includes restrooms, telephones, and drinking fountains serving the altered area. If changes to the path of travel are disproportionate, then only those changes which are not disproportionate are to be completed, and;

(7) The final rule proposed a range of costs for determining when an alteration is disproportionate. The three percentages were 10 percent, 20 percent and 30 percent.

The preamble to the proposed rule also stated that the Department would remain consistent with the DOJ in this area (and forward any comments on this section to them for review). Over 25 comments were submitted on this section, principally from older rail providers and disability groups. The provision that drew the most comment was the percentage to be used to determine disproportionality. The majority of commenters (principally transit providers) recommended that the figure be 10 percent. Those recommending 10 percent indicated that this figure should be used since many of the providers will be using all available resources to meet the key station requirements under the ADA.

Several commenters (including disability groups and some transit providers) recommended either 20 or 30 percent. One person with disabilities recommended that no percentage by used, and that the exception to full accessibility be granted only when undue financial hardship is demonstrated. Some transit industry commenters recommended that the disproportionality rule apply as a percentage of the passenger service area that is scheduled for alteration (and not apply to alterations of railbeds and the like).

A person with a disability expressed concern over how costs are counted in determining disproportionality. This concern is what might be called "goldplating", lumping the entire cost of a change into the cost of making the item accessible (e.g., counting the cost of complete new doors and frames instead of counting only the cost of replacing smooth knobs with levers). Another commenter stated that providers who do not charge a fare for persons using wheelchairs or the blind should not be required to make ticket purchase areas accessible.

As we said in the preamble to the proposed rule, the Department is following the decision reached by the DOJ in determining an equitable percentage of work to be done. DOJ, in its final rule for public accommodations, specifies that the applicable percentage shall be 20 percent of the alteration. The Department continues to concur in the rationale and result promulgated by DOJ, and we accordingly have adopted 20 percent in our final rule as well. We agree with the comment, however, that the base changes should be based on changes to the passenger service area that is scheduled for alteration, and that "goldplating" not be allowed. The preamble to the DOJ final rule contains a discussion of this decision, and we recommend it for more background on the decision.

The requirement to make changes to the maximum extent feasible drew several comments as well. One commenter recommended that the definition be expanded beyond the limited area of physical impossibility. A person with disabilities thinks that much of the difficulty with the concept of "feasibility" could be avoided if "such decisions at the local level include as participants representatives of the disabled community. There seems to be an inordinate amount of reluctance to consult persons within the disabled population, but many of us have a great deal of skill at finding the most cost effective method for getting rid of architectural barriers."

The Senate Report provides guidance on what the phrase "maximum extent feasible" means—

> The phrase "to the maximum extent feasible" has been included to allow for the occasional case in which the nature of an existing facility is such as to make it virtually impossible to renovate the building in a manner that results in its being entirely accessible to and usable by individuals with disabilities. In all such cases, however, the alteration should provide the maximum amount of physical accessibility feasible.
>
> Thus, for example the term "to the maximum extent feasible" should be construed as not requiring entities to make building alterations that have little likelihood

of being accomplished without removing or altering a load-bearing structural member unless the load-bearing structural member is otherwise being removed or altered as part of the alteration. (S.Rept. 101-116, at 68).

The Department has not made changes to the final rule regarding the term "maximum extent feasible". Our definition of the term is consistent with that of the DOJ, whose rationale we concur with and support.

The definition of "to the maximum extent feasible" contained in the DOJ rule also points out that "[I]f providing accessibility in conformance with this section to individuals with certain disabilities (e.g., those who use wheelchairs) would not be feasible, the facility shall be made accessible to persons with other types of disabilties (e.g., those who use crutches, those who have impaired vision or hearing, or those who have other impairments." (28 CFR 36.402(c), 56 FR 35600, July 26, 1991).

A few commenters recommended that we add waiting areas to the list of examples included to show the kinds of areas included in "primary function". The Department has added waiting areas.

Finally, several comments asked the Department to define the term "begin", in the context of "begin an alteration" that is subject to this provision. Other commenters noted that we used the term "begin" and "make" in the same section and sought clarification whether they mean the same.

The final rule includes a definition of "begin" in the context of alterations to mean when a notice to proceed or work order is issued. Two terms are used (instead of only notice to proceed as in the context of new construction) because many alterations may be carried out by the entity itself, in which case the only triggering event would be a work order or similar authorization to begin.

The Department has removed the word "make" from the text of this provision and replaced it with "begin" to avoid confusion.

Section 37.45 Construction and Alteration of Transportation Facilities by Private Entities

This section provides a cross-reference to the DOJ regulations that implement title III of the ADA (28 CFR part 36), since construction or alteration of a transportation facility by a private entity is covered by the DOJ regulation, not DOT's. There were no comments on this section and no change has been made to the proposed rule.

Section 37.47 Key Stations in Light and Rapid Rail Systems

Section 37.51 Key Stations in Commuter Rail Systems

The issues and comments related to key stations were very similar for both these sections, so we discuss them together.

The NPRM set out several criteria for rail operators to consider in designating key stations. Despite an explanation to the contrary in the preamble, a number of commenters appeared to think that the criteria were mandatory (i.e., that every station that fit one of the criteria was required to be designated as a key station). We have added language to the rule to clarify further the point that the criteria are to be taken into consideration, but are not mandatory criteria in this sense.

One commenter asked that if the local community agreed that there were no key stations on a rail line that needed to be accessible (e.g., because there was accessible bus service in the area), it should be regarded as acceptable not to make key stations accessible (or at least to apply the extended timetable). The Department does not agree with this suggestion. Key station accessibility to commuter rail lines is required by the statute, regardless of the accessibility of bus service in the area (indeed, under the statute, all bus service eventually will be accessible). The 30-year extended time frame is available only where extraordinarily expensive changes are required to make a station accessible.

One commenter asked that pre-existing local agreements related to the designation of key stations be honored under the rule. The cases of such agreements in New York and Philadelphia are handled separately (see § 37.53). Otherwise, the full planning process called for by the ADA applies.

There were relatively few comments on the specifics of the key station criteria themselves. One that came up in several comments was that "unless close to another accessible station" should be added to the criterion concerning high ridership stations. We have added this language and note that "close" is a relative term. What is close in downtown Boston, for example, may not be close in a more suburban setting.

There were a number of comments concerning the key station plans. Under the ADA, rail operators must prepare such plans and forward them to the Department. DOT approval is not required, however. Some commenters, appearing to believe that DOT approval is necessary, said that DOT should commit to reviewing the plans within 90 days. While expeditious review of plans is always desirable, the Department does not believe it is necessary to commit to a specific review deadline, particularly for a plan it need not approve.

Under the statute, key stations must be made accessible by July 26, 1993. However, extensions of up to 30 years (light and rapid rail) or 20 years (commuter rail) can be made for "extraordinarily expensive" accessibility modifications. There were a substantial number of comments on how these provisions should be construed.

Some disability group comments suggested that, in key stations, changes that were not themselves extraordinarily expensive should be made by July 1993, even in stations which had been granted extensions of the deadline based on the need for extraordinarily expensive changes. Rail operators' comments disagreed, some stating that non-extraordinarily expensive modifications should not have to be made by July 1993 if the key station plan, with public participation, provides a different timetable. It was unrealistic to have to make these modifications by that date, some felt, so DOT should prioritize the modifications.

Another suggestion was that the "extraordinarily expensive" standard should be applied system-wide rather than on a station-by-station basis. That is, the cumulative costs of making changes that, considered individually, are non-extraordinarily expensive, should be able to be viewed as extraordinarily expensive and subject to the extension. Finally, there were comments from both disability groups and rail operators concerning the use of mini-high platforms to make key stations accessible. The former thought that the use of mini-highs should be regarded as non-extraordinarily expensive and the latter disagreed.

As in many other portions of the ADA, the statutory language on this subject is quite specific and explicit, and the Department has the responsibility to implement the provisions as Congress wrote them. Under Section 227(b)(2)(B) of the statute, the Department may extend the July 1993 accessibility deadline for up to 30 years for light and rapid rail "key stations * * * which stations need extraordinarily expensive structural changes to, or replacement of, existing facilities." For commuter rail systems, under Section 242(e)(2)(A)(ii)(II) of the ADA, an extension of up to 20 years may be granted "in a case where the raising of the entire passenger platform is the only

means available of attaining accessibility or where other extraordinarily expensive structural changes are necessary to attain accessibility." While the wording of the two provisions is slightly different, the effect, under the Department's construction, is the same.

Under the statute, for light and rapid rail, extensions of the deadline for accessibility may be granted for "key stations * * * which stations" need extraordinarily expensive changes. For commuter rail systems, an extension may be granted "in a case where" raising the platform or other extraordinarily expensive modifications are necessary to attain accessibility. Accessibility is a term that includes both extraordinarily expensive and non-extraordinarily expensive changes. If an extension is granted because extraordinarily expensive changes are needed to the station, the extension consequently applies to all accessibility modifications for that station.

It is clear from the statutory language and from the legislative history that the statute includes only a "narrow exemption [to the July 1993 deadline] for facilities where the only means of creating accessibility would be to raise the entire platform * * * or install an elevator." (S. Rept. 101–116 at 56). The Department believes that it is reasonable to construe the statute to permit changes other than raising the entire platform or installing an elevator as potentially being "extraordinarily expensive," but only if their cost and magnitude are in the same range as elevator installations or platform raisings. For example, if the cost of installing a mini-high platform is in that range, it could be considered an extraordinarily expensive change. If not, then the mini-high platform would have to be installed by July 1993.

The statute clearly requires accessibility by July 1993 except for stations where an "extraordinarily expensive" extension is granted. Just as this rule cannot amend the statutory mandate, a key station plan, even if warmly endorsed by all interested parties, cannot amend the statutory mandate. In stations where the compliance deadline is not extended, operators are required to make accessibility modifications by July 1993. It should be noted as well that, in determining extension periods for light and rapid rail stations, the Department has an obligation under the ADA to ensure that at least two-thirds of the stations are accessible within 20 years.

The Department also construes the extension provision to be station-specific in its effect. Extensions are possible for "key stations * * * which stations" need extraordinarily expensive modifications or "in cases" where the entire commuter rail station platform must be raised. The fact that the cost of all modifications throughout the system other than platform raisings or elevator installations, taken together, may be as expensive as one or more platform raisings or elevator installations, does not create a "case" or a "station" which needs extraordinarily expensive changes. To adopt this comment would be to expand the scope of the extension provision beyond what the statute provides.

One comment from a rail operator said that, in non-key stations, it should not be necessary to make accessibility modifications. The statute requires that, when facilities are altered, certain accessibility modifications be made (see § 37.43). This is true of all facilities, not just key stations. Another comment suggested that a lower "disproportionality" percentage apply to key station modifications than to other alterations. This comment misunderstands the relationship between the alteration provisions of § 37.43 and this section. As the commenter says, the key station requirement is a special retrofit requirement. It tells rail operators to make their key stations accessible, even where it is extraordinarily expensive to do so. The disproportionality provision of § 37.43 does not apply to key station modifications at all; if it did, no one would ever have to raise a platform or install an elevator. Disproportionality applies to modifications triggered by alterations made by the entity at its discretion, not to station retrofits mandated by the key station requirement.

Comments from disability groups stressed the importance of public participation and disability community involvement in key station planning. The regulation clearly requires this involvement.

Section 37.49 Designation of Responsible Persons for Intercity and Commuter Rail Stations

This is one of the more obscure and complicated provisions of the statute. Its intent is to allocate responsibility for making accessibility modifications "on an equitable basis" among public entity station owners and Amtrak and commuter railroads that operate through a station (H. Rept. 101–485, part 4). The House Energy and Commerce Committee recommended that the Department apply "the principle of 'costs to the cost-causer' " and take other sound economic, transportation, and public policy considerations into account (*Id*). The statute clearly exempts private entities (e.g., freight railroads) from any share in the legal and financial responsibility for accessibility modifications.

The very specific statutory language defining "responsible person" may well result in inequitable treatment among public entity station owners and passenger railroads in some situations, however. In the situation where a public entity owns more than 50 percent of the station, that entity is the responsible person for the total costs of station modification, while passenger railroads (who may own 49 percent of the station and operate train service through it) are not obligated for any share of the responsibility. In the situation where a private entity owns more than 50 percent of the station, by contrast, a public entity which owns 49 percent of the station is not obligated for any portion of the responsibility. Only railroads running trains through the station are obligated. In the third situation, in which no one owns more than 50 percent of the station, both public entity owners and railroads operating trains through the station have obligations.

In attempting to devise regulatory provisions allocating responsibility in an equitable manner, the Department must work within these statutory constraints. For this reason, we cannot make changes to accommodate comments that private railroads should be obligated for a share of the responsibility or that public entities owning more than 50 percent of a station should, as a matter of regulation, be entitled to contributions from railroads running service through the station.

The NPRM proposed allocating costs among railroads using passenger boardings, in the belief that this measure most aptly captures cost causation. There were a few comments on this proposal. Two suggested that the Department should not set forth any allocation formula, for fear it would skew negotiations among the parties. Instead, one of these comments said, we should require an agreement among the parties, with DOT arbitration in the case of impasse. The statute requires our regulations to allocate responsibility. Moreover, while we strongly believe parties should negotiate an agreement concerning responsibility, a DOT arbitration role in a variety of local disputes among parties seems impracticable.

Other comments pointed to the multiplicity of ownership arrangements in stations and suggested that any

allocation formula is bound to fit many situations awkwardly. This may well be true, and is further reason to encourage parties to negotiate. However, an allocation standard based on cost causation is called for under the ADA, and we are obligated to establish such a mechanism. No comments suggested that using passenger boardings was not reasonably related to cost causation, or that some other criterion would work better.

Finally, a commuter rail operator said that in one situation, it owned a station which Amtrak also uses. The station would not be a key station, and so must become accessible only because it is an intercity station. In this situation, the commuter operator said it should not be a responsible person. As mentioned above, the statute is quite clear on who is a responsible person, and this may be a situation in which the effect of the clear provisions of the statute seems inequitable to one of the parties. Again, negotiation between the parties may be helpful.

In the interest of greater equity in situations where no party owns more than 50 percent of a station, the Department has made one modification to the proposed rule. That modification divides the responsibility for such a station in half between public entity owners (whether or not they are railroads running service through the station) and railroads running service through the station (whether or not they also own part of the station). Responsibility among the former is divided based on proportion of station ownership; among the latter, responsibility is allocated on the basis of passenger boardings. A party that is both a station owner and a railroad running through the service would have a portion of the responsibility on each side of the equation. The purpose of this modification is to give appropriate weight to both sets of factors that count in determining responsibility.

Section 37.53 Exception for New York and Philadelphia

This section formally recognizes that agreements concerning key station accessibility in New York City and Philadelphia have identified key stations, which designations were intended to be recognized as complying with ADA key station selection requirements.

As suggested by a comment from one of the transit providers involved in the New York agreement, the entities involved can limit their key station planning process to issues concerning the timing of key station accessibility. This entity also commented that modifications already made under their agreement should be grandfathered, so that they do not need to be re-modified to conform to Access Board guidelines. The section references § 37.9, which addresses this concern. Under § 37.9, key station accessibility alterations conforming to specified prior standards do not have to be re-modified, and alterations begun after January 26, 1992 (including forthcoming key station modifications under the New York and Philadelphia agreements), must meet the requirements of appendix A to this part.

Section 37.55 Intercity Rail Station Accessibility

There were few comments concerning this section, which is taken directly from the statute. The final rule version is not changed from the NPRM.

Section 37.57 Required cooperation

There were few comments concerning this section, which is taken directly from the statute. The final rule version is not changed from the NPRM.

Section 37.59 Differences in Accessibility Completion Date Requirements

Commenters to various facilities accessibility provisions of the NPRM noted that the same station, or portions of the same station, may have different accessibility completion date requirements. For example, if a station serves both rapid and commuter rail systems, there is a potential for the accessibility deadline to be extended to 2010 for commuter purposes and 2020 for rapid rail purposes. A similar situation could occur if an extension were granted to a station for commuter rail purposes but not for rapid rail purposes, or if extensions of different lengths (e.g., 5 and 10 years) were granted. Commenters on this subject (mostly from the disability community) said that in such a case, the earlier deadline should prevail.

Though in considering extensions the Department will attempt to avoid such situations, it is reasonable to have a regulatory provision clarifying the matter. The principle at work here is that if part of a station can be made accessible after another part, the "late" part of the work should not get in the way of people's use of the "early" part. Consequently, common elements of the station, parts of the facility serving the rail system with the earlier completion date, and an accessible path from common elements to the portion of the facility serving the rail system with the earlier completion date would have to be completed by the date for the "early" portion of the work.

Section 37.61 Public Transportation Programs and Activities in Existing Facilities

Proposed § 37.35 implements section 228(a) of the ADA and establishes the general requirement for entities to operate their transportation facilities in a manner that, when viewed in its entirety, the program or activity is accessible to and usable by individuals with disabilities. The section clearly excludes from this requirement access by persons in wheelchairs, unless these changes would be necessitated by the alterations or key station provisions.

This provision is intended to cover activities and programs of an entity that does not rise to the level of alteration. Even if an entity is not making alterations to a facility, it has a responsibility to conduct its program in an accessible manner. There were several comments submitted on this proposal, making specific suggestions about what this nondiscrimination provision should include. Several commenters recommended that the Department prescribe what must be done in each facility to meet this non-discrimination provision. An identical list of proposed modifications was submitted by two organizations. Their suggestions include:

—Farecards, schedules, and other services which are available in a facility that is not wheelchair-accessible must be made available in some other way, if the farecards, schedules, and other services pertain to portions of the transit program which could be used by such persons.

—Some means of edge detection on rail platforms should be provided for the safety of all patrons including those with visual impairments, in compliance with the Architectural and Transportation Barriers Compliance Board (Access Board)'s proposed transit facility standards, 10.3.1 part (12).

—Adequate lighting should be provided to assist all patrons including those with visual impairments, in compliance with the Access Board's proposed transit facility standards, 10.3.1 part (12).

—Telecommunication Display Devices (TDD's) should be available for use by deaf and speech-impaired persons, in compliance with the ATBCB's proposed transit facility standards, 10.3.1 part (13).

—Signage should be accessible to people with visual impairments, in compliance with the ATBCB's proposed transit facility standards, 10.3.1 parts (6), (7), and (8).

—Pathways should be continuous to assist all patrons including those with visual and ambulatory impairments, in compliance with the ATBCB's proposed transit facility standards, 10.3.1 part (14).

—Public address systems and clocks shall be accessible to assist all patrons including those with sensory impairments in compliance with the ATBCB's proposed

transit facility standards, 10.3.1 parts (15) and (16).

Other comments included more general recommendations that certain accessibility features be provided, such as edge detection on rail platforms, adequate lighting, TDD's, signage, and public address systems and clocks.

We agree with the commenters that these or similar changes should be done to make facilities more "user friendly". We do not, however, believe the Department should prescribe one list of things that would be appropriate for all stations. For example, we believe that tactile strips are a valuable addition to platforms which have drop-offs. We also believe that most larger systems, to the extent they publish schedules, should make those schedules readily available in alternative formats. We do not believe, however, that there is one correct list. We encourage entities to find this another area which benefits from their commitment to far-reaching public participation efforts.

Subpart D—Acquisition of Accessible Vehicles by Public Entities

Section 37.71 Purchase or Lease of New Non-Rail Vehicles by Public Entities Operating Fixed Route Systems

Section 37.51 of the NPRM set out the basic acquisition requirements for a public entity purchasing a new vehicle. The proposal was the same as the final rule issued by the Department on October 4, 1990, to implement the vehicle acquisition requirements that went into effect August 26, 1990. Generally, the section requires any public entity which purchases or leases a new vehicle to acquire an accessible vehicle. There is a waiver provision if lifts are unavailable and certain other criteria are met. The proposed rule indicates that any waiver would be for a temporary period only, and that the vehicles would have to be retrofitted with the lifts as soon as they were available.

In the April proposal, the Department sought comment on two proposed rule provisions. The first would require a public hearing before a waiver request is submitted to UMTA. The second issue flagged for comment was the possible action to be taken by the Administrator in cases where an entity fraudulently applies for a waiver; sanctions include canceling the waiver and other appropriate action.

The comments almost unanimously supported requiring a public hearing before public entities could request a waiver. Although many fewer persons commented on the sanctions provision, those who did comment agreed with the provision. Both the public hearing provision and possible sanctions provision have been retained in the final rule. There is no change in the proposed rule language.

Section 37.73 Purchase or Lease of Used Non-Rail Vehicles by Public Entities Operating a Fixed Route System

The NPRM provision is almost identical to the October 4, 1990, final rule implementing the acquisition requirements of the ADA that went into effect on August 26, 1990. As with new vehicles, an acquisition of a used vehicle would have to be for an accessible vehicle. The proposal included an exception, for situations in which the transit provider makes a good faith effort to obtain accessible used vehicles but does not succeed in finding them. The section specifies what would constitute a good faith effort, and requires that the entity retain for two years documentation of that effort, and that the information be available to UMTA and the public.

Three comments were submitted on this provision. One commenter noted agreement with the section as written. Two comments wanted the Department to specify that good faith efforts should include notification of the entity's advisory committee, retention of records for 5 years, and establishment of a national clearinghouse for used vehicles. While the Department agrees that, in practice, it may be a good idea for an entity to retain these records for five years, we believe that a shorter period is adequate to ensure compliance with the provision. However, in order to ensure that records remain on file at the time of UMTA's triennial reviews of transit authorities, we are extending the record retention period to three years.

With regard to the request that the entity be required to notify its "advisory committee", we also do not think that this is necessary. The public participation requirements involved in the development of the paratransit plans for all fixed route operators requires an ongoing relationship, including extensive outreach, to the community likely to be using its accessible service. We believe that it will be difficult to comply with the public participation requirements and not maintain a dialogue with the affected community.

We note, however, that the regulation does not specify the establishment of an advisory board *per se*. We do require effective communication on the part of all concerned. Finally, at this time the Department has not provided for any type of national clearinghouse. There are several industry publications which provide adequate opportunity for this type of information sharing.

Section 37.75 Remanufacture of Non-Rail Vehicles and Purchase or Lease of Remanufactured Non-Rail Vehicles by Public Entities Operating Fixed Route Systems

The April 4, 1991, proposed rule provision is the same as the final rule provision of October 4, 1990, implementing the provisions of the ADA that went into effect on August 26, 1990. Generally, this section tracks the statute rather closely, and contains the following provisions.

First, it requires any public entity operating a fixed route system to purchase only an accessible remanufactured vehicle if it is remanufactured after August 25, 1990. If the entity contracts or undertakes the remanufacture after August 25, 1990, the remanufacture must be accessible. The ADA and its legislative history make it clear that remanufacture includes changes to the structure of the vehicle that extend the useful life of the vehicle for five years. It clearly is not intended to capture things such as engine overhauls and smaller repairs.

The statute and the rule include an exception for the remanufacture of historical vehicles. This exception applies to the remanufacture of or purchase of a remanufactured vehicle in a case where (1) the vehicle is of historic character; (2) it operates solely on a segment of a fixed route system which is on the National Register of Historic Places; and (3) making the vehicle accessible would significantly alter its historic character. The exception only extends to the remanufacture that would alter the historic character of the vehicle. All modifications that can be made without altering the historic character (such as slip resistant flooring) must be made.

Of the two comments received, one supported the provision, and the other said UMTA should prohibit the acquisition with federal funds of any remanufactured vehicle that is not accessible.

While we agree that all vehicles should be accessible to the extent possible, the statute is very clear concerning this exception. The final rule remains unchanged from the proposal.

Section 37.77 Purchase or Lease of New Non-Rail Vehicles by Public Entities Operating a Demand Responsive System for the General Public

Section 224 of the ADA requires that a public entity operating a demand

responsive system must purchase or lease accessible new vehicles for which a solicitation is made after August 25, 1990, unless the system, when viewed in its entirety, provides a level of service to individuals with disabilities, including individuals who use wheelchairs, equivalent to the level of service provided to individuals without disabilities. The April 4, 1991 proposed rule is the same as the October 4, 1990 final rule which promulgated the immediately effective acquisitions requirements of the ADA.

Fifteen comments were submitted on this section, nearly all referring to vanpools. The most consistent response—from transit organizations—was that vanpools are a unique type of entity and should be treated as such. Others commented that some vanpools are not true public entities, since the drivers are not employees of the transit system. One respondent noted the difficulty of reconciling requirements for vanpool drivers, who take on voluntary responsibility, with requirements for drivers/operators in other forms of transit to operate lifts and securement devices. Some commented on the cost-sensitivity of vanpools and the negative impact if all vehicles must have lifts. A few respondents asked that a certain percentage of the vanpool vehicles be fitted with lifts. Others suggested that lifts be made available upon request. For the opposing point of view, two agreed with the written definition and another thought vanpools should be treated as demand responsive.

The Department has established a separate section on vanpools (§ 37.31), and these comments are discussed in the context of that section, earlier in this preamble.

One commenter requested clarification of what "accessible when viewed in its entirety" means in the context of a demand responsive system. First, it is important to note that this exception applies only to demand responsive systems (and not fixed route systems). The ADA's concept of "equivalent service" means that when all aspects of a transportation system are analyzed, equal opportunities for each individual with a disability to use the transportation system must exist. For example, the time delay between a phone call to access the demand responsive system and pick up the individual is not to be greater because the individual needs a lift or ramp or other accommodation to access the vehicle.

Consistent with Section 224 of the ADA and its legislative history (See, e.g., H.Rept. 101–184, Pt. 2, at 95; S.Rept. 101–116 at 54), the Department has specified certain service criteria that are to be used when determining if the service is equivalent. As in previous rulemakings on this provision, the standards (which include service area, response time, fares, hours and days of service, trip purpose restrictions, information and reservations capability, and other capacity constraints) are not absolute standards. They do not say, for example, that a person with a disability must be picked up in a specified number of hours. The requirement is that there must be equivalent service for all passengers, whether or not they have a disability. If the system provides service to persons without disabilities within four hours of a call for service, then passengers with disabilities must be afforded the same service. The Department has made no changes to the proposed rule.

Section 37.79 Purchase or Lease of New Rail Vehicles by Public Entities Operating Rapid or Light Rail Systems

This section echoes the requirement of § 37.71 on non-rail vehicles by requiring that all new rail cars be accessible. The April 4, 1991 proposed rule provision is the same provision that appeared in the October 4, 1990 final rule implementing the acquisition requirements of the ADA that went into effect on August 26, 1990. The only comment on this section was that newly purchased or leased monorails and people movers also should be required to be readily accessible to persons with disabilities, as are rapid or light rail systems.

These types of systems are covered under part 38, Subpart H, Other Vehicles and Systems. A detailed discussion of them may be found in the preamble to the Access Board's guidelines.

Section 37.81 Purchase or Lease of Used Rail Vehicles by Public Entities Operating Rapid or Light Rail Systems

This section lays out the requirements for a public entity purchasing a used rail vehicle. The requirements and standards are the same as those specified for non-rail vehicles in § 37.73. There were no comments on this section and the section remains unchanged.

Section 37.83 Remanufacture of Rail Vehicles and Purchase or Lease of Remanufactured Rail Vehicles by Public Entities Operating Rapid or Light Rail Systems

This section parallels the remanufacturing section for buses, including the exception for historical vehicles. The Department sought comment on two issues. First, should there be a regulatory provision requiring that, where a historic vehicle exception is requested, the applicant make good faith efforts to ensure accessibility to the vehicles by means that would not significantly alter their historic character?

Second, the Department sought comments on whether a vehicle operated within the confines of a museum, where it is an attraction rather than simply a means of getting around to other attractions should be considered to fall within the definition of designated public transportation at all. This second issue and comments submitted on it are discussed in this preamble under § 37.37, other applications.

Four out of six commenters on this section supported the inclusion of a specific good faith provision in the regulation. The Department has considered these comments, and has decided to retain the language as it existed in the proposed rule. The Department does not feel that lack of good faith will become a problem, since the exemption from making a vehicle accessible is only to the extent that the changes will damage the historic character of the vehicle. All other changes will be required to be made.

One commenter wanted clarification that remanufacturing applies only to repairs done to extend a vehicle beyond its normal life, not to the normal mid-life overhaul. This is a correct understanding. Remanufacturing extends the useful life beyond what its normal useful life would have been. The normal useful life includes within it the mid-life overhaul.

Section 37.85 Purchase or Lease of New Intercity and Commuter Rail Cars

This section incorporates the statutory requirement that new intercity and commuter rail cars be accessible. The specific vehicle accessibility provisions of the statute (for example, there are slightly different requirements for intercity rail cars versus commuter rail cars) are specified in part 38 of this regulation. The section basically parallels the acquisition requirements for buses and other vehicles. The final rule remains unchanged from the proposed rule.

Section 37.87 Purchase or Lease of Used Intercity and Commuter Rail Cars

The section also parallels closely the requirements in the ADA for the purchase or lease of accessible used vehicles. Like the provisions for other modes of transportation, the ADA does not afford the Department much discretion in this area. Two commenters endorsed the good faith provision in the

proposed rule. One state railroad administration stated that this section does not take into consideration reciprocal lease agreements between Amtrak and certain commuter rail authorities, which allow the parties to lease rail vehicles to and from each other at well below market rates, usually for short-term use. It would not be reasonable for either party to undertake a solicitation process or nationwide search when the vehicle is needed immediately in emergencies, or will be used for less than 30 days. Such lease agreements have been in place for several years, and would not be used to circumvent ADA since all parties involved are required to meet the "one car per train" provision.

The good faith efforts provision has been retained. With regard to the comment about commuter railroads leasing for a very brief amount of time cars from Amtrak, the Department does not believe the statute allows flexibility in this area. The Department will work with railroads to attempt to find means of meeting the requirement in a way that does not unduly delay transactions.

Section 37.89 Remanufacture of Intercity and Commuter Rail Cars

This section requires generally that remanufactured cars be made accessible, to the maximum extent feasible. Paragraph (c) defined "feasible" to be "unless an engineering analysis demonstrates that remanufacturing the car to be accessible would have a significant adverse effect on the structural integrity of the car."

This section also reflects two statutory differences from its counterpart for light and rapid rail cars. First, the extension of useful life needed to trigger the section is ten rather than five years. Second, there is no historic vehicle exception.

Amtrak submitted the only comment on this section, requesting that the determination of feasibility include considerations of cost and the purposes for which the car is being remanufactured. Under the statutory definition (See also H. Rept. 101–485, Pt. 4 at 51), it would not be appropriate for the Department to introduce cost considerations into the equation. If a car is being remanufactured for purposes other than to be a passenger rail car (i.e., would not be used to carry revenue passengers), then it would not be subject to requirements for passenger rail cars.

Section 37.91 Wheelchair Locations and Food Service on Intercity Rail Trains

This provision is taken directly from the statute. We have made two modifications in response to comments. First, we have removed references to "securing" wheelchairs in recognition of the fact that securement devices are not required on rail cars. Second, the NPRM referred to intercity rail operators not being required to provide more than a certain number of wheelchair locations on a rail car. A comment pointed out that the statute provides that the rail operator is not permitted to provide more than this number of wheelchair locations (in order to avoid concentrating all the wheelchair users in one car, which would be contrary to the notion of providing service in an integrated setting). We have changed the wording accordingly.

Section 37.93 One Car Per Train Rule

This section implements the statutory directive to all rail operators (light, rapid, commuter and intercity) to have at least one car accessible to persons with disabilities, including individuals who use wheelchairs by July 26, 1995. (See ADA sections 242(a)(1), 242(b)(1), 228(b)(1).) Section 37.93 specifies the general requirement that must be met. In some cases, entities will meet the one-car-per train rule through the purchase of new cars. In this case, since all new rail vehicles have to be accessible, compliance with this provision is straightforward.

However, certain entities may not be purchasing any new vehicles by July 26, 1995, or may not be purchasing enough vehicles to ensure that one car per train is accessible. In these cases, these entities will have to retrofit existing cars to meet this requirement. What a car that is retrofitted to meet the requirement must look like has been decided by the Access Board. These standards are being adopted as regulation today by the Department and are contained in part 38 of this rule. A more complete discussion of what the vehicles will have to look like can be found in the preamble discussion of part 38 to this document.

Section 37.95 Ferries and Other Passenger Vessels

As at the NPRM stage, this section continues to be reserved. Ferries and passenger vessels operated by public entities are covered by the ADA, and subject at this time to DOJ title II requirements as well as § 37.5 of this part. The Department thanks commenters on this subject for providing information and leads on where to find additional information. The Department also is planning a study with a consultant to provide data on this subject. We anticipate further rulemaking to create appropriate requirements for passenger vessels.

Subpart E—Acquisition of Accessible Vehicles by Private Entities

Section 37.101 Purchase or Lease of Vehicles by Private Entities Not Primarily Engaged in the Business of Transporting People

Section 37.103 Purchase of Lease of New Non-Rail Vehicles by Private Entities Primarily Engaged in the Business of Transporting People

Section 37.105 Equivalent Service Standard

Section 37.107 Acquisition of Passenger Rail Cars by Private Entities Primarily Engaged in the Business of Transporting People

These sections are not substantive changed from the NPRM, and (aside from comments on Access Board guidelines for vehicle accessibility, which are discussed in the preamble to the Access Board guidelines themselves and part 38) were not the subject of comment. They do, however, implement one of the more complex portions of the ADA, and the Department has restructured the sections to improve clarity, with labeled paragraphs separating out each of the various subcategories that affect what a given entity is required to do. In addition, the equivalent service standard is separated out and put in its own section, rather than being restated for each category, as in the NPRM.

Section 37.109 Ferries and Other Vessels

As with the NPRM, this section is reserved in the final rule. The reason for this action is that, at the present time, the Department lacks sufficient information to determine what are reasonable accessibility requirements for various kinds of passenger vessels. We note that the DOJ has determined that passenger vessels encompassing places of public accommodation (e.g., cruise ships, floating restaurants) are subject to the general nondiscrimination and policies and practices portions of its title III rule (Subparts B and C of 28 CFR part 36). The Department of Transportation anticipates working with the Access Board and DOJ on further rulemaking to define requirements for passenger vessels. The Department thanks commenters who provided information on this subject, which we will be using in this effort, along with information generated by a consultant the Department is engaging to look into these matters.

The Department does want to make it clear its view that the ADA does cover passenger vessels, including ferries, excursion vessels, sightseeing vessels, floating restaurants, cruise ships, and others. Cruise ships are a particularly interesting example of vessels subject to ADA coverage.

Cruise ships are a unique mode of transportation. Cruise ships are self-contained floating communities. In addition to transporting passengers, cruise ships house, feed, and entertain passengers and thus take on aspects of public accommodations. Therefore cruise ships appear to be a hybrid of a transportation service and a public accommodation. As noted above, DOJ covers cruise ships as public accommodations under its title III rules.

In addition to being public accommodations, cruise ships clearly are within the scope of a "specified public transportation service." The ADA prohibits discrimination in the "full and equal enjoyment of specified public transportation services provided by a private entity that is primarily engaged in the business of transporting people and whose operations affect commerce (Section 304(a)). "Specified public transportation" is defined by Section 301(10) as "transportation by bus, rail, or any other conveyance (other than by aircraft) that provides the general public with general or special service (including charter service) on a regular and continuing basis."

Cruise ships easily meet the definition of "specified public transportation." Cruise ships are used almost exclusively for transporting passengers and no one doubts that their operations affect commerce. Cruise ships operate according to set schedules or for charter and their services are offered to the general public. Finally, despite some seasonal variations, their services are offered on a regular and continuing basis.

Virtually all cruise ships serving U.S. ports are foreign-flag vessels. International law clearly allows the U.S. to exercise jurisdiction over foreign-flag vessels while they are in U.S. ports, subject to treaty obligations. A state has complete sovereignty over its internal waters, including ports. Therefore, once a commercial ship voluntarily enters a port, it becomes subject to the jurisdiction of the coastal state. In addition, a State may condition the entry of a foreign ship into its internal waters or ports on compliance with its laws and regulations. The United States thus appears to have jurisdiction to apply ADA requirements to foreign-flag cruise ships that call in U.S. ports.

We would point out that, even though the United States has territorial jurisdiction over foreign-flag vessels in its ports, its ability to enforce its domestic laws may be limited by treaty. This poses a problem only where the terms of a statute are in conflict with the terms of a treaty. No determination has been made about whether the provisions of the ADA are in conflict with any treaty. Before promulgating any specific requirements affecting foreign-flag ships, the Department would see if any treaty provisions (e.g., provisions of the Convention on Safety of Life at Sea) would conflict with ADA requirements. The Department would structure any regulatory requirements to avoid such conflicts.

Subpart F—Paratransit as a Complement to Fixed Route Service

Section 37.121 Requirement for Comparable Paratransit Service

This section sets forth the basic requirement for comparable paratransit service, which applies to each public entity operating a fixed route system. The requirements for paratransit service are to be met by a system complying with §§ 37.123–37.133, which embody the eligibility requirements and service criteria for paratransit, though compliance with § 37.131 may be modified where an undue financial burden waiver is granted.

Though it is clear from the statute, a number of commenters wanted an explicit statement in the rule that the commuter bus and commuter rail systems are not required to provide complementary paratransit. The former is the case because Section 223(a) of the ADA specifically exempts commuter bus service from the paratransit requirement. The latter is true because commuter rail is excluded from the definition of "designated public transportation." Since, by definition, only entities providing designated public transportation can operate a "fixed route system," and the paratransit requirement applies only to entities operating fixed route systems, commuter rail systems are not subject to the paratransit requirements. Paragraph (c) restates that these types of systems do not have to provide paratransit.

A number of transit providers commented on the general concept of comparability used in the NPRM, which would require paratransit systems to meet a number of service criteria. The thrust of these comments was that it would be better to take a less specific approach to comparability. The rule, in this view, should state only a general concept of comparability and then permit local areas to design systems that would serve the needs of individuals with disabilities to the same degree that fixed route serves the need of the rest of the population. Another commenter's spin on this point was that the criteria should be only "minimum" criteria (i.e., guidelines or goals), with the local community, with consumer input, to determine what is comparable. Anything going beyond "minimum" criteria goes beyond the statute, in this commenter's view.

The latter comment misconstrues what a minimum criterion is. A "minimum" criterion is one which establishes a floor for service, below which one may not go. It is not a "minimal" criterion, which requires someone to do very little. DOJ makes the same point in the preambles to its ADA rules.

The view that there should be only a very general requirement for comparability, the content of which would be filled in at the local level, is inconsistent with the requirement for a set of minimum service criteria that would "determine the level of services" to be provided (section 223(c)(3) of the ADA). Moreover, it fails to take into account a long statutory and regulatory history of the concept of comparability, which leads directly to the service criteria approach of this rule. The ADA's joining of the concept of comparability with the need to establish specific service criteria builds on the approach taken by 16(d) of the Urban Mass Transportation Act of 1964, as amended (implemented by the Department's 1986 regulation on transportation services for individuals with disabilities, which established service criteria approaching a paratransit system that closely resembles that of the ADA NPRM). In enacting the ADA, Congress did nothing to suggest that the Department's approach should be changed. The language and purpose of the ADA are consistent with the Department's decision to retain service criteria.

A few commenters also asked that light and rapid rail operators be exempted from the paratransit requirement, since they typically served areas that bus systems also serve. The Department cannot adopt this comment. The ADA requires that all public entities operating fixed route systems—a category into which public rapid and light rail operators clearly fall—provide paratransit. Congress excepted commuter bus service, but no one else, from this requirement.

Section 37.123 ADA Paratransit Eligibility—Standards

Eligibility was one of the most commented-upon portions of the NPRM. One of the most frequent general comments was that the NPRM's conception of eligibility was too restrictive. To "strictly limit" ADA paratransit eligibility to the three proposed categories would create substantial hardship for many persons with disabilities, commenters said, and could deprive some persons who currently depend on paratransit of the opportunity to continue using the service (other commenters noted that some previously ineligible persons, such as those with cognitive disabilities, might become eligible, however).

The short answer to these comments is that the NPRM followed the statute almost to the letter in defining the eligibility categories. The longer answer has to do with the design and intent of the ADA. The ADA is a civil rights statute, not a transportation or social service program statute. The ADA clearly emphasizes nondiscriminatory access to fixed route service, with complementary paratransit acting as a "safety net" for people who cannot use the fixed route system. Under the ADA, complementary paratransit is not intended to be a comprehensive system of transportation for individuals with disabilities.

Another way of saying this is that the ADA does not attempt to meet all the transportation needs of individuals with disabilities. As one disability group representative suggested during the Advisory Committee meetings, the ADA is intended simply to provide to individuals with disabilities the same mass transportation service opportunities everyone else gets, whether they be good, bad, or mediocre.

It appears that many of the commenters who expressed concern about the perceived restrictiveness of the NPRM eligibility criteria did so in the belief that the rule should mandate a comprehensive transportation system for individuals with disabilities that would meet all or almost all their transportation needs. This desire for the best service possible is very understandable. While we do not share these commenters' view of the statute, we emphasize that the ADA and this rule set no ceilings on the service that local entities may provide. Local entities can provide paratransit service to anyone they wish. Such additional service, provided as a matter of local discretion, is very desirable. The rule points out, however, that since it is not mandated by the ADA, its costs cannot be regarded as financial burdens of ADA compliance that can be taken into account for undue financial burden waiver purposes.

It should be pointed out that a number of commenters, both disability groups and transit properties, supported the notion of strict adherence to the statutory eligibility criteria. Doing so was seen as a means of avoiding undue financial burdens and of avoiding an overload on the system that would make it harder for people who really needed the service to get it.

The NPRM specified that persons could be eligible on the basis of permanent or temporary disabilities. A few commenters objected to permitting eligibility based on a temporary disability. The Department believes that if someone meets one of the eligibility criteria, that person should be provided service, regardless of the duration of the disability involved. As noted in the next section of the rule, an entity may establish an expiration date for eligibility, which should prevent situations in which someone would remain eligible permanently based on a temporary disability.

Another concept that generated substantial comment was that of trip-by-trip determination for eligibility. Even those comments that objected to this provision recognized its conceptual validity. That is, all three statutory eligibility categories deal with functional inability to use fixed route transit arising from a combination of a disability and circumstances. Circumstances change (and, as commenters pointed out, the manifestations of disabilities can vary as well). Someone who can navigate the system to work may not be able to navigate the system to a different destination. Someone who can get to a bus stop in the summer may not be able to get there in the winter. Someone who can use accessible fixed route service can travel to some locations on the fixed route system but not others (i.e., those to which routes are not yet accessible). Consistent with this statutory scheme, it does not make sense to say that if the statute mandates that an individual be eligible in one set of circumstances, the individual must be regarded as eligible in all circumstances, even where, in fact, the individual can use fixed route service.

The thrust of the comments objecting to trip-by-trip eligibility was that it was too difficult to administer. It would complicate eligibility determinations and trip scheduling and create significant additional workload, commenters said. Some commenters, both disability groups and transit properties, said that the trip-by-trip approach was practicable, however. During the discussions of the Advisory Committee, some transit property representatives said that they were already doing or planning to do trip-by-trip eligibility, while others said it was not possible for them to operate in that way.

The Department is retaining this concept in the final rule. That is, if someone meets the eligibility criteria for some trips but not others, that person is ADA eligible only for the former. This does not mean that, in practice, a transit property which finds that administering a trip-by-trip eligibility system is too difficult must do so. The ADA requires paratransit to be provided to ADA eligible persons. As long as a transit provider ensures that paratransit is made available to all persons for all trips for which they meet eligibility criteria, the transit provider has complied with the rule. If the transit provider finds it administratively more practicable to provide any requested trip to an individual who is ADA paratransit eligible only for some of the trips requested, that is permitted under the rule. The only caveat is that the cost of trips not mandated by ADA requirements cannot be counted in the context of a request for an undue finanical burden waiver. (In applying for an undue financial burden waiver, an entity which did not actually operate a trip-by-trip eligibility system would count only the percentage of its overall costs equal to its percentage of ADA-mandated trips.)

The first eligibility category concerns individuals who cannot board, ride, or disembark from an accessible vehicle (e.g., people who, because of a visual or cognitive impairment, cannot "navigate the system"). This category was not the subject of much comment, except in relation to the issue of trip-by-trip determinations of eligibility, discussed above. In this context, some commenters with multiple sclerosis (MS) said that because of unpredictable day-to-day fluctuations in their condition, it would be almost impossible to apply trip-by-trip eligibility to them. This is a reasonable factor for transit providers to take into account as they plan their eligibility systems, but disability-specific eligibility provisions are not practicable in this regulation, in our view.

Some commenters questioned the eligibility of relatively mobile persons with visual impairments. The statute makes clear, however, that such persons

are eligible if they cannot "navigate the system."

The second eligibility category consists of people who can use an accessible vehicle but cannot use a route on the fixed route system for lack of accessible vehicles. There was relatively little comment on the basic requirement of this transitional eligibility category. There were a number of comments on one aspect of the proposed rule, however, which would make eligible for paratransit persons who could travel on an accessible vehicle but for a stop on which the bus lift cannot be deployed.

A number of transit properties objected to providing paratransit service on the basis of circumstances they viewed as being beyond their control (e.g., terrain features or architectural barriers). In many places, conditions at bus stops are under the jurisdiction of a state or local government, not the transit provider. Disability community commenters, on the other hand, said that if a stop were difficult to use by people with disabilities, the stop should be relocated. In no case, these commenters said, should the transit authority be permitted to declare stops off limits to wheelchair users, unless the lift would physically not deploy or would be damaged if it deployed.

The Department agrees that if a lift physically cannot be deployed at a stop, or would be damaged if it did, the transit authority should not have to deploy it. But it is not appropriate, in this event, to impose the resulting inconvenience on a passenger with a disability by denying that passenger the ability to get a particular destination. If the transit provider does not provide fixed route service to a passenger with a disability at a particular location at which service is provided to other persons, it does not provide accessible service there, triggering paratransit eligibility. Moving a stop to a location where the lift will work, as some commenters suggested, is one solution to this problem. The issue of refusing to deploy a lift where it can be deployed is a provision of service issue that is discussed under § 37.167. We would also point out that § 37.9 requires transit providers to cooperate with other public entities (who have responsibilities for bus stops under the DOJ Title II rule) with respect to bus stop accessibility.

The rule also provides that if someone with a common wheelchair cannot use a lift on an existing vehicle (i.e., because the lift does not meet Access Board standards), that individual would be eligible under this category. This is another form of "transitional" eligibility the occurrence of which should be reduced as new vehicles meeting Access Board standards come on line.

A few commenters suggested that rail systems not be subject to paratransit requirements, since they tend to have service areas that overlap bus service areas. Given the statutory requirement that complementary paratransit be provided for every fixed route system, we cannot adopt this comment. Comments did ask how eligibility requirements would apply to rail, however. The first and third standards quite clearly apply to rail the same as they do to bus, but the second standard is somewhat more difficult to apply in the rail context.

The statutory standard appears to be drafted with bus systems in mind, but its conceptual point applies to rail systems as well. This point is that if someone can ride on a route when it is accessible, but cannot now ride because the system is still inaccessible, the person is ADA paratransit eligible. With bus systems, residual inaccessibility has to do with there not yet being 100 percent accessible buses. On a rapid or light rail system, it has to do with there not yet being one accessible car per train or with key stations not yet being made accessible. The final rule uses these two factors to define rail system paratransit eligibility.

The third eligibility category, for people who have specific impairment-related conditions that prevent their getting to or from a stop—generated the most comment. The most thorough explanation of this concept comes from the House Public Works and Transportation Committee report (H. Rept. 101–485, Pt. 1, at 29–30):

> In general, the Committee does not intend that the concepts of boarding and disembarking include travel to or from a boarding or disembarking location. However, the Committee included a very narrow exception in recognition of specific impairment-related conditions which certain individuals with disabilities may have. Under the bill, paratransit services must be provided to any individual with a disability who has a specific impairment-related condition that prevents the individual from traveling to a boarding location or from a disembarking location on a fixed route system. A specific condition related to the impairment of the individual with a disability such as chronic fatigue, blindness, a lack of cognitive ability to remember and follow directions or a special sensitivity to temperature must be present. The Committee does not intend for the existence of architectural barriers to trigger eligibility for paratransit under this section if these barriers are not the responsibility of the fixed route operator to remove. In particular, no eligibility for paratransit exists due simply to a lack of curb cuts in the path of travel of an individual with a disability since, in the short term, such barriers can often be navigated around and, more importantly, pressure to eliminate these architectural barriers must be maintained on the state and local governmental entities responsible for eliminating them. In the same way, distance from a boarding or disembarking location alone does not trigger eligibility under this section. In both of these cases, a specific condition related to the impairment of the individual with a disability such as those cited previously must also be present to trigger paratransit eligibility. The committee is concerned that a broad interpretation of this exception will discourage the use of fixed route transit systems by individuals with disabilities.

Most comments on this subject said that the category was too restrictive, and that it failed to take into account the difficulty many individuals with disabilities have in getting to a bus stop. A blind person who cannot cross an eight-lane highway, or a wheelchair user who cannot go up a steep hill or push through heavy snow, may in fact be prevented from getting to a stop and using fixed route transit. The rule should recognize, these commenters said, that a combination of a disability and physical barriers, distance, terrain, etc. constitutes a valid basis for legibility.

The Department believes that it is reasonable to clarify in the rule that a combination of an impairment-related condition and environmental barriers may form a basis for eligibility. The existence of a barrier, standing alone, does not confer eligibility; only if the interaction of the barrier and the impairment-related condition prevents getting to the stop would there be eligibility. This position recognizes that environmental barriers "alone" do not confer eligibility. The Advisory Committee was in general agreement with this approach.

The final rule also calls attention to the statutory word "prevents." An impairment-related condition does not confer eligibility if it simply makes use of fixed route transit less comfortable, or more difficult, than use of fixed route transit for persons who do not have the condition. Members of the Advisory Committee recounted conversations with paratransit users who objected to going to the bus stop and waiting for the bus, rather than scheduling a paratransit van to come to their house. The rule provides that, unless the condition prevents the travel, the individual is not ADA paratransit eligible.

The ADA also requires one other person accompanying the eligible individual to be provided service, with other persons provided service on a space available basis. A few comments said that no more than one individual

should ever be provided service, since doing so would unduly complicate scheduling. Others said that more than one person should be guaranteed service in some situations (e.g., a parent who is a wheelchair user taking three children to the doctor). Other comments asked for clarification of the role of attendants. There were several suggestions that in order to be provided service, the other people should have the same origin and destination as the eligible individual.

Since the statute is clear about carrying one companion, with other space available, we do not have discretion to make either requested change on that point. With respect to attendants, we are persuaded by commenters' argument that a personal care attendant is (like a wheelchair) a necessary part of the eligible individual's mobility. Consequently, a personal care attendant (as distinct from a family member or friend who is along for the ride) is not counted against the one companion limit. To help providers administer this portion of the rule, the eligibility process provision (§ 37.125) allows them to require persons who will be traveling with personal care attendants to register that fact in advance.

We also agree with commenters who said the additional individuals should have the same origin and destination as the eligible individual, since the statute allows these otherwise ineligible persons to take the trip because they are "accompanying" the eligible individual. This means, in our view, that they are taking the same trip as the eligible individual.

Section 37.125 ADA Paratransit Eligibility—Process

It is common for commenters on proposed rules to complain that Federal agencies are imposing overly prescriptive requirements on them, and denying them appropriate local discretion (indeed, certain portions of this NPRM received responses of this kind). The most common comment on this section, however, was that the rule is not prescriptive enough. Commenters asked for exhaustive lists of impairment-related conditions, on an order of detail similar to the Access Board technical standards for vehicle accessibility. Standard Federal eligibility forms were requested, and some commenters favored a Federal (or at least centralized) eligibility certification process.

The Department understands the motivation behind these comments. Making case-by-case determinations of eligibility is a difficult business at best, fraught with tough judgment calls and conflicts between a genuine desire to provide service that people need, the need to provide service in accordance with the rules, and the need to stay within available resources. It would be very helpful to have that job made easier by standard procedures that everyone throughout the nation follows and standard eligibility templates into which all applicants could be fit, making difficult judgment decisions less necessary. We sympathize, but we are unable to provide the requested prescriptiveness.

This is not just a matter of generic regulatory policy. It is a fact that DOT is not as well situated as people in local areas to know what types of conditions, combined with what sorts of local circumstances, make a given person eligible for a certain set of trips. During the Advisory Committee meetings, we asked for recommendations from members—among them some of the most able transit providers and disability groups in the country—for what a set of Federal eligibility guidelines might look like, and we received only one. Various members mentioned functional tests they applied; we do not believe it would be that useful to endorse one of the many variations on such lists that people could devise.

Federally-designed templates, especially those that attempt to apply to the situations of thousands or millions of individual human beings, tend to fit poorly. A centralized process, even if the resources existed for it (they don't) would, in our view, be much less desirable than a process at the local level. Not only would it take longer to make decisions, but it would inevitably be less responsive to the details of local circumstances and individual needs. We would point out that the legislative history of the ADA contemplated that implementation of the paratransit requirement by fixed route operators would include a local certification process.

For these reasons, this section retains a requirement that each transit provider (or groups of providers in a region coordinating with one another) devise and operate a local eligibility process. For the reasons described in the discussion of § 37.121 this process must strictly limit ADA paratransit eligibility to the persons described in that section (this does not mean that paratransit service must be limited to such persons, however).

The NPRM proposed that information concerning this process be made available in accessible formats. There were few comments on this subject, none of which opposed the idea (though some asked for additional guidance), and we are retaining it.

The NPRM proposed a concept of "presumptive eligibility." The purpose of this provision is to protect applicants against lengthy delays in being approved for a paratransit service. The provision said that after a length of time had passed from the application, the applicant would be presumed eligible and provided service, until and unless a negative determination were made.

Most comments focused on the length of the period of time. Most said between two and four weeks was appropriate, with transit providers clustering around the latter and disability groups around the former. Others suggested immediate eligibility or a waiting period of up to six or eight weeks. Some comments suggested specifying that the period of time should not begin to run until a complete application had been received.

The Department believes that the suggestion that the time period should start to run when a complete application has been received is a good one, since it will not penalize transit providers for delays that are outside its control. With this addition, the Department believes that 21 days is a good length for the time period. This period will not drastically inconvenience applicants, but will allow a realistic time for transit agencies to do their work. The Department recognizes that legitimate workload and resource limitations may sometimes prevent decisions from being made in this timeframe, and adopts this provision in the belief that such delays should not unduly burden applicants who need service.

There were no objections to the proposal that eligibility determinations be in writing, and that provision is adopted. With respect to documentation of eligibility, some commenters asked for a requirement for an ID card, as such. There was disagreement among commenters whether DOT should prescribe a standard card or whether this should be left to local discretion. On the other hand, some comments said an ID card was unnecessary, given the presumptive eligibility requirement for visitors. Others opposed the idea on grounds of cost or administrative burden. There were a variety of ideas on what type of information the card should contain.

The Department believes that documentation of eligibility is a good idea, which will provide proof to both local and out-of-town provider personnel that the person is eligible. While we think it is unnecessary to prescribe a form, certain basic information should be on the form—

name of the eligible individual, name of the transit provider, the telephone number of the entity's paratransit coordinator, an expiration date, and any conditions or limitations on the eligibility. The documentation need not be a card, as such: it can be a letter or some other format. The Department does not believe such documentation will prove burdensome, since transit providers will have to provide most of this information in eligibility decision notices anyway.

A number of commenters favored recertification. Since circumstances change over time, it is useful for a transit provider to determine, at reasonable intervals, that an individual remains eligible, is still living and in the area etc. The final rule permits a recertification requirement.

The relatively few comments that addressed the administrative appeals process favored it, emphasizing the need for administrative due process. As adopted, this provision would include a filing deadline of 60 days, an opportunity to be heard in person, separation of functions (so that the appeal is not merely a reconsideration by the same person or office that made the original decision) and written notification. Appeals processes can become prolonged, just like initial decisions, so that beginning after 30 days from the completion of the appeal process, service would have to be provided to the individual until and unless a negative determination is rendered.

Comments asked under what circumstances it would be appropriate to deny eligibility or refuse service to individuals. Commenters suggested such circumstances as violent, illegal, or disruptive behavior, or a pattern of being a "no-show," as potential reasons for refusing service.

The ADA says people who meet its criteria must be treated as eligible. Therefore, it is only in very few and compelling situations that an entity is entitled to refuse service to an otherwise eligible person. The definition which the Department adopts would concern a passenger who engages in violent, seriously disruptive or illegal conduct. This issue is covered in the nondiscrimination section of the rule.

Sanctioning individuals who chronically fail to show up for scheduled rides, on the other hand, is not refusing to provide service on the basis of disability. An appropriate system of sanctions can help to deter or deal with individuals who misuse the system, absorbing capacity that could otherwise go to people who need rides and increasing costs.

For this reason, the final rule permits public entities to suspend the provision of paratransit service to otherwise ADA paratransit eligible individuals who engage in a pattern or practice of missing scheduled trips. A "pattern or practice" involves intentional, regular, or repeated actions, not isolated, accidental or singular events. "No-shows" attributable to causes beyond the individual's control—including problems with the delivery of the service (e.g., the van is an hour late and, before it arrives, the passenger has given up and called a taxi)—cannot form part of such a pattern or practice. Before imposing a sanction, the entity would have to provide basic administrative due process to the individual, and this section's adminstrative appeal mechanism would apply in cases decided against the individual.

Section 37.127 Complementary Paratransit Service for Visitors

Commenters had little quarrel with the idea that out-of-town visitors should be able to use paratransit in the area they are visiting, without going through a long eligibility process that would probably outlast their visit. But commenters had a number of questions and concerns about the operation of the process.

First, commenters wanted some definition of who a visitor is. Several suggested that a visitor should only be someone from outside not only the jurisdiction in which the individual resides, but also outside nearby jurisdictions which coordinate paratransit service with the "home" jurisdiction. The Department believes that this comment has merit, and we have included a provision to this effect.

Second, most commenters agreed that presenting an ADA eligibility documentation from one's "home" jurisdiction should be sufficient to gain eligibility away from home. A few commenters were concerned that such a procedure would lead to inequitable results if, for instance, someone from a city with loose eligibility criteria came into a city with a tighter program. The Department concedes this situation could exist, but believes that it is a problem that is not so serious as to justify eliminating the "full faith and credit" that one jurisdiction would extend to another's eligibility decisions for the short term.

Third, what if someone does not have ADA eligibility documentation? This could happen when, for example, a person travels from a small town which has no mass transit to a city that has complementary paratransit, or when someone who could use fixed route service at home is unable to navigate a fixed route system in a strange city. The NPRM proposed presumptive visitor eligibility as a solution to this problem. Most commenters agreed with this idea, but suggested that transit providers should be able to get certain minimum documentation from such a person. The Department agrees, and the final rule permits the provider to require presentation of proof of residence (to make sure the person was a visitor) and, when necessary, documentation of disability (e.g., in the case of a so-called "hidden disability"). The provider would accept the visitor's statement of inability to use the fixed route system.

Fourth, how long should visitor eligibility last? A number of commenters suggested that the rule should state an outside limit, after which someone would have to apply for regular, local eligibility. The Department also believes that this comment has merit. Since the period before service must be provided to a local applicant is 21 days, this seems to be a reasonable period of time. That is, a visitor who anticipated staying in town for longer than three weeks, or a part-year resident, could submit a completed application upon arrival, and receive service for 21 days, and then either have a decision from the local transit provider or a continuation of service until a decision was rendered.

Section 37.129 Types of Service

The NPRM preamble discussed some aspects of the kinds of transportation service that would be acceptable to provide as a part of complementary paratransit service. The premise of this discussion was that complementary paratransit service was demand responsive, providing origin to destination service.

Several comments asked for clarification on whether such service was meant to be door-to-door or curb-to-curb, and some of them recommended one or the other, or a combination of the two. The Department declines to characterize the service as either. The main point, we think, is that the service must go from the user's point of origin to his or her destination point. It is reasonable to think that service for some individuals or locations might be better if it is door-to-door, while curb-to-curb might be better in other circumstances. This is exactly the sort of detailed operational decision best left to the development of paratransit plans at the local level.

The NPRM asked whether on-call bus or paratransit feeder service would be acceptable in some circumstances. Comments were unanimous that on-call

bus service would be appropriate for persons in the second eligibility category. Feeder service was generally approved for the second and third eligibility categories, but with some reservations, mainly from disability groups which were concerned that a feeder system that would require more transfers than would be required for a similar trip on fixed route.

The Department agrees that on-call bus service and feeder service are appropriate in the eligibility categories mentioned. The second eligibility category consists of people who can use an accessible fixed route system, but currently do not have an accessible route to use to get to their destination. An on-call bus system can put an accessible bus on their route at the time they want to travel, meeting ADA requirements in their case. In some cases, a paratransit feeder to an accessible bus line would also work for people in this category.

The third category consists of people who can use a fixed route system but are unable, because of a specific impairment related condition, to get to or from a stop or station. Feeder paratransit to get them from home to a bus stop, or from a bus stop to a destination, meets ADA requirements for them. In order to make such a system operational, transfers between paratransit and fixed route vehicles would seem essential. Consequently, without eliminating this mode of providing service altogether, the Department could not prohibit transfers.

Section 37.131 Service Criteria for Complementary Paratransit Service Area

This criterion was the subject of more comments than any of the others. The NPRM has proposed the "crustacean" approach to service area, in which service would be provided to origins and destinations within corridors of a given width on either side of a fixed route. The Advisory Committee, in its January meeting, supported this concept on the basis that it reflected most closely the intent of the ADA that complementary paratransit be a "safety net" as comparable as possible to fixed route service.

A majority of comments on this concept favored the "circumferential" or "connect the dots" model of service area which was used in the Department's section 504 rule. This model was said to be easier to administer and to include more origins and destinations and hence serve the transportation needs of persons with disabilities more comprehensively. Of particular concern to some commenters was the possibility that some people who now get service would lose it. Commenters also expressed concern about isolated pockets left unserved. Some said that the rule should prohibit entities from reducing the size of their service area from what it was under the 1986 504 rule, or argued that "connect the dots" better implemented the ADA legislative history language that talked of paratransit service "throughout" the entity's service area.

Commenters who preferred the corrider-based model emphasized its congruence with the ADA's emphasis on fixed route service as the primary mode of transportation for everyone, with paratransit as a safety net for people who cannot use fixed route service. The paratransit service is not intended under the ADA, these commenters said, to provide service that is better or more comprehensive than that available on the fixed route system. Some of these commenters also said that, with minor modifications, the corrider-based would provide adequate service to the vast majority of origins and destinations accessible by mass transit. Both disability group and transit industry representatives to the Advisory Committee strongly favored retaining this model.

A related issue was the appropriate width of the corridors. The NPRM asked comments on a variety of alternatives. Most transit providers suggested a width on either side of a route of either ¼ (a distance often used for bus ridership planning purposes) or ½ mile. Disability groups tended to support wider corridors, of up to 1 or 1½ miles on either side of a route, with some suggestions that there should be wider corridors in suburban areas than in the urban core (since people are likely to travel farther to get to a route in less densely populated areas). Some commenters supported substantially broader service areas for rail systems, in the view that the "catchment areas" for rail stations and lines are much bigger than the areas from which bus riders are drawn to stops. One member of the Advisory Committee produced an interesting and much remarked upon map showing how a five mile corridor and ten mile radius around end stations would look for one major urban rail system.

The Department has decided to retain a modification of the corridor-based model, with a related but altered approach for the rail service area. We agree with the Advisory Committee that this approach better captures the intent of the ADA than the connect-the-dots-model, since it provides a closer analog to the actual area served by fixed route transit. We believe that, in many areas, this approach will be more efficient to administer, since it will not require long paratransit trips to areas well away from transit routes. Nor do we think that service throughout the service area necessarily implies a circumferential concept of service area. We meet this objective if we require service to origins and destinations throughout those areas which fixed route transit actually serves.

There may be some currently served origins and destinations that are not required to be served under this service area concept, just as there are some currently served individuals who the eligibility criteria of the ADA do not require to be served. We emphasize that the rule does not prohibit an entity from serving any origin or destination it chooses. The costs of serving origins or destinations that are not mandated in the rule do not count with respect to undue financial burden waiver requests, however.

With respect to corridor width, most members of the Advisory Committee favored ¾ of a mile on either side of a fixed route. This distance was thought to be reasonable because it was sufficiently wide to take into account the likelihood that fixed route service would draw passengers with disabilities from a relatively wide distance on either side of a fixed route, because corridors of this width would minimize unserved pockets, because it was not so wide as to vitiate the corridor concept, and because it represented a fair middle ground between commenters' suggestions. The Department believes that this distance has merit, and will adopt it.

The Department, in response to comments, has made two modifications to the corridor concept. First, if within the urban core area (i.e., the area in which the corridors merge together to make a nearly solid mass), there are pockets not within any corridor completely surrounded by corridors, the pockets will be served as well. (During the June Advisory Committee meetings, members often referred to the corridor model as the "handprint" approach). Second, outside the core area, the local entity, through the planning process, could increase corridor widths from ¾ mile to as much as 1½ miles, in order to serve additional origins and destinations in less densely populated areas.

The issue of how to define the service area for rail systems is one of the most difficult in the rulemaking. Among the factors we considered in deciding how to address this issue were the following:

• Rail systems draw riders from farther away from stations than bus lines draw riders from bus routes. Members of the Advisory Committee presented information that some rail systems, for their own planning purposes, define their service areas in terms of circles around stations (e.g., a three-mile radius around most stations and a five-mile radius around end stations, in one system).

• Information available to the Department suggests that the walking distance from which people go to a train station is not substantially greater than the walking distance from which they go to a bus line. Access to the station from further away is typically by other modes (e.g., bus, for people who do not drive their own cars to a park-and-ride), which involve a transfer to the rail line.

• While rail systems have fixed routes, people do not access them from a corridor in the same sense that they do a bus route. For example, if stations are four miles apart, and someone lives within sight of the tracks halfway between the stations, one cannot access the system without going two miles to a station.

• The most important use of paratransit for rail service is not so much getting to stations as it is providing trips along the rail corridor—especially longer trips—for which there are not good bus parallels.

On balance, we believe that the most reasonable approach to follow in defining the rail service area is to draw a circle around each rail station, with a radius of ¾ of a mile (at end or outlying stations, the local planning process could decide to expand the radius to up to 1½ miles, parallel to the bus corridor expansion described above). This appears to reflect more reasonably than a corridor-based approach the way people access and use rail systems. We judge the size of the circles to be a reasonable approximation of the distance from which people would go to a station without another transportation mode as an intermediary. The entity would provide service from any origin in any circle to any destination in any other circle.

We note that some commenters favored, rather than either the corridor or circumferential approach to service area, requiring service to all of a political jurisdiction (e.g., a county) in which the transit system operates. While such a definition makes sense for a comprehensive social service-oriented system intended to meet all needs of persons with disabilities, it goes well beyond comparability to the area actually served by fixed route transit. Other commenters preferred local option with respect to defining a service area. There is a statutory requirement for paratransit service in the service area of the fixed route system, and we believe that local option would not adequately ensure that service was provided as the statute intended.

The NPRM proposed that paratransit need not be provided outside the boundaries of the political jurisdiction in which the entity is authorized to operate, even if the corridor-based service area extended over the boundary. A substantial number of disability community commenters objected to this provision, saying that it would fragment service, require burdensome extra transfers or coordination, and not provide the service within the required service area.

Although we recognize that jurisdictional boundaries can create problems with the provision of service, we have retained this provision in the final rule. As commenters suggested, coordination, reciprocal agreements or memoranda of understanding should be able to solve a great many boundary overlap problems, and the rule require efforts of this kind. In other cases, however, entities may simply lack the legal authority to operate beyond the bounds of a particular jurisdiction, and this provision recognizes that fact.

Response Time

The NPRM proposed that an entity schedule paratransit so as to provide next-day service to users. The preamble asked about "real time scheduling" as well. A substantial majority of comments endorsed the proposal, believing that it was a realistic requirement that still provided reasonable convenient service to users. Some transit properties favored a 24-hour requirement, as opposed to next-day scheduling, and a number of commenters advocated real time scheduling, touting its faster response times and lower per-trip costs. Others were concerned that real time scheduling would increase demand substantially, raising costs and overloading capacity.

The Department is retaining the next-day scheduling provision, on the grounds stated by the commenters. It is a good balance of minimizing inconvenience to users and allowing providers sufficient time to schedule trips to maximize efficiency. The regulation explicitly allows real time scheduling to be used, though it is not mandated.

The NPRM said that reservation service must be made available during all business hours, and during times equivalent to normal business hours on days prior to a service day when the offices are not open. Many transit providers objected to this provision, saying that it would cause them to have to open their offices on weekends and increase administrative costs. It should be acceptable for people to call on Friday for Monday service, they thought. Some commenters also asked whether a reservation office had to be staffed at all such times or whether an answering machine or similar technology would do. Commenters also asked whether normal business hours meant hours when the transportation service was running, or administrative office hours. The relatively few disability group comments on this section supported the NPRM proposal.

With one clarification, the Department is retaining the NPRM provision. The clarification is to say that reservation service would be made available during the normal business hours of the provider's administrative offices. On days when those offices were not open, such as weekends and holidays, it would be acceptable to take reservations by answering machine or similar means. Consequently, the requirement to ensure next day scheduling for every service day—even a day following a weekend or holiday—should not be as onerous as some commenters believed. While some costs are involved (a scheduler would have to work, for example, on Sunday evening to schedule trips for Monday morning), this situation is more in keeping with the transportation system envisioned by the ADA than a system which included a major exception to the response time criterion. Under the ADA, response time is to be comparable to fixed route service to the extent practicable. We are confident that this provision is "practicable" for transit providers.

A few commenters mentioned that people should be able to make reservations a long time in advance, even if real time scheduling or next day scheduling were the practice. We agree, and the rule tells transit providers to allow reservations up to 14 days in advance of the individual's desired trip.

Some transit commenters asked for flexibility to establish pickup times in order to maximize efficiency. On the other hand, some disability community commenters asked for protection against what they regarded as the problem of transit authorities insisting on scheduling their travel at times very divergent from desired travel times. To address both sets of concerns, the Department is adding a provision to the rule that would allow transit authorities to negotiate pickup times with eligible

persons. However, the provider could not insist on pickup times (at either end of the trip) that varied by more than an hour from the user's desired travel time.

Fares

The NPRM proposed that fares could be double the base fixed route fare, taking into account both discounts and add-ons (e.g., transfer or premium charges). Few of the many commenters on this provision found much good to say about it, a number expressing confusion about its wording.

From the point of view of many transit providers, twice was not enough. Many of these commenters said that comparability, with respect to fares should be measured not in terms of the fares passengers paid, but on the percentage of revenues those fares represented of trip cost. Paratransit is a premium service with high per trip costs, a number of providers said, and should be priced accordingly. They also opposed taking discounts into account, saying that doing so would increase revenue pressures on them even more and would create a disincentive for using fixed route discounts beyond those situations mandated by law.

Disability community commenters, on the other hand, opposed allowing more than the fare charged on fixed route to be charged for paratransit. A double fare was not comparable, they asserted. These comments pointed out that many individuals with disabilities had limited incomes, and while doubling fares would not put a big dent in transit providers' deficits, it would take a big chunk out of the disposable incomes of many individuals with disabilities. Disability group comments were at best lukewarm on the inclusion of discounts.

At the Advisory Committee meetings, there was general agreement that it would be appropriate to drop consideration of discounts, and base the paratransit fare on the actual fare paid on a similar fixed route trip, including transfer and premium charges. There was not agreement on whether the fare could be double that amount. The Department agrees with the Advisory Committee on the calculation of the fare (i.e., that discounts should not be included) and will retain the provision permitting double that amount to be charged. We do so on the basis that this fare, while more than the fixed route fare, remains within bounds of comparability, and does have a reasonable relationship to the higher per-trip costs of demand-responsive service. A fare double that of a fixed route trip should not be prohibitively high. Given the differences between fixed route and paratransit service, including its per trip cost as well as its different service characteristics, we do not believe that the statute precludes a higher fare for paratransit. At the same time, we do not accept arguments that comparability should be viewed in terms of farebox recovery ratios. Under the statute, comparability is clearly viewed from the point of view of the consumer, not the provider.

Commenters also raised questions about the fares to be charged companions and attendants. A companion is someone who the ADA explicitly permits to ride with the eligible individual. If someone goes with a friend who has a disability on a fixed route bus, he pays the same fare as the friend. The same should hold true on paratransit. The rule will require the same fare to be charged for companions as for the eligible individual. With respect to personal care attendants (see discussion of § 37.123), the situation is different. A personal care attendant is someone with whom the eligible individual must travel, just as an individual with a mobility impairment must travel with a wheelchair. As an essential accommodation, the personal care attendant should travel without charge, and the rule so provides.

Commenters raised the issue of social service agency (or other organization) transportation. In response to a preamble question, a number of transit providers suggested that it was appropriate to permit higher fares in this situation. Trips guaranteed to an organization are a premium service, one commenter asserted, for which a higher charge is appropriate. Some commenters thought that this provision could help to deter "dumping" of social service transportation onto the public paratransit system, though nobody put the idea forward as a panacea for that problem. Several commenters cautioned that any such provision should have safeguards to ensure that the higher fares only applied to "agency trips," and not to individually paid for trips which an agency simply arranged for clients.

The Department is adopting these suggestions. Transit providers can negotiate a higher fare for "agency trips," which is appropriate since the ADA's requirement of comparable paratransit goes to individuals, not organizations. To the extent that it forestalls some "dumping," this approach is also desirable. At the same time, the provision applies only to agency trips, not to trips provided on behalf of and paid for by an individual client.

Restrictions and Priorities on Trip Purpose

The NPRM proposed to prohibit restrictions or priorities based on trip purpose. There were few comments. Those from disability groups favored the provision. There were two sources of objection to the proposal. The first was from a few medical transportation providers, who thought that priorities should be retained for kidney dialysis or other medical purposes. The second was from a few transit providers who were concerned that the provision would prohibit subscription service.

The concept of prohibiting restrictions and priorities based on trip purpose is basic to any system of comparable paratransit service. Nobody asks why someone is getting on a bus or rates the significance of their travel. If someone asks why a passenger is getting on a paratransit van, let alone decides for the passenger the relative importance of his or her trip in the larger scheme of things, we do not have a comparable situation. To the extent that such priorities are imposed (e.g., because of a provider decision that medical trips are more important than other types of trips), we have a social service model of transportation rather than the system of service comparable to fixed route transportation that the ADA envisions.

The issue of subscription service is discussed below in connection with § 37.133.

Hours and Days of Service

The NPRM proposed that paratransit service be available during the same hours and days as the fixed route service. Disability groups supported the provision as written, saying that it was necessary to ensure truly comparable service. A number of transit providers asked for more flexibility to devise service which efficiently served the most active periods of demand, but would not need to operate during periods of low demand (e.g., night-owl service). Several favored "averaging," in which entities would provide paratransit for a number of hours during the day equivalent to the number of hours, on average, that all routes ran. It would be more efficient to sacrifice night-owl paratransit and use the funds saved to provide more capacity in periods of higher demand, one commenter said.

If one can get from Point A to Point B at midnight on a fixed route bus, one should be able to travel between those same points at midnight on paratransit. If one cannot do so, it is hard to argue that the system is comparable. On this basis, the Department believes it is

necessary to retain the hours and days provision. Given the corridor-based approach to service area, it is likely that costs of late-night service should not be as great as some commenters believe. During low-demand hours, it is typical for there not to be service on many routes. These corridors drop off the service area during these times, and service to origins and destinations in them is not required. For this reason, "averaging," which might result in considerable savings in a circumferential service area, is less important in a corridor-based service area.

Capacity Constraints

The NPRM proposed prohibiting capacity constraints, including waiting lists, restrictions on the numbers of trips a person may take in a given period, or consistent trip denials or untimeliness. The relatively few disability community commenters speaking to this subject favored the requirement.

The majority of comments on the criterion were from transit industry parties, virtually all of whom opposed the idea. Some comments said that the provisions concerning consistent denials or untimeliness were too vague. Given fluctuations in demand, a system could not avoid some trip denials without having substantial excess capacity. Others said that it was unreasonable to expect any system to meet all demand, which would inevitably require the addition of more vehicles and keep costs spiraling upward. Several commenters pointed out that there are capacity constraints on fixed route systems (e.g., a full bus passes up people waiting at a stop), and capacity constraints were likewise reasonable for paratransit. A few commenters suggested a performance standard (e.g., meeting an average 98 percent of trip requests per day). Interestingly, few commenters spoke in favor of the two primary devices on which the proposal focused—trip number limits and waiting lists.

It is true, of course, that there are capacity constraints on fixed route transit. Certain potential routes are not served, runs are not made at certain times of day, and these limits restrict everyone's ability to travel on the fixed route system. Capacity constraints of this kind are already reflected in the requirements for paratransit, given the service area and hours and days criteria.

It is also true that packed buses pass by passengers waiting at stops and that full trains pull out of stations leaving passengers standing on the platform. In each of these cases, however (which are most likely to occur at peak travel periods when headways are shortest), all the passengers have to do is wait a little longer for the next bus or train to come. Certainly no system administrator tells such a passenger that he can forget about traveling that day because he has already ridden the bus 20 times that month or that he needs to work his way to the top of a waiting list before he can elbow his way onto a train. If the administrator of a paratransit system tells a similar story to a passenger, it is not a story about a comparable system.

Capacity constraint mechanisms of this kind are incompatible with a comparable paratransit system, and the rule will continue to prohibit them. We are also modifying the chronic trip denials and untimeliness provisions of the NPRM. These provisions were generally supported by disability community commenters, but were criticized by transit industry commenters as vague and difficult to enforce.

Anecdotal reports by disability group representatives, and surveys of some existing paratransit operations in several cities by the Department's Inspector General (IG), suggest that problems of this kind are a serious concern. In one city surveyed by the IG, for example, 26 percent of initial trips surveyed, and 32 percent of return trips, were one to five hours late. Nine percent of passengers had one-way trips that lasted between two and four hours, and involved up to 33 stops between origin and destination. Of a small sample of passengers interviewed by the IG in this city, more than half had quit using the system because of its unreliability.

In another system surveyed by the IG, the reservation phone lines opened at 5:45 a.m. Capacity was filled by 5:53, and no more reservations were accepted. In another city, the IG checked 658 reports by passengers of "no-show" vehicles, learning that erroneous reports about the scheduled pickups had been made by drivers in 26 percent of the cases.

The Department hopes that problems of this kind are not endemic to paratransit systems. But it is clear that patterns or practices of this kind have the effect of limiting the availability of paratransit service to eligible persons in a way not contemplated by the ADA. Consequently, the rule prohibits patterns or practices of this kind. As with the patterns or practices of individuals that adversely affect paratransit service delivery (see § 37.125), problems that are not within the control of the provider (e.g., late service because of an accident that ties up the highway) would not form the basis for a forbidden pattern or practice.

One issue that came up in the context of problems in service delivery was a suggestion by several disability community commenters that a paratransit provider should provide one or more free trips for missed trips, late arrivals, or trip durations that substantially exceeded fixed route travel time. This idea is attractive; it appears similar to a concept that has done good things for timely pizza delivery. Given the differences between pizza and paratransit, however, the practicability of the idea in this context is doubtful. There are, obviously, a number of reasons for service delivery problems that should not result in a financial penalty to the provider. The capacity constraints provision discussed above should, in our view, provide adequate redress for systemic problems in service delivery.

The discussion of the capacity constraints requirement, like the discussions of all the other service criteria, assumes a situation in which service is provided without creating an undue financial burden. In cases where an entity is granted an undue financial burden waiver, the rule provides that limiting the number of trips per person per time period is a primary method of reducing costs, while keeping other criteria constant to ensure continued service quality. This point was one made emphatically by disability group representatives on the Advisory Committee.

Given the phase-in period of up to five years permitted under this rule, the allowance of some negotiation of trip times, and the limitations on eligibility set forth in § 37.123, the Department anticipates that many providers will find pressures to impose capacity constraints reduced.

Additional Service

This section, like its counterpart in § 37.123, specifies that the service criteria do not limit the activities of paratransit providers. As the legislative history of the ADA notes, these requirements establish a "minimum level of paratransit service to be provided." (H. Rept. 1 101–485, Pt. 1, at 30). Providers can do more than this section requires. However, the cost of doing more than the ADA requires cannot be regarded as a financial burden of compliance. Therefore, the costs of additional service cannot be counted in connection with an undue financial burden waiver request.

Section 37.133 Subscription Service

A number of commenters on the capacity constraints and no restrictions and priorities on trip provisions of the rule asked about the role of subscription service. A number of these commenters asked for assurance that this service, which is useful for work trips and other repeated trips (e.g., to physical therapy sessions), would not be prohibited. Other commenters, though not opposed to subscription service, asked for assurance that it would not absorb all the capacity of a paratransit system, leaving little room for non-subscription trips. (Information available to the Department supports that this is a very real concern with some systems.)

We believe that, because it provides assurance of regular trips and saves the trouble of repeated calls for service for a work trip or other regular trips, subscription service can be a valuable component of a complementary paratransit system. Therefore, we agree with commenters who wish us to specify that such a system is permissible.

At the same time, we also agree that it would be inconsistent with the notion of a comparable paratransit system to let subscription service absorb the full capacity of the system, as it might at a given time of day (e.g., peak times for work trips). Consequently, the rule includes a maximum of 50 percent of system capacity that can be dedicated at any time of the day to subscription service. The one exception to this is if there is excess non-subscription capacity at a given time, so that system capacity goes begging. In that case, the subscription component of the service could be expanded.

Since subscription service is a limited subcomponent of all paratransit service, we believe it is reasonable to permit some limits on its use. For subscription service only, a provider could establish trip purpose restrictions (e.g., work trips only during morning and evening peak work trip periods) or waiting lists for participation.

Section 37.135 Submission of Paratransit Plan

The NPRM's § 37.113 contained certain provisions that are now new, separate sections. The description of these requirements as well as comments submitted on the proposal and the Department's response, are discussed below. (See §§ 37.135, 37.145, and 37.149.)

Section 37.113 of the NPRM proposed that each public entity providing fixed route service submit a plan by January 26, 1992, with annual submissions on each succeeding January 26th. The NPRM also proposed that section 18 recipients, small urbanized area recipients of section 9 funds administered by a state, and public entities who provide fixed route service that do not receive UMTA funds submit their plans to the appropriate state administering office.

The submission of plans by January 26, 1992, drew a few comments—all saying that this is an unrealistic date. One state department of transportation suggested that extensions be granted upon request, for cause. Unfortunately, the ADA contains a specific provision requiring that plans be submitted by January 26, 1992, and that plan implementation begin on that date also. While the Department does not believe it has flexibility in this area, there are new provisions regarding the submission of joint plans, as discussed below in § 37.141.

Sixteen commenters provided input on the proposal to have plans submitted and reviewed by states. All but a few were opposed to the idea. Most states that commented believe that the staffing and cost burden would be too great to bear. Disability groups recommended that the review remain with UMTA for consistency. One transit provider recommended that all plans go through the applicable funding agency for sign-off before being submitted to UMTA. One individual with a disability recommended that the states be allowed to act on behalf of UMTA, as in the section 18 program.

The Advisory Committee discussed the issue of plan submission to states, and their recommendation was to have all plans submitted to UMTA. The Department has revised this section somewhat in response to comments. First, in this section, we direct only two categories of entities to submit their plans to states. These are (1) UMTA recipients and (2) entities who are administered by the state on behalf of UMTA. We have eliminated the requirement that public entities not funded by UMTA submit their plans to the states.

As noted in § 37.145, we have retained the provision that certain UMTA grantees submit their plans to the states because UMTA would like the benefit of the states' expertise before final review. However, we have changed the states' role from that of a reviewer to that of a commenter, so that UMTA may receive the benefit of each state's knowledge of the grantee without unduly burdening it with actual review of the plan.

This section makes explicit a provision which was discussed in the preamble to the NPRM. The Department noted that some phase-in of implementation would probably be acceptable, but that phase-in would be determined based on individual circumstances. We asked if the final rule should be more specific. All commenters on this issue recommended that the Department be specific as to a phase-in period. Comments on how long a phase-in should be ranged from one year to ten years, with disability groups advocating a shorter period of time and transit providers advocating a longer period of time.

The final rule (§ 37.135(d)) specifies maximum 5-year time period for phase-in. This paragraph specifies that all entities must be in full compliance with all paratransit provisions by January 26, 1997, unless the entity has received a waiver from UMTA based on undue financial burden. While the rule assumes that most entities will take a year to fully implement these provisions, longer than a year requires the paratransit plans to contain milestones that are susceptible to objective verification. Not all plans will be approved if they have a five-year lead-in period. Consistent with the proposed rule, the Department intends to look at each plan individually, to determine what is required for implementation in each case.

Section 37.137 Paratransit Plan Development

The proposed rule contained three specific requirements during the development of the paratransit plan: first, that each entity ensure public participation in the development of the plan, which at a minimum would include a public hearing, the opportunity for public comment, and consultation with persons with disabilities. Second, this section would have required that each submitting entity survey existing services to determine what paratransit services are already being provided to ADA-paratransit eligible persons. Finally, the NPRM would have required that these requirements apply to each annual submission in addition to the initial submission.

Survey of Existing Services

Less than a dozen individuals and organizations submitted comments on this provision, with most focused on how the financial contributions of these providers should be counted and how to ensure that service included in the plan would be continued. Some private for profit providers thought they should be included in the survey and that they should be consulted in the preparation of the plan.

One state human services agency recommended that formal agreements between fixed route operators and outside operators be required to ensure that services are coordinated and equally available from area to area. The concern of this commenter is that an entity could include service provided by other unrelated agencies in its service plan, which could result in little service being provided to individuals not connected to client-specific agencies. One trade association stated that the rule should require that the plan document that the entity has not only identified the services, but has made every effort to make use of existing paratransit resources, including those of for-profit providers.

Section 223(c)(8) of the ADA specifically requires that each public entity submitting a paratransit plan survey existing services. While the ADA falls short of explicitly requiring coordination, clearly this is one of the goals. The purpose of the survey is to determine what is being provided already, so that a transit provider can accurately assess what additional service is needed to meet the service criteria for comparable paratransit service. In effect, the public entity will need to know specifically what services are being provided by whom if the entity is to count the transportation toward the overall need.

Since the public entity is required to provide paratransit to all ADA paratransit eligible individuals, there is some concern that currently provided service may be cut back or eliminated. It is possible that this may happen. The Department urges each entity required to submit a plan to work with current providers of transportation to determine not just what transportation services they provide, but to continue to provide it into the foreseeable future.

Public Participation Requirements

Over a dozen commenters made suggestions on the NPRM's public participation requirements. Those expressing concern about the adequacy of the proposed requirements stated that they were concerned about the quality of the consultation. One commenter suggested that the consultation begin early in the development of the plan and that the regulation should "require that each public entity form an ongoing citizens participation committee which would be formed in the early stages of paratransit plan development and would participate in all stages of plan development and review as well as plan implementation." This thought was echoed in the Advisory Committee in June.

Some commenters requested more specificity on the type and length of notice required. One transit provider suggested that for section 18 providers, the notice of intent to submit a plan should be adequate, with a hearing held only upon request. One disability group said that it would have a difficult time discerning who was the lead agency in the area, and that the lead agency should be designated and responsible for convening an advisory group. Finally, some commenters recommended that more elements of paratransit service (such as appeals from denial of service) be subject to a public hearing requirement.

The Department has made more explicit the public participation requirements in the final rule in three ways. First, it has added a new paragraph (§ 37.137(b)(1)), which requires that providers develop and carry out an outreach effort to locate and notify persons who may be eligible to use its paratransit service. Second, it requires that the entity use these public participation requirements when the entity is planning to phase in its paratransit service in more than one year or if it is going to request a waiver based on undue financial burden. Finally, the requirement that the public participation requirement be used for each annual submission has been extended to require that there be an ongoing process for the participation of persons with disabilities in the development of any programs as well as in periodic assessment of these services.

The Department believes that public participation is a key element in the effective implementation of the ADA. The ADA is an opportunity to develop programs that will ensure the integration of all persons into not just the transportation system of America, but all of the opportunities transportation makes possible. This opportunity is not without tremendous challenges to the transit providers. It is only through dialogue, over the long term, that usable, possible plans can be developed and implemented.

The public participation requirements do not mandate that service be provided to every person with disability. It does require that the entities providing paratransit service attempt to provide to the broadest range possible of persons with disabilities the opportunity to participate in what their future transportation options may look like.

Section 37.139 Plan Contents

The NPRM proposed eight substantive categories of information to be contained in the paratransit plan: information on current and changing fixed route service; inventory of existing paratransit service; discussion of the discrepancy between existing paratransit and what is required under this regulation; a discussion of the public participation requirements and how they have been met; the plan for paratransit service; efforts to coordinate with other transportation providers; a description of the process in place or to be used to register ADA paratransit eligible individuals; and a request for a waiver based on undue financial burden, if applicable.

Over fifty comments were received on this section, with two provisions drawing the most comment. First was the phase-in, and lack of specific dates for complete phase-in. Almost all commenters agreed that some phase-in would be necessary. While some felt that the timetable for phase-in was best left to the local decision making process and documented in the plan, most commenters recommended an implementation deadline. While three to five years were mentioned most often, the suggestions ranged from one to ten years. Some suggested different deadlines, depending on whether any paratransit service already existed. One commenter asked for a maintenance of effort provision for paratransit services existing as of July 26, 1990. Other commenters suggested that any reductions to existing services be phased in according to a timetable in the local plan.

The second major area of comment concerned the need for and difficulty of accurately estimating demand for paratransit service. Many operators commented on the difficulty in accurately predicting the demand for the newly mandated paratransit service, particularly in light of the prohibition on capacity constraints. One commenter noted that estimation of the ADA paratransit eligible population should be included in the plan so that reviewers could determine whether the proposed service would be in compliance.

Other comments included the perceived difficulty with identifying "unmet demand", with commenters indicating that this information was difficult and expensive to obtain. Other comments included a recommendation to reduce the six-year budget specified in the proposed rule to a five-year budget. The requirement to include a sign-off by the Metropolitan Planning Organization covered by the plan drew negative comment from a transit provider and a transit trade association. The transit provider suggested an exemption from MPO review if the

entity was a statewide organization or if the entity was not an UMTA recipient.

The final rule contains a reorganized and slightly expanded section on plan contents. This reflects commenters' requests to be more explicit, rather than less explicit.

This section, as well as § 37.135, provides for a maximum phase-in period of five years, with an assumed one-year phase-in for all paratransit programs. The required budget has been changed to five years as well. The Department has established a five-year phase-in in the belief that not all systems will require that long, but that some, particularly those who chose to comply with section 504 requirements with accessible fixed route service may indeed need five years.

We recognize the need to begin providing access to transportation immediately. We are confident that, through the public participation process, a realistic plan for full compliance with the ADA will develop. To help ensure this, the paratransit plan contents section now requires that any plan which projects full compliance after January 26, 1993 must include milestones which can be measured and which result in steady progress toward full compliance.

For example, it is possible that the first part of year one is used to ensure comprehensive registration of all eligible persons with disabilities, training of transit provider staffs, and the development and dissemination of information to users and potential users in accessible formats and some small increase in the current level of paratransit service being provided. It would not be possible to indicate in the plan that no activity was possible in the first year, but a plan could provide for proportionately more progress to be made in later years. Implementation must begin in January 1992.

Each plan, including its phase-in will be the subject of examination by UMTA. Not all providers will receive approval for a five-year phase-in. The plan must be careful, therefore, to explain what current services are, what the plans are, and include methods to discern the advance of progress toward compliance. These kinds of decisions are best made through the public participation process.

Several commenters indicate a real difficulty in estimating the demand for paratransit service. We are hopeful that the planning process will be enlightening. In an effort to assist in this area. UMTA is publishing a handbook for use by transit providers in developing their paratransit plans and service. This handbook should be available a couple of weeks after the final rule is published. (You may request it by calling the UMTA number in the **FOR FURTHER INFORMATION CONTACT** section of this preamble.) The ADA itself contained a figure of 43 million persons with disabilities, although it should be pointed out that many of these would not necessarily be eligible for ADA paratransit service. The Department's regulatory impact analysis, in discussing the probable costs involved in implementing this rule, estimates the likely percentage of population who would be eligible for paratransit as service between 1.4 and 1.9 percent. This figure can vary depending on the type and variety of services an entity has available or climate, or proximity to medical care and other services that a person with a disability may need. Clearly estimating demand is one of the most critical elements in the plan, since it will be used to make decisions about all the various service criteria. We are explicitly requiring that the plan include a demand estimate, using demand estimation methodology appropriate to the kind of system submitting the plan.

In response to comments, the Department has dropped the explicit requirement to identify unmet demand, although paragraph (b)(3) can be used to provide that information if it is available. Unmet demand becomes important in relation to service an entity provides on its fixed route. For example, if the entity could establish that its unmet demand on a fixed route system was three percent, then comparable paratransit service also could have an unmet demand of three percent, not zero.

Finally, § 37.139 contains a new paragraph (j), spelling out in more detail requirements related to the annual submission of plans (i.e., update). While the Department has no intention of requiring duplicative filings, and specifically states that only new information need be provided, the annual plan takes on new significance since the NPRM. Since there may be multi-year phase in, it is the annual plan that demonstrates the progress made to date, explains any delays, and projects the time for full compliance.

Section 37.141 Requirements if Joint Plan Is Submitted

This section is new, and revises the general provision in the proposed rule allowing joint plans to be submitted, so long as they were submitted on January 26, 1992. Commenters had asked for provisions to facilitate joint plans. Joint planning for coordinated paratransit service is consistent with the ADA (see, e.g., H.Rpt. 101–485, Pt. 1, at 30).

Section 37.141 lays out a staged submission plan for entities who are participating in a joint plan. Every effort must be made to develop and submit every element identified in § 37.139, by January 26, 1992, to the extent practicable. However, the section recognizes that there may be some cases in which bureaucratic red tape (the Federal government is familiar with this concept) delays the ability of willing parties to formally participate in plan finalization. When the final plan cannot be submitted by January 26, 1992, the final rule allows the entities participating in the joint plan to submit a final plan by July 26, 1992, if they do the following:

(1) Submit a general statement that they intend to file a joint coordinated plan;

(2) Submit a certification from each participating entity that they are committed to providing paratransit as a part of a coordinated plan;

(3) Submit a certification from each participating entity that it will maintain current levels of paratransit service until the joint plan begins;

(4) Provide as many elements of the plan as possible.

These provisions ensure that significant planning and plan implementation will begin by January 26, 1992, without precluding entities from cooperating because it was not possible to coordinate different public entities by January of 1992. The Department believes that this provision is consistent with the overall objective of the statute to provide transportation service to persons with disabilities in the most integrated setting possible. In no case will complete compliance for a coordinated plan be later than it would be for an individual plan—that is, all plans must provide for full compliance by January 26, 1997.

The final provision in the section notes that an entity may later join a coordinated plan, even if it has its separate plan on January 26, 1992. To do so, the entity must provide the assurances and certifications required of all of the other participating entities.

Section 37.143 Paratransit Plan Implementation

Proposed rule § 37.121 of the NPRM would have required each entity to begin implementation of its plan, pending any notice from UMTA. It also specified that an entity was to begin implementation of its plan, even if the plan includes a request for a waiver based on undue financial burden.

Many transit providers commented that it would be impossible to

implement paratransit plans without additional funding. Other commenters supported the requirement to begin implementation immediately. One commenter noted that if entities had begun implementing the plan after the proposed rule was published, as suggested by the Department in the NPRM, they would be well on their way to being able to implement the plan after January 26, 1992.

The final rule provision remains unchanged from the proposed rule. As noted in the proposed rule, the ADA is landmark civil rights legislation, and the responsibilities of public entities to provide transportation service to persons with disabilities extends beyond their responsibilities as UMTA grantees.

Section 37.145 State Comment on Paratransit Plans

The NPRM required each state to review each paratransit plan that was submitted to it, and to forward the plans to UMTA with a recommendation to approve or disapprove the plan. The states were to use the criteria UMTA will use in reviewing the paratransit plans submitted to it. Sixteen commenters provided input on this provision, and almost all were opposed. One trade association was in favor of the requirement, while almost every state that commented was opposed. Review of the plans by the states was viewed as a costly administrative task for which no funding was being provided. Some states were willing to undertake the task if funding were provided, although some did not want to review non-UMTA recipients under any circumstances. Disability groups commenting also were opposed, indicating that the time and priority needed to be placed on review of the plans could not be guaranteed at the state level, and that the responsibility should be centralized in UMTA.

The sentiments of the commenters were echoed in the June Advisory Committee meeting. The Department has revised the proposed provision in two ways in response to comments. As already discussed under § 37.135, the states will receive only UMTA recipient plans—from section 18 recipients that they administer and a small urbanized area recipients of section 9 funds administered by the state. Public entities who do not receive UMTA funds will submit plans directly to the applicable UMTA Regional Office (listed in appendix B to the rule).

Second, the Department has modified the role of the state. Each state will no longer be required to conduct a complete review of the plan and submit it with recommendations to UMTA. However, each state will be required to comment on the plans. This comment is very important for UMTA to receive, since these states administer these programs on behalf of UMTA. Each state's specific knowledge of the UMTA grantees it administers will provide helpful information to UMTA in making its decisions. Accordingly, the final rule provision requires that the state collect all of the plans required to be submitted to it, certify that it has received all of the plans required to be submitted to it, and comment on the plan, responding to five questions identified in the rule.

Section 37.147 Considerations During UMTA Review of Plans

The proposed provision spelled out three factors UMTA would consider in reviewing each plan, emphasizing the elements they thought most important. These include a complete submission, with all of the elements of the plan, that the plan complies with the substance of the ADA regulation, and that the entity complied with the public participation requirements in developing the plan.

Few comments were submitted on these elements, although some commenters asked for the Department to state a timeframe within which it will complete review of the paratransit plans. One disability group recommended that specific staff be dedicated to paratransit plan review, criticism and assistance to transit providers to conform their plans to ADA mandates.

The Department has made minor changes to this provision, by adding that UMTA also will look at comments submitted by the states and will look at efforts by the entity to coordinate with other entities in a plan submission. These elements are not the only items that will be reviewed by UMTA. Every portion of the plan will be reviewed and assessed for compliance with the regulation. This section merely highlights those provisions thought most important by the Department.

Section 37.149 Disapproved Plans

The proposed rule required an entity to resubmit its revised plan within 90 days of receipt of a letter of disapproval from UMTA. There were no comments on this provision.

The final rule adds an explicit reference to the requirement that the public participation requirements continue to apply to the amendment of a paratransit plan. This is the only change to the section.

Section 37.151 Waiver for Undue Financial Burden

Section 37.123(a) of the NPRM stated that a public entity required to provide comparable paratransit service under this regulation could apply for an undue financial burden waiver from providing that service, if the entity met one of three conditions set out in proposed § 37.125. Section 37.125 proposed options for a trigger mechanism, designed to prevent entities from requesting a waiver for undue financial burden, unless the entity had attained a specific measure of performance. All three performance triggers are described below.

Option I provided that an entity would meet all of the service criteria. If the entity could not do so without a significant adverse effect on its overall service, then it may apply for an undue financial burden waiver. This option would permit any entity that believed providing complementary paratransit meeting the criteria would have a significant adverse impact on its overall service to apply for a waiver.

Option II was based on a trips per capita concept: the entity would be eligible to request a waiver if the entity could not provide as many trips per registered ADA-paratransit eligible person as it does for its fixed route trips per capita, based on general population, without there being a significant adverse effect on overall service. In this second option, the entity first calculates trips per capita based on the population of the service area divided into the number of fixed route transit trips provided. Second, the entity provides this same number of paratransit trips to persons registered and meeting the eligibility requirements of the part, on a per capita basis.

For example, if the population of the service area is one million persons, and the fixed route service provides 50 million annual trips, then the system provides 50 trips per capita. In this example, the trigger for this entity requesting an undue financial burden waiver request would be the inability to provide 50 trips per ADA-eligible and registered capita without a significant adverse effect on its overall service. (See 56 FR 13873).

Option III was based on the entity exceeding the average cost of providing comparable paratransit, as determined by data provided by the Department breaking costs down by average city size. For example, in cities with populations between 500,000 and 1 million, the Department's estimate for the average annual cost to provide

paratransit service meeting the service criteria of the regulation at the time of the proposed rule was $5,782,000. If an entity in this city size category determined that its average annual cost for providing paratransit exceeding this amount, it would be eligible to apply for an undue financial burden waiver. As noted in the preamble, once more data was available from entities actually providing paratransit service, the model could be refined and actual average costs could change.

Over 100 comments were submitted on undue financial burden. Of those commenting on the triggers, commenters both liked and disliked all of the options, with Option I being the only option to receive more favorable than negative comments. There was not a pattern to the comments—each option was considered either objective or arbitrary by commenters and each option had supporters and detractors among both disability groups and transit providers.

There were thirteen commenters in favor of Option I and eleven opposed. Those commenters in favor felt that it was the most fair, flexible and reasonable option proposed. One commenter stated that Option I was preferable, since expenses for transportation vary widely throughout the country. Another commenter favored this option because it allows for input from the local community. One commenter stated that this option better followed Executive Order 12612 on Federalism, because each urban area has different resources and limitations. Criticism of this option focused on its perceived vagueness which could result in difficulty in administration and lack of consistency in application. One commenter cautioned against the premise of measuring undue financial burden by what is taken away from fixed route transit.

Nine commenters favored Option II and thirteen opposed it. The comments related to this option were more varied. The minority of commenters who favored this approach stated that it was clear and objective and utilized a definitive standard. Several who supported this option recommended that the final rule provide that "linked" passenger trips were the appropriate measure (a different meaning of the term that we use in the eligibility section). One commenter proposed that a cost cap be added to option two.

Opponents of Option II had a variety of reasons. The option was criticized for being too vague and having no relationship to cost. A few commenters stated that it encouraged discrimination by allowing a waiver application when a transit entity has more eligible or approved paratransit riders than expected. Several comments focused on the variables surrounding the statistics for per capita ridership for the general population and for persons eligible for ADA complementary paratransit service. One commenter stated that, depending on which variables were used, their costs for paratransit ranged from 7 percent to 100 percent of their fixed route budget. Another stated that, depending on which variables were used, its costs for paratransit ranged from $60 million per year to $500 million per year for the Option II (trips per capita) comparison, because the recent census did not include questions which could have provided this information. Another commenter stated that this option would be flawed if Section 15 data was used for comparison purposes, because previous record keeping was on the basis of 504, and transit systems have counted a larger universe than ADA paratransit eligible as eligible.

One commenter said that the comparison should be between the number of paratransit trips afforded to each person registered for paratransit and the number of trips taken on the regular transit system by average, typical riders of that system. A private transit provider stated that Option II assumed (incorrectly) proportionality. According to this commenter, research has shown that per capita paratransit ridership decreases with population, while per capita general transit ridership increases with population. Finally, one commenter stated that the frequency of travel on transit on a per capita basis would significantly understate demand. This was true, it was stated, because of the many modes of travel available to the traveler without disabilities in comparison to the lack of transit alternatives available to travelers with disabilities.

There were seven commenters in favor of Option III (city size) and twenty against. Commenters in favor noted that it was an objective criterion. The single largest criticism of Option III was that it was based on research from "fundamentally flawed" data which did not include data from most paratransit systems. Less specific criticisms stated that the estimates were arbitrary and unsupported. Others noted that the Department's preliminary estimates did not include estimates for cities under a population of 250,000; a few commenters included sample data for cities below the 250,000 population level, showing that costs for both fixed route and paratransit services varied widely, with specialized transit costs ranging from 3 percent to 15 percent of the totals. Based on this data, a commenter stated that average expenditure was not meaningful or relevant.

Other objections were based on the fact that UMTA formula funds are distributed to urbanized areas, not cities, and that the city size categories were overly broad. For instance, an area of 1.1 million population would have a threshold nearly twice as high as an area with a population of .9 million. Some commenters stated that the estimates for providing paratransit for their city size were greater than their annual Federal operating assistance. Two transit authorities requested that New York be removed from the over 1 million city size category, since it weighted the average disproportionately for the other cities. One commenter stated that in order to make Option III workable, a uniform manner of reporting costs and levels of service was needed. More general criticism of option three came from a state department of transportation, stating that population size is not always the issue for determining costs; in rural areas, geographic area and the entity's operation were important considerations. Another critic stated that Option three did not take into consideration unique factors for a particular area. One trade association recommended that Option III be revised to require an entity's cost to exceed the average cost of providing complementary paratransit by more than 10 percent of the average before a request for a waiver based on undue financial burden would be considered.

In addition to these options, the Department specifically requested comments on other possible measures of performance that could be used as a trigger mechanism for requesting an undue financial burden request. In response, one commenter suggested that a combination of the above options would be most suitable. Several commenters suggested a cost cap based on various percentages of an entity's operating budget including, in one case, three percent (a number with some historical resonance). One transit authority suggested a flexible numerical formula, such as that discussed in the legislative history, which takes into account local characteristics such as population, population density, level of paratransit service currently being provided, residential patterns, and the interim degree of accessibility for fixed route service.

Because of the diversity of comments received on this topic, we made the issue one of the focuses of the June Advisory Committee meeting. The

Advisory Committee used working groups for two days to focus on four principal areas of the rulemaking, including undue financial burden. (The other three groups discussed the technical standards for accessible vehicles and facilities, ADA paratransit eligibility criteria, and ADA paratransit service criteria.) The consensus of the working group on undue financial burden was to support Option II, the per capita model. The working group took examples of service currently being provided around the country and developed estimates of trips per capita to be provided to ADA paratransit registered persons, based on a national estimate of two percent of the population having a disability that would make them eligible for paratransit service.

Both representatives from disability groups and transit providers believed that this represented a fair measure of service (except for perhaps New York) that could be used to prevent entities who didn't need a waiver from applying for a waiver based on undue financial burden. The Department has considered all of the comments, and the recommendations from the Advisory Committee. For purposes of this final rule, the Department has decided to eliminate triggers from the provision for determining when an entity can request a waiver. The Department does not believe that a trigger is necessary, since it has adopted a five-year phase-in for paratransit service.

The intent of the triggers was to develop a measure of service that could be required to be demonstrated before an entity was eligible to request waiver relief. In the final rule, the information contained in the triggers will be elements of the undue financial burden waiver request. Since entities will be able to propose implementation over a five-year period, the Department believes that requests for undue financial burden waivers will be significantly reduced.

Each locality can develop a plan specifically geared to local circumstances. While not all jurisdictions will receive five years, each entity will be able to describe their unique circumstances.

Data from both Option I and Option II have been included as factors that the UMTA Administrator will consider when making his decision about whether to grant or deny a request for an undue financial burden waiver. The data available in Option III is information that will be used by the Department in assessing paratransit plans in general.

Returning to a discussion of the section at issue, § 37.151, the Department has revised this section to be consistent with the decision to eliminate the section on triggers. Thus, new § 37.151 lays out the circumstances in which an entity may request a waiver from paratransit service. Generally, the section allows an entity to request a waiver at any time it believes that it will not be able to meet a five-year phase-in or make measured progress toward its full compliance date specified in its original plan.

Section 37.153 UMTA Waiver Determination

In the proposed rule, this section laid out what would happen if the UMTA Administrator grants a waiver for undue financial burden. Specifically, the NPRM stated that the waiver would be for a specified period and that the entity would be required to do something to meet its responsibilities under the ADA. The Administrator would make a determination of what was appropriate on a case-by-case basis.

The Department received little comment on this provision, with one individual with disabilities stating that an entity should not receive a waiver for undue financial burden if only a minimum amount of paratransit service is being provided. Groups representing persons with disabilities were interested in the basic complementary paratransit service which must be provided by a public entity even though an undue financial burden waiver is granted. One individual felt that the waiver should not be granted to an entity meeting only minimum service criteria. A disability group felt that there were certain service characteristics which cannot be compromised even when a waiver is granted.

A transit operator contended that if minimum service is defined as "along key routes during core service hours," it will result in displacement of service to current passengers. It urged the Department to allow decisions as to minimum service level to remain with the local planning participation process. A member of the Advisory Committee recommended that the community be given real choices among service to be provided. One operator wanted to know if special provisions were being considered for small entities which operate less than five paratransit vehicles. A transit provider suggested that there should be a time limit for the validity of undue financial burden waivers (perhaps one to three years) and their circumstances should be reviewed frequently. This section already specifies that any waiver will be of a limited and specified duration. Since each waiver will be granted based on individual circumstances, the Department does not deem it appropriate to specify a generally applicable time period.

Some of these comments have been adopted in other sections of the regulations. For example, the Department requires entities to look at number of trips provided to each person on a monthly basis first, when determining where it would propose a lesser level of service. As discussed elsewhere in this preamble, the Department has strengthened, as a general matter, the public participation requirements involved in every aspect of the paratransit plan development, execution, and evaluation.

Concerning the comment that service along key routes would result in displacement of service to current passengers, we are not sure if the commenter understood the proposed rule as drafted. Requiring that an entity provide paratransit service at least during core hours along key routes is one option that the Administrator has available to him in making a decision about the service to be provided. This requirement stems from the statutory provision that the Administrator can require the entity to provide some minimum level of service, even if to do so would be an undue financial burden. Certainly part of a request for a waiver could be a locally endorsed alternative to this description of basic service. Accordingly, the only change in this section from the proposed rule (other than renumbering) is to include a specific provision that the Administrator can return the application for more information if necessary.

Section 37.155 Factors in Decision To Grant an Undue Financial Burden Waiver

The proposed rule listed nine factors the Administrator would consider in making his decision whether to grant an undue financial burden waiver request. These included effects on current fixed route service, reductions in other services, increases in fares, resources available to implement complementary paratransit over the period of the plan, current level of accessible service (fixed route and paratransit), cooperation among transit providers, evidence of increased efficiencies that have been or could be used, and any unique circumstances that may affect the entity's ability to provide paratransit service. The proposal also included an explicit statement that costs attributable to complementary paratransit were

limited to service provided to persons who are ADA paratransit eligible under this part.

Many commenters discussed these factors, with the most comments on attributable costs. Groups representing persons with disabilities believe that the UMTA Administrator should not consider costs attributable to the provision of non-ADA eligible transit. A state health and human services department commented that a cost element that should be considered is the cost to the community of not providing the proposed services, i.e., the cost of institutionalization and community support. Public transit providers believed that they should be able to count funds other than their own in meeting their financial obligation. One transit provider stated that the cost of transporting a companion should count toward the undue financial burden waiver. Other transit providers expressed concern that individuals who are not ADA-eligible will be denied their customary service because funds will necessarily go to the higher cost of paratransit service. Another cost related factor which received considerable comment was the issue of available resources. Several commenters pointed out that consideration of this factor penalized those transit providers which were successful in raising or identifying revenue sources for transit.

Several disability group commenters endorsed the NPRM's "efficiency" factor, noting that there is waste in large systems and management issues which must be examined. One transit agency questioned how UMTA could ensure that agencies were completely open with their cost records and cautioned that such a provision would require an on-going audit process beyond UMTA's resources. As an alternative, a self-certification, which would be subject to challenge and audit, was suggested.

Several commenters focused on the field of public participation. One disability group stated that the regulation should provide explicitly for public participation in the review of an entity's request for an undue financial burden waiver and the decision whether to grant a waiver. Another stated that the regulation should require that public comments and testimony on the waiver application become part of the record. Another disability group suggested that the regulation should require a transit authority to publish notices of its intent to seek an undue financial burden waiver and seek public comment. Conversely, a transit provider stated that it was not necessary to hold a public hearing before applying for an undue financial burden waiver. The proposal of fare increases as a factor in the consideration of undue financial burden waivers was endorsed by transit providers.

All of the factors that were proposed have been included in the final rule, since the Department continues to believe that they are adequate indicators in level of effort. In response to some of the comments, we have added additional factors that the Administrator will consider. First, as already mentioned, we have added as a factor the level of per capita service being provided, both for the population as a whole and what is being or anticipated to be provided to persons who are eligible and registered to receive ADA paratransit service. This statistic measures comparability to some extent, regardless of the specific service criteria, and should assist in a general assessment of level of effort.

The Department affirms that it is only the costs associated with providing paratransit service to ADA-paratransit eligible persons that can be counted in assessing whether or not there is an undue financial burden. Two cost factors have been added, however, which we believe enhance the Department's ability to assess real commitment to these paratransit provisions.

First, the Department will require a statistically valid methodology for estimating the number of trips provided by a paratransit system that are not mandated by the ADA. While the regulation calls for a trip-by-trip determination of eligibility, this provision recognizes that this is not possible for some systems, particularly some larger systems. Since only those trips provided to a person when he or she is ADA eligible may be counted in determining an undue financial burden, this provision is necessary.

Second, in determining costs to be counted toward providing paratransit service, paragraph (b)(3) allows an entity to include in its paratransit budget dollars to which it is legally entitled, but which, as a matter of state or local funding arrangements, are provided to another entity that is actually providing the paratransit service. The section is intended to cover those few jurisdictions that have what amounts to constructive receipt of funds, but when the funds do not flow through their treasury before being allocated to another entity providing paratransit service. This provision does not allow funds of a private non-profit or other organization which uses Department of Health and Human Services grant or private contributions to be counted toward the entity's financial commitment to paratransit.

An example of this is a state which has a statewide tax or levy which is set aside for transportation needs, with service provided at the local level. While each county or other taxing jurisdiction is allocated a certain percentage or amount set aside for this purpose, the actual recipient of the funds may not be the transit provider. Funds could flow directly to the county or other provider. Since the funds are intended for use in a specific area, and the transit provider is responsible for providing paratransit in the area, and it is only because of some administrative determination that the money is not being put in the entity's treasury, this money is considered part of the resources available to the public entity, and may be counted.

Subpart G—Provision of Service

Section 37.161 Maintenance of Accessible Features—General

Section 37.163 Keeping Vehicle Lifts in Operative Condition—Public Entities

The NPRM proposed requiring that accessibility features of vehicles and facilities be maintained in proper operating condition. With specific reference to lifts, the NPRM proposed that they be checked daily, before the vehicle went into service. If the lift didn't work, the vehicle would be put into the shop before going back into service. (This idea was proposed at the January meeting of the Advisory Committee, at which it enjoyed support both from disability group and transit industry representatives.) The NPRM proposed an exception for small operators from the requirement to keep a vehicle out of service pending lift repair, for up to five days, in a circumstance where keeping the vehicle out of service would reduce service to the public (e.g., there is no reserve vehicle).

All disability group commenters and some transit providers commenting on the issue favored the NPRM requirement of cycling the bus lift daily and taking the bus out of service if the lift did not work. This was said to be vital to ensuring that accessible service was a reality and not just an empty promise. Disability groups cited much unhappy experience with non-working lifts on a number of systems. Some transit providers said that cycling the lift weekly was enough. Others added that a vehicle should not be pulled out of service if good faith efforts are being made to fix the lift, obtain parts, etc., or

if the vehicles immediately ahead of and behind the vehicle with the broken lift had working lifts. A transit trade association said there should be only a general maintenance requirement, leaving specific requirements to operator discretion.

Most disability group commenters either opposed any exception to the requirement to take a vehicle out of service when the lift didn't work or said that such an exemption should be limited to very small operators. Transit industry commenters, in their written comments, did not discuss extending this option to larger operators.

This proposal was the subject of much discussion at the Advisory Committee meetings. Disability groups continued to press for adoption of the proposals. Some transit representatives said that they believed that daily (or, at any rate, frequent) cycling of lifts was a very good idea, that they did it themselves, but that they adamantly opposed having the rule tell them to do what they already did. Others suggested modifications to the daily cycling requirement. One large operator said that, given the size of its fleet, daily cycling would take an inordinate amount of staff time and therefore less frequent cycling should be permitted. Another operator, which has a policy of daily cycling, was forced by budget pressures to cut back to every-other-day cycling, and reported no ill effects in terms of the percentage of lifts which failed to operate.

With respect to the out-of-service requirement, an operator suggested that his transit authority's policy—to dispatch a special vehicle to pick up passengers stranded by a non-working lift—should be considered as an alternative. Another representative asked that methods of checking lifts other than cycling them, if available, be recognized for use.

Operators asked for extension of the proposed exemption to large operators, in situations where there was no reserve vehicle to put in the place of a vehicle with an inoperative lift, which would result in less than scheduled service on a route. Another suggestion was for a recordkeeping requirement concerning lift maintenance, though without any specific substantive standard for maintenance.

Disability group representatives continued to favor the NPRM requirement, in part on the ground that in the absence of daily cycling, the first person to learn of a broken lift might well be a stranded passenger. In addition, one disability group representative said, daily cycling of lifts will give provider personnel some useful daily experience in working with the mechanisms. An operator noted that, for a wheelchair user, not having a working lift was the equivalent, for other passengers, of having a bus door jammed shut.

In the final rule, the Department is splitting the discussion of maintenance into two sections. In § 37.161, the Department adapts language which appears in both the DOJ Title II and Title III rules concerning maintenance of accessible features. This language requires private and public entities to maintain accessibility features in operative condition, but does not prohibit "isolated or temporary" interruptions in service or access due to maintenance or repairs. Obviously, a rule cannot prevent a machine from breaking down occasionally.

To this DOJ formulation the Department is adding a paragraph which, in the NPRM, was in the facilities portion of the proposal. It requires the prompt repair of accessibility features. Comments on this paragraph from operators stressed that promptness may vary depending on a variety of factors, including budget, maintenance priorities, etc. This is surely true; the point of the rule is to ensure that repair of accessibility features is a priority. The rule does not state any particular deadline for fixing an inoperative accessibility feature, however. The second sentence of this paragraph provides that when an accessibility feature is out of order, the entity shall take reasonable steps to accommodate individuals with disabilities who would otherwise use the feature.

With respect to keeping vehicle lifts in operative condition, the Department has decided to apply the requirement only to public entities. Private entities are covered, with respect to lifts, by the general maintenance provision. Particularly for small private entities, it could be onerous to require more. Moreover, private entities often operate in a competitive environment. If one firm has a track record of good lift maintenance, and a competitor a poor record, business from customers with disabilities is likely to flow toward the former. Public transit providers, on the other hand, are usually in something approaching a monopoly situation. If the local transit authority's bus lifts frequently are out of order, a passenger does not usually have other public transit alternatives.

In response to the discussion of the Advisory Committee and other comments, the Department is modifying the NPRM proposal for daily cycling of lifts. Given that a variety of intervals for testing lifts may be successful in detecting breakdowns, the Department is requiring a system of regular and frequent checks of lifts, sufficient to determine that they are operative. A "check" may be a test of a lift by a means other than cycling the lift, if the operator has a workable alternative method. The Department regards such checks as essential, lest the first person to discover that a lift is inoperative be passenger stranded at the bus stop as a result of lift failure.

When a lift fails in operation, the transit authority needs to know the fact as soon as possible, so that it can plan corrective action and provide accommodations for inconvenienced users. The vehicle operator must report the failure by the most immediate means available.

When a lift is discovered to be inoperative, the vehicle must be put into the shop before the beginning of the vehicle's next service day and the lift must be repaired before the vehicle returns to service. This is consistent with the notion that a broken lift is like a door jammed shut; something that prevents access to the vehicles needs to be fixed before the vehicle is capable of serving the public.

There is an exception to this rule, however. In response to comments and Advisory Committee discussion, if there is no reserve vehicle (accessible or inaccessible) to replace the vehicle with the inoperative lift, such that taking that vehicle out of service will reduce service to the public, the entity may keep the vehicle with the inoperative lift in use for up to three days (larger operators) or five days (smaller operators). This is intended to give the operator time to obtain parts or make other preparations for fixing the lift for a short period of time, without reducing service. This short period of time should not put passengers in a worse position than in a situation where an inaccessible reserve fleet vehicle is used in place of a vehicle in the shop.

Finally, as a special case of the requirement of § 37.161(b) that entities provide accommodations when an accessibility feature is out of order, the rule requires that when a bus is operating on the street with a broken lift, and the headway to the next bus with a working lift exceeds 30 minutes, alternative transportation will be provided. This applies both in the situation where a lift breaks down in service and in the situation where a bus with an inoperative lift is operating during the three or five day exception discussed above. This provision responds to discussion in the Advisory Committee concerning provision of a special vehicle to accommodate

passengers inconvenience by problems with inoperative lifts.

Section 37.165 Lift and Securement Use

The use of securement, particularly with respect to three-wheeled scooters and other non-traditional wheelchairs is a long-running issue. Under the ADA, service that is accessible must be available to persons with mobility impairments no matter what kind of mobility aid they may use, including crutches, walkers, or three-wheeled mobility aids (see, e.g., S. Rept. 101–116 at 48).

The Department has taken a similar position under section 504 of the Rehabilitation Act. (See 51 FR 19024; May 23, 1986.) A March 1990 section 504 NPRM proposal included a requirement to provide service to all kinds of wheelchairs in common use, generating the highest volume of comments on any issue raised by that rulemaking. The comments to the March 1990 NPRM were discussed extensively in the preamble to the October 4, 1990, final rule. (See 55 FR 40767–40770.) It is not necessary to repeat that discussion here.

This issue was again the subject of many comments to the October rule. These comments tended to reiterate the points of view explained in comments to the March 1990 NPRM, and they did not present significant additional information. Disability community commenters almost unanimously opposed permitting transit providers any discretion to deny transportation to non-traditional mobility devices or to require transfers to a vehicle seat. They said that doing so would be discriminatory, since other passengers and objects they carried were not subject to similar requirements. They also pointed to the lack of actual accident data supporting claims that these devices pose a greater safety hazard than other devices.

A majority of transit providers continued to express concern about the safety and liability risks involved with carrying unsecured mobility devices, especially those, like the three-wheeled scooters, that are structurally weaker or less stable than others. A number of transit authorities, however, reported success with securing many non-traditional devices and said they had not encountered significant safety or liability problems.

Discussion of these issues continued at a session on the subject at the January 1991 Transportation Research Board meeting in Washington, DC, and at the January Advisory Committee meeting. Participants in these discussions were aware that the Access Board, in its transit vehicle guidelines, intended to establish dimensions and a weight-bearing capacity for lifts. These standards, most participants agreed, would address a portion of the problem, in that mobility devices that did not fit the Access Board standards would not be required to be transported. (These standards are the source of this rule's definition of a "common wheelchair.")

The NPRM proposed that, if a mobility device can fit onto a lift meeting Access Board standards, the entity must allow the device to ride on the vehicle. The transit provider would not deny service based on its view that the device could not satisfactorily be secured. Based on January discussions of the Advisory Committee, the Department proposed to permit transit providers to refuse to allow mobility devices to "park" in locations in a vehicle other than the designated securement locations. The transit authority was to have a device to confine the vehicle to the securement area, even if it could not be secured as provided in the Access Board guidelines.

In comments to the April 4 NPRM, disability community and transit industry commenters continued to disagree about securement issues, based on the same grounds as in prior rulemakings. There were fewer comments on the subject than in the past, and the tone of the comments was, on the whole, somewhat more moderate. As with past rulemakings, there was no factual information on actual experience concerning risks of carrying non-traditional mobility devices (one comment mentioned a 1979 accident with a three-wheel scooter that occurred off the bus that had led the provider to ban such devices).

At the June meeting of the Advisory Committee, there was comparatively little discussion of this issue. Clarification was requested on the relationship between the requirement to "confine" mobility devices and the requirement to carry such devices even if they could not, as such, be "secured."

The Department, consistent with the ADA's requirement for nondiscriminatory service and its legislative history, in view of the ATBCB's definition of a "common wheelchair," and given the continued absence of information in the record that would support a finding that carrying non-traditional wheelchairs would constitute a "direct threat" to the safety of others, is retaining the basic requirement proposed in the NPRM.

Under this requirement, any "common wheelchair" (i.e., one that will fit on a lift meeting Access Board guideline requirements) must be carried. The provider cannot deny service on the ground that the wheelchair is secured to the provider's satisfaction. The transit authority may require that the wheelchair park in one of the securement locations (generally, the Access Board guidelines require two such locations in a vehicle) and that the user permit the device to be secured using the vehicle's securement system. If the vehicle (e.g., a currently-existing bus) does not have a securement system meeting standards, the entity must still use a securement system it has to ensure as best it can, that the mobility device remains within the securement area.

Another issue that has been discussed in this series of rulemakings is transfers. Should the provider be able to require a passenger to transfer out of his own mobility device to a vehicle seat? The NPRM proposed that transfers could be required only on small vehicles, and then only under certain conditions. There were relatively few comments on this issue. A few disability community commenters and some transit providers were comfortable with the NPRM proposal. Other transit providers preferred to be able to mandate transfers whenever they thought it necessary, on the basis that it would enhance safety. Most disability community commenters preferred to prohibit mandatory transfers, on the basis that the chances of injury during transfer were significant, and that passengers were in the best position to balance the reasons for transferring or not transferring.

The Department is persuaded that it is best to leave the decision about whether to transfer with the passenger. It is appropriate for the provider to inform the passenger about what may be the risks of transferring or not transferring and to make a recommendation. But the transit authority is less likely than the passenger to know the particulars of the individual's disability and the effects of a transfer. The passenger, knowing this information and having been given the transit's authority's assessment, can make his or her own decision, which the transit provider must respect.

Another securement-related issue concerns operator assistance. Some individuals with disabilities cannot secure their own mobility devices using securement systems in some vehicles. In the NPRM, the Department proposed to require vehicle operators to assist passengers with securement, where necessary or requested by the passenger. We were aware that some transit agencies, for reasons such as concern over liability or provisions of labor-management agreements, have policies against vehicle operators leaving their seats to assist a passenger.

The NPRM provision proposed to override such policies.

Disability community comments all favored the NPRM requirement. Some transit authority commenters favored the provision (some with the stipulation that the driver not have to leave the bus), while others said the matter should be left to providers' discretion.

Particularly given requirements for the use of securement systems, and the varying abilities of passengers to use various securement systems without assistance, it is difficult to imagine how the requirements of the rule could be carried out if drivers remained in their seats and did not provide securement assistance, when needed. Likewise, with some lift systems (e.g., rear-door lifts), the driver must leave his or her seat to operate the lift. On vehicles that use ramps rather than lifts for access (particularly if the ramp has a relatively steep), the driver will probably have to leave the vehicle to assist a passenger using a manual wheelchair in getting up the ramp. In order to make the access promised by the ADA a reality, the Department must require assistance from vehicle operators, even if that means they they must leave their seats.

In the NPRM, the Department neglected to discuss the use of lifts by standees, an oversight that was brought to our attention by a substantial number of disability community commenters. Some comments from transit providers suggested there be limits on the use of lifts by standees (e.g., only where there are handrails, only in a wheelchair provided by the transit authority). Other transit provider comments opposed all standee lift use on safety grounds.

Consistent with requirements of the ADA discussed above, persons who use canes or walkers and other standees with disabilities who cannot readily climb steps into a vehicle must be permitted to use lifts. This is important, among other reasons, because based on the premise that standees can use lifts, the Access Board found it unnecessary to establish a standard for stair riser heights in vehicles that use lifts. Lifts meeting Access Board standards will have handrails. We have some doubts about the practicality of providers carrying wheelchairs on their vehicles to use for standees who are trying to access a vehicle via the lift.

Section 37.167 Other Service Requirements

This section, which applies both to public and private entities, contains a variety of service related requirements. The only one of them that was the subject of a significant amount of comment was the NPRM proposal to require announcing stops. A substantial number of transit industry commenters said that to announce all stops would be onerous for drivers (especially in urban areas where there was a stop every block) and suggested that stop announcements be made only at transfer points or major intersections. Others either favored the NPRM requirement or opposed any requirement in this area, saying it should be left to local discretion. Some operators of small vehicles said it should not be necessary for a driver to use a public address system to make announcements, since in a small vehicle the driver could be heard without amplification. Disability community commenters, especially those concerned with visual impairments, endorsed the NPRM proposal. At the Advisory Committee meetings, most members appeared to believe that announcements less frequent than every stop would be sufficient.

The Department will require announcements at major transfer points, other major intersections or destination points, and intervals along a route sufficient to permit persons with visual impairments to orient themselves to their location. In addition, as virtually all commenters agreed, the entity would announce stops on request. Where the driver's voice would carry the message without amplification on a small vehicle, that would be sufficient.

Most other provisions of this section were not controversial, though some of them (e.g., specific mention of permitting service animals on vehicles, prohibiting the entity from declaring a stop off-limits to lift use) were suggested by commenters rather than deriving from the NPRM itself.

One other concern that has come to the Department's attention is that transportation systems (particularly some rail systems) may make it difficult for persons with disabilities to board or disembark from vehicles by very rapidly closing doors on the vehicles before individuals with disabilities (who may move more slowly through crowds in the vehicle or platform than other persons) have a chance to get on or off the vehicle. This is a situation in which a facially neutral action (closing the doors in a given number of seconds) operates disproportionately to the disadvantage of individuals with disabilities. The final rule would require operators to take appropriate steps to give individuals with disabilities adequate time to board or disembark.

Section 37.169 Interim Requirements for Over-the-Road Bus Service Operated by Private Entities

Section 306(a)(2)(A) of the ADA requires the Department to issue interim regulations for over-the-road bus[es] (OTRB) service provided by private entities. These requirements cannot include mandates for wheelchair lifts or the purchase of boarding assistance devices. It should be noted that the Access Board transit vehicle guidelines include certain accessibility feature requirements (short of wheelchair lifts) for OTRBs. (See part 38, subpart G of this regulation.)

Because the statute postpones for several years final requirements concerning accessibility of OTRBs, pending the Department's consideration of a study to be done by the Office of Technology Assessment on issues related to OTRB accessibility, the Department believes that the key to "providing accessibility to such bus[es]" is ensuring that services provided by the private entities involved facilitate the use of the OTRBs by individuals as much as practicable. The requirements proposed in the NPRM went to such areas as avoiding arbitrary denials of service, provision of boarding assistance, stowage of mobility devices and other assistive devices, carriage of service animals, charges for required services, and advance notice.

Most commenters, from all interests represented, supported the idea that boarding assistance should be required. Disability groups said that the final rule should clarify that even if the passenger voluntarily travels with an attendant, boarding assistance remains the bus company's responsibility. On this point, one private bus company said that a passenger should provide an attendant to help with boarding, and that the driver should be allowed to decline to assist if he felt it would be unsafe to do so.

Most disability group commenters opposed the portion of the proposal that would allow refusals of service on the basis of safety, several suggesting that the DOJ "direct threat" language should be used if anything was necessary. A bus manufacturer asked for battery stowage information. Several disability group comments supported the wheelchair priority provision. Disability group comments opposed the advance notice provision, though some said such a provision might be permissible when boarding assistance was needed at an unstaffed stop. Some disability group comments proposed prohibitions on number limits or attendant

requirements. During a discussion of over-the-road bus issues at the Advisory Committee meetings, a representative of a bus association said that attendants are required in some instances, leading to renewed calls by disability group representatives for a provision prohibiting attendant requirements.

The Department is adopting the NPRM provision with a few modifications. The refusals of service provision based on safety considerations is being dropped, in the belief that the provision in the nondiscrimination section on violent or disruptive behavior will suffice for this purpose. The advance notice provision will be limited to situations in which boarding assistance is requested. We recognize that disability groups heartily dislike advance notice requirements, but when an accommodation is required, in a situation in which the entity is unlikely to be able to provide the accommodation without knowing about it in advance, such a requirement seems unavoidable. An advance notice requirement could apply only to boarding assistance situations, however. The reference to service animals is being dropped as duplicative, since the service animals provision of § 37.167 applies to OTRB service.

The boarding assistance provision is being retained, and a provision prohibiting attendant requirements was added to § 37.5. These provisions are consistent with the ADA, which does not call for attendant requirements (see, e.g., S. Rept. 101–116 at 74), and respond to comments on these subjects. Concern about passengers meeting their personal needs is not a sufficient reason for requiring an attendant. Passengers are the best judges of how to meet their own personal needs. Bus company personnel are not of course, required to perform personal care attendant-type services for passengers.

The final rule also retains the provision concerning baggage priority for mobility aids. The Department believes, given that for a wheelchair user, travel without the wheelchair is futile, it is more important that the wheelchair travel with its user than that luggage travel with other passengers.

Section 37.171 Equivalency Requirement for Demand Responsive Service Operated by Private Entities Not Primarily in the Business of Transporting People

There were no comments on this section, which is taken directly from the statute. It is closely related to the private entity requirements of §§ 37.101–37.105.

Section 37.173 Training

The proposed rule specified training to proficiency and required that service be provided competently and courteously. Almost 50 comments were received on the requirement, and virtually all commenters were supportive of the requirement to ensure training, with several noting that training is an essential provision in ensuring accessible transportation. There was little disagreement about the level of specificity of the provision, which the Department had requested comment on in its October 4, 1990, rule implementing the acquisition requirements of the ADA, as well as the April 4, 1991 NPRM. The preamble to the proposed rule raised for comment the rule's flexibility in allowing each transit provider to continue or improve its training program as needed, without specifying particular provisions. While there were not objections to the provision, nearly half of the comments included specific suggestions for essential elements of a training program. Examples of these comments include specific training in the proper handling of auxiliary aids, role playing by the employee to enhance understanding of the person with a disability being served by the transportation system, and training in the right of a person with disabilities to refuse priority seating if the person wished to do so. Both transit providers, individuals, and organizations representing disability groups recommended that employees be trained in sensitivity and disability awareness.

One-third of the commenters recommended that entities include persons with disabilities ether in the development of the training program or in the provision of training itself. The rationale of these comments is that persons with disabilities who use public transportation are in the best position to know the types of problems that exist and the best techniques and information for employees to have. One commenter suggested that persons with disabilities be provided mobility training to determine if use of a fixed route accessible system is feasible.

Other comments submitted by at least one commenter include the request that the training be subject to the public participation requirements of the rule, that there be the maximum level of local flexibility in developing the training program, that the Department be more prescriptive in the contents of the training provision, and that the training provision apply to the employer as well as the employee.

The training provision remains the same as it appeared in the proposed rule. The Department agrees with many of the comments submitted to it, and believes that the training provision, as drafted, will be an effective tool in ensuring adequate training. By retaining a general provision, we are allowing properties who already have good training programs to continue uninterrupted. Also, keeping it general allows each property to develop a new program or amend an existing program to be the best training program for the particular characteristics of the transit provider.

Good training, in both people skills and equipment skills, is essential to long-term satisfaction with transportation service. We believe that the strong public participation process mandated throughout this rule will aid local providers in developing the best plan to suit local needs.

49 CFR Part 38—Accessibility Standards for Transportation Vehicles

Part 38 contains accessibility standards for all types of transportation vehicles. The part is divided into vehicle types: Subpart B, Buses, Vans, and Systems; Subpart C, Rapid Rail Vehicles and Systems; Subpart D, Light Rail Vehicles and Systems; Subpart E, Commuter Rail Cars and Systems; Subpart F, Intercity Rail Cars and Systems; Subpart G, Over-the-Road Buses and Systems; and Subpart H, Other Vehicles and Systems.

Under the Americans With Disabilities Act, the Architectural and Transportation Barriers Compliance Board (Access Board) is charged with developing guidelines for defining accessible vehicles and facilities. Also under the ADA, the Department of Transportation must promulgate regulations that are consistent with the Access Board's standards.

Part 38 is the Department's promulgation of standards consistent with promulgation of the Access Board's vehicle guidelines. The only changes we have made to the guidelines are editorial in nature; for example, we have changed references to DOT regulations which must be cited differently to be consistent with **Federal Register** cross reference style. The comments submitted to the Access Board as well as comments submitted to DOT on these standards (which were forwarded to the Access Board) are summarized in the preamble to the Access Board's guidelines. What follows below is a brief discussion of the key accessible vehicle issues for transportation providers.

(1) Section 38.2 contains the concept of equivalent facilitation, authorized for the first time in the final rule. Equivalent facilitation is a concept drawn from the longstanding Uniform Federal Accessibility Standards for Facilities. The concept recognizes that there may be unique circumstances in which an entity may be able to meet the intent of the standard and the level of accessibility required by the standard without being able to meet the exact provision of the standard. Under the provisions of the proposed rule, this entity would be in violation of the standard and would have no redress.

With the concept of equivalent facilitation, an entity is permitted to request approval from the Department for an alternative method of compliance. The alternative must meet or exceed the level of accessibility specified by the standard. As discussed in the preamble discussion for part 37, § 37.7 contains the method for an entity to request approval from the Department. Paragraph (b) states that a determination will be made by the Administrator on a case-by-case basis and that the public participation requirements under the part apply to the application decision. The Department intends to seek the advice of the Access Board in making its determinations concerning equivalent facilitation.

(2) Section 38.4 contains a provision allowing for "dimensional tolerances". The concept of dimensional tolerances recognizes that materials may expand or contract due to changes in weather or as the result of aging of the material. Because of this, standards met during construction or manufacture may not continue to meet the standard over time. Variations of this kind, beyond the control of the entity and within the standard industry practice do not constitute a violation of the Part.

(3) Section 38.23 contains a general requirement for securement locations on buses and vans, and includes a change from the proposed rule. The NPRM required a minimum of one securement location for each vehicle. The final rule specifies a minimum of one location for vehicles under 22 feet in length, and a minimum of two for vehicles over 22 feet. There was broad support for the final rule provision, including from the American Public Transit Association.

(4) Section 38.23(b) contains the specifications for bus and van lifts. (As a practical matter, the lift specifications are the same for all vehicle types. The discussion in this paragraph applies equally to these other vehicles.) The standard calls for a lift dimension of 30 inches wide by 48 inches long, measured from two inches above the platform surface. The technical measurement specification of two inches above the platform surface is new in the final rule. This change acknowledges that the door structure of some buses would not permit the 30-inch platform unless the structure of the door frame was modified. By measuring the lift two inches above the platform surface, the standard allows a narrow platform at the bottom only, eliminating the need to redesign door frames but still allowing access of mobility aids.

(5) Section 38.23(c) contains provisions for the slope of a vehicle ramp. There is a new formula in the standards, in recognition of practical difficulties of making ramps workable in a vehicle setting. As explained by the Access Board in its preamble discussion of slopes:

> In view of the factors which could affect ramp slope, a formula has been included in the revised provision. In general, the least slope practicable must be obtained, and may not exceed 1:4 when deployed to ground. For purposes of determining the "normal" deployment condition, the provision assumes a 6-inch high curb. Further, a slope of 1:4 is permitted if the vertical floor height is 3 inches or less above a 6-inch curb. This would require a ramp approximately 1 foot long and would be short enough to be negotiable by many people. If the floor height does not exceed 6 inches, a slope of 1:6 would be permitted and a slope of 1:8 would be permitted if the floor height is 9 inches above the curb. A slope of 1:12 would be required for greater rises.

(6) Section 38.53 contains standards relating to the maximum horizontal and vertical distances allowed between rail cars and station platforms. The final standards amend the proposed standards, and reflect the different circumstances possible in providing accessible transportation in key and new stations over the next several years. First, the standard for new construction (new vehicles/new stations) remains as proposed at a 3 inch horizontal and ⅝ inch vertical gap. If for some reason a new rail system is not able to meet this standard, they may apply for application of the equivalent facilitation provision in § 38.2. Existing stations create a problem for this general standard, however. There is now a standard for new cars in existing stations of a 1½ inch vertical gap and a 3 inch horizontal gap. These same measurements are used as a standard for new vehicles in existing stations with curved platforms. Finally, for retrofitted vehicles (overhauled to meet the one car per train rule), they would need to have one door that meets a horizontal gap of 4 inches and a vertical tolerance of 2 inches.

Regulatory Analyses and Notices

Executive Order 12291 and Department of Transportation Regulatory Policies and Procedures

This is a major rule under Executive Order 12291, in that its expected annual costs exceed $100 million. It is also a significant rule under the Department of Transportation's Regulatory Policies and Procedures. The Department is preparing a Regulatory Impact Analysis which will be filed docket for the rulemaking. The analysis is undergoing final refinements at this time, and we expect it to be completed and placed in the docket in the near future. The rule has been reviewed by the Office of Management and Budget under Executive Order 12291.

As the analysis shows, the costs of implementing the requirements of this rule are expected to be high. These costs are driven by the statutory requirements of the ADA itself. These statutory requirements were enacted after lengthy negotiation and debate involving disability groups, the transit industry, the Administration and Congress. The Department has used its discretion under the ADA conservatively, to minimize the addition of costs to public and private entities beyond what the statute itself imposes.

Paperwork Reduction Act

This rule includes information collection requirements subject to the Paperwork Reduction Act. These include the requirements for submission of certifications concerning inaccessible used vehicles and the submission of plans for complementary paratransit and key station modifications. A request for Paperwork Reduction Act approval has been submitted to the Office of Management and Budget in conjunction with this rule. Information collection requirements are not effective until Paperwork Act clearance has been received.

Executive Order 12250

The portion of this rule amending 49 CFR part 27, the Department's section 504 rule, has been reviewed by the DOJ under Executive Order 12250. Rules implementing the ADA are not subject to DOJ review under this Executive Order. However, given the Department of Justice's deep involvement in implementing the ADA, the Department provided a copy of this to the DOJ for review in advance of its publication.

Regulatory Flexibility Act

Under the terms of the Regulatory Flexibility Act, this rule could have a

significant economic impact on a substantial number of small entities. The entities would be both small private and public entities that are subject to ADA accessible transportation requirements. The Regulatory Impact Analysis discusses impacts of the rule on small entities, serving the purpose of a Regulatory Flexibility Analysis. We would point out that these impacts are required by the ADA itself, and the statute gives the Department little discretion to contrive less burdensome requirements for small entities.

Executive Order 12612

This rule will have some Federalism impacts. A number of actions (e.g., providing complementary paratransit, buying all accessible buses) are mandatory for state and local agencies that, under previous regulations, were discretionary. Nevertheless, these requirements are statutory, and the Department does not have discretion to avoid imposing them. The Regulatory Impact Analysis for this rule discusses the impacts of these requirements on public entities, who are predominantly state and local government agencies. This discussion serves the purposes of a Federation Assessment for purposes of this rule.

The Department also points out that Subpart F of 49 CFR part 37 proposes to assign to state agencies a significant role in reviewing and commenting on paratransit plans for small transportation providers. This approach would allow states to continue in their traditional oversight role for these providers, avoiding unnecessary centralization of compliance planning and review at the Federal level, beyond what is required for compliance with the statute.

List of Subjects

49 CFR Part 27

Administrative practice and procedure, Airports, Civil rights, Handicapped, Individuals with disabilities, Highways and roads, Reporting and recordkeeping requirements, Transportation.

49 CFR Part 37

Buildings, Buses, Civil rights, Handicapped, Individuals with disabilities, Mass transportation, Railroads, Reporting and recordkeeping requirements, Transportation.

49 CFR Part 38

Buses, Civil rights, Handicapped, Individuals with disabilities, Mass transportation, Railroads, Transportation.

Issued this 22nd day of August, 1991, at Washington, DC.

Samuel K. Skinner,

Secretary of Transportation.

For the reasons set forth in the preamble, the Department takes the following actions:

PART 27—[AMENDED]

1. The authority citation for title 49, part 27 Code of Federal Regulations, is revised to read as follows:

Authority: Sec. 504 of the Rehabilitation Act of 1973, as amended (29 U.S.C. 794); secs. 16(a) and 16(d) of the Urban Mass Transportation Act of 1964, as amended (49 U.S.C. 16(a) and 16(d); sec. 165(b) of the Federal-aid Highway Act of 1973 (49 U.S.C. 142 nt.); the Americans with Disabilities Act of 1990 (42 U.S.C. 12101–12213; and 49 U.S.C. 322.

2. Section 27.19 of 49 CFR part 27 is amended by revising paragraph (a) to read as follows:

§ 27.19 Compliance with Americans with Disabilities Act requirements and UMTA policy.

(a) Recipients subject to this part (whether public or private entities as defined in 49 CFR part 37) shall comply with all applicable requirements of the Americans with Disabilities Act (ADA) of 1990 (42 U.S.C. 12101–12213) including the Department's ADA regulations (49 CFR parts 37 and 38), the regulations of the Department of Justice implementing Titles II and III of the ADA (28 CFR parts 35 and 36), and the regulations of the Equal Employment Opportunity Commission (EEOC) implementing title I of the ADA (29 CFR part 1630). Compliance with the EEOC title I regulations is required as a condition of compliance with section 504 for DOT recipients even for organizations which, because they have fewer than 25 or 15 employees, would not be subject to the EEOC regulation in its own right. Compliance with all these regulations is a condition of receiving Federal financial assistance from the Department of Transportation. Any recipient not in compliance with this requirement shall be subject to enforcement action under Subpart F of this part.

* * * * *

Subpart B [§§ 27.31–27.37] [Removed]

Subpart C [§§ 27.61–27.67] [Removed]

Subpart E [§§ 27.81–27.103] [Removed]

Appendix to Subpart E [Removed]

§ 27.73 [Removed]

Appendix A to Subpart D [Removed]

3. Subparts B (§§ 27.31–27.37), C (§§ 27.61–27.67), E (§§ 27.81–27.103) and the Appendix to subpart E of 49 CFR part 27 are removed, and § 27.73 and Appendix A to Subpart D thereof are removed.

Subpart F [§§ 27.121–27.129] [Redesignated as Subpart C]

Subpart D [§§ 27.71–27.75] [Redesignated as Subpart B]

4. Subpart F (§§ 27.121–27.129) thereof is redesignated as new subpart C and subpart D (§§ 27.71 and 27.75) is redesignated as new subpart B.

5. The text of § 27.3 thereof is designated as paragraph (a) and a new paragraph (b) is added to § 27.3, to read as follows:

§ 27.3 Applicability.

* * * * *

(b) Design, construction, or alteration of buildings or other fixed facilities by public entities subject to part 37 of this title shall be in conformance with Appendix A to part 37 of this title. All other entities subject to section 504 shall design, construct or alter a building, or other fixed facilities shall be in conformance with either Appendix A to part 37 of this title or the Uniform Federal Accessibility Standards, 41 CFR part 101–19 subpart 101–19.6, appendix A.

6. Wherever a reference occurs to § 27.67(d) in 49 CFR part 27, it is changed to § 27.3(b).

7. Removed from § 27.5 thereof are the definitions of "accessible," "closed station," "flag stop," "mass transportation," "mixed system," "open station," "passenger," and "urbanized area."

8. Section 27.67 is amended by removing paragraph (d), effective October 7, 1991.

9. Title 49, Code of Federal Regulations, part 37, is revised to read as follows:

PART 37—TRANSPORTATION SERVICES FOR INDIVIDUALS WITH DISABILITIES (ADA)

Subpart A—General

Sec.
37.1 Purpose.
37.3 Definitions.

Sec.
37.5 Nondiscrimination.
37.7 Standards for accessible vehicles.
37.9 Standards for accessible transportation facilities.
37.11 Administrative enforcement.
37.13 Effective date for certain vehicle lift specifications.
37.15–37.19 [Reserved]

Subpart B—Applicability

37.21 Applicability: General.
37.23 Service under contract.
37.25 University transportation systems.
37.27 Transportation for elementary and secondary education systems.
37.29 Private entities providing taxi service.
37.31 Vanpools.
37.33 Airport transportation systems.
37.35 Supplemental service for other transportation modes.
37.37 Other applications.
37.39 [Reserved]

Subpart C—Transportation Facilities

37.41 Construction of transportation facilities by public entities.
37.43 Alteration of transportation facilities by public entities.
37.45 Construction and alteration of transportation facilities by private entities.
37.47 Key stations in light and rapid rail systems.
37.49 Designation of responsible person(s) for intercity and commuter rail stations.
37.51 Key stations in commuter rail systems.
37.53 Exception for New York and Philadelphia.
37.55 Intercity rail station accessibility.
37.57 Required cooperation.
37.59 Differences in accessibility completion dates.
37.61 Public transportation programs and activities in existing facilities.
37.63–37.69 [Reserved]

Subpart D—Acquisition of Accessible Vehicles by Public Entities

37.71 Purchase or lease of new non-rail vehicles by public entities operating fixed route systems.
37.73 Purchase or lease of used non-rail vehicles by public entities operating fixed route systems.
37.75 Remanufacture of non-rail vehicles and purchase or lease of remanufactured non-rail vehicles by public entities operating fixed route systems.
37.77 Purchase or lease of new non-rail vehicles by public entities operating demand responsive systems for the general public.
37.79 Purchase or lease of new rail vehicles by public entities operating rapid or light rail systems.
37.81 Purchase or lease of used rail vehicles by public entities operating rapid or light rail systems.
37.83 Remanufacture of rail vehicles and purchase or lease of remanufactured rail vehicles by public entities operating rapid or light rail systems.
37.85 Purchase or lease of new intercity and commuter rail cars.
37.87 Purchase or lease of used intercity and commuter rail cars.
37.89 Remanufacture of intercity and commuter rail cars and purchase or lease of remanufactured intercity and commuter rail cars.
37.91 Wheelchair locations and food service on intercity rail trains.
37.93 One car per train rule.
37.95 Ferries and other passenger vessels operated by public entities. [Reserved]
37.97–37.99 [Reserved]

Subpart E—Acquisition of Accessible Vehicles by Private Entities

37.101 Purchase or lease of vehicles by private entities not primarily engaged in the business of transporting people.
37.103 Purchase or lease of new non-rail vehicles by private entities primarily engaged in the business of transporting people.
37.105 Equivalent service standard.
37.107 Acquisition of passenger rail cars by private entities primarily engaged in the business of transporting people.
37.109 Ferries and other passenger vessels operated by private entities. [Reserved]
37.111–37.119 [Reserved]

Subpart F—Paratransit as a Complement to Fixed Route Service

37.121 Requirement for comparable complementary paratransit service.
37.123 ADA paratransit eligibility: Standards.
37.125 ADA paratransit eligibility: Process.
37.127 Complementary paratransit service for visitors.
37.129 Types of service.
37.131 Service criteria for complementary paratransit.
37.133 Subscription service.
37.135 Submission of paratransit plan.
37.137 Paratransit plan development.
37.139 Plan contents.
37.141 Requirements for a joint paratransit plan.
37.143 Paratransit plan implementation.
37.145 State comment on plans.
37.147 Considerations during UMTA review.
37.149 Disapproved plans.
37.151 Waiver for undue financial burden.
37.153 UMTA waiver determination.
37.155 Factors in decision to grant an undue financial burden waiver.
37.157–37.159 [Reserved]

Subpart G—Provision of Service

37.161 Maintenance of accessible features: General.
37.163 Keeping vehicle lifts in operative condition—public entities.
37.165 Lift and securement use.
37.167 Other service requirements.
37.169 Interim requirements for over-the-road bus service operated by private entities.
37.171 Equivalency requirement for demand responsive service operated by private entities not primarily engaged in the business of transporting people.
37.173 Training requirements.

Appendix A to part 37—Standards for Accessible Transportation Facilities

Appendix B to part 37—UMTA Regional Offices

Appendix C to part 37—Certifications

Appendix D to part 37—Construction and Interpretations of Provisions of 49 CFR part 37

Authority: Americans with Disabilities Act of 1990 (42 U.S.C. 12101–12213); 49 U.S.C. 322.

Subpart A—General

§ 37.1 Purpose.

The purpose of this part is to implement the transportation and related provisions of titles II and III of the Americans with Disabilities Act of 1990.

§ 37.3 Definitions.

As used in this part:

Accessible means, with respect to vehicles and facilities, complying with the accessibility requirements of parts 37 and 38 of this title.

The Act or *ADA* means the Americans with Disabilities Act of 1990 (Pub. L. 101–336, 104 Stat. 327, 42 U.S.C. 12101–12213 and 47 U.S.C. 225 and 611), as it may be amended from time to time.

Administrator means Administrator of the Urban Mass Transportation Administration, or his or her designee.

Alteration means a change to an existing facility, including, but not limited to, remodeling, renovation, rehabilitation, reconstruction, historic restoration, changes or rearrangement in structural parts or elements, and changes or rearrangement in the plan configuration of walls and full-height partitions. Normal maintenance, reroofing, painting or wallpapering, asbestos removal, or changes to mechanical or electrical systems are not alterations unless they affect the usability of the building or facility.

Automated guideway transit system or *AGT* means a fixed-guideway transit system which operates with automated (driverless) individual vehicles or multi-car trains. Service may be on a fixed schedule or in response to a passenger-activated call button.

Auxiliary aids and services includes:

(1) Qualified interpreters, notetakers, transcription services, written materials, telephone headset amplifiers, assistive listening devices, assistive listening systems, telephones compatible with hearing aids, closed caption decoders, closed and open captioning, text telephones (also known as telephone devices for the deaf, or TDDs), videotext displays, or other effective methods of making aurally delivered materials

available to individuals with hearing impairments;

(2) Qualified readers, taped texts, audio recordings, Brailled materials, large print materials, or other effective methods of making visually delivered materials available to individuals with visual impairments;

(3) Acquisition or modification of equipment or devices; or

(4) Other similar services or actions.

Bus means any of several types of self-propelled vehicles, generally rubber-tired, intended for use on city streets, highways, and busways, including but not limited to minibuses, forty- and thirty-foot buses, articulated buses, double-deck buses, and electrically powered trolley buses, used by public entities to provide designated public transportation service and by private entities to provide transportation service including, but not limited to, specified public transportation services. Self-propelled, rubber-tired vehicles designed to look like antique or vintage trolleys are considered buses.

Commerce means travel, trade, transportation, or communication among the several states, between any foreign country or any territory or possession and any state, or between points in the same state but through another state or foreign country.

Commuter authority means any state, local, regional authority, corporation, or other entity established for purposes of providing commuter rail transportation (including, but not necessarily limited to, the New York Metropolitan Transportation Authority, the Connecticut Department of Transportation, the Maryland Department of Transportation, the Southeastern Pennsylvania Transportation Authority, the New Jersey Transit Corporation, the Massachusetts Bay Transportation Authority, the Port Authority Trans-Hudson Corporation, and any successor agencies) and any entity created by one or more such agencies for the purposes of operating, or contracting for the operation of, commuter rail transportation.

Commuter bus service means fixed route bus service, characterized by service predominantly in one direction during peak periods, limited stops, use of multi-ride tickets, and routes of extended length, usually between the central business district and outlying suburbs. Commuter bus service may also include other service, characterized by a limited route structure, limited stops, and a coordinated relationship to another mode of transportation.

Commuter rail car means a rail passenger car obtained by a commuter authority for use in commuter rail transportation.

Commuter rail transportation means short-haul rail passenger service operating in metropolitan and suburban areas, whether within or across the geographical boundaries of a state, usually characterized by reduced fare, multiple ride, and commutation tickets and by morning and evening peak period operations. This term does not include light or rapid rail transportation.

Demand responsive system means any system of transporting individuals, including the provision of designated public transportation service by public entities and the provision of transportation service by private entities, including but not limited to specified public transportation service, which is not a fixed route system.

Designated public transportation means transportation provided by a public entity (other than public school transportation) by bus, rail, or other conveyance (other than transportation by aircraft or intercity or commuter rail transportation) that provides the general public with general or special service, including charter service, on a regular and containing basis.

Disability means, with respect to an individual, a physical or mental impairment that substantially limits one or more of the major life activities of such individual; a record of such an impairment; or being regarded as having such an impairment.

(1) The phrase *physical or mental impairment* means—

(i) Any physiological disorder or condition, cosmetic disfigurement, or anatomical loss affecting one or more of the following body systems: neurological, musculoskeletal, special sense organs, respiratory including speech organs, cardiovascular, reproductive, digestive, genito-urinary, hemic and lymphatic, skin, and endocrine;

(ii) Any mental or psychological disorder, such as mental retardation, organic brain syndrome, emotional or mental illness, and specific learning disabilities;

(iii) The term *physical or mental impairment* includes, but is not limited to, such contagious or noncontagious diseases and conditions as orthopedic, visual, speech, and hearing impairments; cerebral palsy, epilepsy, muscular dystrophy, multiple sclerosis, cancer, heart disease, diabetes, mental retardation, emotional illness, specific learning disabilities, HIV disease, tuberculosis, drug addiction and alcoholism;

(iv) The phrase *physical or mental impairment* does not include homosexuality or bisexuality.

(2) The phrase *major life activities* means functions such as caring for one's self, performing manual tasks, walking, seeing, hearing, speaking, breathing, learning, and work.

(3) The phrase *has a record of such an impairment* means has a history of, or has been misclassified as having, a mental or physical impairment that substantially limits one or more major life activities.

(4) The phrase *is regarded as having such an impairment* means—

(i) Has a physical or mental impairment that does not substantially limit major life activities, but which is treated by a public or private entity as constituting such a limitation;

(ii) Has a physical or mental impairment that substantially limits a major life activity only as a result of the attitudes of others toward such an impairment; or

(iii) Has none of the impairments defined in paragraph (1) of this definition but is treated by a public or private entity as having such an impairment.

(5) The term *disability* does not include—

(i) Transvestism, transsexualism, pedophilia, exhibitionism, voyeurism, gender identity disorders not resulting from physical impairments, or other sexual behavior disorders;

(ii) Compulsive gambling, kleptomania, or pyromania;

(iii) Psychoactive substance abuse disorders resulting from the current illegal use of drugs.

Facility means all or any portion of buildings, structures, sites, complexes, equipment, roads, walks, passageways, parking lots, or other real or personal property, including the site where the building, property, structure, or equipment is located.

Fixed route system means a system of transporting individuals (other than by aircraft), including the provision of designated public transportation service by public entities and the provision of transportation service by private entities, including, but not limited to, specified public transportation service, on which a vehicle is operated along a prescribed route according to a fixed schedule.

High speed rail means a rail service having the characteristics of intercity rail service which operates primarily on a dedicated guideway or track not used, for the most part, by freight, including, but not limited to, trains on welded rail, magnetically levitated (maglev) vehicles

on a special guideway, or other advanced technology vehicles, designed to travel at speeds in excess of those possible on other types of railroads.

Individual with a disability means a person who has a disability, but does not include an individual who is currently engaging in the illegal use of drugs, when a public or private entity acts on the basis of such use.

Intercity rail passenger car means a rail car, intended for use by revenue passengers, obtained by the National Railroad Passenger Corporation (Amtrak) for use in intercity rail transportation.

Intercity rail transportation means transportation provided by Amtrak.

Light rail means a streetcar-type vehicle operated on city streets, semi-exclusive rights of way, or exclusive rights of way. Service may be provided by step-entry vehicles or by level boarding.

New vehicle means a vehicle which is offered for sale or lease after manufacture without any prior use.

Operates includes, with respect to a fixed route or demand responsive system, the provision of transportation service by a public or private entity itself or by a person under a contractual or other arrangement or relationship with the entity.

Over-the-road bus means a bus characterized by an elevated passenger deck located over a baggage compartment.

Paratransit means comparable transportation service required by the ADA for individuals with disabilities who are unable to use fixed route transportation systems.

Private entity means any entity other than a public entity.

Public entity means:

(1) Any state or local government;

(2) Any department, agency, special purpose district, or other instrumentality of one or more state or local governments; and

(3) The National Railroad Passenger Corporation (Amtrak) and any commuter authority.

Purchase or lease, with respect to vehicles, means the time at which an entity is legally obligated to obtain the vehicles, such as the time of contract execution.

Public school transportation means transportation by schoolbus vehicles of schoolchildren, personnel, and equipment to and from a public elementary or secondary school and school-related activities.

Rapid rail means a subway-type transit vehicle railway operated on exclusive private rights of way with high level platform stations. Rapid rail also may operate on elevated or at grade level track separated from other traffic.

Remanufactured vehicle means a vehicle which has been structurally restored and has had new or rebuilt major components installed to extend its service life.

Secretary means the Secretary of Transportation or his/her designee.

Section 504 means section 504 of the Rehabilitation Act of 1973 (Pub. L. 93-112, 87 Stat. 394, 29 U.S.C. 794), as amended.

Service animal means any guide dog, signal dog, or other animal individually trained to work or perform tasks for an individual with a disability, including, but not limited to, guiding individuals with impaired vision, alerting individuals with impaired hearing to intruders or sounds, providing minimal protection or rescue work, pulling a wheelchair, or fetching dropped items.

Solicitation means the closing date for the submission of bids or offers in a procurement.

Specified public transportation means transportation by bus, rail, or any other conveyance (other than aircraft) provided by a private entity to the general public, with general or special service (including charter service) on a regular and continuing basis.

Station means, with respect to intercity and commuter rail transportation, the portion of a property located appurtenant to a right of way on which intercity or commuter rail transportation is operated, where such portion is used by the general public and is related to the provision of such transportation, including passenger platforms, designated waiting areas, restrooms, and, where a public entity providing rail transportation owns the property, concession areas, to the extent that such public entity exercises control over the selection, design, construction, or alteration of the property, but this term does not include flag stops (i.e., stations which are not regularly scheduled stops but at which trains will stop to board or detrain passengers only on signal or advance notice).

Transit facility means, for purposes of determining the number of text telephones needed consistent with section 10.3.1(12) of appendix A to this part, a physical structure the primary function of which is to facilitate access to and from a transportation system which has scheduled stops at the structure. The term does not include an open structure or a physical structure the primary purpose of which is other than providing transportation services.

UMT Act means the Urban Mass Transportation Act of 1964, as amended (49 U.S.C. App. 1601 *et seq.*).

Used vehicle means a vehicle with prior use.

Vanpool means a voluntary commuter ridesharing arrangement, using vans with a seating capacity greater than 7 persons (including the driver) or buses, which provides transportation to a group of individuals traveling directly from their homes to their regular places of work within the same geographical area, and in which the commuter/driver does not receive compensation beyond reimbursement for his or her costs of providing the service.

Vehicle, as the term is applied to private entities, does not include a rail passenger car, railroad locomotive, railroad freight car, or railroad caboose, or other rail rolling stock described in section 242 of title III of the Act.

Wheelchair means a mobility aid belonging to any class of three or four-wheeled devices, usable indoors, designed for and used by individuals with mobility impairments, whether operated manually or powered. A "common wheelchair" is such a device which does not exceed 30 inches in width and 48 inches in length measured two inches above the ground, and does not weigh more than 600 pounds when occupied.

§ 37.5 Nondiscrimination.

(a) No entity shall discriminate against an individual with a disability in connection with the provision of transportation service.

(b) Notwithstanding the provision of any special transportation service to individuals with disabilities, an entity shall not, on the basis of disability, deny to any individual with a disability the opportunity to use the entity's transportation service for the general public, if the individual is capable of using that service.

(c) An entity shall not require an individual with a disability to use designated priority seats, if the individual does not choose to use these seats.

(d) An entity shall not impose special charges, not authorized by this part, on individuals with disabilities, including individuals who use wheelchairs, for providing services required by this part or otherwise necessary to accommodate them.

(e) An entity shall not require that an individual with disabilities be accompanied by an attendant.

(f) Private entities that are primarily engaged in the business of transporting people and whose operations affect commerce shall not discriminate against any individual on the basis of disability in the full and equal enjoyment of

specified transportation services. This obligation includes, with respect to the provision of transportation services, compliance with the requirements of the rules of the Department of Justice concerning eligibility criteria, making reasonable modifications, providing auxiliary aids and services, and removing barriers (28 CFR 36.301—36.306).

(g) An entity shall not refuse to serve an individual with a disability or require anything contrary to this part because its insurance company conditions coverage or rates on the absence of individuals with disabilities or requirements contrary to this part.

(h) It is not discrimination under this part for an entity to refuse to provide service to an individual with disabilities because that individual engages in violent, seriously disruptive, or illegal conduct. However, an entity shall not refuse to provide service to an individual with disabilities solely because the individual's disability results in appearance or involuntary behavior that may offend, annoy, or inconvenience employees of the entity or other persons.

§ 37.7 Standards for accessible vehicles.

(a) For purposes of this part, a vehicle shall be considered to be readily accessible to and usable by individuals with disabilities if it meets the requirements of this part and the standards set forth in part 38 of this title.

(b) For purposes of implementing the equivalent facilitation provision in § 38.2 of this title, a determination of compliance will be made by the Administrator or the Federal Railroad Administrator, as applicable, on a case-by-case basis. An entity wishing to employ equivalent facilitation in relation to a specification of part 38 of this title shall submit such a request to UMTA or FRA, as applicable, and include the following information:

(1) Entity name, address, contact person, and telephone;

(2) Specific provision of part 38 of this title with which the entity is unable to comply;

(3) Reasons for inability to comply;

(4) Alternative method of compliance, with demonstration of how the alternative meets or exceeds the level of accessibility or usability of the vehicle provided in part 38 of this title; and

(5) Public participation used in developing alternative method of compliance and input from that participation.

(c) Over-the-road buses acquired by public entities (or by a contractor to a public entity as provided in § 37.23 of this part) shall comply with § 38.23 and subpart G of part 38 of this title.

§ 37.9 Standards for accessible transportation facilities.

(a) For purposes of this part, a transportation facility shall be considered to be readily accessible to and usable by individuals with disabilities if it meets the requirements of this part and the standards set forth in appendix A to this part.

(b) Facility alterations begun before January 26, 1992, in a good faith effort to make a facility accessible to individuals with disabilities may be used to meet the key station requirements set forth in §§ 37.47 and 37.51 of this part, even if these alterations are not consistent with the standards set forth in appendix A to this part, if the modifications complied with the Uniform Federal Accessibility Standard (UFAS) (41 CFR part 101–19, subpart 101–19.6) or ANSI A117.1(1980) (American National Standards Specification for Making Buildings and Facilities Accessible to and Usable by, the Physically Handicapped). This paragraph applies only to alterations of individual elements and spaces and only to the extent that provisions covering those elements or spaces are contained in UFAS or ANSI A117.1, as applicable.

(c) Public entities shall ensure the construction of new bus stop pads are in compliance with section 10.2.1.(1) of appendix A to this part, to the extent construction specifications are within their control.

(d) For purposes of implementing the equivalent facilitation provision in section 2.2 of appendix A to this part, a determination of compliance will be made by the Administrator or the Federal Railroad Administrator, as applicable, on a case-by-case basis. An entity wishing to employ equivalent facilitation in relation to a specification of appendix A to this part shall submit such a request to UMTA or FRA, as applicable, and include the following information:

(1) Entity name, address, contact person and telephone;

(2) Specific provision of appendix A with which the entity is unable to comply;

(3) Reasons for inability to comply;

(4) Alternative method of compliance, with demonstration of how the alternative meets or exceeds the level of accessibility or usability of the facility provided in appendix A; and

(5) Public participation used in developing alternative method of compliance and input from that participation.

§ 37.11 Administrative enforcement.

(a) Recipients of Federal financial assistance from the Department of Transportation are subject to administrative enforcement of the requirements of this part under the provisions of 49 CFR part 27, subpart F.

(b) Public entities, whether or not they receive Federal financial assistance, also are subject to enforcement action as provided by the Department of Justice.

(c) Private entities, whether or not they receive Federal financial assistance, are also subject to enforcement action as provided in the regulations of the Department of Justice implementing title III of the ADA (28 CFR part 36).

§ 37.13 Effective date for certain vehicle lift specifications.

The vehicle lift specifications identified in §§ 38.23(b)(6), 38.83(b)(6), 38.95(b)(6), and 38.125(b) of this title apply to solicitations for vehicles under this part after January 25, 1992.

§§ 37.15–37.19 [Reserved]

Subpart B—Applicability

§ 37.21 Applicability: General.

(a) This part applies to the following entities, whether or not they receive Federal financial assistance from the Department of Transportation:

(1) Any public entity that provides designated public transportation or intercity or commuter rail transportation;

(2) Any private entity that provides specified public transportation; and

(3) Any private entity that is not primarily engaged in the business of transporting people but operates a demand responsive or fixed route system.

(b) For entities receiving Federal financial assistance from the Department of Transportation, compliance with applicable requirements of this part is a condition of compliance with section 504 of the Rehabilitation Act of 1973 and of receiving financial assistance.

(c) Entities to which this part applies also may be subject to ADA regulations of the Department of Justice (28 CFR parts 35 or 36, as applicable). The provisions of this part shall be interpreted in a manner that will make them consistent with applicable Department of Justice regulations. In any case of apparent inconsistency, the provisions of this part shall prevail.

§ 37.23 Service under contract.

(a) When a public entity enters into a contractual or other arrangement or relationship with a private entity to operate fixed route or demand responsive service, the public entity shall ensure that the private entity meets the requirements of this part that would apply to the public entity if the public entity itself provided the service.

(b) A private entity which purchases or leases new, used, or remanufactured vehicles, or remanufactures vehicles, for use, or in contemplation of use, in fixed route or demand responsive service under contract or other arrangement or relationship with a public entity, shall acquire accessible vehicles in all situations in which the public entity itself would be required to do so by this part.

(c) A public entity which enters into a contractual or other arrangement or relationship with a private entity to provide fixed route service shall ensure that the percentage of accessible vehicles operated by the public entity in its overall fixed route or demand responsive fleet is not diminished as a result.

(d) A private entity that provides fixed route or demand responsive transportation service under contract or other arrangement with another private entity shall be governed, for purposes of the transportation service involved, by the provisions of this part applicable to the other entity.

§ 37.25 University transportation systems.

(a) Transportation services operated by private institutions of higher education are subject to the provisions of this part governing private entities not primarily engaged in the business of transporting people.

(b) Transportation systems operated by public institutions of higher education are subject to the provisions of this part governing public entities. If a public institution of higher education operates a fixed route system, the requirements of this part governing commuter bus service apply to that system.

§ 37.27 Transportation for elementary and secondary education systems.

(a) The requirements of this part do not apply to public school transportation.

(b) The requirements of this part do not apply to the transportation of school children to and from a private elementary or secondary school, and its school-related activities, if the school is a recipient of Federal financial assistance, subject to the provisions of section 504 of the Rehabilitation Act of 1973, and is providing transportation service to students with disabilities equivalent to that provided to students without disabilities. The test of equivalence is the same as that provided in § 37.105. If the school does not meet the criteria of this paragraph for exemption from the requirements of this part, it is subject to the requirements of this part for private entities not primarily engaged in transporting people.

§ 37.29 Private entities providing taxi service.

(a) Providers of taxi service are subject to the requirements of this part for private entities primarily engaged in the business of transporting people which provide demand responsive service.

(b) Providers of taxi service are not required to purchase or lease accessible automobiles. When a provider of taxi service purchases or leases a vehicle other than an automobile, the vehicle is required to be accessible unless the provider demonstrates equivalency as provided in § 37.105 of this part. A provider of taxi service is not required to purchase vehicles other than automobiles in order to have a number of accessible vehicles in its fleet.

(c) Private entities providing taxi service shall not discriminate against individuals with disabilities by actions including, but not limited to, refusing to provide service to individuals with disabilities who can use taxi vehicles, refusing to assist with the stowing of mobility devices, and charging higher fares or fees for carrying individuals with disabilities and their equipment than are charged to other persons.

§ 37.31 Vanpools.

Vanpool systems which are operated by public entities, or in which public entities own or purchase or lease the vehicles, are subject to the requirements of this part for demand responsive service for the general public operated by public entities. A vanpool system in this category is deemed to be providing equivalent service to individuals with disabilities if a vehicle that an individual with disabilities can use is made available to and used by a vanpool in which such an individual chooses to participate.

§ 37.33 Airport transportation systems.

(a) Transportation systems operated by public airport operators, which provide designated public transportation and connect parking lots and terminals or provide transportation among terminals, are subject to the requirements of this part for fixed route or demand responsive systems, as applicable, operated by public entities. Public airports which operate fixed route transportation systems are subject to the requirements of this part for commuter bus service operated by public entities. The provision by an airport of additional accommodations (e.g., parking spaces in a close-in lot) is not a substitute for meeting the requirements of this part.

(b) Fixed-route transportation systems operated by public airport operators between the airport and a limited number of destinations in the area it serves are subject to the provisions of this part for commuter bus systems operated by public entities.

(c) Private jitney or shuttle services that provide transportation between an airport and destinations in the area it serves in a route-deviation or other variable mode are subject to the requirements of this part for private entities primarily engaged in the business of transporting people which provide demand responsive service. They may meet equivalency requirements by such means as sharing or pooling accessible vehicles among operators, in a way that ensures the provision of equivalent service.

§ 37.35 Supplemental service for other transportation modes.

(a) Transportation service provided by bus or other vehicle by an intercity commuter or rail operator, as an extension of or supplement to its rail service, and which connects an intercity rail station and limited other points, is subject to the requirements of this part for fixed route commuter bus service operated by a public entity.

(b) Dedicated bus service to commuter rail systems, with through ticketing arrangements and which is available only to users of the commuter rail system, is subject to the requirements of this part for fixed route commuter bus service operated by a public entity.

§ 37.37 Other applications.

(a) A private entity does not become subject to the requirements of this part for public entities, because it receives an operating subsidy from, is regulated by, or is granted a franchise or permit to operate by a public entity.

(b) Shuttle systems and other transportation services operated by privately-owned hotels, car rental agencies, historical or theme parks, and other public accommodations are subject to the requirements of this part for private entities not primarily engaged in the business of transporting people. Either the requirements for

demand responsive or fixed route service may apply, depending upon the characteristics of each individual system of transportation.

(c) Conveyances used by members of the public primarily for recreational purposes rather than for transporation (e.g., amusement park rides, ski lifts, or historic rail cars or trolleys operated in museum settings) are not subject to the requirements of this part. Such conveyances are subject to Department of Justice regulations implementing title II or title III of the ADA (28 CFR part 35 or 36), as applicable.

(d) Transportation services provided by an employer solely for its own employees are not subject to the requirements of this part. Such services are subject to the regulations of the Equal Employment Opportunity Commission under title I of the ADA (29 CFR part 1630) and, with respect to public entities, the regulations of the Department of Justice under title II of the ADA (28 CFR part 35).

(e) Transportation systems operated by private clubs or establishments exempted from coverage under title II of the Civil Rights Act of 1964 (42 U.S.C. 2000–a(e)) or religious organizations or entities controlled by religious organizations are not subject to the requirements of this part.

(f) If a parent private company is not primarily engaged in the business of transporting people, or is not a place of public accommodation, but a subsidiary company or an operationally distinct segment of the company is primarily engaged in the business of transporting people, the transportation service provided by the subsidiary or segment is subject to the requirements of this part for private entities primarily engaged in the business of transporting people.

(g) High-speed rail systems operated by public entities are subject to the requirements of this part governing intercity rail systems.

(h) Private rail systems providing fixed route or specified public transportation service are subject to the requirements of § 37.107 with respect to the acquisition of rail passenger cars. Such systems are subject to the requirements of the regulations of the Department of Justice implementing title III of the ADA (28 CFR part 36) with respect to stations and other facilities.

§ 37.39 [Reserved]

Subpart C—Transportation Facilities

§ 37.41 Construction of transportation facilities by public entities.

A public entity shall construct any new facility to be used in providing designated public transportation services so that the facility is readily accessible to and usable by individuals with disabilities, including individuals who use wheelchairs. This requirement also applies to the construction of a new station for use in intercity or commuter rail transportation. For purposes of this section, a facility or station is "new" if its construction begins (i.e., issuance of notice to proceed) after January 25, 1992, or, in the case of intercity or commuter rail stations, after October 7, 1991.

§ 37.43 Alteration of transportation facilities by public entities.

(a) (1) When a public entity alters an existing facility or a part of an existing facility used in providing designated public transportation services in a way that affects or could affect the usability of the facility or part of the facility, the entity shall make the alterations (or ensure that the alterations are made) in such a manner, to the maximum extent feasible, that the altered portions of the facility are readily accessible to and usable by individuals with disabilities, including individuals who use wheelchairs, upon the completion of such alterations.

(2) When a public entity undertakes an alteration that affects or could affect the usability of or access to an area of a facility containing a primary function, the entity shall make the alteration in such a manner that, to the maximum extent feasible, the path of travel to the altered area and the bathrooms, telephones, and drinking fountains serving the altered area are readily accessible to and usable by individuals with disabilities, including individuals who use wheelchairs, upon completion of the alterations. *Provided,* that alterations to the path of travel, drinking fountains, telephones and bathrooms are not required to be made readily accessible to and usable by individuals with disabilities, including individuals who use wheelchairs, if the cost and scope of doing so would be disproportionate.

(3) The requirements of this paragraph also apply to the alteration of existing intercity or commuter rail stations by the responsible person for, owner of, or person in control of the station.

(4) The requirements of this section apply to any alteration which begins (i.e., issuance of notice to proceed or work order, as applicable) after January 25, 1992, or, in the case of intercity and commuter rail stations, after October 7, 1991.

(b) As used in this section, the phrase *to the maximum extent feasible* applies to the occasional case where the nature of an existing facility makes it impossible to comply fully with applicable accessibility standards through a planned alteration. In these circumstances, the entity shall provide the maximum physical accessibility feasible. Any altered features of the facility or portion of the facility that can be made accessible shall be made accessible. If providing accessibility to certain individuals with disabilities (e.g., those who use wheelchairs) would not be feasible, the facility shall be made accessible to individuals with other types of disabilities (e.g., those who use crutches, those who have impaired vision or hearing, or those who have other impairments).

(c) As used in this section, a *primary function* is a major activity for which the facility is intended. Areas of transportation facilities that involve primary functions include, but are not necessarily limited to, ticket purchase and collection areas, passenger waiting areas, train or bus platforms, baggage checking and return areas and employment areas (except those involving non-occupiable spaces accessed only by ladders, catwalks, crawl spaces, very narrow passageways, or freight (non-passenger) elevators which are frequented only by repair personnel).

(d) As used in this section, a "path of travel" includes a continuous, unobstructed way of pedestrian passage by means of which the altered area may be approached, entered, and exited, and which connects the altered area with an exterior approach (including sidewalks, parking areas, and streets), an entrance to the facility, and other parts of the facility. The term also includes the restrooms, telephones, and drinking fountains serving the altered area. An accessible path of travel may include walks and sidewalks, curb ramps and other interior or exterior pedestrian ramps, clear floor paths through corridors, waiting areas, concourses, and other improved areas, parking access aisles, elevators and lifts, bridges, tunnels, or other passageways between platforms, or a combination of these and other elements.

(e) (1) Alterations made to provide an accessible path of travel to the altered area will be deemed disproportionate to the overall alteration when the cost exceeds 20 percent of the cost of the alteration to the primary function area (without regard to the costs of accessibility modifications).

(2) Costs that may be counted as expenditures required to provide an accessible path of travel include:

(i) Costs associated with providing an accessible entrance and an accessible

route to the altered area (e.g., widening doorways and installing ramps);

(ii) Costs associated with making restrooms accessible (e.g., grab bars, enlarged toilet stalls, accessible faucet controls);

(iii) Costs associated with providing accessible telephones (e.g., relocation of phones to an accessible height, installation of amplification devices or TDDs);

(iv) Costs associated with relocating an inaccessible drinking fountain

(f) (1) When the cost of alterations necessary to make a path of travel to the altered area fully accessible is disproportionate to the cost of the overall alteration, then such areas shall be make accessible to the maximum extent without resulting in disproportionate costs;

(2) In this situation, the public entity should give priority to accessible elements that will provide the greatest access, in the following order:

(i) An accessible entrance;

(ii) An accessible route to the altered area;

(iii) At least one accessible restroom for each sex or a single unisex restroom (where there are one or more restrooms);

(iv) Accessible telephones;

(v) Accessible drinking fountains;

(vi) When possible, other accessible elements (e.g., parking, storage, alarms).

(g) If a public entity performs a series of small alterations to the area served by a single path of travel rather than making the alterations as part of a single undertaking, it shall nonetheless be responsible for providing an accessible path of travel.

(h)(1) If an area containing a primary function has been altered without providing an accessible path of travel to that area, and subsequent alterations of that area, or a different area on the same path of travel, are undertaken within three years of the original alteration, the total cost of alteration to the primary function areas on that path of travel during the preceding three year period shall be considered in determining whether the cost of making that path of travel is disproportionate;

(2) For the first three years after January 26, 1992, only alterations undertaken between that date and the date of the alteration at issue shall be considered in determining if the cost of providing accessible features is disproportionate to the overall cost of the alteration.

(3) Only alterations undertaken after January 26, 1992, shall be considered in determining if the cost of providing an accessible path of travel is disproportionate to the overall cost of the alteration.

§ 37.45 Constructon and alteration of transportation facilities by private entities.

In constructing and altering transit facilities, private entities shall comply with the regulations of the Department of Justice implementing Title III of the ADA (28 CFR part 36).

§ 37.47 Key stations in light and rapid rail systems.

(a) Each public entity that provides designated public transportation by means of a light or rapid rail system shall make key stations on its system readily accessible to and usable by individuals with disabilities, including individuals who use wheelchairs. This requirement is separate from and in addition to requirements set forth in § 37.43 of this part.

(b) Each public entity shall determine which stations on its system are key stations. The entity shall identify key stations, using the planning and public participation process set forth in paragraph (d) of this section, and taking into consideration the following criteria:

(1) Stations where passenger boardings exceed average station passenger boardings on the rail system by at least fifteen percent, unless such a station is close to another accessible station;

(2) Transfer stations on a rail line or between rail lines;

(3) Major interchange points with other transportation modes, including stations connecting with major parking facilities, bus terminals, intercity or commuter rail stations, passenger vessel terminals, or airports;

(4) End stations, unless an end station is close to another accessible station; and

(5) Stations serving major activity centers, such as employment or government centers, institutions of higher education, hospitals or other major health care facilities, or other facilities that are major trip generators for individuals with disabilities.

(c)(1) Unless the entity receives an extension under paragraph (c)(2) of this section, the public entity shall achieve accessibility of key stations as soon as practicable, but in no case later than July 26, 1993.

(2) The UMTA Administrator may grant an extension of this completion date for key station accessibility for a period up to July 26, 2020, provided that two-thirds of key stations are made accessible by July 26, 2010. Extensions may be granted as provided in paragraph (e) of this section.

(d) The public entity shall develop a plan for compliance for this section. The plan shall be submitted to the appropriate UMTA regional office by July 26, 1992. (See appendix B to this part for list.)

(1) The public entity shall consult with individuals with disabilities affected by the plan. The public entity also shall hold at least one public hearing on the plan and solicit comments on it. The plan submitted to UMTA shall document this public participation, including summaries of the consultation with individuals with disabilities and the comments received at the hearing and during the comment period. The plan also shall summarize the public entity's responses to the comments and consultation.

(2) The plan shall establish milestones for the achievement of required accessibility of key stations, consistent with the requirements of this section.

(e) A public entity wishing to apply for an extension of the July 26, 1993, deadline for key station accessibility shall include a request for an extension with its plan submitted to UMTA under paragraph (d) of this section. Extensions may be granted only with respect to key stations which need extraordinarily expensive structural changes to, or replacement of, existing facilities (e.g., installations of elevators, raising the entire passenger platform, or alterations of similar magnitude and cost). Requests for extensions shall provide for completion of key station accessibility within the time limits set forth in paragraph (c) of this section. The UMTA Administrator may approve, approve with conditions, modify, or disapprove any request for an extension.

§ 37.49 Designation of responsible person(s) for intercity and commuter rail stations.

(a) The responsible person(s) designated in accordance with this section shall bear the legal and financial responsibility for making a key station accessible in the same proportion as determined under this section.

(b) In the case of a station more than fifty percent of which is owned by a public entity, the public entity is the responsible party.

(c) In the case of a station more than fifty percent of which is owned by a private entity the persons providing commuter or intercity rail service to the station are the responsible parties, in a proportion equal to the percentage of all passenger boardings at the station attributable to the service of each, over the entire period during which the station is made accessible.

(d) In the case of a station of which no entity owns more than fifty percent, the owners of the station (other than private entity owners) and persons providing intercity or commuter rail service to the station are the responsible persons.

(1) Half the responsibility for the station shall be assumed by the owner(s) of the station. The owners shall share this responsibility in proportion to their ownership interest in the station, over the period during which the station is made accessible.

(2) The person(s) providing commuter or intercity rail service to the station shall assume the other half of the responsibility. These persons shall share this responsibility. These persons shall share this responsibility for the station in a proportion equal to the percentage of all passenger boardings at the station attributable to the service of each, over the period during which the station is made accessible.

(e) Persons who must share responsibility for station accessibility under paragraphs (c) and (d) of this section may, by agreement, allocate their responsibility in a manner different from that provided in this section.

§ 37.51 Key stations in commuter rail systems.

(a) The responsible person(s) shall make key stations on its system readily accessible to and usable by individuals with disabilities, including individuals who use wheelchairs. This requirement is separate from and in addition to requirements set forth in § 37.43 of this part.

(b) Each commuter authority shall determine which stations on its system are key stations. The commuter authority shall identify key stations, using the planning and public participation process set forth in paragraph (d) of this section, and taking into consideration the following criteria:

(1) Stations where passenger boardings exceed average station passenger boardings on the rail system by at least fifteen percent, unless such a station is close to another accessible station;

(2) Transfer stations on a rail line or between rail lines;

(3) Major interchange points with other transportation modes, including stations connecting with major parking facilities, bus terminals, intercity or commuter rail stations, passenger vessel terminals, or airports;

(4) End stations, unless an end station is close to another accessible station; and

(5) Stations serving major activity centers, such as employment or government centers, institutions of higher education, hospitals or other major health care facilities, or other facilities that are major trip generators for individuals with disabilities.

(c)(1) Except as provided in this paragraph, the responsible person(s) shall achieve accessibility of key stations as soon as practicable, but in no case later than July 26, 1993.

(2) The UMTA Administrator may grant an extension of this deadline for key station accessibility for a period up to July 26, 2010. Extensions may be granted as provided in paragraph (e) of this section.

(d) The commuter authority and responsible person(s) for stations involved shall develop a plan for compliance for this section. This plan shall be completed and submitted to UMTA by July 26, 1992.

(1) The commuter authority and responsible person(s) shall consult with individuals with disabilities affected by the plan. The commuter authority and responsible person(s) also shall hold at least one public hearing on the plan and solicit comments on it. The plan shall document this public participation, including summaries of the consultation with individuals with disabilities and the comments received at the hearing and during the comment period. The plan also shall summarize the responsible person(s) responses to the comments and consultation.

(2) The plan shall establish milestones for the achievement of required accessibility of key stations, consistent with the requirements of this section.

(3) The commuter authority and responsible person(s) of each key station identified in the plan shall, by mutual agreement, designate a project manager for the purpose of undertaking the work of making the key station accessible.

(e) Any commuter authority and/or responsible person(s) wishing to apply for an extension of the July 26, 1993, deadline for key station accessibility shall include a request for extension with its plan submitted to under paragraph (d) of this section. Extensions may be granted only in a case where raising the entire passenger platform is the only means available of attaining accessibility or where other extraordinarily expensive structural changes (e.g., installations of elevators, or alterations of magnitude and cost similar to installing an elevator or raising the entire passenger platform) are necessary to attain accessibility. Requests for extensions shall provide for completion of key station accessibility within the time limits set forth in paragraph (c) of this section. The UMTA Administrator may approve, approve with conditions, modify, or disapprove any request for an extension.

§ 37.53 Exception for New York and Philadelphia.

(a) The following agreements entered into in New York, New York, and Philadelphia, Pennsylvania, contain lists of key stations for the public entities that are a party to those agreements for those service lines identified in the agreements. The identification of key stations under these agreements is deemed to be in compliance with the requirements of this Subpart.

(1) Settlement Agreement by and among Eastern Paralyzed Veterans Association, Inc., James J. Peters, Terrance Moakley, and Denise Figueroa, individually and as representatives of the class of all persons similarly situated (collectively, "the EPVA class representatives"); and Metropolitan Transportation Authority, New York City Transit Authority, and Manhattan and Bronx Surface Transit Operating Authority (October 4, 1984).

(2) Settlement Agreement by and between Eastern Paralyzed Veterans Association of Pennsylvania, Inc., and James J. Peters, individually; and Dudley R. Sykes, as Commissioner of the Philadelphia Department of Public Property, and his successors in office and the City of Philadelphia (collectively "the City") and Southeastern Pennsylvania Transportation Authority (June 28, 1989).

(b) To comply with §§ 37.47 (b) and (d) or 37.51 (b) and (d) of this part, the entities named in the agreements are required to use their public participation and planning processes only to develop and submit to the UMTA Administrator plans for timely completion of key station accessibilty, as provided in this subpart.

(c) In making accessible the key stations identified under the agreements cited in this section, the entities named in the agreements are subject to the requirements of § 37.9 of this part.

§ 37.55 Intercity rail station accessibility.

All intercity rail stations shall be made readily accessible to and usable by individuals with disabilities, including individuals who use wheelchairs, as soon as practicable, but in no event later than July 26, 2010. This requirement is separate from and in addition to requirements set forth in § 37.43 of this part.

§ 37.57 Required cooperation.

An owner or person in control of an intercity or commuter rail station shall provide reasonable cooperation to the

responsible person(s) for that station with respect to the efforts of the responsible person to comply with the requirements of this subpart.

§ 37.59 Differences in accessibility completion dates.

Where different completion dates for accessible stations are established under this part for a station or portions of a station (e.g., extensions of different periods of time for a station which serves both rapid and commuter rail systems), accesssibility to the following elements of the station shall be achieved by the earlier of the completion dates involved:

(a) Common elements of the station;

(b) Portions of the facility directly serving the rail system with the earlier completion date; and

(c) An accessible path from common elements of the station to portions of the facility directly serving the rail system with the earlier completion date.

§ 37.61 Public transportation programs and activities in existing facilities.

(a) A public entity shall operate a designated public transportation program or activity conducted in an existing facility so that, when viewed in its entirety, the program or activity is readily accessible to and usable by individuals with disabilities.

(b) This section does not require a public entity to make structural changes to existing facilities in order to make the facilities accessible by individuals who use wheelchairs, unless and to the extent required by § 37.43 (with respect to alterations) or §§ 37.47 or 37.51 of this part (with respect to key stations). Entities shall comply with other applicable accessibility requirements for such facilities.

(c) Public entities, with respect to facilities that, as provided in paragraph (b) of this section, are not required to be made accessible to individuals who use wheelchairs, are not required to provide to such individuals services made available to the general public at such facilities when the individuals could not utilize or benefit from the services.

§§ 37.63–37.69 [Reserved]

Subpart D—Acquisition of Accessible Vehicles By Public Entities

§ 37.71 Purchase or lease of new non-rail vehicles by public entities operating fixed route systems.

(a) Except as provided elsewhere in this section, each public entity operating a fixed route system making a solicitation after August 25, 1990, to purchase or lease a new bus or other new vehicle for use on the system, shall ensure that the vehicle is readily accessible to and usable by individuals with disabilities, including individuals who use wheelchairs.

(b) A pubilc entity may purchase or lease a new bus that is not readily accessible to and usable by individuals with disabilities, including individuals who use wheelchairs, if it applies for, and the UMTA Administrator grants, a waiver as provided for in this section.

(c) Before submitting a request for such a waiver, the public entity shall hold at least one public hearing concerning the proposed request.

(d) The UMTA Administrator may grant a request for such a waiver if the public entity demonstrates to the UMTA Administrator's satisfaction that—

(1) The initial solicitation for new buses made by the public entity specified that all new buses were to be lift-equipped and were to be otherwise accessible to and usable by individuals with disabilities;

(2) Hydraulic, electromechanical, or other lifts for such new buses could not be provided by any qualified lift manufacturer to the manufacturer of such new buses in sufficient time to comply with the solicitation; and

(3) Any further delay in purchasing new buses equipped with such necessary lifts would significantly impair transportation services in the community served by the public entity.

(e) The public entity shall include with its waiver request a copy of the initial solicitation and written documentation from the bus manufacturer of its good faith efforts to obtain lifts in time to comply with the solicitation, and a full justification for the assertion that the delay in bus procurement needed to obtain a lift-equipped bus would significantly impair transportation services in the community. This documentation shall include a specific date at which the lifts could be supplied, copies of advertisements in trade publications and inquiries to trade associations seeking lifts, and documentation of the public hearing.

(f) Any waiver granted by the UMTA Administrator under this section shall be subject to the following conditions:

(1) The waiver shall apply only to the particular bus delivery to which the waiver request pertains;

(2) The waiver shall include a termination date, which will be based on information concerning when lifts will become available for installation on the new buses the public entity is purchasing. Buses delivered after this date, even though procured under a solicitation to which a waiver applied, shall be equipped with lifts;

(3) Any bus obtained subject to the waiver shall be capable of accepting a lift, and the public entity shall install a lift as soon as one becomes available;

(4) Such other terms and conditions as the UMTA Administrator may impose.

(g)(1) When the UMTA Administrator grants a waiver under this section, he/she shall promptly notify the appropriate committees of Congress.

(2) If the UMTA Administrator has reasonable cause to believe that a public entity fraudulently applied for a waiver under this section, the UMTA Administrator shall:

(i) Cancel the waiver if it is still in effect; and

(ii) Take other appropriate action.

§ 37.73 Purchase or lease of used non-rail vehicles by public entities operating fixed route systems.

(a) Except as provided elsewhere in this section, each public entity operating a fixed route system purchasing or leasing, after August 25, 1990, a used bus or other used vehicle for use on the system, shall ensure that the vehicle is readily accessible to and usable by individuals with disabilities, including individuals who use wheelchairs.

(b) A public entity may purchase or lease a used vehicle for use on its fixed route system that is not readily accessible to and usable by individuals with disabilities if, after making demonstrated good faith efforts to obtain an accessible vehicle, it is unable to do so.

(c) Good faith efforts shall include at least the following steps:

(1) An initial solicitation for used vehicles specifying that all used vehicles are to be lift-equipped and otherwise accessible to and usable by individuals with disabilities, or, if an initial solicitation is not used, a documented communication so stating;

(2) A nationwide search for accessible vehicles, involving specific inquiries to used vehicle dealers and other transit providers; and

(3) Advertising in trade publications and contacting trade associations.

(d) Each public entity purchasing or leasing used vehicles that are not readily accessible to and usable by individuals with disabilities shall retain documentation of the specific good faith efforts it made for three years from the date the vehicles were purchased. These records shall be made available, on request, to the UMTA Administrator and the public.

§ 37.75 Remanufacture of non-rail vehicles and purchase or lease of remanufactured non-rail vehicles by public entities operating fixed route systems.

(a) This section applies to any public entity operating a fixed route system which takes one of the following actions:

(1) After August 25, 1990, remanufactures a bus or other vehicle so as to extend its useful life for five years or more or makes a solicitation for such remanufacturing; or

(2) Purchases or leases a bus or other vehicle which has been remanufactured so as to extend its useful life for five years or more, where the purchase or lease occurs after August 25, 1990, and during the period in which the useful life of the vehicle is extended.

(b) Vehicles acquired through the actions listed in paragraph (a) of this section shall, to the maximum extent feasible, be readily accessible to and usable by individuals with disabilities, including individuals who use wheelchairs.

(c) For purposes of this section, it shall be considered feasible to remanufacture a bus or other motor vehicle so as to be readily accessible to and usable by individuals with disabilities, including individuals who use wheelchairs, unless an engineering analysis demonstrates that including accessibility features required by this part would have a significant adverse effect on the structural integrity of the vehicle.

(d) If a public entity operates a fixed route system, any segment of which is included on the National Register of Historic Places, and if making a vehicle of historic character used solely on such segment readily accessible to and usable by individuals with disabilities would significantly alter the historic character of such vehicle, the public entity has only to make (or purchase or lease a remanufactured vehicle with) those modifications to make the vehicle accessible which do not alter the historic character of such vehicle, in consultation with the National Register of Historic Places.

(e) A public entity operating a fixed route system as described in paragraph (d) of this section may apply in writing to the UMTA Administrator for a determination of the historic character of the vehicle. The UMTA Administrator shall refer such requests to the National Register of Historic Places, and shall rely on its advice in making determinations of the historic character of the vehicle.

§ 37.77 Purchase or lease of new non-rail vehicles by public entities operating a demand responsive system for the general public.

(a) Except as provided in this section, a public entity operating a demand responsive system for the general public making a solicitation after August 25, 1990, to purchase or lease a new bus or other new vehicle for use on the system, shall ensure that the vehicle is readily accessible to and usable by individuals with disabilities, including individuals who use wheelchairs.

(b) If the system, when viewed in its entirety, provides a level of service to individuals with disabilities, including individuals who use wheelchairs, equivalent to the level of service it provides to individuals without disabilities, it may purchase new vehicles that are not readily accessible to and usable by individuals with disabilities.

(c) For purposes of this section, a demand responsive system, when viewed in its entirety, shall be deemed to provide equivalent service if the service available to individuals with disabilities, including individuals who use wheelchairs, is provided in the most integrated setting appropriate to the needs of the individual and is equivalent to the service provided other individuals with respect to the following service characteristics:

(1) Response time;

(2) Fares;

(3) Geographic area of service;

(4) Hours and days of service;

(5) Restrictions or priorities based on trip purpose;

(6) Availability of information and reservations capability; and

(7) Any constraints on capacity or service availability.

(d) A public entity receiving UMTA funds under section 18 or a public entity in a small urbanized area which receives UMTA funds under Section 9 from a state administering agency rather than directly from UMTA, which determines that its service to individuals with disabilities is equivalent to that provided other persons shall, before any procurement of an inaccessible vehicle, file with the appropriate state program office a certificate that it provides equivalent service meeting the standards of paragraph (c) of this section. Public entities operating demand responsive service receiving funds under any other section of the UMT Act shall file the certificate with the appropriate UMTA regional office. A public entity which does not receive UMTA funds shall make such a certificate and retain it in its files, subject to inspection on request of UMTA. All certificates under this paragraph may be made and filed in connection with a particular procurement or in advance of a procurement; however, no certificate shall be valid for more than one year. A copy of the required certificate is found in appendix C to this part.

(e) The waiver mechanism set forth in § 37.71(b)–(g) (unavailability of lifts) of this subpart shall also be available to public entities operating a demand responsive system for the general public.

§ 37.79 Purchase or lease of new rail vehicles by public entities operating rapid or light rail systems.

Each public entity operating a rapid or light rail system making a solicitation after August 25, 1990, to purchase or lease a new rapid or light rail vehicle for use on the system shall ensure that the vehicle is readily accessible to and usable by individuals with disabilities, including individuals who use wheelchairs.

§ 37.81 Purchase or lease of used rail vehicles by public entities operating rapid or light rail systems.

(a) Except as provided elsewhere in this section, each public entity operating a rapid or light rail system which, after August 25, 1990, purchases or leases a used rapid or light rail vehicle for use on the system shall ensure that the vehicle is readily accessible to and usable by individuals with disabilities, including individuals who use wheelchairs.

(b) A public entity may purchase or lease a used rapid or light rail vehicle for use on its rapid or light rail system that is not readily accessible to and usable by individuals if, after making demonstrated good faith efforts to obtain an accessible vehicle, it is unable to do so.

(c) Good faith efforts shall include at least the following steps:

(1) The initial solicitation for used vehicles made by the public entity specifying that all used vehicles were to be accessible to and usable by individuals with disabilities, or, if a solicitation is not used, a documented communication so stating;

(2) A nationwide search for accessible vehicles, involving specific inquiries to manufacturers and other transit providers; and

(3) Advertising in trade publications and contacting trade associations.

(d) Each public entity purchasing or leasing used rapid or light rail vehicles that are not readily accessible to and usable by individuals with disabilities shall retain documentation of the specific good faith efforts it made for three years from the date the vehicles

were purchased. These records shall be made available, on request, to the UMTA Administrator and the public.

§ 37.83 Remanufacture of rail vehicles and purchase or lease of remanufactured rail vehicles by public entities operating rapid or light rail systems.

(a) This section applies to any public entity operating a rapid or light rail system which takes one of the following actions:

(1) After August 25, 1990, remanufactures a light or rapid rail vehicle so as to extend its useful life for five years or more or makes a solicitation for such remanufacturing;

(2) Purchases or leases a light or rapid rail vehicle which has been remanufactured so as to extend its useful life for five years or more, where the purchase or lease occurs after August 25, 1990, and during the period in which the useful life of the vehicle is extended.

(b) Vehicles acquired through the actions listed in paragraph (a) of this section shall, to the maximum extent feasible, be readily accessible to and usable by individuals with disabilities, including individuals who use wheelchairs.

(c) For purposes of this section, it shall be considered feasible to remanufacture a rapid or light rail vehicle so as to be readily accessible to and usable by individuals with disabilities, including individuals who use wheelchairs, unless an engineering analysis demonstrates that doing so would have a significant adverse effect on the structural integrity of the vehicle.

(d) If a public entity operates a rapid or light rail system any segment of which is included on the National Register of Historic Places and if making a rapid or light rail vehicle of historic character used solely on such segment readily accessible to and usable by individuals with disabilities would significantly alter the historic character of such vehicle, the public entity need only make (or purchase or lease a remanufactured vehicle with) those modifications that do not alter the historic character of such vehicle.

(e) A public entity operating a fixed route system as described in paragraph (d) of this section may apply in writing to the UMTA Administrator for a determination of the historic character of the vehicle. The UMTA Administrator shall refer such requests to the National Register of Historic Places and shall rely on its advice in making a determination of the historic character of the vehicle.

§ 37.85 Purchase or lease of new intercity and commuter rail cars.

Amtrak or a commuter authority making a solicitation after August 25, 1990, to purchase or lease a new intercity or commuter rail car for use on the system shall ensure that the vehicle is readily accessible to and usable by individuals with disabilities, including individuals who use wheelchairs.

§ 37.87 Purchase or lease of used intercity and commuter rail cars.

(a) Except as provided elsewhere in this section, Amtrak or a commuter authority purchasing or leasing a used intercity or commuter rail car after August 25, 1990, shall ensure that the car is readily accessible to and usable by individuals with disabilities, including individuals who use wheelchairs.

(b) Amtrak or a commuter authority may purchase or lease a used intercity or commuter rail car that is not readily accessible to and usable by individuals if, after making demonstrated good faith efforts to obtain an accessible vehicle, it is unable to do so.

(c) Good faith efforts shall include at least the following steps:

(1) An initial solicitation for used vehicles specifying that all used vehicles accessible to and usable by individuals with disabilities;

(2) A nationwide search for accessible vehicles, involving specific inquiries to used vehicle dealers and other transit providers; and

(3) Advertising in trade publications and contacting trade associations.

(d) Amtrak and commuter authorities purchasing or leasing used intercity or commuter rail cars that are not readily accessible to and usable by individuals with disabilities shall retain documentation of the specific good faith efforts that were made for three years from the date the cars were purchased. These records shall be made available, to request, to the Federal Railroad Administration or UMTA Administrator, as applicable. These records shall be made available to the public, on request.

§ 37.89 Remanufacture of intercity and commuter rail cars and purchase or lease of remanufactured intercity and commuter rail cars.

(a) This section applies to Amtrak or a commuter authority which takes one of the following actions:

(1) Remanufactures an intercity or commuter rail car so as to extend its useful life for ten years or more;

(2) Purchases or leases an intercity or commuter rail car which has been remanufactured so as to extend its useful life for ten years or more.

(b) Intercity and commuter rail cars listed in paragraph (a) of this section shall, to the maximum extent feasible, be readily accessible to and usable by individuals with disabilities, including individuals who use wheelchairs.

(c) For purposes of this section, it shall be considered feasible to remanufacture an intercity or commuter rail car so as to be readily accessible to and usable by individuals with disabilities, including individuals who use wheelchairs, unless an engineering analysis demonstrates that remanufacturing the car to be accessible would have a significant adverse effect on the structural integrity of the car.

§ 37.91 Wheelchair locations and food service on intercity rail trains.

(a) As soon as practicable, but in no event later than July 26, 1995, each person providing intercity rail service shall provide on each train a number of spaces—

(1) To park wheelchairs (to accommodate individuals who wish to remain in their wheelchairs) equal to not less than one half of the number of single level rail passenger coaches in the train; and

(2) To fold and store wheelchairs (to accommodate individuals who wish to transfer to coach seats) equal to not less than one half the number of single level rail passenger coaches in the train.

(b) As soon as practicable, but in no event later than July 26, 2000, each person providing intercity rail service shall provide on each train a number of spaces—

(1) To park wheelchairs (to accommodate individuals who wish to remain in their wheelchairs) equal to not less than the total number of single level rail passenger coaches in the train; and

(2) To fold and store wheelchairs (to accommodate individuals who wish to transfer to coach seats) equal to not less than the total number of single level rail passenger coaches in the train.

(c) In complying with paragraphs (a) and (b) of this section, a person providing intercity rail service may not provide more than two spaces to park wheelchairs nor more than two spaces to fold and store wheelchairs in any one coach or food service car.

(d) Unless not practicable, a person providing intercity rail transportation shall place an accessible car adjacent to the end of a single level dining car through which an individual who uses a wheelchair may enter.

(e) On any train in which either a single level or bi-level dining car is used to provide food service, a person providing intercity rail service shall

provide appropriate aids and services to ensure that equivalent food service is available to individuals with disabilities, including individuals who use wheelchairs, and to passengers traveling with such individuals. Appropriate auxiliary aids and services include providing a hard surface on which to eat.

(f) This section does not require the provision of securement devices on intercity rail cars.

§ 37.93 One car per train rule.

(a) The definition of accessible for purposes of meeting the one car per train rule is spelled out in the applicable subpart for each transportation system type in part 38 of this title.

(b) Each person providing intercity rail service and each commuter rail authority shall ensure that, as soon as practicable, but in no event later than July 26, 1995, that each train has one car that is readily accessible to and usable by individuals with disabilities, including individuals who use wheelchairs.

(c) Each public entity providing light or rapid rail service shall ensure that each train, consisting of two or more vehicles, includes at least one car that is readily accessible to and usable by individuals with disabilities, including individuals who use wheelchairs, as soon as practicable but in no case later than July 25, 1995.

§ 37.95 Ferries and other passenger vessels operated by public entities. [Reserved]

§§ 37.97–37.99 [Reserved]

Subpart E—Acquisition of Accessible Vehicles By Private Entities

§ 37.101 Purchase or lease of vehicles by private entities not primarily engaged in the business of transporting people.

(a) *Application.* This section applies to all purchases or leases of vehicles by private entities which are not primarily engaged in the business of transporting people, in which a solicitation for the vehicle is made after August 25, 1990.

(b) *Fixed Route System. Vehicle Capacity Over 16.* If the entity operates a fixed route system and purchases or leases a vehicle with a seating capacity of over 16 passengers (including the driver) for use on the system, it shall ensure that the vehicle is readily accessible to and usable by individuals with disabilities, including individuals who use wheelchairs.

(c) *Fixed Route System. Vehicle Capacity of 16 or Fewer.* If the entity operates a fixed route system and purchases or leases a vehicle with a seating capacity of 16 or fewer passengers (including the driver) for use on the system, it shall ensure that the vehicle is readily accessible to and usable by individuals with disabilities, including individuals who use wheelchairs, unless the system, when viewed in its entirety, meets the standard for equivalent service of § 37.105 of this part.

(d) *Demand Responsive System, Vehicle Capacity Over 16.* If the entity operates a demand responsive system, and purchases or leases a vehicle with a seating capacity of over 16 passengers (including the driver) for use on the system, it shall ensure that the vehicle is readily accessible to and usable by individuals with disabilities, including individuals who use wheelchairs, unless the system, when viewed in its entirety, meets the standard for equivalent service of § 37.105 of this part.

§ 37.103 Purchase or lease of new non-rail vehicles by private entities primarily engaged in the business of transporting people.

(a) *Application.* This section applies to all acquisitions of new vehicles by private entities which are primarily engaged in the business of transporting people and whose operations affect commerce, in which a solicitation for the vehicle is made (except as provided in paragraph (d) of this section) after August 25, 1990.

(b) *Fixed Route Systems.* If the entity operates a fixed route system, and purchases or leases a new vehicle other than an automobile, a van with a seating capacity of less than eight persons (including the driver), or an over-the-road bus, it shall ensure that the vehicle is readily accessible to and usable by individuals with disabilities, including individuals who use wheelchairs.

(c) *Demand Responsive Systems.* If the entity operates a demand responsive system, and purchases or leases a new vehicle other than an automobile, a van with a seating capacity of less than eight persons (including the driver), or an over-the-road bus, it shall ensure that the vehicle is readily accessible to and usable by individuals with disabilities, including individuals who use wheelchairs, unless the system, when viewed in its entirety, meets the standard for equivalent service of § 37.105 of this part.

(d) *Vans with a Capacity of Fewer than 8 Persons.* If the entity operates either a fixed route or demand responsive system, and purchases or leases a new van with a seating capacity of fewer than eight persons including the driver (the solicitation for the vehicle being made after February 25, 1992), the entity shall ensure that the vehicle is readily accessible to and usable by individuals with disabilities, including individuals who use wheelchairs, unless the system, when viewed in its entirety, meets the standard for equivalent service of § 37.105 of this part.

§ 37.105 Equivalent service standard.

For purposes of §§ 37.101 and 37.103 of this part, a fixed route system or demand responsive system, when viewed in its entirety, shall be deemed to provide equivalent service if the service available to individuals with disabilities, including individuals who use wheelchairs, is provided in the most integrated setting appropriate to the needs of the individual and is equivalent to the service provided other individuals with respect to the following service characteristics:

(a) (1) Schedules/headways (if the system is fixed route);

(2) Response time (if the system is demand responsive);

(b) Fares;

(c) Geographic area of service;

(d) Hours and days of service;

(e) Availability of information;

(f) Reservations capability (if the system is demand responsive);

(g) Any constraints on capacity or service availability;

(h) Restrictions priorities based on trip purpose (if the system is demand responsive).

§ 37.107 Acquisition of passenger rail cars by private entities primarily engaged in the business of transporting people.

(a) A private entity which is primarily engaged in the business of transporting people and whose operations affect commerce, which makes a solicitation after February 25, 1992, to purchase or lease a new rail passenger car to be used in providing specified public transportation, shall ensure that the car is readily accessible to, and usable by, individuals with disabilities, including individuals who use wheelchairs. The accessibility standards in part 38 of this title which apply depend upon the type of service in which the car will be used.

(b) Except as provided in paragraph (c) of this section, a private entity which is primarily engaged in transporting people and whose operations affect commerce, which remanufactures a rail passenger car to be used in providing specified public transportation to extend its useful life for ten years or more, or purchases or leases such a remanufactured rail car, shall ensure that the rail car, to the maximum extent feasible, is made readily accessible to

and usable by individuals with disabilities, including individuals who use wheelchairs. For purposes of this paragraph, it shall be considered feasible to remanufacture a rail passenger car to be readily accessible to and usable by individuals with disabilities, including individuals who use wheelchairs, unless an engineering analysis demonstrates that doing so would have a significant adverse effect on the structural integrity of the car.

(c) Compliance with paragraph (b) of this section is not required to the extent that it would significantly alter the historic or antiquated character of a historic or antiquated rail passenger car, or a rail station served exclusively by such cars, or would result in the violation of any rule, regulation, standard or order issued by the Secretary under the Federal Railroad Safety Act of 1970. For purposes of this section, a historic or antiquated rail passenger car means a rail passenger car—

(1) Which is not less than 30 years old at the time of its use for transporting individuals;

(2) The manufacturer of which is no longer in the business of manufacturing rail passenger cars; and

(3) Which—

(i) Has a consequential association with events or persons significant to the past; or

(ii) Embodies, or is being restored to embody, the distinctive characteristics of a type of rail passenger car used in the past, or to represent a time period which has passed.

§ 37.109 Ferries and other passenger vessels operated by private entities. [Reserved]

§ 37.111–37.119 [Reserved]

Subpart F—Paratransit as a Complement to Fixed Route Service

§ 37.121 Requirement for comparable complementary paratransit service.

(a) Except as provided in paragraph (c) of this section, each public entity operating a fixed route system shall provide paratransit or other special service to individuals with disabilities that is comparable to the level of service provided to individuals without disabilities who use the fixed route system.

(b) To be deemed comparable to fixed route service, a complementary paratransit system shall meet the requirements of §§ 37.123–37.133 of this subpart. The requirement to comply with § 37.131 may be modified in accordance with the provisions of this subpart relating to undue financial burden.

(c) Requirements for complementary paratransit do not apply to commuter bus, commuter rail, or intercity rail systems.

§ 37.123 ADA paratransit eligibility: Standards.

(a) Public entities required by § 37.121 of this subpart to provide complementary paratransit service shall provide the service to the ADA paratransit eligible individuals described in paragraph (e) of this section.

(b) If an individual meets the eligibility criteria of this section with respect to some trips but not others, the individual shall be ADA paratransit eligible only for those trips for which he or she meets the criteria.

(c) Individuals may be ADA paratransit eligible on the basis of a permanent or temporary disability.

(d) Public entities may provide complementary paratransit service to persons other than ADA paratransit eligible individuals. However, only the cost of service to ADA paratransit eligible individuals may be considered in a public entity's request for an undue financial burden waiver under §§ 37.151–37.155 of this part.

(e) The following individuals are ADA paratransit eligible:

(1) Any individual with a disability who is unable, as the result of a physical or mental impairment (including a vision impairment), and without the assistance of another individual (except the operator of a wheelchair lift or other boarding assistance device), to board, ride, or disembark from any vehicle on the system which is readily accessible to and usable individuals with disabilities.

(2) Any individual with a disability who needs the assistance of a wheelchair lift or other boarding assistance device and is able, with such assistance, to board, ride and disembark from any vehicle which is readily accessible to and usable by individuals with disabilities if the individual wants to travel on a route on the system during the hours of operation of the system at a time, or within a reasonable period of such time, when such a vehicle is not being used to provide designated public transportation on the route.

(i) An individual is eligible under this paragraph with respect to travel on an otherwise accessible route on which the boarding or disembarking location which the individual would use is one at which boarding or disembarking from the vehicle is precluded as provided in § 37.167(g) of this part.

(ii) An individual using a common wheelchair is eligible under this paragraph if the individual's wheelchair cannot be accommodated on an existing vehicle (e.g., because the vehicle's lift does not meet the standards of part 38 of this title), even if that vehicle is accessible to other individuals with disabilities and their mobility wheelchairs.

(iii) With respect to rail systems, an individual is eligible under this paragraph if the individual could use an accessible rail system, but—

(A) there is not yet one accessible car per train on the system; or

(B) key stations have not yet been made accessible.

(3) Any individual with a disability who has a specific impairment-related condition which prevents such individual from traveling to a boarding location or from a disembarking location on such system.

(i) Only a specific impairment-related condition which prevents the individual from traveling to a boarding location or from a disembarking location is a basis for eligibility under this paragraph. A condition which makes traveling to boarding location or from a disembarking location more difficult for a person with a specific impairment-related condition than for an individual who does not have the condition, but does not prevent the travel, is not a basis for eligibility under this paragraph.

(ii) Architectural barriers not under the control of the public entity providing fixed route service and environmental barriers (e.g., distance, terrain, weather) do not, standing alone, form a basis for eligibility under this paragraph. The interaction of such barriers with an individual's specific impairment-related condition may form a basis for eligibility under this paragraph, if the effect is to prevent the individual from traveling to a boarding location or from a disembarking location.

(f) Individuals accompanying an ADA paratransit eligible individual shall be provided service as follows:

(1) One other individual accompanying the ADA paratransit eligible individual shall be provided service—

(i) If the ADA paratransit eligible individual is traveling with a personal care attendant, the entity shall provide service to one other individual in addition to the attendant who is accompanying the eligible individual;

(ii) A family member or friend is regarded as a person accompanying the eligible individual, and not as a personal care attendant, unless the family member or friend registered is acting in the capacity of a personal care attendant;

(2) Additional individuals accompanying the ADA paratransit eligible individual shall be provided service, provided that space is available for them on the paratransit vehicle carrying the ADA paratransit eligible individual and that transportation of the additional individuals will not result in a denial of service to ADA paratransit eligible individuals;

(3) In order to be considered as "accompanying" the eligible individual for purposes of this paragraph (f), the other individual(s) shall have the same origin and destination as the eligible individual.

§ 37.125 ADA paratransit eligibility: Process.

Each public entity required to provide complementary paratransit service by § 37.121 of this part shall establish a process for determining ADA paratransit eligibility.

(a) The process shall strictly limit ADA paratransit eligibility to individuals specified in § 37.123 of this part.

(b) All information about the process, materials necessary to apply for eligibility, and notices and determinations concerning eligibility shall be made available in accessible formats, upon request.

(c) If, by a date 21 days following the submission of a complete application, the entity has not made a determination of eligibility, the applicant shall be treated as eligible and provided service until and unless the entity denies the application.

(d) The entity's determination concerning eligibility shall be in writing. If the determination is that the individual is ineligible, the determination shall state the reasons for the finding.

(e) The public entity shall provide documentation to each eligible individual stating that he or she is "ADA Paratransit Eligible." The documentation shall include the name of the eligible individual, the name of the transit provider, the telephone number of the entity's paratransit coordinator, an expiration date for eligibility, and any conditions or limitations on the individual's eligibility including the use of a personal care attendant.

(f) The entity may require recertification of the eligibility of ADA paratransit eligible individuals at reasonable intervals.

(g) The entity shall establish an administrative appeal process through which individuals who are denied eligibility can obtain review of the denial.

(1) The entity may require that an appeal be filed within 60 days of the denial of an individual's application.

(2) The process shall include an opportunity to be heard and to present information and arguments, separation of functions (i.e., a decision by a person not involved with the initial decision to deny eligibility), and written notification of the decision, and the reasons for it.

(3) The entity is not required to provide paratransit service to the individual pending the determination on appeal. However, if the entity has not made a decision within 30 days of the completion of the appeal process, the entity shall provide paratransit service from that time until and unless a decision to deny the appeal is issued.

(h) The entity may establish an administrative process to suspend, for a reasonable period of time, the provision of complementary paratransit service to ADA eligible individuals who establish a pattern or practice of missing scheduled trips.

(1) Trips missed by the individual for reasons beyond his or her control (including, but not limited to, trips which are missed due to operator error) shall not be a basis for determining that such a pattern or practice exists.

(2) Before suspending service, the entity shall take the following steps:

(i) Notify the individual in writing that the entity proposes to suspend service, citing with specificity the basis of the proposed suspension and setting forth the proposed sanction.

(ii) Provide the individual an opportunity to be heard and to present information and arguments;

(iii) Provide the individual with written notification of the decision and the reasons for it.

(3) The appeals process of paragraph (g) of this section is available to an individual on whom sanctions have been imposed under this paragraph. The sanction is stayed pending the outcome of the appeal.

(i) In applications for ADA paratransit eligibility, the entity may require the applicant to indicate whether or not he or she travels with a personal care attendant.

§ 37.127 Complementary paratransit service for visitors.

(a) Each public entity required to provide complementary paratransit service under § 37.121 of this part shall make the service available to visitors as provided in this section.

(b) For purposes of this section, a visitor is an individual with disabilities who does not reside in the jurisdiction(s) served by the public entity or other entities with which the public entity provides coordinated complementary paratransit service within a region.

(c) Each public entity shall treat as eligible for its complementary paratransit service all visitors who present documentation that they are ADA paratransit eligible, under the criteria of § 37.125 of this part, in the jurisdiction in which they reside.

(d) With respect to visitors with disabilities who do not present such documentation, the public entity may require the documentation of the individual's place of residence and, if the individual's disability is not apparent, of his or her disability. The entity shall provide paratransit service to individuals with disabilities who qualify as visitors under paragraph (b) of this section. The entity shall accept a certification by such individuals that they are unable to use fixed route transit.

(e) A public entity is not required to provide service to a visitor for more than 21 days from the date of the first paratransit trip used by the visitor. The entity may require that such an individual, in order to receive service beyond this period, apply for eligibility under the process provided for in § 37.125 of this part.

§ 37.129 Types of service.

(a) Except as provided in this section, complementary paratransit service for ADA paratransit eligible persons shall be origin-to-destination service.

(b) Complementary paratransit service for ADA paratransit eligible persons described in § 37.123(e)(2) of this part may also be provided by on-call bus service or paratransit feeder service to an accessible fixed route, where such service enables the individual to use the fixed route bus system for his or her trip.

(c) Complementary paratransit service for ADA eligible persons described in § 37.123(e)(3) of this part also may be provided by paratransit feeder service to and/or from an accessible fixed route.

§ 37.131 Service criteria for complementary paratransit.

The following service criteria apply to complementary paratransit required by § 37.121 of this part.

(a) *Service Area*—(1) *Bus.* (i) The entity shall provide complementary paratransit service to origins and destinations within corridors with a width of three-fourths of a mile on each side of each fixed route. The corridor shall include an area with a three-

fourths of a mile radius at the ends of each fixed route.

(ii) Within the core service area, the entity also shall provide service to small areas not inside any of the corridors but which are surrounded by corridors.

(iii) Outside the core service area, the entity may designate corridors with widths from three fourths of a mile up to one and one half miles on each side of a fixed route, based on local circumstances.

(iv) For purposes of this paragraph, the core service area is that area in which corridors with a width of three-fourths of a mile on each side of each fixed route merge together such that, with few and small exceptions, all origins and destinations within the area would be served.

(2) *Rail.* (i) For rail systems, the service area shall consist of a circle with a radius of ¾ of a mile around each station.

(ii) At end stations and other stations in outlying areas, the entity may designate circles with radii of up to 1½ miles as part of its service area, based on local circumstances.

(3) *Jurisdictional Boundaries.* Notwithstanding any other provision of this paragraph, an entity is not required to provide paratransit service in an area outside the boundaries of the jurisdiction(s) in which it operates, if the entity does not have legal authority to operate in that area. The entity shall take all practicable steps to provide paratransit service to any part of its service area.

(b) *Response Time.* The entity shall schedule and provide paratransit service to any ADA paratransit eligible person at any requested time on a particular day in response to a request for service made the previous day. Reservations may be taken by reservation agents or by mechanical means.

(1) The entity shall make reservation service available during at least all normal business hours of the entity's administrative offices, as well as during times, comparable to normal business hours, on a day when the entity's offices are not open before a service day.

(2) The entity may negotiate pickup times with the individual, but the entity shall not require an ADA paratransit eligible individual to schedule a trip to begin more than one hour before or after the individual's desired departure time.

(3) The entity may use real-time scheduling in providing complementary paratransit service.

(4) The entity shall permit advance reservations to be made up to 14 days in advance of an ADA paratransit eligible individual's desired trip.

(c) *Fares.* The fare for a trip charged to an ADA paratransit eligible user of the complementary paratransit service shall not exceed twice the fare that would be charged to an individual paying full fare (i.e., without regard to discounts) for a trip of similar length, at a similar time of day, on the entity's fixed route system.

(1) In calculating the full fare that would be paid by an individual using the fixed route system, the entity may include transfer and premium charges applicable to a trip of similar length, at a similar time of day, on the fixed route system.

(2) The fares for individuals accompanying ADA paratransit eligible individuals, who are provided service under § 37.123 (f) of this part, shall be the same as for the ADA paratransit eligible individuals they are accompanying.

(3) A personal care attendant shall not be charged for complementary paratransit service.

(4) The entity may charge a fare higher than otherwise permitted by this paragraph to a social service agency or other organization for agency trips (i.e., trips guaranteed to the organization).

(d) *Trip Purpose Restrictions.* The entity shall not impose restrictions or priorities based on trip purpose.

(e) *Hours and Days of Service.* The complementary paratransit service shall be available throughout the same hours and days as the entity's fixed route service.

(f) *Capacity Constraints.* The entity shall not limit the availability of complementary paratransit service to ADA paratransit eligible individuals by any of the following:

(1) Restrictions on the number of trips an individual will be provided;

(2) Waiting lists for access to the service; or

(3) Any operational pattern or practice that significantly limits the availability of service to ADA paratransit eligible persons.

(i) Such patterns or practices include, but are not limited to, the following:

(A) Substantial numbers of significantly untimely pickups for initial or return trips;

(B) Substantial numbers of trip denials or missed trips;

(C) Substantial numbers of trips with excessive trip lengths.

(ii) Operational problems attributable to causes beyond the control of the entity (including, but not limited to, weather or traffic conditions affecting all vehicular traffic that were not anticipated at the time a trip was scheduled) shall not be a basis for determining that such a pattern or practice exists.

(g) *Additional Service.* Public entities may provide complementary paratransit service to ADA paratransit eligible individuals exceeding that provided for in this section. However, only the cost of service provided for in this section may be considered in a public entity's request for an undue financial burden waiver under §§ 37.151–37.155 of this part.

§ 37.133 Subscription service.

(a) This part does not prohibit the use of subscription service by public entities as part of a complementary paratransit system, subject to the limitations in this section.

(b) Subscription service may not absorb more than fifty percent of the number of trips available at a given time of day, unless there is non-subscription capacity.

(c) Notwithstanding any other provision of this part, the entity may establish waiting lists or other capacity constraints and trip purpose restrictions or priorities for participation in the subscription service only.

§ 37.135 Submission of paratransit plan.

(a) *General.* Each public entity operating fixed route transportation service, which is required by § 37.121 to provide complementary paratransit service, shall develop a paratransit plan.

(b) *Initial Submission.* Except as provided in § 37.141 of this part, each entity shall submit its initial plan for compliance with the complementary paratransit service provision by January 26, 1992, to the appropriate location identified in paragraph (f) of this section.

(c) *Annual Updates.* Each entity shall submit an annual update to the plan on January 26 of each succeeding year.

(d) *Phase-in of Implementation.* Each plan shall provide full compliance by no later than January 26, 1997, unless the entity has received a waiver based on undue financial burden. If the date for full compliance specified in the plan is after January 26, 1993, the plan shall include milestones, providing for measured, proportional progress toward full compliance.

(e) *Plan Implementation.* Each entity shall begin implementation of its plan on January 26, 1992.

(f) *Submission Locations.* An entity shall submit its plan to one of the following offices, as appropriate:

(1) The individual state administering agency, if it is—

(i) A section 18 recipient;

(ii) A small urbanized area recipient of section 9 funds administered by the State;

(iii) A participant in a coordinated plan, in which all of the participating entities are eligible to submit their plans to the State; or

(2) The UMTA Regional Office (as listed in Appendix B to this part) for all other entities required to submit a paratransit plan. This includes an UMTA recipient under section 9 of the UMT Act; entities submitting a joint plan (unless they meet the requirements of paragraph (f)(1)(iii) of this section), and a public entity not an UMT Act recipient.

§ 37.137 Paratransit plan development.

(a) *Survey of existing services.* Each submitting entity shall survey the area to be covered by the plan to identify any person or entity (public or private) which provides a paratransit or other special transportation service for ADA paratransit eligible individuals in the service area to which the plan applies.

(b) *Public participation.* Each submitting entity shall ensure public participation in the development of its paratransit plan, including at least the following:

(1) *Outreach.* Each submitting entity shall solicit participation in the development of its plan by the widest range of persons anticipated to use its paratransit service. Each entity shall develop contacts, mailing lists and other appropriate means for notification of opportunities to participate in the development of the paratransit plan;

(2) *Consultation with individuals with disabilities.* Each entity shall contact individuals with disabilities and groups representing them in the community. Consultation shall begin at an early stage in the plan development and should involve persons with disabilities in all phases of plan development. All documents and other information concerning the planning procedure and the provision of service shall be available, upon request, to members of the public, except where disclosure would be an unwarranted invasion of personal privacy;

(3) *Opportunity for public comment.* The submitting entity shall make its plan available for review before the plan is finalized. In making the plan available for public review, the entity shall ensure that the plan is available upon request in accessible formats;

(4) *Public hearing.* The entity shall sponsor at a minimum one public hearing and shall provide adequate notice of the hearing, including advertisement in appropriate media, such as newspapers of general and special interest circulation and radio announcements; and

(5) *Special requirements.* If the entity intends to phase-in its paratransit service over a multi-year period, or request a waiver based on undue financial burden, the public hearing shall afford the opportunity for interested citizens to express their views concerning the phase-in, the request, and which service criteria may be delayed in implementation.

(c) *Ongoing requirement.* The entity shall create an ongoing mechanism for the participation of individuals with disabilities in the continued development and assessment of services to persons with disabilities. This includes, but is not limited to, the development of the initial plan, any request for an undue financial burden waiver, and each annual submission.

§ 37.139 Plan contents.

Each plan shall contain the following information:

(a) Identification of the entity or entities submitting the plan, specifying for each—

(1) Name and address; and

(2) Contact person for the plan, with telephone number and facsimile telephone number (FAX), if applicable.

(b) A description of the fixed route system as of January 26, 1992 (or subsequent year for annual updates), including—

(1) A description of the service area, route structure, days and hours of service, fare structure, and population served. This includes maps and tables, if appropriate;

(2) The total number of vehicles (bus, van, or rail) operated in fixed route service (including contracted service), and percentage of accessible vehicles and percentage of routes accessible to and usable by persons with disabilities, including persons who use wheelchairs;

(3) Any other information about the fixed route service that is relevant to establishing the basis for comparability of fixed route and paratransit service.

(c) A description of existing paratransit services, including:

(1) An inventory of service provided by the public entity submitting the plan;

(2) An inventory of service provided by other agencies or organizations, which may in whole or in part be used to meet the requirement for complementary paratransit service; and

(3) A description of the available paratransit services in paragraphs (c)(2) and (c)(3) of this section as they relate to the service criteria described in § 37.131 of this part of service area, response time, fares, restrictions on trip purpose, hours and days of service, and capacity constraints; and to the requirements of ADA paratransit eligibility.

(d) A description of the plan to provide comparable paratransit, including:

(1) An estimate of demand for comparable paratransit service by ADA eligible individuals and a brief description of the demand estimation methodology used;

(2) An analysis of differences between the paratransit service currently provided and what is required under this part by the entity(ies) submitting the plan and other entities, as described in paragraph (c) of this section;

(3) A brief description of planned modifications to existing paratransit and fixed route service and the new paratransit service planned to comply with the ADA paratransit service criteria;

(4) A description of the planned comparable paratransit service as it relates to each of the service criteria described in § 37.131 of this part—service area, absence of restrictions or priorities based on trip purpose, response time, fares, hours and days of service, and lack of capacity constraints. If the paratransit plan is to be phased in, this paragraph shall be coordinated with the information being provided in paragraphs (d)(5) and (d)(6) of this paragraph;

(5) A timetable for implementing comparable paratransit service, with a specific date indicating when the planned service will be completely operational. In no case may full implementation be completed later than January 26, 1997. The plan shall include milestones for implementing phases of the plan, with progress that can be objectively measured yearly;

(6) A budget for comparable paratransit service, including capital and operating expenditures over five years.

(e) A description of the process used to certify individuals with disabilities as ADA paratransit eligible. At a minimum, this must include—

(1) A description of the application and certification process, including—

(i) The availability of information about the process and application materials inaccessible formats;

(ii) The process for determining eligibility according to the provisions of §§ 37.123–37.125 of this part and notifying individuals of the determination made;

(iii) The entity's system and timetable for processing applications and allowing presumptive eligibility; and

(iv) The documentation given to eligible individuals.

(2) A description of the administrative appeals process for individuals denied eligibility.

(3) A policy for visitors, consistent with § 37.127 of this part.

(f) Description of the public participation process including—

(1) Notice given of opportunity for public comment, the date(s) of completed public hearing(s), availability of the plan in accessible formats, outreach efforts, and consultation with persons with disabilities.

(2) A summary of significant issues raised during the public comment period, along with a response to significant comments and discussion of how the issues were resolved.

(g) Efforts to coordinate service with other entities subject to the complementary paratransit requirements of this part which have overlapping or contiguous service areas or jurisdictions.

(h) The following endorsements or certifications:

(1) A resolution adopted by the board of the entity authorizing the plan, as submitted. If more than one entity is submitting the plan there must be an authorizing resolution from each board. If the entity does not function with a board, a statement shall be submitted by the entity's chief executive;

(2) In urbanized areas, certification by the Metropolitan Planning Organization (MPO) that it has reviewed the plan and that the plan is in conformance with the transportation plan developed under the Urban Mass Transportation/Federal Highway Administration joint planning regulation (49 CFR part 613 and 23 CFR part 450). In a service area which is covered by more than one MPO, each applicable MPO shall certify conformity of the entity's plan. The provisions of this paragraph do not apply to non-UMTA recipients;

(3) A certification that the survey of existing paratransit service was conducted as required in § 37.137(a) of this part;

(4) To the extent service provided by other entities is included in the entity's plan for comparable paratransit service, the entity must certify that:

(i) ADA paratransit eligible individuals have access to the service;

(ii) The service is provided in the manner represented; and

(iii) Efforts will be made to coordinate the provision of paratransit service by other providers.

(i) A request for a waiver based on undue financial burden, if applicable. The waiver request should include information sufficient for UMTA to consider the factors in § 37.155 of this part. If a request for an undue financial burden waiver is made, the plan must include a description of additional paratransit services that would be provided to achieve full compliance with the requirement for comparable paratransit in the event the waiver is not granted, and the timetable for the implementation of these additional services.

(j) *Annual plan updates.* (1) The annual plan updates submitted January 26, 1993, and annually thereafter, shall include information necessary to update the information requirements of this section. Information submitted annually must include all significant changes and revisions to the timetable for implementation;

(2) If the paratransit service is being phased in over more than one year, the entity must demonstrate that the milestones identified in the current paratransit plans have been achieved. If the milestones have not been achieved, the plan must explain any slippage and what actions are being taken to compensate for the slippage.

(3) The annual plan must describe specifically the means used to comply with the public participation requirements, as described in § 37.137 of this part.

§ 37.141 Requirements for a joint paratransit plan.

(a) Two or more entities with overlapping or contiguous service areas or jurisdictions may develop and submit a joint plan providing for coordinated paratransit service. Joint plans shall identify the participating entities and indicate their commitment to participate in the plan.

(b) To the maximum extent feasible, all elements of the coordinated plan shall be submitted on January 26, 1992. If a coordinated plan is not completed by January 26, 1992, those entities intending to coordinate paratransit service must submit a general statement declaring their intention to provide coordinated service and each element of the plan specified in § 37.139 to the extent practicable. In addition, the plan must include the following certifications from each entity involved in the coordination effort:

(1) A certification that the entity is committed to providing ADA paratransit service as part of a coordinated plan.

(2) A certification from each public entity participating in the plan that it will maintain current levels of paratransit service until the coordinated plan goes into effect.

(c) Entities submitting the above certifications and plan elements in lieu of a completed plan on January 26, 1992, must submit a complete plan by July 26, 1992.

(d) Filing of an individual plan does not preclude an entity from cooperating with other entities in the development or implementation of a joint plan. An entity wishing to join with other entities after its initial submission may do so by meeting the filing requirements of this section.

§ 37.143 Paratransit plan implementation.

(a) Each entity shall begin implementation of its complementary paratransit plan, pending notice from UMTA. The implementation of the plan shall be consistent with the terms of the plan, including any specified phase-in period.

(b) If the plan contains a request for a wavier based on undue financial burden, the entity shall begin implementation of its plan, pending a determination on its waiver request.

§ 37.145 State comment on plans.

Each state required to receive plans under § 37.135 of this part shall:

(a) Ensure that all applicable section 18 and section 9 recipients have submitted plans.

(b) Certify to UMTA that all plans have been received.

(c) Forward the required certification with comments on each plan to UMTA. The plans, with comments, shall be submitted to UMTA no later than April 1, 1992, for the first year and April 1 annually thereafter.

(d) The State shall develop comments to on each plan, responding to the following points:

(1) Was the plan filed on time?

(2) Does the plan appear reasonable?

(3) Are there circumstances that bear on the ability of the grantee to carry out the plan as represented? If yes, please elaborate.

(4) Is the plan consistent with statewide planning activities?

(5) Are the necessary anticipated financial and capital resources identified in the plan accurately estimated?

§ 37.147 Considerations during UMTA review.

In reviewing each plan, at a minimum UMTA will consider the following:

(a) Whether the plan was filed on time;

(b) Comments submitted by the state, if applicable;

(c) Whether the plan contains responsive elements for each component required under § 37.139 of this part;

(d) Whether the plan, when viewed in its entirety, provides for paratransit service comparable to the entity's fixed route service;

(e) Whether the entity complied with the public participation efforts required by this part; and

(f) The extent to which efforts were made to coordinate with other public entities with overlapping or contiguous service areas or jurisdictions.

§ 37.149 Disapproved plans.

(a) If a plan is disapproved in whole or in part, UMTA will specify which provisions are disapproved. Each entity shall amend its plan consistent with this information and resubmit the plan to the appropriate UMTA Regional Office within 90 days of receipt of the disapproval letter.

(b) Each entity revising its plan shall continue to comply with the public participation requirements applicable to the initial development of the plan (set out in § 37.137 of this part).

§ 37.151 Waiver for undue financial burden.

If compliance with the service criteria of § 37.131 of this part creates an undue financial burden, an entity may request a waiver from all or some of the provisions if the entity has complied with the public participation requirements in § 37.137 of this Part and if the following conditions apply:

(a) At the time of submission of the initial plan on January 26, 1992—

(1) The entity determines that it cannot meet all of the service criteria by January 26, 1997; or

(2) The entity determines that it cannot make measured progress toward compliance in any year before full compliance is required. For purposes of this part, measured progress means implementing milestones as scheduled, such as incorporating an additional paratransit service criterion or improving an aspect of a specific service criterion.

(b) At the time of its annual plan update submission, if the entity believes that circumstances have changed since its last submission, and it is no longer able to comply by January 26, 1997, or make measured progress in any year before 1997, as described in paragraph (a)(2) of this section.

§ 37.153 UMTA waiver determination.

(a) The Administrator will determine whether to grant a waiver for undue financial burden on a case-by-case basis, after considering the factors identified in § 37.155 of this part and the information accompanying the request. If necessary, the Administrator will return the application with a request for additional information.

(b) Any waiver granted will be for a limited and specified period of time.

(c) If the Administrator grants the applicant a waiver, the Administrator will do one of the following:

(1) Require the public entity to provide complementary paratransit to the extent if can do so without incurring an undue financial burden. The entity shall make changes in its plan that the Administrator determines are appropriate to maximize the complementary paratransit service that is provided to ADA paratransit eligible individuals. When making changes to its plan, the entity shall use the public participation process specified for plan development and shall consider first a reduction in number of trips provided to each ADA paratransit eligible person per month, while attempting to meet all other service criteria.

(2) Require the public entity to provide basic complementary paratransit services to all ADA paratransit eligible individuals, even if doing so would cause the public entity to incur an undue financial burden. Basic complementary paratransit service in corridors defined as provided in § 37.131(a) along the public entity's key routes during core service hours.

(i) For purposes of this section, key routes are defined as routes along which there is service at least hourly throughout the day.

(ii) For purposes of this section, core service hours encompass at least peak periods, as these periods are defined locally for fixed route service, consistent with industry practice.

(3) If the Administrator determines that the public entity will incur an undue financial burden as the result of providing basic complementary paratransit service, such that it is infeasible for the entity to provide basic complementary paratransit service, the Administrator shall require the public entity to coordinate with other available providers of demand responsive service in the area served by the public entity to maximize the service to ADA paratransit eligible individuals to the maximum extent feasible.

§ 37.155 Factors in decision to grant an undue financial burden waiver.

(a) In making an undue financial burden determination, the UMTA Administrator will consider the following factors:

(1) Effects on current fixed route service, including reallocation of accessible fixed route vehicles and potential reduction in service, measured by service miles;

(2) Average number of trips made by the entity's general population, on a per capita basis, compared with the average number of trips to be made by registered ADA paratransit eligible persons, on a per capita basis;

(3) Reductions in other services, including other special services;

(4) Increases in fares;

(5) Resources available to implement complementary paratransit service over the period covered by the plan;

(6) Percentage of budget needed to implement the plan, both as a percentage of operating budget and a percentage of entire budget;

(7) The current level of accessible service, both fixed route and paratransit;

(8) Cooperation/coordination among area transportation providers;

(9) Evidence of increased efficiencies, that have been or could be effectuated, that would benefit the level and quality of available resources for complementary paratransit service; and

(10) Unique circumstances in the submitting entity's area that affect the ability of the entity to provide paratransit, that militate against the need to provide paratransit, or in some other respect create a circumstance considered exceptional by the submitting entity.

(b)(1) Costs attributable to complementary paratransit shall be limited to costs of providing service specifically required by this part to ADA paratransit eligible individuals, by entities responsible under this part for providing such service.

(2) If the entity determines that it is impracticable to distinguish between trips mandated by the ADA and other trips on a trip-by-trip basis, the entity shall attribute to ADA complementary paratransit requirements a percentage of its overall paratransit costs. This percentage shall be determined by a statistically valid methodology that determines the percentage of trips that are required by this part. The entity shall submit information concerning its methodology and the data on which its percentage is based with its request for a waiver. Only costs attributable to ADA-mandated trips may be considered with respect to a request for an undue financial burden waiver.

(3) Funds to which the entity would be legally entitled, but which, as a matter of state or local funding arrangements, are provided to another entity and used by that entity to provide paratransit service which is part of a coordinated system of paratransit meeting the requirements of this part, may be

counted in determining the burden associated with the waiver request.

§§ 37.157-37.159 [Reserved]

Subpart G—Provision of Service

§ 37.161 Maintenance of accessible features: General.

(a) Public and private entities providing transportation services shall maintain in operative condition those features of facilities and vehicles that are required to make the vehicles and facilities readily accessible to and usable by individuals with disabilities. These features include, but are not limited to, lifts and other means of access to vehicles, securement devices, elevators, signage and systems to facilitate communications with persons with impaired vision or hearing.

(b) Accessibility features shall be repaired promptly if they are damaged or out of order. When an accessibility feature is out of order, the entity shall take reasonable steps to accommodate individuals with disabilities who would otherwise use the feature.

(c) This section does not prohibit isolated or temporary interruptions in service or access due to maintenance or repairs.

§ 37.163 Keeping vehicle lifts in operative condition: Public entities.

(a) This section applies only to public entities with respect to lifts in non-rail vehicles.

(b) The entity shall establish a system of regular and frequent maintenance checks of lifts sufficient to determine if they are operative.

(c) The entity shall ensure that vehicle operators report to the entity, by the most immediate means available, any failure of a lift to operate in service.

(d) Except as provided in paragraph (e) of this section, when a lift is discovered to be inoperative, the entity shall take the vehicle out of service before the beginning of the vehicle's next service day and ensure that the lift is repaired before the vehicle returns to service.

(e) If there is no spare vehicle available to take the place of a vehicle with an inoperable lift, such that taking the vehicle out of service will reduce the transportation service the entity is able to provide, the public entity may keep the vehicle in service with an inoperable lift for no more than five days (if the entity serves an area of 50,000 or less population) or three days (if the entity serves an area of over 50,000 population) from the day on which the lift is discovered to be inoperative.

(f) In any case in which a vehicle is operating on a fixed route with an inoperative lift, and the headway to the next accessible vehicle on the route exceeds 30 minutes, the entity shall promptly provide alternative transportation to individuals with disabilities who are unable to use the vehicle because its lift does not work.

§ 37.165 Lift and securement use.

(a) This section applies to public and private entities.

(b) All common wheelchairs and their users shall be transported in the entity's vehicles or other conveyances. The entity is not required to permit wheelchairs to ride in places other than designated securement locations in the vehicle, where such locations exist.

(c) (1) For vehicles complying with part 38 of this title, the entity shall use the securement system to secure wheelchairs as provided in that Part.

(2) For other vehicles transporting individuals who use wheelchairs, the entity shall provide and use a securement system to ensure that the wheelchair remains within the securement area.

(3) The entity may require that an individual permit his or her wheelchair to be secured.

(d) The entity may not deny transportation to a wheelchair or its user on the ground that the device cannot be secured or restrained satisfactorily by the vehicle's securement system.

(e) The entity may recommend to a user of a wheelchair that the individual transfer to a vehicle seat. The entity may not require the individual to transfer.

(f) Where necessary or upon request, the entity's personnel shall assist individuals with disabilities with the use of securement systems, ramps and lifts. If it is necessary for the personnel to leave their seats to provide this assistance, they shall do so.

(g) The entity shall permit individuals with disabilities who do not use wheelchairs, including standees, to use a vehicle's lift or ramp to enter the vehicle.

§ 37.167 Other service requirements.

(a) This section applies to public and private entities.

(b) On fixed route systems, the entity shall announce stops as follows:

(1) The entity shall announce at least at transfer points with other fixed routes, other major intersections and destination points, and intervals along a route sufficient to permit individuals with visual impairments or other disabilities to be oriented to their location.

(2) The entity shall announce any stop on request of an individual with a disability.

(c) Where vehicles or other conveyances for more than one route serve the same stop, the entity shall provide a means by which an individual with a visual impairment or other disability can identify the proper vehicle to enter or be identified to the vehicle operator as a person seeking a ride on a particular route.

(d) The entity shall permit service animals to accompany individuals with disabilities in vehicles and facilities.

(e) The entity shall ensure that vehicle operators and other personnel make use of accessibility-related equipment or features required by part 38 of this title.

(f) The entity shall make available to individuals with disabilities adequate information concerning transportation services. This obligation includes making adequate communications capacity available, through accessible formats and technology, to enable users to obtain information and schedule service.

(g) The entity shall not refuse to permit a passenger who uses a lift to disembark from a vehicle at any designated stop, unless the lift cannot be deployed, the lift will be damaged if it is deployed, or temporary conditions at the stop, not under the control of the entity, preclude the safe use of the stop by all passengers.

(h) The entity shall not prohibit an individual with a disability from traveling with a respirator or portable oxygen supply, consistent with applicable Department of Transportation rules on the transportation of hazardous materials (49 CFR subtitle B, chapter 1, subchapter C).

(i) The entity shall ensure that adequate time is provided to allow individuals with disabilities to complete boarding or disembarking from the vehicle.

§ 37.169 Interim requirements for over-the-road bus service operated by private entities.

(a) Private entities operating over-the-road buses, in addition to compliance with other applicable provisions of this part, shall provide accessible service as provided in this section.

(b) The private entity shall provide assistance, as needed, to individuals with disabilities in boarding and disembarking, including moving to and from the bus seat for the purpose of boarding and disembarking. The private entity shall ensure that personnel are

trained to provide this assistance safely and appropriately.

(c) To the extent that they can be accommodated in the areas of the passenger compartment provided for passengers' personal effects, wheelchairs or other mobility aids and assistive devices used by individuals with disabilities, or components of such devices, shall be permitted in the passenger compartment. When the bus is at rest at a stop, the driver or other personnel shall assist individuals with disabilities with the stowage and retrieval of mobility aids, assistive devices, or other items that can be accommodated in the passenger compartment of the bus.

(d) Wheelchairs and other mobility aids or assistive devices that cannot be accommodated in the passenger compartment (including electric wheelchairs) shall be accommodated in the baggage compartment of the bus, unless the size of the baggage compartment prevents such accommodation.

(e) At any given stop, individuals with disabilities shall have the opportunity to have their wheelchairs or other mobility aids or assistive devices stowed in the baggage compartment before other baggage or cargo is loaded, but baggage or cargo already on the bus does not have to be off-loaded in order to make room for such devices.

(f) The entity may require up to 48 hours' advance notice only for providing boarding assistance. If the individual does not provide such notice, the entity shall nonetheless provide the service if it can do so by making a reasonable effort, without delaying the bus service.

§ 37.171 Equivalency requirement for demand responsive service operated by private entities not primarily engaged in the business of transporting people.

A private entity not primarily engaged in the business of transporting people which operates a demand responsive system shall ensure that its system, when viewed in its entirety, provides equivalent service to individuals with disabilities, including individuals who use wheelchairs, as it does to individuals without disabilities. The standards of § 37.105 shall be used to determine if the entity is providing equivalent service.

§ 37.173 Training requirements.

Each public or private entity which operates a fixed route or demand responsive system shall ensure that personnel are trained to proficiency, as appropriate to their duties, so that they operate vehicles and equipment safely and properly assist and treat individuals with disabilities who use the service in a respectful and courteous way, with appropriate attention to the difference among individuals with disabilities.

BILLING CODE 4910—62—M

Appendix A to Part 37—Standards for Accessible Transportation Facilities

ADA ACCESSIBILITY GUIDELINES FOR BUILDINGS AND FACILITIES TABLE OF CONTENTS

1. PURPOSE **1**

2. GENERAL **1**

2.1 Provisions for Adults 1
2.2 Equivalent Facilitation 1

3. MISCELLANEOUS INSTRUCTIONS AND DEFINITIONS **1**

3.1 Graphic Conventions 1
3.2 Dimensional Tolerances 2
3.3 Notes 2
3.4 General Terminology 2
3.5 Definitions 2

4. ACCESSIBLE ELEMENTS AND SPACES: SCOPE AND TECHNICAL REQUIREMENTS **5**

4.1 Minimum Requirements 5

4.1.1. Application 5
4.1.2. Accessible Sites and Exterior Facilities: New Construction 5
4.1.3. Accessible Buildings: New Construction 7
4.1.4. (Reserved) 10
4.1.5. Accessible Buildings: Additions 10
4.1.6. Accessible Buildings: Alterations 11
4.1.7. Accessible Buildings: Historic Preservation 13

4.2 Space Allowance and Reach Ranges 14
4.3 Accessible Route 15
4.4 Protruding Objects 21
4.5 Ground and Floor Surfaces 22
4.6 Parking and Passenger Loading Zones 24
4.7 Curb Ramps 26
4.8 Ramps 27
4.9 Stairs 30
4.10 Elevators 30

4.11 Platform Lifts (Wheelchair Lifts) 36
4.12 Windows 36
4.13 Doors 36
4.14 Entrances 40
4.15 Drinking Fountains and Water Coolers 40
4.16 Water Closets 40
4.17 Toilet Stalls 41
4.18 Urinals 44
4.19 Lavatories and Mirrors 44
4.20 Bathtubs 45
4.21 Shower Stalls 45
4.22 Toilet Rooms 45
4.23 Bathrooms, Bathing Facilities, and Shower Rooms 48
4.24 Sinks 49
4.25 Storage 49
4.26 Handrails, Grab Bars, and Tub and Shower Seats 50
4.27 Controls and Operating Mechanisms 51
4.28 Alarms 52
4.29 Detectable Warnings 53
4.30 Signage 53
4.31 Telephones 54
4.32 Fixed or Built-in Seating and Tables 56
4.33 Assembly Areas 56
4.34 Automated Teller Machines 58
4.35 Dressing and Fitting Rooms 58

5. RESTAURANTS AND CAFETERIAS. 59

6. MEDICAL CARE FACILITIES 60

7. BUSINESS AND MERCANTILE 61

8. LIBRARIES 62

9. ACCESSIBLE TRANSIENT LODGING 63

10. TRANSPORTATION FACILITIES 67

APPENDIX A1

1. PURPOSE.

This document sets guidelines for accessibility to buildings and facilities by individuals with disabilities under the Americans with Disabilities Act (ADA) of 1990. These guidelines are to be applied during the design, construction, and alteration of buildings and facilities covered by Titles II and III of the ADA to the extent required by regulations issued by Federal agencies, including the Department of Justice and the Department of Transportation, under the ADA.

The technical specifications 4.2 through 4.35, of these guidelines are the same as those of the American National Standard Institute's document A117.1-1980, except as noted in this text by italics. However, sections 4.1.1 through 4.1.7 and sections 5 through 10 are different from ANSI A117.1 in their entirety and are printed in standard type.

The illustrations and text of ANSI A117.1 are reproduced with permission from the American National Standards Institute. Copies of the standard may be purchased from the American National Standards Institute at 1430 Broadway, New York, New York 10018.

2. GENERAL.

2.1 Provisions for Adults. *The specifications in these guidelines are based upon adult dimensions and anthropometrics.*

2.2* Equivalent Facilitation. *Departures from particular technical and scoping requirements of this guideline by the use of other designs and technologies are permitted where the alternative designs and technologies used will provide substantially equivalent or greater access to and usability of the facility.*

3. MISCELLANEOUS INSTRUCTIONS AND DEFINITIONS.

3.1 Graphic Conventions. Graphic conventions are shown in Table 1. Dimensions that are not marked minimum or maximum are absolute, unless otherwise indicated in the text or captions.

Table 1
Graphic Conventions

Convention	Description
36 / 915	Typical dimension line showing U.S. customary units (in inches) above the line and SI units (in millimeters) below
9 / 230	Dimensions for short distances indicated on extended line
9 / 230 36 / 915	Dimension line showing alternate dimensions required
	Direction of approach
max	Maximum
min	Minimum
	Boundary of clear floor area
℄	Centerline

3.2 Dimensional Tolerances. All dimensions are subject to conventional building industry tolerances for field conditions.

3.3 Notes. The text of *these guidelines* does not contain notes or footnotes. Additional information, explanations, and advisory materials are located in the Appendix. Paragraphs marked with an asterisk have related, non-mandatory material in the Appendix. In the Appendix, the corresponding paragraph numbers are preceded by an A.

3.4 General Terminology.

comply with. Meet one or more specifications of *these guidelines*.

if, if ... then. Denotes a specification that applies only when the conditions described are present.

may. Denotes an option or alternative.

shall. Denotes a mandatory specification or requirement.

should. Denotes an advisory specification or recommendation.

3.5 Definitions.

Access Aisle. An accessible pedestrian space between elements, such as parking spaces, seating, and desks, that provides clearances appropriate for use of the elements.

Accessible. Describes a site, building, facility, or portion thereof that complies with *these guidelines*.

Accessible Element. An *element* specified by *these guidelines* (for example, telephone, controls, and the like).

Accessible Route. A continuous unobstructed path connecting all accessible elements and spaces of a building or facility. Interior accessible routes may include corridors, floors, ramps, elevators, lifts, and clear floor space at fixtures. Exterior accessible routes may include parking access aisles, curb ramps, *crosswalks at vehicular ways*, walks, ramps, and lifts.

Accessible Space. *Space that complies with these guidelines.*

Adaptability. The ability of certain building spaces and elements, such as kitchen counters, sinks, and grab bars, to be added or altered so as to accommodate the needs of *individuals with or without disabilities* or to accommodate the needs of persons with different types or degrees of disability.

Addition. *An expansion, extension, or increase in the gross floor area of a building or facility.*

Administrative Authority. A governmental agency that adopts or enforces regulations and *guidelines* for the design, construction, or *alteration* of buildings and facilities.

Alteration. *An alteration is a change to a building or facility made by, on behalf of, or for the use of a public accommodation or commercial facility, that affects or could affect the usability of the building or facility or part thereof. Alterations include, but are not limited to, remodeling, renovation, rehabilitation, reconstruction, historic restoration, changes or rearrangement of the structural parts or elements, and changes or rearrangement in the plan configuration of walls and full-height partitions. Normal maintenance, reroofing, painting or wallpapering, or changes to mechanical and electrical systems are not alterations unless they affect the usability of the building or facility.*

Area of Rescue Assistance. *An area, which has direct access to an exit, where people who are unable to use stairs may remain temporarily in safety to await further instructions or assistance during emergency evacuation.*

Assembly Area. A room or space accommodating a *group of* individuals for recreational, educational, political, social, or amusement purposes, or for the consumption of food and drink.

Automatic Door. A door equipped with a power-operated mechanism and controls that open and close the door automatically upon receipt of a momentary actuating signal. The switch that begins the automatic cycle may be a photoelectric device, floor mat, or manual switch (see power-assisted door).

Building. Any structure used and intended for supporting or sheltering any use or occupancy.

Circulation Path. An exterior or interior way of passage from one place to another for pedestrians, including, but not limited to, walks, hallways, courtyards, stairways, and stair landings.

Clear. Unobstructed.

Clear Floor Space. *The minimum unobstructed floor or ground space required to accommodate a single, stationary wheelchair and occupant.*

Closed Circuit Telephone. *A telephone with dedicated line(s) such as a house phone, courtesy phone or phone that must be used to gain entrance to a facility.*

Common Use. Refers to those interior and exterior rooms, spaces, or elements that are made available for the use of a restricted group of people (for example, *occupants of a homeless shelter*, the occupants of an office building, or the guests of such occupants).

Cross Slope. The slope that is perpendicular to the direction of travel (see running slope).

Curb Ramp. A short ramp cutting through a curb or built up to it.

Detectable Warning. *A standardized surface feature built in or applied to walking surfaces or other elements to warn visually impaired people of hazards on a circulation path.*

Dwelling Unit. A single unit which provides a kitchen or food preparation area, in addition to rooms and spaces for living, bathing, sleeping, and the like. *Dwelling units include a single family home or a townhouse used as a transient group home; an apartment building used as a shelter; guestrooms in a hotel that provide sleeping accommodations and food preparation areas; and other similar facilities used on a transient basis. For purposes of these guidelines, use of the term "Dwelling Unit" does not imply the unit is used as a residence.*

Egress, Means of. *A continuous and unobstructed way of exit travel from any point in a building or facility to a public way. A means of egress comprises vertical and horizontal travel and may include intervening room spaces, doorways, hallways, corridors, passageways, balconies, ramps, stairs, enclosures, lobbies, horizontal exits, courts and yards. An accessible means of egress is one that complies with these guidelines and does not include stairs, steps, or escalators. Areas of rescue assistance or evacuation elevators may be included as part of accessible means of egress.*

Element. *An architectural or mechanical component of a building, facility, space, or site, e.g., telephone, curb ramp, door, drinking fountain, seating, or water closet.*

Entrance. *Any access point to a building or portion of a building or facility used for the purpose of entering. An entrance includes the approach walk, the vertical access leading to the entrance platform, the entrance platform itself, vestibules if provided, the entry door(s) or gate(s), and the hardware of the entry door(s) or gate(s).*

Facility. *All or any portion of buildings, structures, site improvements, complexes, equipment, roads, walks, passageways, parking lots, or other real or personal property located on a site.*

Ground Floor. *Any occupiable floor less than one story above or below grade with direct access to grade. A building or facility always has at least one ground floor and may have more than one ground floor as where a split level entrance has been provided or where a building is built into a hillside.*

Mezzanine or Mezzanine Floor. *That portion of a story which is an intermediate floor level placed within the story and having occupiable space above and below its floor.*

Marked Crossing. A crosswalk or other identified path intended for pedestrian use in crossing a vehicular way.

Multifamily Dwelling. Any building containing more than two dwelling units.

Occupiable. *A room or enclosed space designed for human occupancy in which individuals congregate for amusement, educational or similar purposes, or in which occupants are engaged at labor, and which is equipped with means of egress, light, and ventilation.*

3.5 Definitions

Operable Part. A part of a piece of equipment or appliance used to insert or withdraw objects, or to activate, deactivate, or adjust the equipment or appliance (for example, coin slot, pushbutton, handle).

Path of Travel. *(Reserved).*

Power-assisted Door. A door used *for human passage* with a mechanism that helps to open the door, or relieves the opening resistance of a door, upon the activation of a switch or a continued force applied to the door itself.

Public Use. Describes interior or exterior rooms or spaces that are made available to the general public. Public use may be provided at a building or facility that is privately or publicly owned.

Ramp. A walking surface which has a running slope greater than 1:20.

Running Slope. The slope that is parallel to the direction of travel (see cross slope).

Service Entrance. An entrance intended primarily for delivery of goods or services.

Signage. *Displayed* verbal, symbolic, *tactile,* and pictorial information.

Site. A parcel of land bounded by a property line or a designated portion of a public right-of-way.

Site Improvement. Landscaping, paving for pedestrian and vehicular ways, outdoor lighting, recreational facilities, and the like, added to a site.

Sleeping Accommodations. Rooms in which people sleep; for example, dormitory and hotel or motel guest rooms or suites.

Space. *A definable area, e.g., room, toilet room, hall, assembly area, entrance, storage room, alcove, courtyard, or lobby.*

Story. *That portion of a building included between the upper surface of a floor and upper surface of the floor or roof next above. If such portion of a building does not include occupiable space, it is not considered a story for purposes of these guidelines. There may be more than one floor level within a story as in the case of a mezzanine or mezzanines.*

Structural Frame. The structural frame shall be considered to be the columns and the girders, beams, trusses and spandrels having direct connections to the columns and all other members which are essential to the stability of the building as a whole.

Tactile. Describes an object that can be perceived using the sense of touch.

Text Telephone. *Machinery or equipment that employs interactive graphic (i.e., typed) communications through the transmission of coded signals across the standard telephone network. Text telephones can include, for example, devices known as TDD's (telecommunication display devices or telecommunication devices for deaf persons) or computers.*

Transient Lodging. *A building, facility, or portion thereof, excluding inpatient medical care facilities, that contains one or more dwelling units or sleeping accommodations. Transient lodging may include, but is not limited to, resorts, group homes, hotels, motels, and dormitories.*

Vehicular Way. A route intended for vehicular traffic, such as a street, driveway, or parking lot.

Walk. An exterior pathway with a prepared surface intended for pedestrian use, including general pedestrian areas such as plazas and courts.

NOTE: Sections 4.1.1 through 4.1.7 are different from ANSI A117.1 in their entirety and are printed in standard type (ANSI A117.1 does not include scoping provisions).

4. ACCESSIBLE ELEMENTS AND SPACES: SCOPE AND TECHNICAL REQUIREMENTS.

4.1 Minimum Requirements

4.1.1* Application.

(1) General. All areas of newly designed or newly constructed buildings and facilities required to be accessible by 4.1.2 and 4.1.3 and altered portions of existing buildings and facilities required to be accessible by 4.1.6 shall comply with these guidelines, 4.1 through 4.35, unless otherwise provided in this section or as modified in a special application section.

(2) Application Based on Building Use. Special application sections 5 through 10 provide additional requirements for restaurants and cafeterias, medical care facilities, business and mercantile, libraries, accessible transient lodging, and transportation facilities. When a building or facility contains more than one use covered by a special application section, each portion shall comply with the requirements for that use.

(3)* Areas Used Only by Employees as Work Areas. Areas that are used only as work areas shall be designed and constructed so that individuals with disabilities can approach, enter, and exit the areas. These guidelines do not require that any areas used only as work areas be constructed to permit maneuvering within the work area or be constructed or equipped (i.e., with racks or shelves) to be accessible.

(4) Temporary Structures. These guidelines cover temporary buildings or facilities as well as permanent facilities. Temporary buildings and facilities are not of permanent construction but are extensively used or are essential for public use for a period of time. Examples of temporary buildings or facilities covered by these guidelines include, but are not limited to: reviewing stands, temporary classrooms, bleacher areas, exhibit areas, temporary banking facilities, temporary health screening services, or temporary safe pedestrian passageways around a construction site. Structures, sites and equipment directly associated with the actual processes of construction, such as scaffolding, bridging, materials hoists, or construction trailers are not included.

(5) General Exceptions.

(a) In new construction, a person or entity is not required to meet fully the requirements of these guidelines where that person or entity can demonstrate that it is structurally impracticable to do so. Full compliance will be considered structurally impracticable only in those rare circumstances when the unique characteristics of terrain prevent the incorporation of accessibility features. If full compliance with the requirements of these guidelines is structurally impracticable, a person or entity shall comply with the requirements to the extent it is not structurally impracticable. Any portion of the building or facility which can be made accessible shall comply to the extent that it is not structurally impracticable.

(b) Accessibility is not required to (i) observation galleries used primarily for security purposes; or (ii) in non-occupiable spaces accessed only by ladders, catwalks, crawl spaces, very narrow passageways, or freight (non-passenger) elevators, and frequented only by service personnel for repair purposes; such spaces include, but are not limited to, elevator pits, elevator penthouses, piping or equipment catwalks.

4.1.2 Accessible Sites and Exterior Facilities: New Construction. An accessible site shall meet the following minimum requirements:

(1) At least one accessible route complying with 4.3 shall be provided within the boundary of the site from public transportation stops, accessible parking spaces, passenger loading zones if provided, and public streets or sidewalks, to an accessible building entrance.

(2) At least one accessible route complying with 4.3 shall connect accessible buildings, accessible facilities, accessible elements, and accessible spaces that are on the same site.

(3) All objects that protrude from surfaces or posts into circulation paths shall comply with 4.4.

4.1.2 Accessible Sites and Exterior Facilities: New Construction

(4) Ground surfaces along accessible routes and in accessible spaces shall comply with 4.5.

(5) (a) If parking spaces are provided for self-parking by employees or visitors, or both, then accessible spaces complying with 4.6 shall be provided in each such parking area in conformance with the table below. Spaces required by the table need not be provided in the particular lot. They may be provided in a different location if equivalent or greater accessibility, in terms of distance from an accessible entrance, cost and convenience is ensured.

Total Parking in Lot	Required Minimum Number of Accessible Spaces
1 to 25	1
26 to 50	2
51 to 75	3
76 to 100	4
101 to 150	5
151 to 200	6
201 to 300	7
301 to 400	8
401 to 500	9
501 to 1000	2 percent of total
1001 and over	20 plus 1 for each 100 over 1000

Except as provided in (b), access aisles adjacent to accessible spaces shall be 60 in (1525 mm) wide minimum.

(b) One in every eight accessible spaces, but not less than one, shall be served by an access aisle 96 in (2440 mm) wide minimum and shall be designated "van accessible" as required by 4.6.4. The vertical clearance at such spaces shall comply with 4.6.5. All such spaces may be grouped on one level of a parking structure.

EXCEPTION: Provision of all required parking spaces in conformance with "Universal Parking Design" (see appendix A4.6.3) is permitted.

(c) If passenger loading zones are provided, then at least one passenger loading zone shall comply with 4.6.6.

(d) At facilities providing medical care and other services for persons with mobility impairments, parking spaces complying with 4.6 shall be provided in accordance with 4.1.2(5)(a) except as follows:

(i) Outpatient units and facilities: 10 percent of the total number of parking spaces provided serving each such outpatient unit or facility;

(ii) Units and facilities that specialize in treatment or services for persons with mobility impairments: 20 percent of the total number of parking spaces provided serving each such unit or facility.

(e)*Valet parking: Valet parking facilities shall provide a passenger loading zone complying with 4.6.6 located on an accessible route to the entrance of the facility. Paragraphs 5(a), 5(b), and 5(d) of this section do not apply to valet parking facilities.

(6) If toilet facilities are provided on a site, then each such public or common use toilet facility shall comply with 4.22. If bathing facilities are provided on a site, then each such public or common use bathing facility shall comply with 4.23.

For single user portable toilet or bathing units clustered at a single location, at least 5% but no less than one toilet unit or bathing unit complying with 4.22 or 4.23 shall be installed at each cluster whenever typical inaccessible units are provided. Accessible units shall be identified by the International Symbol of Accessibility.

EXCEPTION: Portable toilet units at construction sites used exclusively by construction personnel are not required to comply with 4.1.2(6).

(7) Building Signage. Signs which designate permanent rooms and spaces shall comply with 4.30.1, 4.30.4, 4.30.5 and 4.30.6. Other signs which provide direction to, or information about, functional spaces of the building shall comply with 4.30.1, 4.30.2, 4.30.3, and 4.30.5. Elements and spaces of accessible facilities which shall be identified by the International Symbol of Accessibility and which shall comply with 4.30.7 are:

(a) Parking spaces designated as reserved for individuals with disabilities;

(b) Accessible passenger loading zones;

(c) Accessible entrances when not all are accessible (inaccessible entrances shall have directional signage to indicate the route to the nearest accessible entrance);

(d) Accessible toilet and bathing facilities when not all are accessible.

4.1.3 Accessible Buildings: New Construction. Accessible buildings and facilities shall meet the following minimum requirements:

(1) At least one accessible route complying with 4.3 shall connect accessible building or facility entrances with all accessible spaces and elements within the building or facility.

(2) All objects that overhang or protrude into circulation paths shall comply with 4.4.

(3) Ground and floor surfaces along accessible routes and in accessible rooms and spaces shall comply with 4.5.

(4) Interior and exterior stairs connecting levels that are not connected by an elevator, ramp, or other accessible means of vertical access shall comply with 4.9.

(5)* One passenger elevator complying with 4.10 shall serve each level, including mezzanines, in all multi-story buildings and facilities unless exempted below. If more than one elevator is provided, each full passenger elevator shall comply with 4.10.

EXCEPTION 1: Elevators are not required in facilities that are less than three stories or that have less than 3000 square feet per story unless the building is a shopping center, a shopping mall, or the professional office of a health care provider, or another type of facility as determined by the Attorney General. The elevator exemption set forth in this paragraph does not obviate or limit in any way the obligation to comply with the other accessibility requirements established in section 4.1.3. For example, floors above or below the accessible ground floor must meet the requirements of this section except for elevator service. If toilet or bathing facilities are provided on a level not served by an elevator, then toilet or bathing facilities must be provided on the accessible ground floor. In new construction if a building or facility is eligible for this exemption but a full passenger elevator is nonetheless planned, that elevator shall meet the requirements of 4.10 and shall serve each level in the building. A full passenger elevator that provides service from a garage to only one level of a building or facility is not required to serve other levels.

EXCEPTION 2: Elevator pits, elevator penthouses, mechanical rooms, piping or equipment catwalks are exempted from this requirement.

EXCEPTION 3: Accessible ramps complying with 4.8 may be used in lieu of an elevator.

EXCEPTION 4: Platform lifts (wheelchair lifts) complying with 4.11 of this guideline and applicable state or local codes may be used in lieu of an elevator only under the following conditions:

(a) To provide an accessible route to a performing area in an assembly occupancy.

(b) To comply with the wheelchair viewing position line-of-sight and dispersion requirements of 4.33.3.

(c) To provide access to incidental occupiable spaces and rooms which are not open to the general public and which house no more than five persons, including but not limited to equipment control rooms and projection booths.

(d) To provide access where existing site constraints or other constraints make use of a ramp or an elevator infeasible.

(6) Windows: (Reserved).

(7) Doors:

(a) At each accessible entrance to a building or facility, at least one door shall comply with 4.13.

(b) Within a building or facility, at least one door at each accessible space shall comply with 4.13.

(c) Each door that is an element of an accessible route shall comply with 4.13.

4.1.3 Accessible Buildings: New Construction

(d) Each door required by 4.3.10, Egress, shall comply with 4.13.

(8) In new construction, at a minimum, the requirements in (a) and (b) below shall be satisfied independently:

(a)(i) At least 50% of all public entrances (excluding those in (b) below) must be accessible. At least one must be a ground floor entrance. Public entrances are any entrances that are not loading or service entrances.

(ii) Accessible entrances must be provided in a number at least equivalent to the number of exits required by the applicable building/fire codes. (This paragraph does not require an increase in the total number of entrances planned for a facility.)

(iii) An accessible entrance must be provided to each tenancy in a facility (for example, individual stores in a strip shopping center).

One entrance may be considered as meeting more than one of the requirements in (a). Where feasible, accessible entrances shall be the entrances used by the majority of people visiting or working in the building.

(b)(i) In addition, if direct access is provided for pedestrians from an enclosed parking garage to the building, at least one direct entrance from the garage to the building must be accessible.

(ii) If access is provided for pedestrians from a pedestrian tunnel or elevated walkway, one entrance to the building from each tunnel or walkway must be accessible.

One entrance may be considered as meeting more than one of the requirements in (b).

Because entrances also serve as emergency exits whose proximity to all parts of buildings and facilities is essential, it is preferable that all entrances be accessible.

(c) If the only entrance to a building, or tenancy in a facility, is a service entrance, that entrance shall be accessible.

(d) Entrances which are not accessible shall have directional signage complying with 4.30.1, 4.30.2, 4.30.3, and 4.30.5, which indicates the location of the nearest accessible entrance.

(9)* In buildings or facilities, or portions of buildings or facilities, required to be accessible, accessible means of egress shall be provided in the same number as required for exits by local building/life safety regulations. Where a required exit from an occupiable level above or below a level of accessible exit discharge is not accessible, an area of rescue assistance shall be provided on each such level (in a number equal to that of inaccessible required exits). Areas of rescue assistance shall comply with 4.3.11. A horizontal exit, meeting the requirements of local building/life safety regulations, shall satisfy the requirement for an area of rescue assistance.

EXCEPTION: Areas of rescue assistance are not required in buildings or facilities having a supervised automatic sprinkler system.

(10)* Drinking Fountains:

(a) Where only one drinking fountain is provided on a floor there shall be a drinking fountain which is accessible to individuals who use wheelchairs in accordance with 4.15 and one accessible to those who have difficulty bending or stooping. (This can be accommodated by the use of a "hi-lo" fountain; by providing one fountain accessible to those who use wheelchairs and one fountain at a standard height convenient for those who have difficulty bending; by providing a fountain accessible under 4.15 and a water cooler; or by such other means as would achieve the required accessibility for each group on each floor.)

(b) Where more than one drinking fountain or water cooler is provided on a floor, 50% of those provided shall comply with 4.15 and shall be on an accessible route.

(11) Toilet Facilities: If toilet rooms are provided, then each public and common use toilet room shall comply with 4.22. Other toilet rooms provided for the use of occupants of specific spaces (i.e., a private toilet room for the occupant of a private office) shall be adaptable. If bathing rooms are provided, then each public and common use bathroom shall comply with 4.23. Accessible toilet rooms and bathing facilities shall be on an accessible route.

(12) Storage, Shelving and Display Units:

(a) If fixed or built-in storage facilities such as cabinets, shelves, closets, and drawers are provided in accessible spaces, at least one of each type provided shall contain storage space complying with 4.25. Additional storage may be provided outside of the dimensions required by 4.25.

(b) Shelves or display units allowing self-service by customers in mercantile occupancies shall be located on an accessible route complying with 4.3. Requirements for accessible reach range do not apply.

(13) Controls and operating mechanisms in accessible spaces, along accessible routes, or as parts of accessible elements (for example, light switches and dispenser controls) shall comply with 4.27.

(14) If emergency warning systems are provided, then they shall include both audible alarms and visual alarms complying with 4.28. Sleeping accommodations required to comply with 9.3 shall have an alarm system complying with 4.28. Emergency warning systems in medical care facilities may be modified to suit standard health care alarm design practice.

(15) Detectable warnings shall be provided at locations as specified in 4.29.

(16) Building Signage:

(a) Signs which designate permanent rooms and spaces shall comply with 4.30.1, 4.30.4, 4.30.5 and 4.30.6.

(b) Other signs which provide direction to or information about functional spaces of the building shall comply with 4.30.1, 4.30.2, 4.30.3, and 4.30.5.

EXCEPTION: Building directories, menus, and all other signs which are temporary are not required to comply.

(17) Public Telephones:

(a) If public pay telephones, public closed circuit telephones, or other public telephones are provided, then they shall comply with 4.31.2 through 4.31.8 to the extent required by the following table:

Number of each type of telephone provided on each floor	Number of telephones required to comply with 4.31.2 through 4.31.8[1]
1 or more single unit	1 per floor
1 bank[2]	1 per floor
2 or more banks[2]	1 per bank. Accessible unit may be installed as a single unit in proximity (either visible or with signage) to the bank. At least one public telephone per floor shall meet the requirements for a forward reach telephone[3].

[1] Additional public telephones may be installed at any height. Unless otherwise specified, accessible telephones may be either forward or side reach telephones.

[2] A bank consists of two or more adjacent public telephones, often installed as a unit.

[3] EXCEPTION: For exterior installations only, if dial tone first service is available, then a side reach telephone may be installed instead of the required forward reach telephone (i.e., one telephone in proximity to each bank shall comply with 4.31).

(b)* All telephones required to be accessible and complying with 4.31.2 through 4.31.8 shall be equipped with a volume control. In addition, 25 percent, but never less than one, of all other public telephones provided shall be equipped with a volume control and shall be dispersed among all types of public telephones, including closed circuit telephones, throughout the building or facility. Signage complying with applicable provisions of 4.30.7 shall be provided.

(c) The following shall be provided in accordance with 4.31.9:

(i) if a total number of four or more public pay telephones (including both interior and exterior phones) is provided at a site, and at least one is in an interior location, then at least one interior public text telephone shall be provided.

(ii) if an interior public pay telephone is provided in a stadium or arena, in a convention center, in a hotel with a convention center, or

4.1.3 Accessible Buildings: New Construction

in a covered mall, at least one interior public text telephone shall be provided in the facility.

(iii) if a public pay telephone is located in or adjacent to a hospital emergency room, hospital recovery room, or hospital waiting room, one public text telephone shall be provided at each such location.

(d) Where a bank of telephones in the interior of a building consists of three or more public pay telephones, at least one public pay telephone in each such bank shall be equipped with a shelf and outlet in compliance with 4.31.9(2).

(18) If fixed or built-in seating or tables (including, but not limited to, study carrels and student laboratory stations), are provided in accessible public or common use areas, at least five percent (5%), but not less than one, of the fixed or built-in seating areas or tables shall comply with 4.32. An accessible route shall lead to and through such fixed or built-in seating areas, or tables.

(19)* Assembly areas:

(a) In places of assembly with fixed seating accessible wheelchair locations shall comply with 4.33.2, 4.33.3, and 4.33.4 and shall be provided consistent with the following table:

Capacity of Seating in Assembly Areas	Number of Required Wheelchair Locations
4 to 25	1
26 to 50	2
51 to 300	4
301 to 500	6
over 500	6, plus 1 additional space for each total seating capacity increase of 100

In addition, one percent, but not less than one, of all fixed seats shall be aisle seats with no armrests on the aisle side, or removable or folding armrests on the aisle side. Each such seat shall be identified by a sign or marker. Signage notifying patrons of the availability of such seats shall be posted at the ticket office. Aisle seats are not required to comply with 4.33.4.

(b) This paragraph applies to assembly areas where audible communications are integral to the use of the space (e.g., concert and lecture halls, playhouses and movie theaters, meeting rooms, etc.). Such assembly areas, if (1) they accommodate at least 50 persons, or if they have audio-amplification systems, and (2) they have fixed seating, shall have a permanently installed assistive listening system complying with 4.33. For other assembly areas, a permanently installed assistive listening system, or an adequate number of electrical outlets or other supplementary wiring necessary to support a portable assistive listening system shall be provided. The minimum number of receivers to be provided shall be equal to 4 percent of the total number of seats, but in no case less than two. Signage complying with applicable provisions of 4.30 shall be installed to notify patrons of the availability of a listening system.

(20) Where automated teller machines (ATMs) are provided, each ATM shall comply with the requirements of 4.34 except where two or more are provided at a location, then only one must comply.

EXCEPTION: Drive-up-only automated teller machines are not required to comply with 4.27.2, 4.27.3 and 4.34.3.

(21) Where dressing and fitting rooms are provided for use by the general public, patients, customers or employees, 5 percent, but never less than one, of dressing rooms for each type of use in each cluster of dressing rooms shall be accessible and shall comply with 4.35.

Examples of types of dressing rooms are those serving different genders or distinct and different functions as in different treatment or examination facilities.

4.1.4 (Reserved).

4.1.5 Accessible Buildings: Additions. Each addition to an existing building or facility shall be regarded as an alteration. Each space or element added to the existing building or facility shall comply with the applicable provisions of 4.1.1 to 4.1.3, Minimum Requirements (for New Construction) and the applicable technical specifications of 4.2 through 4.35 and sections 5 through 10. Each addition that

affects or could affect the usability of an area containing a primary function shall comply with 4.1.6(2).

4.1.6 Accessible Buildings: Alterations.

(1) General. Alterations to existing buildings and facilities shall comply with the following:

(a) No alteration shall be undertaken which decreases or has the effect of decreasing accessibility or usability of a building or facility below the requirements for new construction at the time of alteration.

(b) If existing elements, spaces, or common areas are altered, then each such altered element, space, feature, or area shall comply with the applicable provisions of 4.1.1 to 4.1.3 Minimum Requirements (for New Construction). If the applicable provision for new construction requires that an element, space, or common area be on an accessible route, the altered element, space, or common area is not required to be on an accessible route except as provided in 4.1.6(2) (Alterations to an Area Containing a Primary Function.)

(c) If alterations of single elements, when considered together, amount to an alteration of a room or space in a building or facility, the entire space shall be made accessible.

(d) No alteration of an existing element, space, or area of a building or facility shall impose a requirement for greater accessibility than that which would be required for new construction. For example, if the elevators and stairs in a building are being altered and the elevators are, in turn, being made accessible, then no accessibility modifications are required to the stairs connecting levels connected by the elevator. If stair modifications to correct unsafe conditions are required by other codes, the modifications shall be done in compliance with these guidelines unless technically infeasible.

(e) At least one interior public text telephone complying with 4.31.9 shall be provided if:

(i) alterations to existing buildings or facilities with less than four exterior or interior public pay telephones would increase the total number to four or more telephones with at least one in an interior location; or

(ii) alterations to one or more exterior or interior public pay telephones occur in an existing building or facility with four or more public telephones with at least one in an interior location.

(f) If an escalator or stair is planned or installed where none existed previously and major structural modifications are necessary for such installation, then a means of accessible vertical access shall be provided that complies with the applicable provisions of 4.7, 4.8, 4.10, or 4.11.

(g) In alterations, the requirements of 4.1.3(9), 4.3.10 and 4.3.11 do not apply.

(h)*Entrances: If a planned alteration entails alterations to an entrance, and the building has an accessible entrance, the entrance being altered is not required to comply with 4.1.3(8), except to the extent required by 4.1.6(2). If a particular entrance is not made accessible, appropriate accessible signage indicating the location of the nearest accessible entrance(s) shall be installed at or near the inaccessible entrance, such that a person with disabilities will not be required to retrace the approach route from the inaccessible entrance.

(i) If the alteration work is limited solely to the electrical, mechanical, or plumbing system, or to hazardous material abatement, or automatic sprinkler retrofitting, and does not involve the alteration of any elements or spaces required to be accessible under these guidelines, then 4.1.6(2) does not apply.

(j) EXCEPTION: In alteration work, if compliance with 4.1.6 is technically infeasible, the alteration shall provide accessibility to the maximum extent feasible. Any elements or features of the building or facility that are being altered and can be made accessible shall be made accessible within the scope of the alteration.

Technically Infeasible. Means, with respect to an alteration of a building or a facility, that it has little likelihood of being accomplished because existing structural conditions would require removing or altering a load-bearing member which is an essential part of the structural frame; or because other existing physical or site constraints prohibit modification or

4.1.6 Accessible Buildings: Alterations

addition of elements, spaces, or features which are in full and strict compliance with the minimum requirements for new construction and which are necessary to provide accessibility.

(k) EXCEPTION:

(i) These guidelines do not require the installation of an elevator in an altered facility that is less than three stories or has less than 3,000 square feet per story unless the building is a shopping center, a shopping mall, the professional office of a health care provider, or another type of facility as determined by the Attorney General.

(ii) The exemption provided in paragraph (i) does not obviate or limit in any way the obligation to comply with the other accessibility requirements established in these guidelines. For example, alterations to floors above or below the ground floor must be accessible regardless of whether the altered facility has an elevator. If a facility subject to the elevator exemption set forth in paragraph (i) nonetheless has a full passenger elevator, that elevator shall meet, to the maximum extent feasible, the accessibility requirements of these guidelines.

(2) Alterations to an Area Containing a Primary Function: In addition to the requirements of 4.1.6(1), an alteration that affects or could affect the usability of or access to an area containing a primary function shall be made so as to ensure that, to the maximum extent feasible, the path of travel to the altered area and the restrooms, telephones, and drinking fountains serving the altered area, are readily accessible to and usable by individuals with disabilities, unless such alterations are disproportionate to the overall alterations in terms of cost and scope (as determined under criteria established by the Attorney General).

(3) Special Technical Provisions for Alterations to Existing Buildings and Facilities:

(a) Ramps: Curb ramps and interior or exterior ramps to be constructed on sites or in existing buildings or facilities where space limitations prohibit the use of a 1:12 slope or less may have slopes and rises as follows:

(i) A slope between 1:10 and 1:12 is allowed for a maximum rise of 6 inches.

(ii) A slope between 1:8 and 1:10 is allowed for a maximum rise of 3 inches. A slope steeper than 1:8 is not allowed.

(b) Stairs: Full extension of handrails at stairs shall not be required in alterations where such extensions would be hazardous or impossible due to plan configuration.

(c) Elevators:

(i) If safety door edges are provided in existing automatic elevators, automatic door reopening devices may be omitted (see 4.10.6).

(ii) Where existing shaft configuration or technical infeasibility prohibits strict compliance with 4.10.9, the minimum car plan dimensions may be reduced by the minimum amount necessary, but in no case shall the inside car area be smaller than 48 in by 48 in.

(iii) Equivalent facilitation may be provided with an elevator car of different dimensions when usability can be demonstrated and when all other elements required to be accessible comply with the applicable provisions of 4.10. For example, an elevator of 47 in by 69 in (1195 mm by 1755 mm) with a door opening on the narrow dimension, could accommodate the standard wheelchair clearances shown in Figure 4.

(d) Doors:

(i) Where it is technically infeasible to comply with clear opening width requirements of 4.13.5, a projection of 5/8 in maximum will be permitted for the latch side stop.

(ii) If existing thresholds are 3/4 in high or less, and have (or are modified to have) a beveled edge on each side, they may remain.

(e) Toilet Rooms:

(i) Where it is technically infeasible to comply with 4.22 or 4.23, the installation of at least one unisex toilet/bathroom per floor, located in the same area as existing toilet facilities, will be permitted in lieu of modifying existing toilet facilities to be accessible. Each unisex toilet room shall contain one water closet complying with 4.16 and one lavatory complying with 4.19, and the door shall have a privacy latch.

(ii) Where it is technically infeasible to install a required standard stall (Fig. 30(a)), or where other codes prohibit reduction of the fixture count (i.e., removal of a water closet in order to create a double-wide stall), either alternate stall (Fig.30(b)) may be provided in lieu of the standard stall.

(iii) When existing toilet or bathing facilities are being altered and are not made accessible, signage complying with 4.30.1, 4.30.2, 4.30.3, 4.30.5, and 4.30.7 shall be provided indicating the location of the nearest accessible toilet or bathing facility within the facility.

(f) Assembly Areas:

(i) Where it is technically infeasible to disperse accessible seating throughout an altered assembly area, accessible seating areas may be clustered. Each accessible seating area shall have provisions for companion seating and shall be located on an accessible route that also serves as a means of emergency egress.

(ii) Where it is technically infeasible to alter all performing areas to be on an accessible route, at least one of each type of performing area shall be made accessible.

(g) Platform Lifts (Wheelchair Lifts): In alterations, platform lifts (wheelchair lifts) complying with 4.11 and applicable state or local codes may be used as part of an accessible route. The use of lifts is not limited to the four conditions in exception 4 of 4.1.3(5).

(h) Dressing Rooms: In alterations where technical infeasibility can be demonstrated, one dressing room for each sex on each level shall be made accessible. Where only unisex dressing rooms are provided, accessible unisex dressing rooms may be used to fulfill this requirement.

4.1.7 Accessible Buildings: Historic Preservation.

(1) Applicability:

(a) General Rule. Alterations to a qualified historic building or facility shall comply with 4.1.6 Accessible Buildings: Alterations, the applicable technical specifications of 4.2 through 4.35 and the applicable special application sections 5 through 10 unless it is determined in accordance with the procedures in 4.1.7(2) that compliance with the requirements for accessible routes (exterior and interior), ramps, entrances, or toilets would threaten or destroy the historic significance of the building or facility in which case the alternative requirements in 4.1.7(3) may be used for the feature.

EXCEPTION: (Reserved).

(b) Definition. A qualified historic building or facility is a building or facility that is:

(i) Listed in or eligible for listing in the National Register of Historic Places; or

(ii) Designated as historic under an appropriate State or local law.

(2) Procedures:

(a) Alterations to Qualified Historic Buildings and Facilities Subject to Section 106 of the National Historic Preservation Act:

(i) Section 106 Process. Section 106 of the National Historic Preservation Act (16 U.S.C. 470 f) requires that a Federal agency with jurisdiction over a Federal, federally assisted, or federally licensed undertaking consider the effects of the agency's undertaking on buildings and facilities listed in or eligible for listing in the National Register of Historic Places and give the Advisory Council on Historic Preservation a reasonable opportunity to comment on the undertaking prior to approval of the undertaking.

(ii) ADA Application. Where alterations are undertaken to a qualified historic building or facility that is subject to section 106 of the National Historic Preservation Act, the Federal agency with jurisdiction over the undertaking shall follow the section 106 process. If the State Historic Preservation Officer or Advisory Council on Historic Preservation agrees that compliance with the requirements for accessible routes (exterior and interior), ramps, entrances, or toilets would threaten or destroy the historic significance of the building or facility, the alternative requirements in 4.1.7(3) may be used for the feature.

(b) Alterations to Qualified Historic Buildings and Facilities Not Subject to Section 106 of the National Historic Preservation Act. Where alterations are undertaken to a qualified historic building or facility that is not subject to section 106 of the National Historic Preservation Act, if the entity undertaking the alterations believes that compliance with the requirements for accessible routes (exterior and interior), ramps, entrances, or toilets would threaten or destroy the historic significance of the building or facility and that the alternative requirements in 4.1.7(3) should be used for the feature, the entity should consult with the State Historic Preservation Officer. If the State Historic Preservation Officer agrees that compliance with the accessibility requirements for accessible routes (exterior and interior), ramps, entrances or toilets would threaten or destroy the historical significance of the building or facility, the alternative requirements in 4.1.7(3) may be used.

(c) Consultation With Interested Persons. Interested persons should be invited to participate in the consultation process, including State or local accessibility officials, individuals with disabilities, and organizations representing individuals with disabilities.

(d) Certified Local Government Historic Preservation Programs. Where the State Historic Preservation Officer has delegated the consultation responsibility for purposes of this section to a local government historic preservation program that has been certified in accordance with section 101(c) of the National Historic Preservation Act of 1966 (16 U.S.C. 470a (c)) and implementing regulations (36 CFR 61.5), the responsibility may be carried out by the appropriate local government body or official.

(3) Historic Preservation: Minimum Requirements:

(a) At least one accessible route complying with 4.3 from a site access point to an accessible entrance shall be provided.

EXCEPTION: A ramp with a slope no greater than 1:6 for a run not to exceed 2 ft (610 mm) may be used as part of an accessible route to an entrance.

(b) At least one accessible entrance complying with 4.14 which is used by the public shall be provided.

EXCEPTION: If it is determined that no entrance used by the public can comply with 4.14, then access at any entrance not used by the general public but open (unlocked) with directional signage at the primary entrance may be used. The accessible entrance shall also have a notification system. Where security is a problem, remote monitoring may be used.

(c) If toilets are provided, then at least one toilet facility complying with 4.22 and 4.1.6 shall be provided along an accessible route that complies with 4.3. Such toilet facility may be unisex in design.

(d) Accessible routes from an accessible entrance to all publicly used spaces on at least the level of the accessible entrance shall be provided. Access shall be provided to all levels of a building or facility in compliance with 4.1 whenever practical.

(e) Displays and written information, documents, etc., should be located where they can be seen by a seated person. Exhibits and signage displayed horizontally (e.g., open books), should be no higher than 44 in (1120 mm) above the floor surface.

NOTE: The technical provisions of sections 4.2 through 4.35 are the same as those of the American National Standard Institute's document A117.1-1980, except as noted in the text.

4.2 Space Allowance and Reach Ranges.

4.2.1* Wheelchair Passage Width. The minimum clear width for single wheelchair passage shall be 32 in (815 mm) at a point and 36 in (915 mm) continuously (see Fig. 1 and 24(e)).

4.2.2 Width for Wheelchair Passing. The minimum width for two wheelchairs to pass is 60 in (1525 mm) (see Fig. 2).

4.2.3* Wheelchair Turning Space. The space required for a wheelchair to make a 180-degree turn is a clear space of 60 in (1525 mm)

4.2.4* Clear Floor or Ground Space for Wheelchairs

diameter (see Fig. 3(a)) or a T-shaped space (see Fig. 3(b)).

4.2.4* Clear Floor or Ground Space for Wheelchairs.

4.2.4.1 Size and Approach. The minimum clear floor or ground space required to accommodate a single, stationary wheelchair and occupant is 30 in by 48 in (760 mm by 1220 mm) (see Fig. 4(a)). The minimum clear floor or ground space for wheelchairs may be positioned for forward or parallel approach to an object (see Fig. 4(b) and (c)). Clear floor or ground space for wheelchairs may be part of the knee space required under some objects.

4.2.4.2 Relationship of Maneuvering Clearance to Wheelchair Spaces. One full unobstructed side of the clear floor or ground space for a wheelchair shall adjoin or overlap an accessible route or adjoin another wheelchair clear floor space. If a clear floor space is located in an alcove or otherwise confined on all or part of three sides, additional maneuvering clearances shall be provided as shown in Fig. 4(d) and (e).

4.2.4.3 Surfaces for Wheelchair Spaces. Clear floor or ground spaces for wheelchairs shall comply with 4.5.

4.2.5* Forward Reach. If the clear floor space only allows forward approach to an object, the maximum high forward reach allowed shall be 48 in (1220 mm) (see Fig. 5(a)). *The minimum low forward reach is 15 in (380 mm).* If the high forward reach is over an obstruction, reach and clearances shall be as shown in Fig. 5(b).

4.2.6* Side Reach. If the clear floor space allows parallel approach by a person in a wheelchair, the maximum high side reach allowed shall be 54 in (1370 mm) and the low side reach shall be no less than 9 in (230 mm) above the floor (Fig. 6(a) and (b)). If the side reach is over an obstruction, the reach and clearances shall be as shown in Fig 6(c).

4.3 Accessible Route.

4.3.1* General. All walks, halls, corridors, aisles, *skywalks, tunnels,* and other spaces

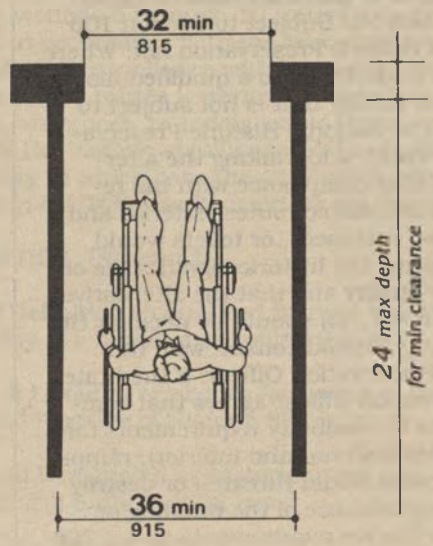

Fig. 1
Minimum Clear Width
for Single Wheelchair

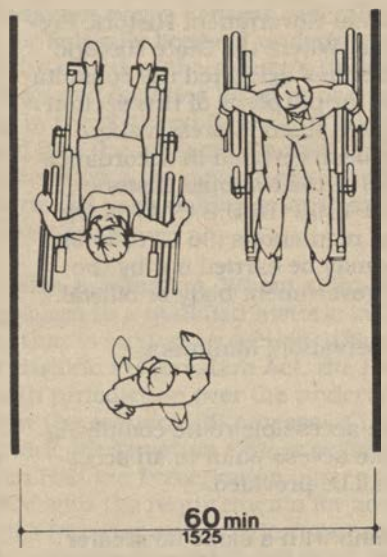

Fig. 2
Minimum Clear Width
for Two Wheelchairs

4.3 Accessible Route

that are part of an accessible route shall comply with 4.3.

4.3.2 Location.

(1) At least one accessible route *within the boundary of the site* shall be provided from public transportation stops, accessible parking, and accessible passenger loading zones, and public streets or sidewalks to the accessible building entrance they serve. *The accessible route shall, to the maximum extent feasible, coincide with the route for the general public.*

(2) At least one accessible route shall connect accessible buildings, facilities, elements, and spaces that are on the same site.

(3) At least one accessible route shall connect accessible building or facility entrances with all accessible spaces and elements and with all accessible dwelling units within the building or facility.

(4) An accessible route shall connect at least one accessible entrance of each accessible dwelling unit with those exterior and interior spaces and facilities that serve the accessible dwelling unit.

4.3.3 Width. The minimum clear width of an accessible route shall be 36 in (915 mm) except at doors (see 4.13.5 and 4.13.6). If a person in a wheelchair must make a turn around an obstruction, the minimum clear width of the accessible route shall be as shown in Fig. 7(a) and (b).

4.3.4 Passing Space. If an accessible route has less than 60 in (1525 mm) clear width, then passing spaces at least 60 in by 60 in (1525 mm by 1525 mm) shall be located at reasonable intervals not to exceed 200 ft (61 m). A T-intersection of two corridors or walks is an acceptable passing place.

4.3.5 Head Room. Accessible routes shall comply with 4.4.2.

4.3.6 Surface Textures. The surface of an accessible route shall comply with 4.5.

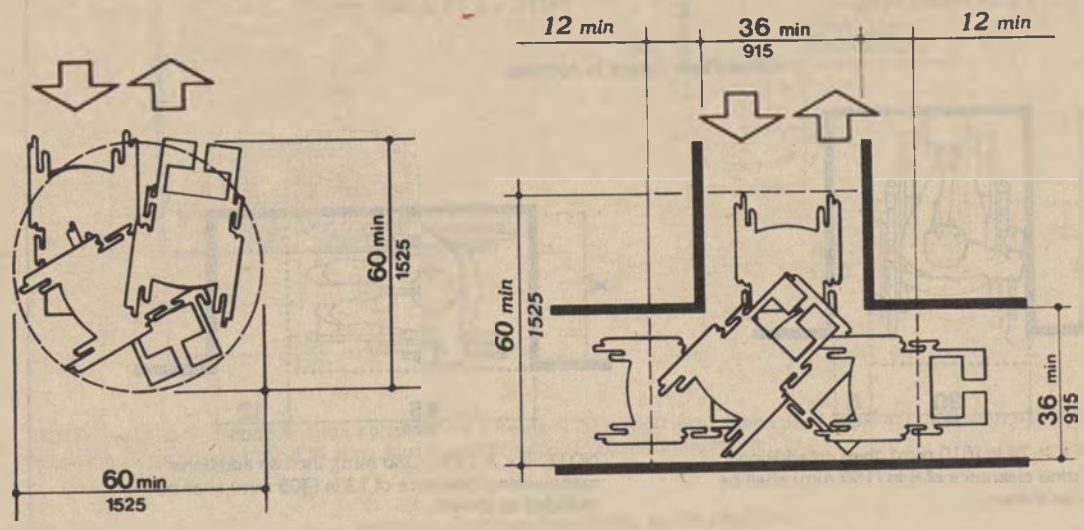

(a)
60-in (1525-mm)-Diameter Space

(b)
T-Shaped Space for 180° Turns

Fig. 3
Wheelchair Turning Space

4.3 Accessible Route

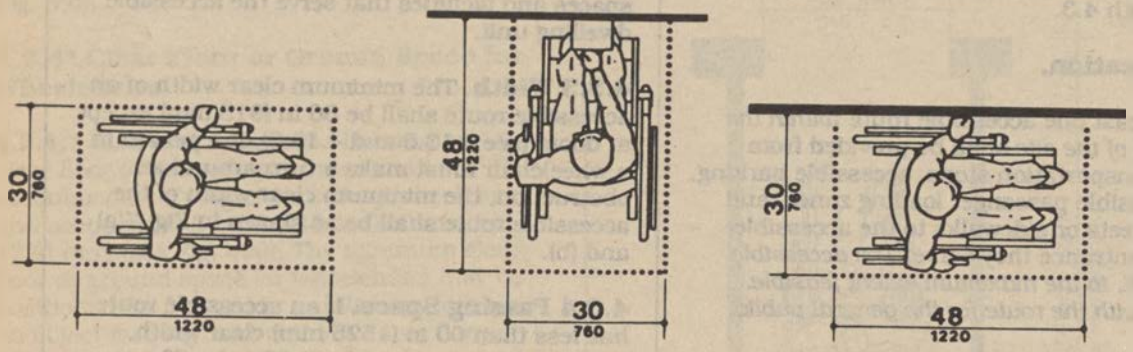

(a) Clear Floor Space

(b) Forward Approach

(c) Parallel Approach

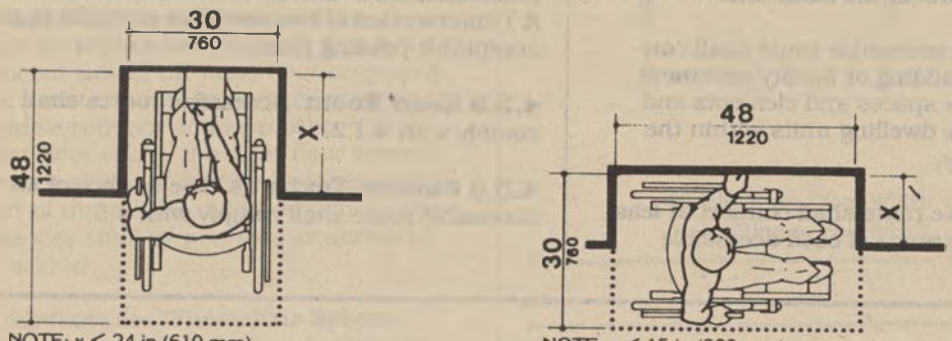

NOTE: x ≤ 24 in (610 mm).

NOTE: x ≤ 15 in (380 mm).

(d) Clear Floor Space in Alcoves

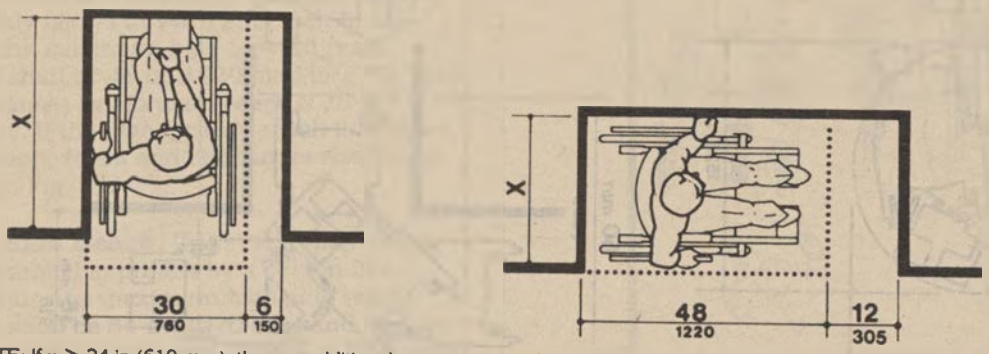

NOTE: If x > 24 in (610 mm), then an additional maneuvering clearance of 6 in (150 mm) shall be provided as shown.

NOTE: If x > 15 in (380 mm), then an additional maneuvering clearance of 12 in (305 mm) shall be provided as shown.

(e) Additional Maneuvering Clearances for Alcoves

Fig. 4
Minimum Clear Floor Space for Wheelchairs

4.3 Accessible Route

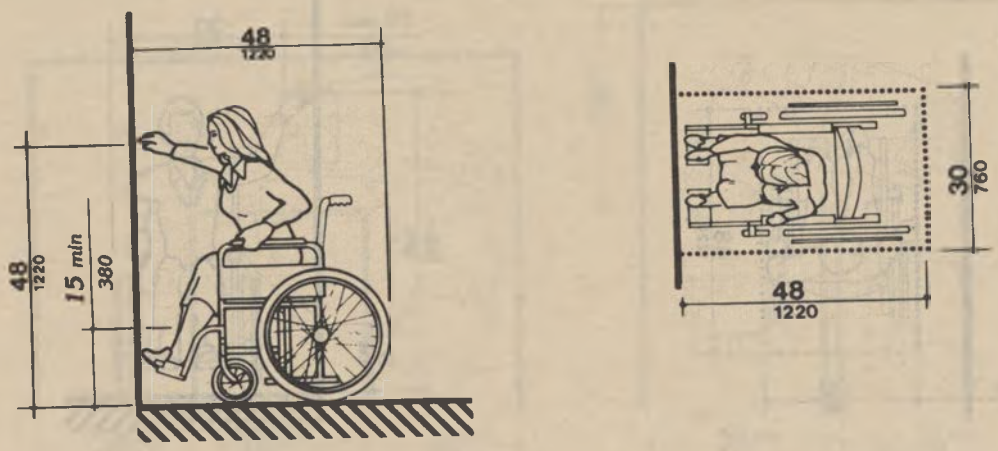

(a)
High Forward Reach Limit

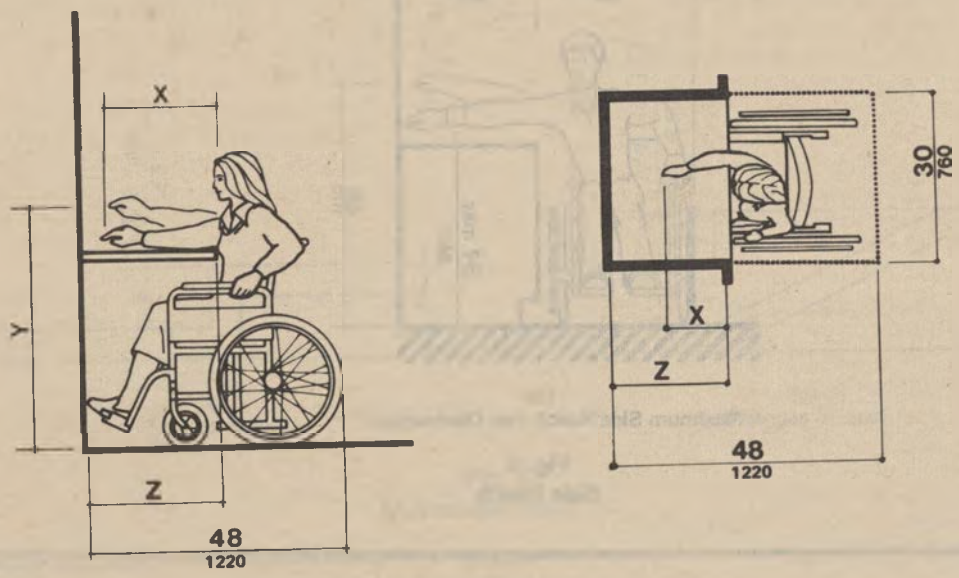

NOTE: x shall be ≤ 25 in (635 mm); z shall be ≥ x. When x < 20 in (510 mm), then y shall be 48 in (1220 mm) maximum. When x is 20 to 25 in (510 to 635 mm), then y shall be 44 in (1120 mm) maximum.

(b)
Maximum Forward Reach over an Obstruction

Fig. 5
Forward Reach

4.3.7 Slope

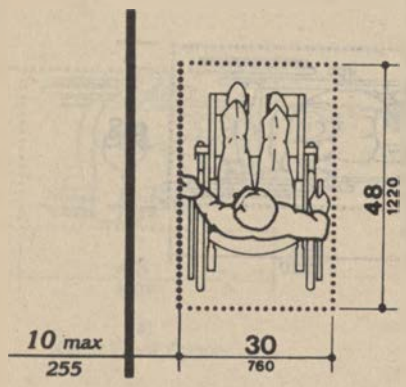

(a)
Clear Floor Space Parallel Approach

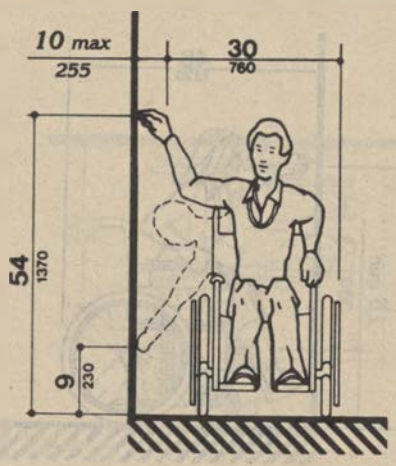

(b)
High and Low Side Reach Limits

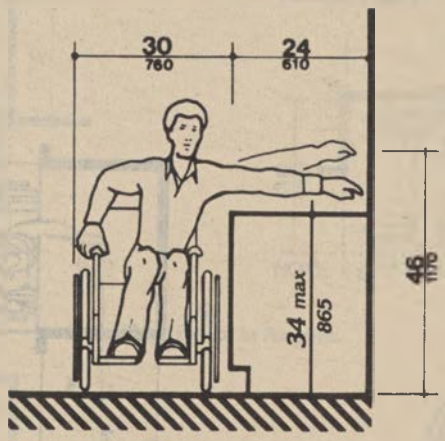

(c)
Maximum Side Reach over Obstruction

Fig. 6
Side Reach

4.3.7 Slope. An accessible route with a running slope greater than 1:20 is a ramp and shall comply with 4.8. Nowhere shall the cross slope of an accessible route exceed 1:50.

4.3.8 Changes in Levels. Changes in levels along an accessible route shall comply with 4.5.2. If an accessible route has changes in level greater than 1/2 in (13 mm), then a curb ramp, ramp, elevator, or platform lift *(as permitted in 4.1.3 and 4.1.6)* shall be provided that complies with 4.7, 4.8, 4.10, or 4.11, respectively. An accessible route does not include stairs, steps, or escalators. See definition of "egress, means of" in 3.5.

4.3.9 Doors. Doors along an accessible route shall comply with 4.13.

4.3.10* Egress

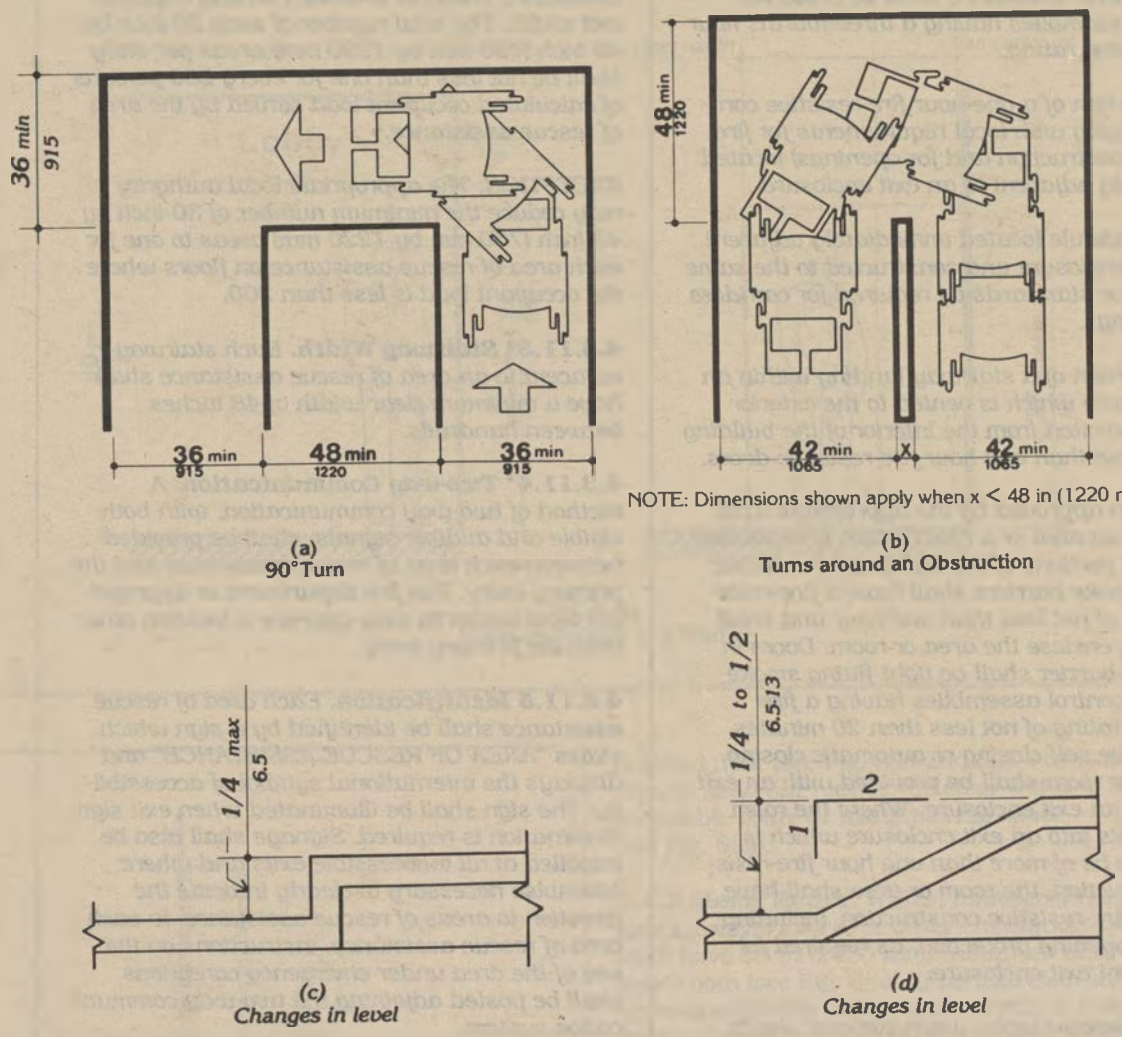

(a)
90° Turn

(b)
Turns around an Obstruction

(c)
Changes in level

(d)
Changes in level

Fig. 7
Accessible Route

4.3.10* Egress. Accessible routes serving any accessible space or element shall also serve as a means of egress for emergencies or connect to an accessible area of *rescue assistance.*

4.3.11 Areas of Rescue Assistance.

4.3.11.1 Location and Construction. *An area of rescue assistance shall be one of the following:*

(1) A portion of a stairway landing within a smokeproof enclosure (complying with local requirements).

(2) A portion of an exterior exit balcony located immediately adjacent to an exit stairway when the balcony complies with local requirements for exterior exit balconies. Openings to the interior of the building located within 20 feet (6 m) of the

area of rescue assistance shall be protected with fire assemblies having a three-fourths hour fire protection rating.

(3) A portion of a one-hour fire-resistive corridor (complying with local requirements for fire-resistive construction and for openings) located immediately adjacent to an exit enclosure.

(4) A vestibule located immediately adjacent to an exit enclosure and constructed to the same fire-resistive standards as required for corridors and openings.

(5) A portion of a stairway landing within an exit enclosure which is vented to the exterior and is separated from the interior of the building with not less than one-hour fire-resistive doors.

(6) When approved by the appropriate local authority, an area or a room which is separated from other portions of the building by a smoke barrier. Smoke barriers shall have a fire-resistive rating of not less than one hour and shall completely enclose the area or room. Doors in the smoke barrier shall be tight-fitting smoke- and draft-control assemblies having a fire-protection rating of not less than 20 minutes and shall be self-closing or automatic closing. The area or room shall be provided with an exit directly to an exit enclosure. Where the room or area exits into an exit enclosure which is required to be of more than one-hour fire-resistive construction, the room or area shall have the same fire-resistive construction, including the same opening protection, as required for the adjacent exit enclosure.

(7) An elevator lobby when elevator shafts and adjacent lobbies are pressurized as required for smokeproof enclosures by local regulations and when complying with requirements herein for size, communication, and signage. Such pressurization system shall be activated by smoke detectors on each floor located in a manner approved by the appropriate local authority. Pressurization equipment and its duct work within the building shall be separated from other portions of the building by a minimum two-hour fire-resistive construction.

4.3.11.2 Size. *Each area of rescue assistance shall provide at least two accessible areas each being not less than 30 inches by 48 inches (760 mm by 1220 mm). The area of rescue assistance shall not encroach on any required exit width. The total number of such 30-inch by 48-inch (760 mm by 1220 mm) areas per story shall be not less than one for every 200 persons of calculated occupant load served by the area of rescue assistance.*

EXCEPTION: The appropriate local authority may reduce the minimum number of 30-inch by 48-inch (760 mm by 1220 mm) areas to one for each area of rescue assistance on floors where the occupant load is less than 200.

4.3.11.3* Stairway Width. *Each stairway adjacent to an area of rescue assistance shall have a minimum clear width of 48 inches between handrails.*

4.3.11.4* Two-way Communication. *A method of two-way communication, with both visible and audible signals, shall be provided between each area of rescue assistance and the primary entry. The fire department or appropriate local authority may approve a location other than the primary entry.*

4.3.11.5 Identification. *Each area of rescue assistance shall be identified by a sign which states "AREA OF RESCUE ASSISTANCE" and displays the international symbol of accessibility. The sign shall be illuminated when exit sign illumination is required. Signage shall also be installed at all inaccessible exits and where otherwise necessary to clearly indicate the direction to areas of rescue assistance. In each area of rescue assistance, instructions on the use of the area under emergency conditions shall be posted adjoining the two-way communication system.*

4.4 Protruding Objects.

4.4.1* General. Objects projecting from walls (for example, telephones) with their leading edges between 27 in and 80 in (685 mm and 2030 mm) above the finished floor shall protrude no more than 4 in (100 mm) into walks, halls, corridors, passageways, or aisles (see Fig. 8(a)). Objects mounted with their leading edges at or below 27 in (685 mm) above the finished floor may protrude any amount (see Fig. 8(a) and (b)). Free-standing objects mounted on posts or pylons may overhang 12 in (305 mm) maximum from 27 in to 80 in (685 mm to 2030 mm) above the ground or

4.4 Protruding Objects

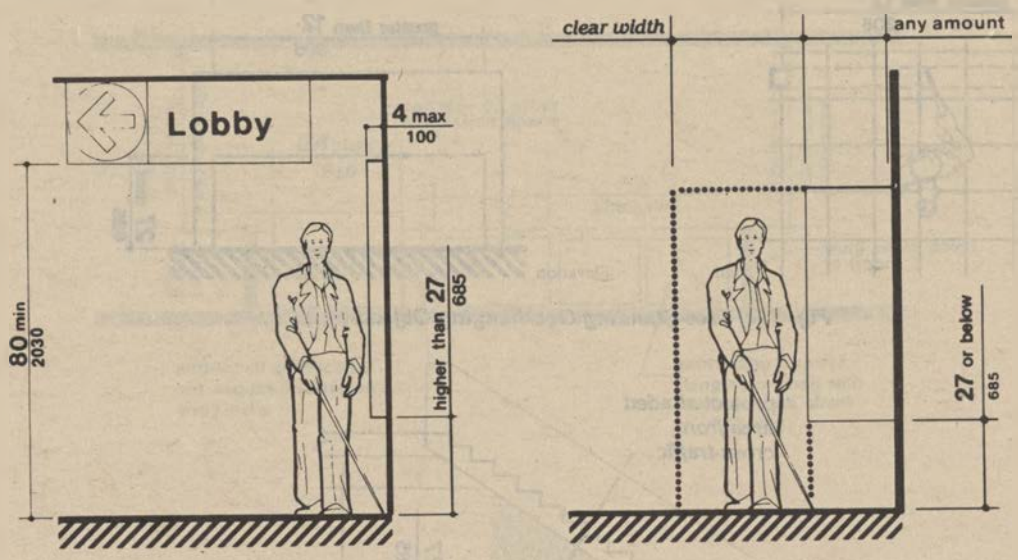

Fig. 8 (a)
Walking Parallel to a Wall

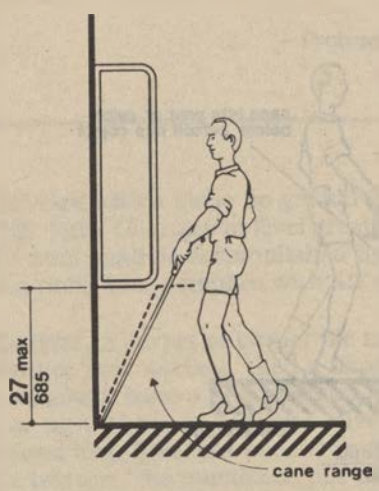

Fig. 8 (b)
Walking Perpendicular to a Wall

Fig. 8
Protruding Objects

finished floor (see Fig. 8(c) and (d)). Protruding objects shall not reduce the clear width of an accessible route or maneuvering space (see Fig. 8(e)).

4.4.2 Head Room. Walks, halls, corridors, passageways, aisles, or other circulation spaces shall have 80 in (2030 mm) minimum clear head room (see Fig. 8(a)). *If vertical clearance of an area adjoining an accessible route is reduced to less than 80 in (nominal dimension), a barrier to warn blind or visually-impaired persons shall be provided (see Fig. 8(c-1)).*

4.5 Ground and Floor Surfaces.

4.5.1* General. Ground and floor surfaces along accessible routes and in accessible rooms and spaces including floors, walks, ramps, stairs, and curb ramps, shall be stable, firm, slip-resistant, and shall comply with 4.5.

4.5.2 Changes in Level. Changes in level up to 1/4 in (6 mm) may be vertical and without edge treatment *(see Fig. 7(c))*. Changes in level between 1/4 in and 1/2 in (6 mm and 13 mm)

4.4 Protruding Objects

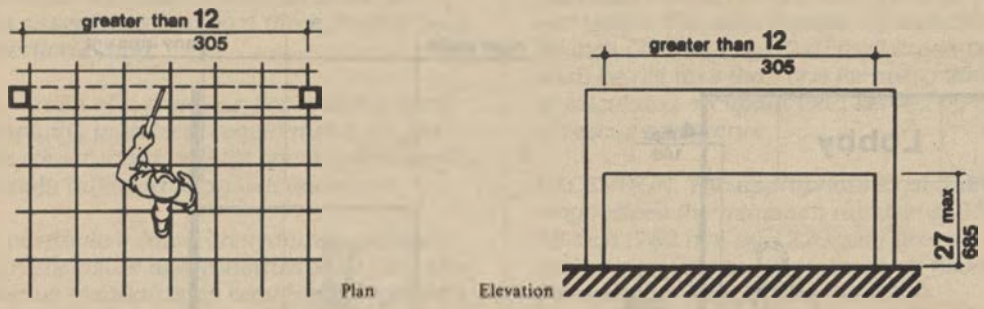

Fig. 8 (c) Free-Standing Overhanging Objects

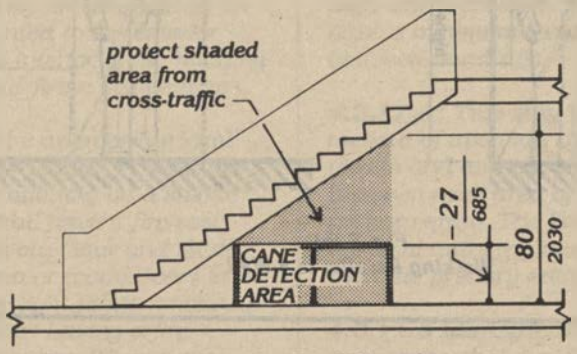

Fig. 8 (c-1) Overhead Hazards

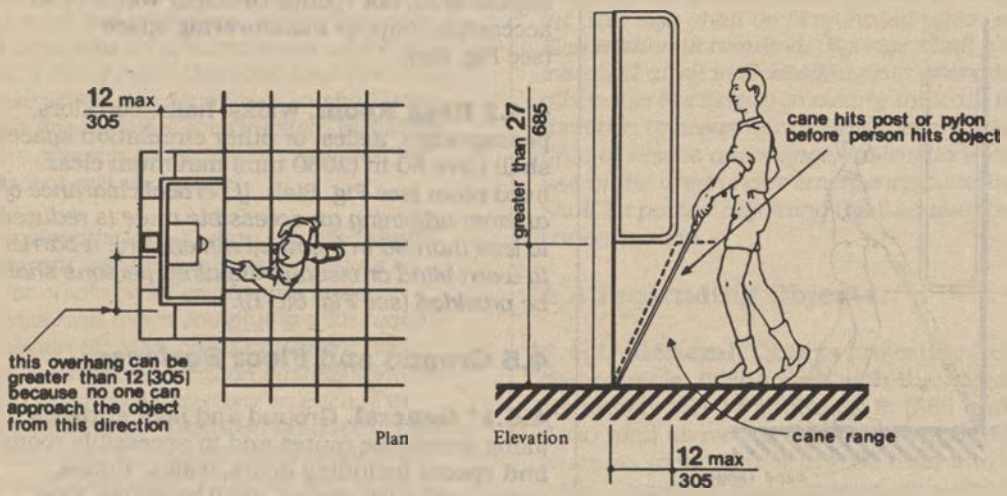

Fig. 8 (d)
Objects Mounted on Posts or Pylons

Fig. 8
Protruding Objects *(Continued)*

4.5 Ground and Floor Surfaces

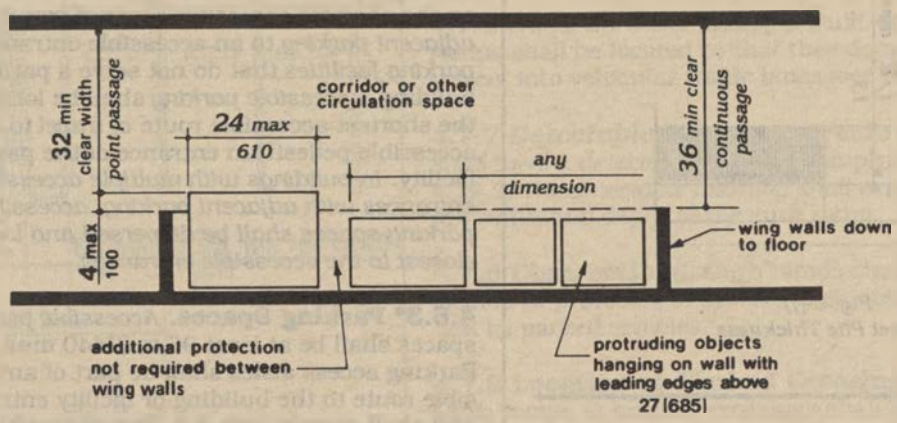

Fig. 8 (e)
Example of Protection around Wall-Mounted Objects and Measurements of Clear Widths

Fig. 8
Protruding Objects *(Continued)*

shall be beveled with a slope no greater than 1:2 *(see Fig. 7(d))*. Changes in level greater than 1/2 in (13 mm) shall be accomplished by means of a ramp that complies with 4.7 or 4.8.

4.5.3* Carpet. If carpet or carpet tile is used on a ground or floor surface, then it shall be securely attached; have a firm cushion, pad, or backing, or no cushion or pad; and have a level loop, textured loop, level cut pile, or level cut/uncut pile texture. The maximum pile *thickness* shall be 1/2 in (13 mm) (see Fig. 8(f)). Exposed edges of carpet shall be fastened to floor surfaces and have trim along the entire length of the exposed edge. Carpet edge trim shall comply with 4.5.2.

4.5.4 Gratings. If gratings are located in walking surfaces, then they shall have spaces no greater than 1/2 in (13 mm) wide in one direction *(see Fig. 8(g))*. If gratings have elongated openings, then they shall be placed so that the long dimension is perpendicular to the dominant direction of travel *(see Fig. 8(h))*.

4.6 Parking and Passenger Loading Zones.

4.6.1 Minimum Number. *Parking spaces required to be accessible by 4.1 shall comply with 4.6.2 through 4.6.5. Passenger loading zones required to be accessible by 4.1 shall comply with 4.6.5 and 4.6.6.*

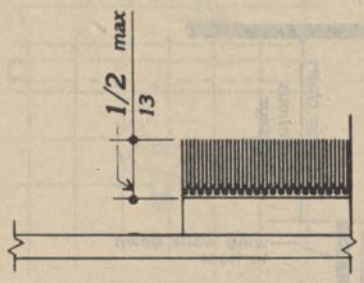

Fig. 8 (f)
Carpet Pile Thickness

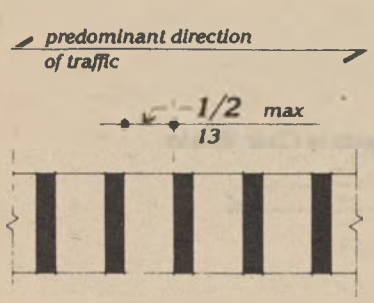

Fig. 8 (g)
Gratings

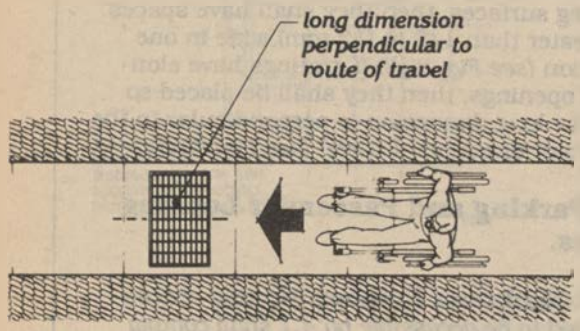

Fig. 8 (h)
Grating Orientation

4.6.2 Location. *Accessible parking spaces serving* a particular building shall be located on the shortest accessible route of travel *from adjacent parking* to an accessible entrance. *In parking facilities* that do not serve a particular building, *accessible parking* shall be located on the shortest accessible route *of travel* to an accessible pedestrian entrance of the parking facility. *In buildings with multiple accessible entrances with adjacent parking, accessible parking spaces shall be dispersed and located closest to the accessible entrances.*

4.6.3* Parking Spaces. *Accessible* parking spaces shall be at least 96 in (2440 mm) wide. Parking access aisles shall be part of an accessible route to the building or facility entrance and shall comply with 4.3. Two accessible parking spaces may share a common access aisle (see Fig. 9). Parked vehicle overhangs shall not reduce the clear width of an accessible route. *Parking spaces and access aisles shall be level with surface slopes not exceeding 1:50 (2%) in all directions.*

4.6.4* Signage. Accessible parking spaces shall be designated as reserved by a sign showing the symbol of accessibility (see 4.30.7). *Spaces complying with 4.1.2(5)(b) shall have an additional sign "Van-Accessible" mounted below the symbol of accessibility.* Such signs shall *be located so they cannot* be obscured by a vehicle parked in the space.

4.6.5* *Vertical Clearance.* *Provide minimum vertical clearance of 114 in (2895 mm) at accessible passenger loading zones and along at least one vehicle access route to such areas from site entrance(s) and exit(s). At parking spaces complying with 4.1.2(5)(b), provide minimum vertical clearance of 98 in (2490 mm) at the parking space and along at least one vehicle access route to such spaces from site entrance(s) and exit(s).*

4.6.6 Passenger Loading Zones. Passenger loading zones shall provide an access aisle at least *60* in *(1525 mm)* wide and 20 ft *(240 in) (6100 mm)* long adjacent and parallel to the vehicle pull-up space (see Fig. 10). If there are curbs between the access aisle and the vehicle pull-up space, then a curb ramp complying with 4.7 shall be provided. *Vehicle standing spaces and access aisles shall be level with*

4.7 Curb Ramps

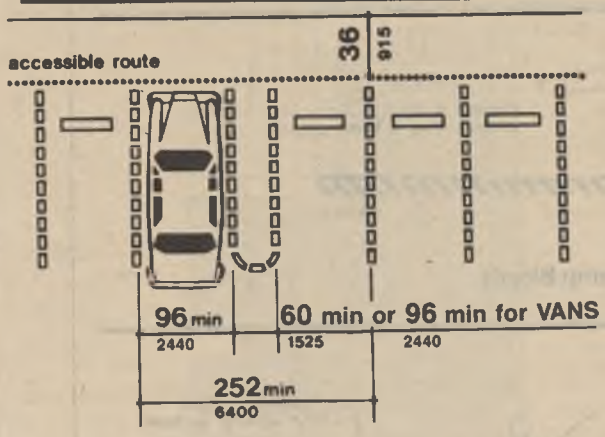

Fig. 9
Dimensions of Parking Spaces

surface slopes not exceeding 1:50 (2%) in all directions.

4.7 Curb Ramps.

4.7.1 Location. Curb ramps complying with 4.7 shall be provided wherever an accessible route crosses a curb.

4.7.2 Slope. Slopes of curb ramps shall comply with 4.8.2. The slope shall be measured as shown in Fig. 11. *Transitions from ramps to walks, gutters, or streets shall be flush and free of abrupt changes. Maximum slopes of adjoining gutters, road surface immediately adjacent to the curb ramp, or accessible route shall not exceed 1:20.*

4.7.3 Width. The minimum width of a curb ramp shall be 36 in (915 mm), exclusive of flared sides.

4.7.4 Surface. Surfaces of curb ramps shall comply with 4.5.

4.7.5 Sides of Curb Ramps. If a curb ramp is located where pedestrians must walk across the ramp, *or where it is not protected by handrails or guardrails,* it shall have flared sides; the maximum slope of the flare shall be 1:10 (see Fig. 12(a)). Curb ramps with returned curbs may be used where pedestrians would not normally walk across the ramp (see Fig. 12(b)).

4.7.6 Built-up Curb Ramps. Built-up curb ramps shall be located so that they do not project into vehicular traffic lanes (see Fig. 13).

4.7.7 *Detectable Warnings.* A curb ramp shall have a *detectable* warning complying with 4.29.2. *The detectable warning shall extend* the full width and depth of the curb ramp.

4.7.8 Obstructions. Curb ramps shall be located or protected to prevent their obstruction by parked vehicles.

4.7.9 Location at Marked Crossings. Curb ramps at marked crossings shall be wholly contained within the markings, excluding any flared sides (see Fig. 15).

4.7.10 Diagonal Curb Ramps. If diagonal (or corner type) curb ramps have returned curbs or other well-defined edges, such edges shall be parallel to the direction of pedestrian flow. The bottom of diagonal curb ramps shall have 48 in (1220 mm) minimum clear space as shown in Fig. 15(c) and (d). If diagonal curb ramps are provided at marked crossings, the 48 in (1220 mm) clear space shall be within the markings (see Fig. 15(c) and (d)). If diagonal curb ramps have flared sides, they shall also have at least a 24 in (610 mm) long segment of straight curb located on each side of the curb ramp and within the marked crossing (see Fig. 15(c)).

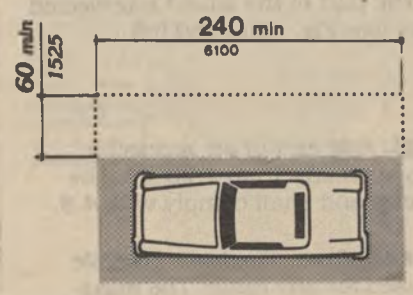

Fig. 10
Access Aisle at Passenger Loading Zones

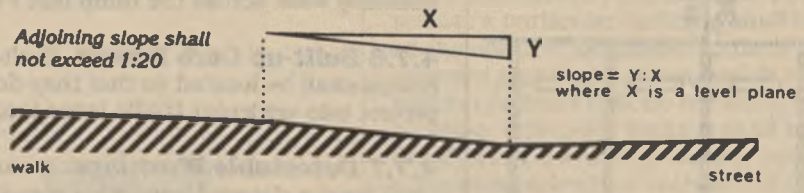

Fig. 11
Measurement of Curb Ramp Slopes

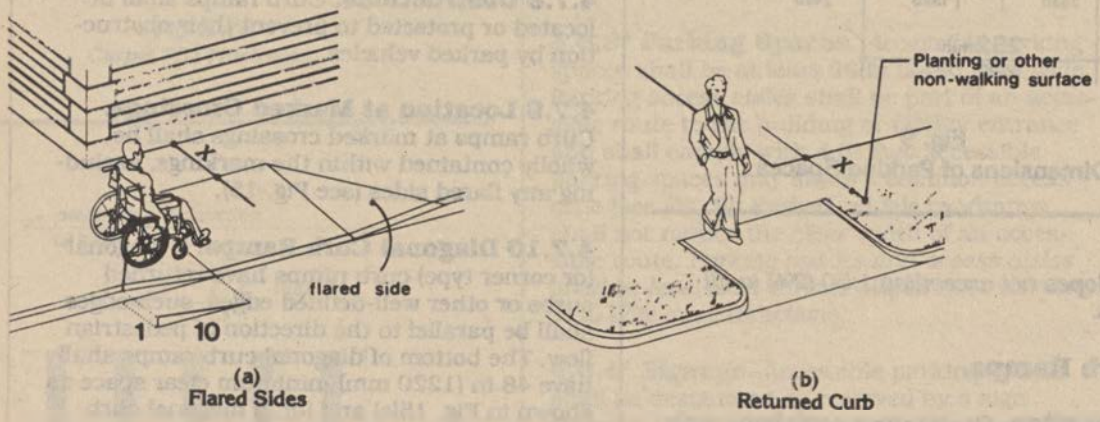

If X is less than 48 in, then the slope of the flared side shall not exceed 1:12.

Fig. 12
Sides of Curb Ramps

4.7.11 Islands. Any raised islands in crossings shall be cut through level with the street or have curb ramps at both sides and a level area at least 48 in (1220 mm) long between the curb ramps in the part of the island intersected by the crossings (see Fig. 15(a) and (b)).

4.8 Ramps.

4.8.1* General. Any part of an accessible route with a slope greater than 1:20 shall be considered a ramp and shall comply with 4.8.

4.8.2* Slope and Rise. The least possible slope shall be used for any ramp. The maximum slope of a ramp in new construction shall be 1:12. The maximum rise for any run shall be 30 in (760 mm) (see Fig. 16). Curb ramps and ramps to be constructed on existing sites or in existing buildings or facilities may have slopes and rises as *allowed in 4.1.6(3)(a)* if space limitations prohibit the use of a 1:12 slope or less.

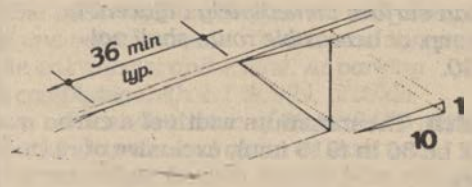

Fig. 13
Built-Up Curb Ramp

4.8 Ramps

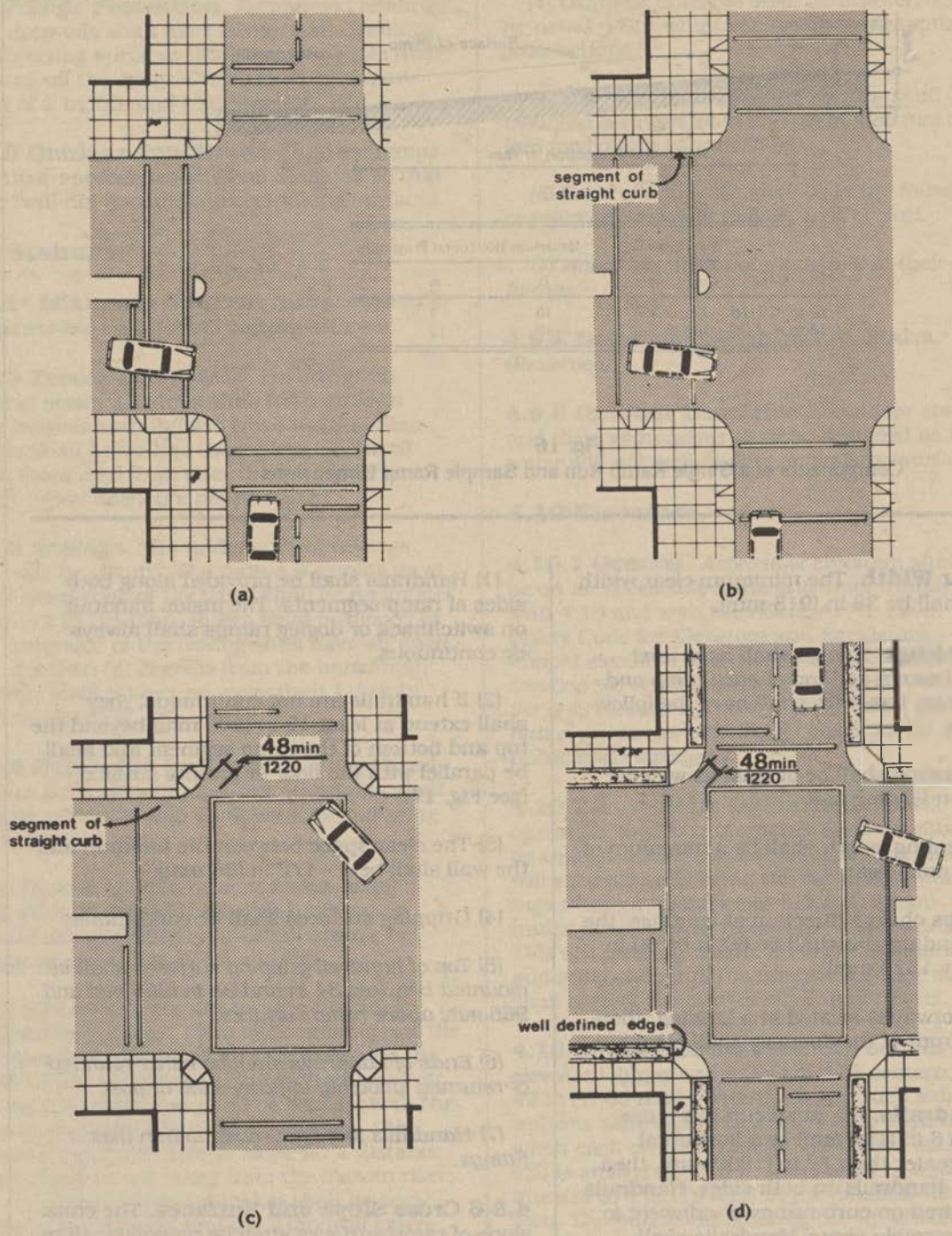

Fig. 15
Curb Ramps at Marked Crossings

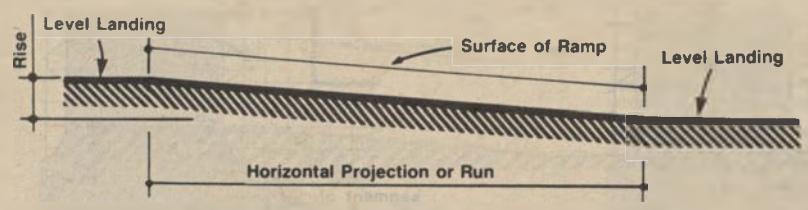

	Maximum Rise		Maximum Horizontal Projection	
Slope	in	mm	ft	m
1:12 to < 1:16	30	760	30	9
1:16 to < 1:20	30	760	40	12

Fig. 16
Components of a Single Ramp Run and Sample Ramp Dimensions

4.8.3 Clear Width. The minimum clear width of a ramp shall be 36 in (915 mm).

4.8.4* Landings. Ramps shall have level landings at bottom and top of *each ramp and* each *ramp* run. Landings shall have the following features:

(1) The landing shall be at least as wide as the ramp run leading to it.

(2) The landing length shall be a minimum of 60 in (1525 mm) clear.

(3) If ramps change direction at landings, the minimum landing size shall be 60 in by 60 in (1525 mm by 1525 mm).

(4) If a doorway is located at a landing, then the area in front of the doorway shall comply with 4.13.6.

4.8.5* Handrails. If a ramp run has a rise greater than 6 in (150 mm) or a horizontal projection greater than 72 in (1830 mm), then it shall have handrails on both sides. Handrails are not required on curb ramps *or adjacent to seating in assembly areas.* Handrails shall comply with 4.26 and shall have the following features:

(1) Handrails shall be provided along both sides of ramp segments. The inside handrail on switchback or dogleg ramps shall always be continuous.

(2) If handrails are not continuous, they shall extend at least 12 in (305 mm) beyond the top and bottom of the ramp segment and shall be parallel with the floor or ground surface (see Fig. 17).

(3) The clear space between the handrail and the wall shall be 1 - 1/2 in (38 mm).

(4) Gripping surfaces shall be continuous.

(5) Top of handrail gripping surfaces shall be mounted between 34 in and 38 in (865 mm and 965 mm) above ramp surfaces.

(6) Ends of handrails shall be either rounded or returned smoothly to floor, wall, or post.

(7) Handrails shall not rotate within their fittings.

4.8.6 Cross Slope and Surfaces. The cross slope of ramp surfaces shall be no greater than 1:50. Ramp surfaces shall comply with 4.5.

4.9 Stairs

4.8.7 Edge Protection. Ramps and landings with drop-offs shall have curbs, walls, railings, or projecting surfaces that prevent people from slipping off the ramp. Curbs shall be a minimum of 2 in (50 mm) high (see Fig. 17).

4.8.8 Outdoor Conditions. Outdoor ramps and their approaches shall be designed so that water will not accumulate on walking surfaces.

4.9 Stairs.

4.9.1* Minimum Number. *Stairs required to be accessible by 4.1 shall comply with 4.9.*

4.9.2 Treads and Risers. On any given flight of stairs, all steps shall have uniform riser heights and uniform tread widths. Stair treads shall be no less than 11 in (280 mm) wide, measured from riser to riser (see Fig. 18(a)). *Open risers are not permitted.*

4.9.3 Nosings. The undersides of nosings shall not be abrupt. The radius of curvature at the leading edge of the tread shall be no greater than 1/2 in (13 mm). Risers shall be sloped or the underside of the nosing shall have an angle not less than 60 degrees from the horizontal. Nosings shall project no more than 1-1/2 in (38 mm) (see Fig. 18).

4.9.4 Handrails. Stairways shall have handrails at both sides of all stairs. Handrails shall comply with 4.26 and shall have the following features:

(1) Handrails shall be continuous along both sides of stairs. The inside handrail on switchback or dogleg stairs shall always be continuous (see Fig. 19(a) and (b)).

(2) If handrails are not continuous, they shall extend at least 12 in (305 mm) beyond the top riser and at least 12 in (305 mm) plus the width of one tread beyond the bottom riser. At the top, the extension shall be parallel with the floor or ground surface. At the bottom, the handrail shall continue to slope for a distance of the width of one tread from the bottom riser; the remainder of the extension shall be horizontal (see Fig. 19(c) and (d)). Handrail extensions shall comply with 4.4.

(3) The clear space between handrails and wall shall be 1-1/2 in (38 mm).

(4) Gripping surfaces shall be uninterrupted by newel posts, other construction elements, or obstructions.

(5) Top of handrail gripping surface shall be mounted between 34 in and 38 in (865 mm and 965 mm) above stair nosings.

(6) Ends of handrails shall be either rounded or returned smoothly to floor, wall or post.

(7) Handrails shall not rotate within their fittings.

4.9.5 *Detectable* Warnings at Stairs. *(Reserved).*

4.9.6 Outdoor Conditions. Outdoor stairs and their approaches shall be designed so that water will not accumulate on walking surfaces.

4.10 Elevators.

4.10.1 General. *Accessible* elevators shall be on an accessible route and shall comply with 4.10 and with the *ASME A17.1-1990*, Safety Code for Elevators and Escalators. *Freight elevators shall not be considered as meeting the requirements of this section unless the only elevators provided are used as combination passenger and freight elevators for the public and employees.*

4.10.2 Automatic Operation. Elevator operation shall be automatic. Each car shall be equipped with a self-leveling feature that will automatically bring the car to floor landings within a tolerance of 1/2 in (13 mm) under rated loading to zero loading conditions. This self-leveling feature shall be automatic and independent of the operating device and shall correct the overtravel or undertravel.

4.10.3 Hall Call Buttons. Call buttons in elevator lobbies and halls shall be centered at 42 in (1065 mm) above the floor. Such call buttons shall have visual signals to indicate when each call is registered and when each call is answered. Call buttons shall be a minimum of 3/4 in (19 mm) in the smallest dimension. The button designating the up direction shall be on top. (See Fig. 20.) *Buttons shall be raised or flush. Objects mounted beneath hall call buttons shall not project into the elevator lobby more than 4 in (100 mm).*

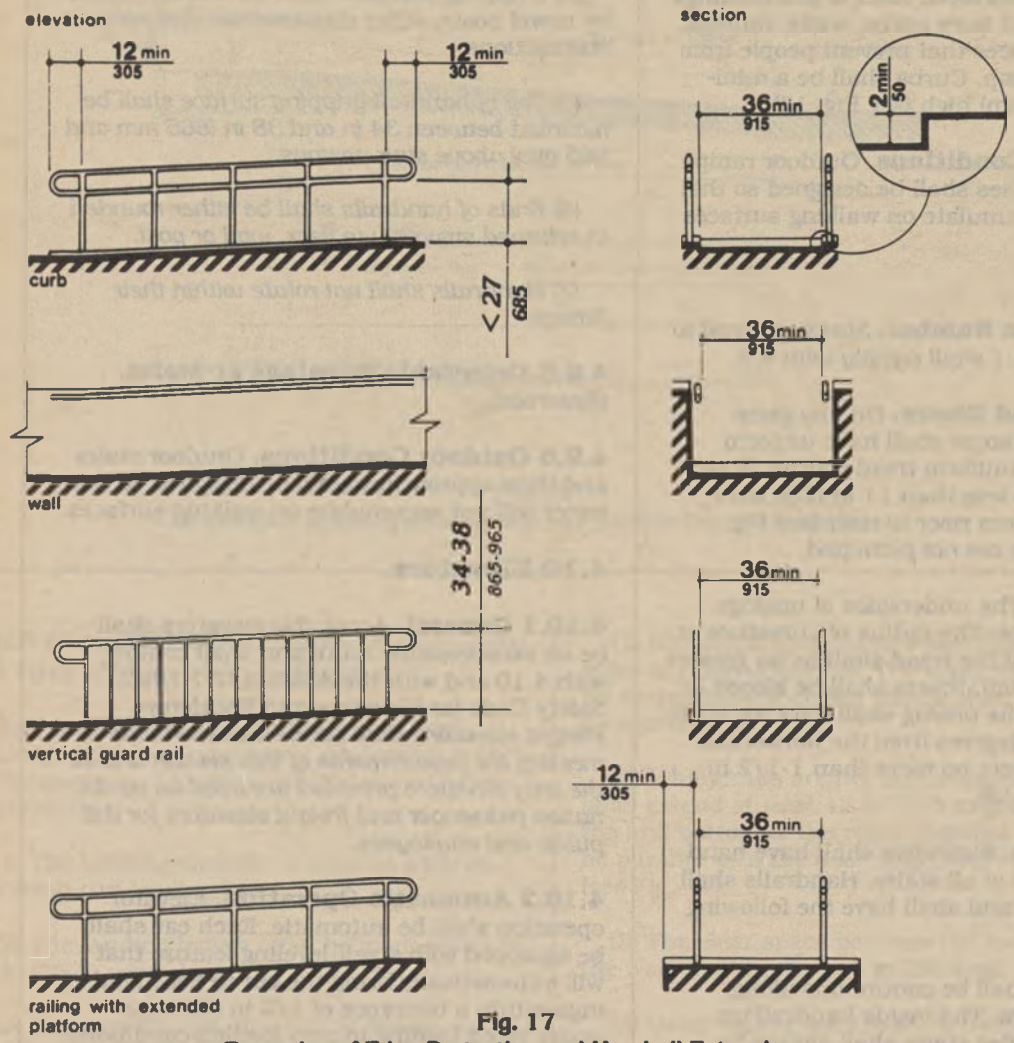

Fig. 17
Examples of Edge Protection and Handrail Extensions

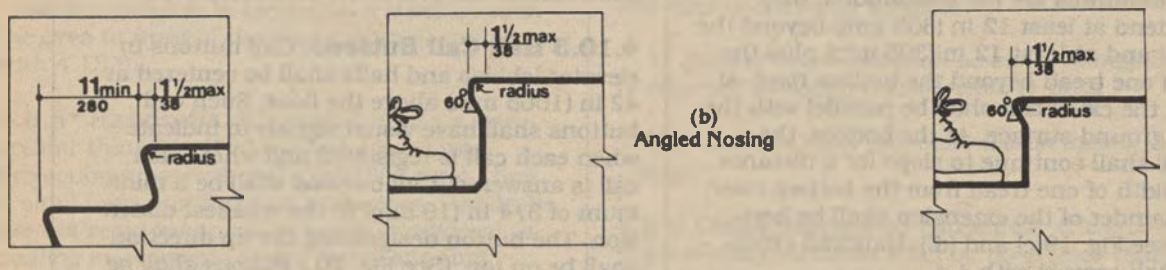

(a)
Flush Riser

(b)
Angled Nosing

(c)
Rounded Nosing

Fig. 18
Usable Tread Width and Examples of Acceptable Nosings

4.10 Elevators

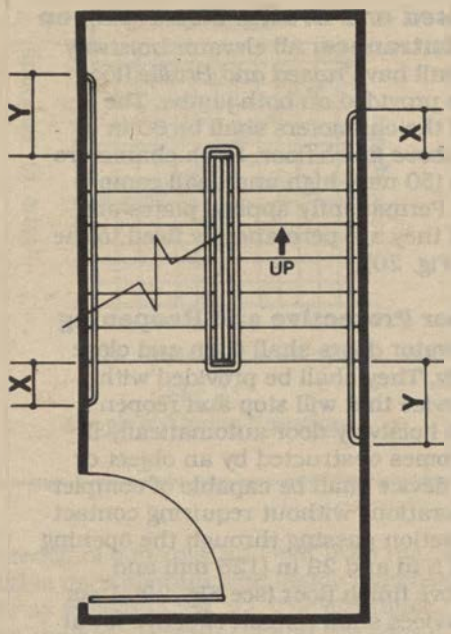

(a)
Plan

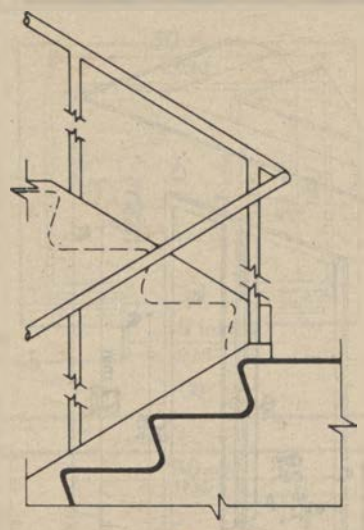

(b)
Elevation of Center Handrail

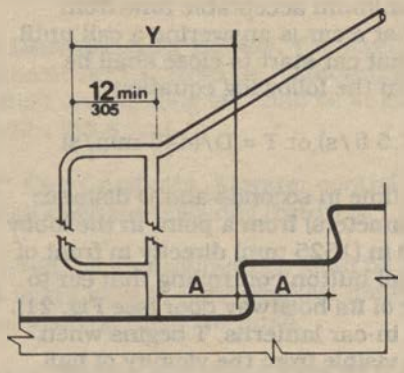

(c)
Extension at Bottom of Run

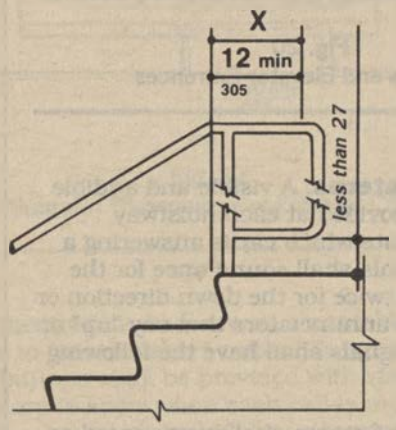

(d)
Extension at Top of Run

NOTE:

X is the 12 in minimum handrail extension required at each top riser.

Y is the minimum handrail extension of 12 in plus the width of one tread that is required at each bottom riser.

Fig. 19
Stair Handrails

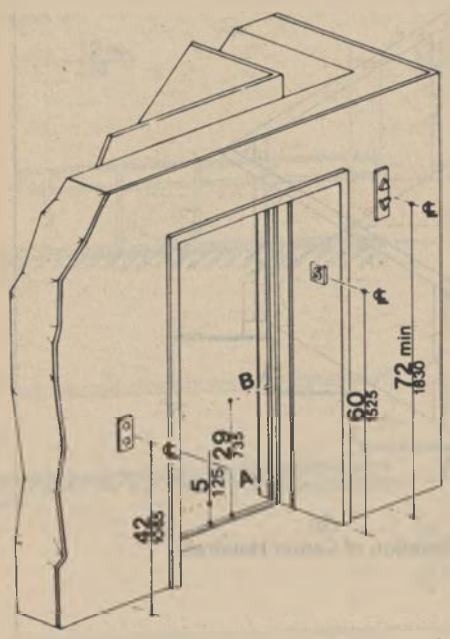

NOTE: The automatic door reopening device is activated if an object passes through either line A or line B. Line A and line B represent the vertical locations of the door reopening device not requiring contact.

Fig. 20
Hoistway and Elevator Entrances

4.10.4 Hall Lanterns. A visible and audible signal shall be provided at each hoistway entrance to indicate which car is answering a call. Audible signals shall sound once for the up direction and twice for the down direction or shall have verbal annunciators that say "up" or "down." Visible signals shall have the following features:

(1) Hall lantern fixtures shall be mounted so that their centerline is at least 72 in (1830 mm) above the lobby floor. (See Fig. 20.)

(2) Visual elements shall be at least 2-1/2 in (64 mm) in the smallest dimension.

(3) Signals shall be visible from the vicinity of the hall call button (see Fig. 20). In-car lanterns located in cars, visible from the vicinity of hall call buttons, and conforming to the above requirements, shall be acceptable.

4.10.5 *Raised and Braille* Characters on Hoistway Entrances. All elevator hoistway entrances shall have *raised and Braille* floor designations provided on both jambs. The centerline of the characters shall be 60 in (1525 mm) *above finish* floor. Such characters shall be 2 in (50 mm) high and shall comply with 4.30.4. Permanently applied plates are acceptable if they are permanently fixed to the jambs. (See Fig. 20).

4.10.6* Door Protective and Reopening Device. Elevator doors shall open and close automatically. They shall be provided with a reopening device that will stop and reopen a car door and hoistway door automatically if the door becomes obstructed by an object or person. The device shall be capable of completing these operations without requiring contact for an obstruction passing through the opening at heights of 5 in and 29 in (125 mm and 735 mm) above finish floor (see Fig. 20). Door reopening devices shall remain effective for at least 20 seconds. After such an interval, doors may close in accordance with the requirements of *ASME A17.1-1990.*

4.10.7* Door and Signal Timing for Hall Calls. The minimum acceptable time from notification that a car is answering a call until the doors of that car start to close shall be calculated from the following equation:

$$T = D/(1.5\ ft/s) \text{ or } T = D/(445\ mm/s)$$

where T total time in seconds and D distance (in feet or millimeters) from a point in the lobby or corridor 60 in (1525 mm) directly in front of the farthest call button controlling that car to the centerline of its hoistway door (see Fig. 21). For cars with in-car lanterns, T begins when the lantern is visible from the vicinity of hall call buttons and an audible signal is sounded. *The minimum acceptable notification time shall be 5 seconds.*

4.10.8 Door Delay for Car Calls. The minimum time for elevator doors to remain fully open in response to a car call shall be 3 seconds.

4.10.9 Floor Plan of Elevator Cars. The floor area of elevator cars shall provide space for wheelchair users to enter the car, maneuver

4.10.12 Car Controls

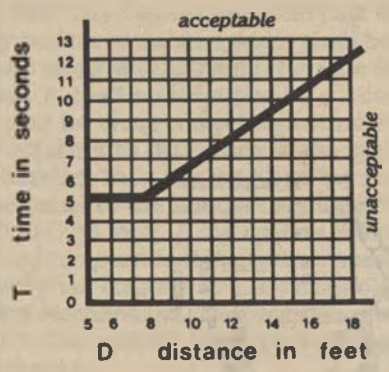

Fig. 21
Graph of Timing Equation

within reach of controls, and exit from the car. Acceptable door opening and inside dimensions shall be as shown in Fig. 22. The clearance between the car platform sill and the edge of any hoistway landing shall be no greater than 1-1/4 in (32 mm).

4.10.10 Floor Surfaces. Floor surfaces shall comply with 4.5.

4.10.11 Illumination Levels. The level of illumination at the car controls, platform, and car threshold and landing sill shall be at least 5 footcandles (53.8 lux).

4.10.12* Car Controls. Elevator control panels shall have the following features:

(1) Buttons. All control buttons shall be at least 3/4 in (19 mm) in their smallest dimension. They *shall* be *raised* or flush.

(2) Tactile, *Braille*, and Visual Control Indicators. All control buttons shall be designated by *Braille and by raised* standard alphabet characters for letters, arabic characters for numerals, or standard symbols as shown in Fig. 23(a), and as required in *ASME A17.1-1990. Raised and Braille* characters and symbols shall comply with 4.30. The call button for the main entry floor shall be designated by a *raised* star at the left of the floor designation (see Fig. 23(a)). All raised designations for control buttons shall be placed immediately to the left of the button to which they apply. Applied plates,

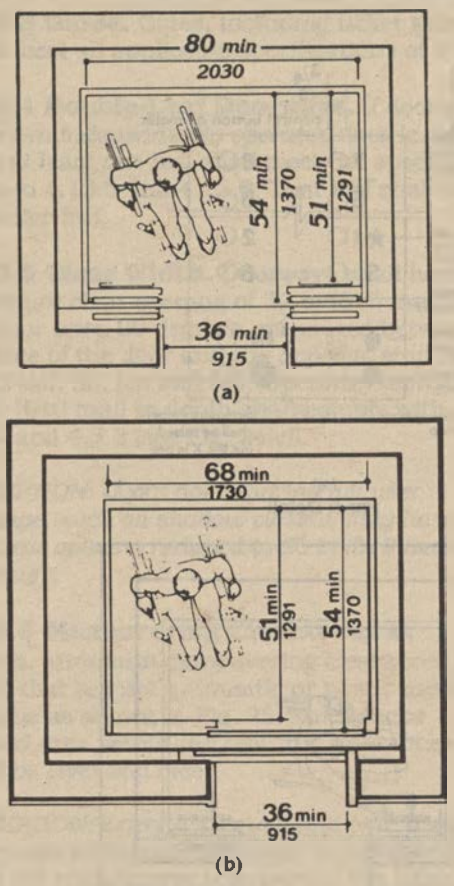

Fig. 22
Minimum Dimensions of Elevator Cars

permanently attached, are an acceptable means to provide raised control designations. Floor buttons shall be provided with visual indicators to show when each call is registered. The visual indicators shall be extinguished when each call is answered.

(3) Height. All floor buttons shall be no higher than 54 in (1370 mm) above the *finish* floor *for side approach and 48 in (1220 mm) for front approach.* Emergency controls, including the emergency alarm and emergency stop, shall be grouped at the bottom of the panel and shall have their centerlines no less than 35 in (890 mm) above the finish floor (see Fig. 23(a) and (b)).

4.10.13* Car Position Indicators

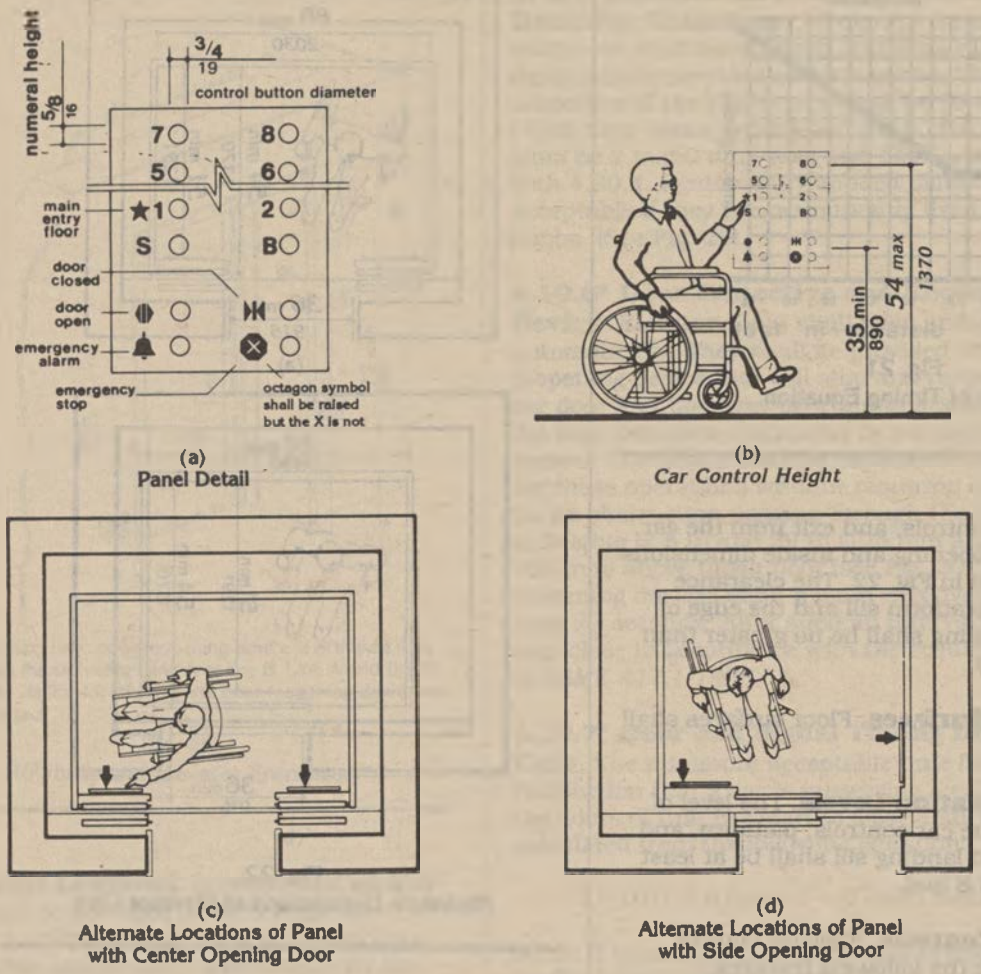

(a)
Panel Detail

(b)
Car Control Height

(c)
Alternate Locations of Panel with Center Opening Door

(d)
Alternate Locations of Panel with Side Opening Door

Fig. 23
Car Controls

(4) Location. Controls shall be located on a front wall if cars have center opening doors, and at the side wall or at the front wall next to the door if cars have side opening doors (see Fig. 23(c) and (d)).

4.10.13* Car Position Indicators. In elevator cars, a visual car position indicator shall be provided above the car control panel or over the door to show the position of the elevator in the hoistway. As the car passes or stops at a floor served by the elevators, the corresponding numerals shall illuminate, and an audible signal shall sound. Numerals shall be a minimum of 1/2 in (13 mm) high. The audible signal shall be no less than 20 decibels with a frequency no higher than 1500 Hz. An automatic verbal announcement of the floor number at which a car stops or which a car passes may be substituted for the audible signal.

4.10.14* Emergency Communications. If provided, emergency two-way communication systems between the elevator and a point outside the hoistway shall comply with *ASME*

A17.1-1990. The highest operable part of a two-way communication system shall be a maximum of *48 in (1220 mm)* from the floor of the car. It shall be identified by a raised symbol and lettering complying with 4.30 and located adjacent to the device. If the system uses a handset then the length of the cord from the panel to the handset shall be at least 29 in (735 mm). *If the system is located in a closed compartment the compartment door hardware shall conform to 4.27, Controls and Operating Mechanisms. The emergency intercommunication system shall not require voice communication.*

4.11 Platform Lifts *(Wheelchair Lifts).*

4.11.1 Location. *Platform lifts (wheelchair lifts) permitted by 4.1 shall comply with the requirements of 4.11.*

4.11.2* Other Requirements. If platform lifts *(wheelchair lifts)* are used, they shall comply with 4.2.4, 4.5, 4.27, and *ASME A17.1 Safety Code for Elevators and Escalators, Section XX, 1990.*

4.11.3 Entrance. *If platform lifts are used then they shall facilitate unassisted entry, operation, and exit from the lift in compliance with 4.11.2.*

4.12 Windows.

4.12.1* General. *(Reserved).*

4.12.2* Window Hardware. *(Reserved).*

4.13 Doors.

4.13.1 General. *Doors required to be accessible by 4.1* shall comply with the requirements of 4.13.

4.13.2 Revolving Doors and Turnstiles. Revolving doors or turnstiles shall not be the only means of passage at an accessible entrance or along an accessible route. *An accessible gate or door shall be provided adjacent to the turnstile or revolving door and shall be so designed as to facilitate the same use pattern.*

4.13.3 Gates. Gates, including ticket gates, shall meet all applicable specifications of 4.13.

4.13.4 Double-Leaf Doorways. If doorways have two *independently operated* door leaves, then at least one leaf shall meet the specifications in 4.13.5 and 4.13.6. That leaf shall be an active leaf.

4.13.5 Clear Width. Doorways shall have a minimum clear opening of 32 in (815 mm) with the door open 90 degrees, measured between the face of the door and the *opposite* stop (see Fig. 24(a), (b), (c), and (d)). Openings more than 24 in (610 mm) in depth shall comply with 4.2.1 and 4.3.3 (see Fig. 24(e)).

EXCEPTION: Doors not requiring full user passage, such as shallow closets, may have the clear opening reduced to 20 in (510 mm) minimum.

4.13.6 Maneuvering Clearances at Doors. Minimum maneuvering clearances at doors that are not automatic or power-assisted shall be as shown in Fig. 25. The floor or ground area within the required clearances shall be level and clear.

EXCEPTION: Entry doors to acute care hospital bedrooms for in-patients shall be exempted from the requirement for space at the latch side of the door (see dimension "x" in Fig. 25) if the door is at least 44 in (1120 mm) wide.

4.13.7 Two Doors in Series. The minimum space between two hinged or pivoted doors in series shall be 48 in (1220 mm) plus the width of any door swinging into the space. Doors in series shall swing either in the same direction or away from the space between the doors (see Fig. 26).

4.13.8* Thresholds at Doorways. Thresholds at doorways shall not exceed 3/4 in (19 mm) in height for exterior sliding doors or 1/2 in (13 mm) for other types of doors. Raised thresholds and floor level changes at accessible doorways shall be beveled with a slope no greater than 1:2 (see 4.5.2).

4.13.9* Door Hardware. Handles, pulls, latches, locks, and other operating devices on accessible doors shall have a shape that is easy

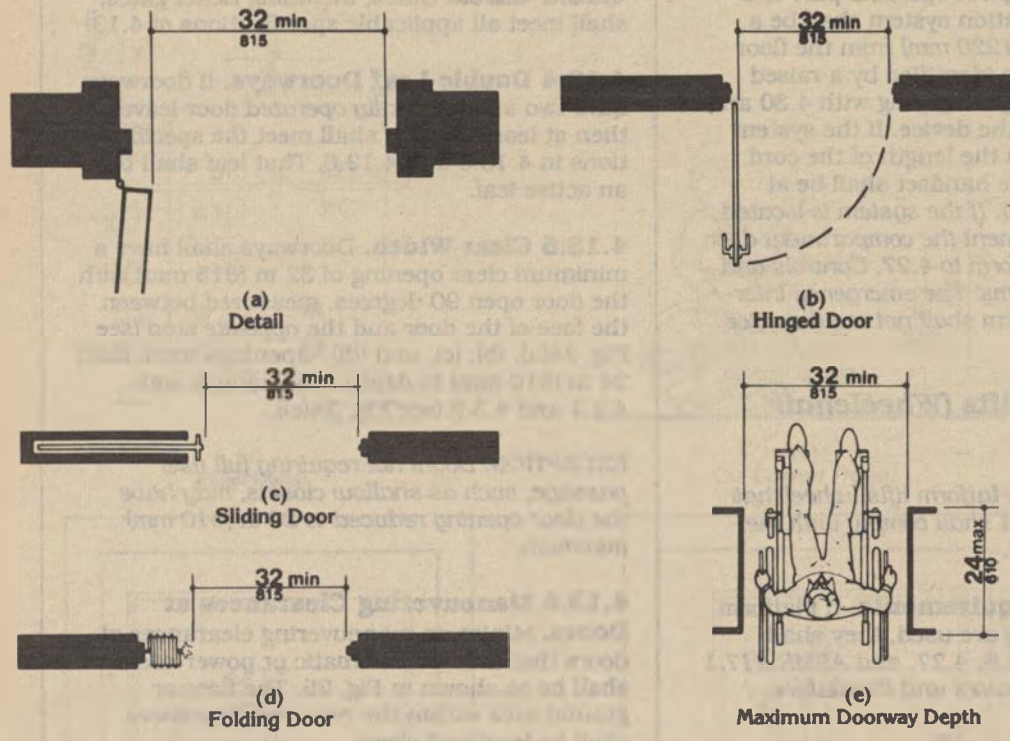

Fig. 24
Clear Doorway Width and Depth

to grasp with one hand and does not require tight grasping, tight pinching, or twisting of the wrist to operate. Lever-operated mechanisms, push-type mechanisms, and U-shaped handles are acceptable designs. When sliding doors are fully open, operating hardware shall be exposed and usable from both sides. *Hardware required for accessible door passage shall be mounted no higher than 48 in (1220 mm) above finished floor.*

4.13.10* Door Closers. If a door has a closer, then the sweep period of the closer shall be adjusted so that from an open position of 70 degrees, the door will take at least 3 seconds to move to a point 3 in (75 mm) from the latch, measured to the leading edge of the door.

4.13.11* Door Opening Force. The maximum force for pushing or pulling open a door shall be as follows:

(1) Fire doors shall have the minimum opening force allowable by the appropriate administrative authority.

(2) Other doors.

(a) exterior hinged doors: *(Reserved).*

(b) interior hinged doors: 5 lbf (22.2N)

(c) sliding or folding doors: 5 lbf (22.2N)

These forces do not apply to the force required to retract latch bolts or disengage other devices that may hold the door in a closed position.

4.13 Doors

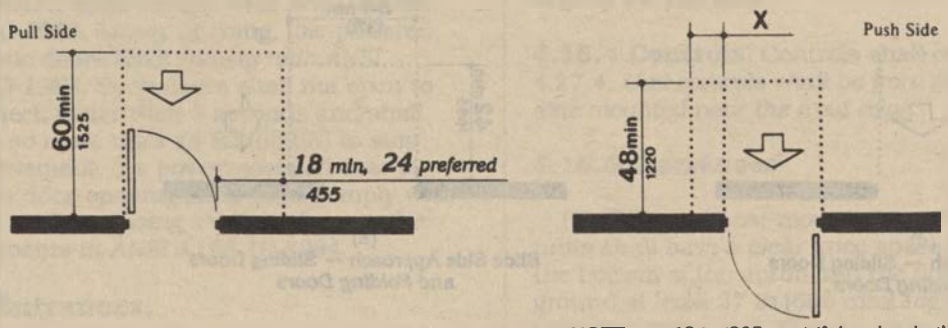

NOTE: x = 12 in (305 mm) if door has both a closer and latch.

(a)
Front Approaches — Swinging Doors

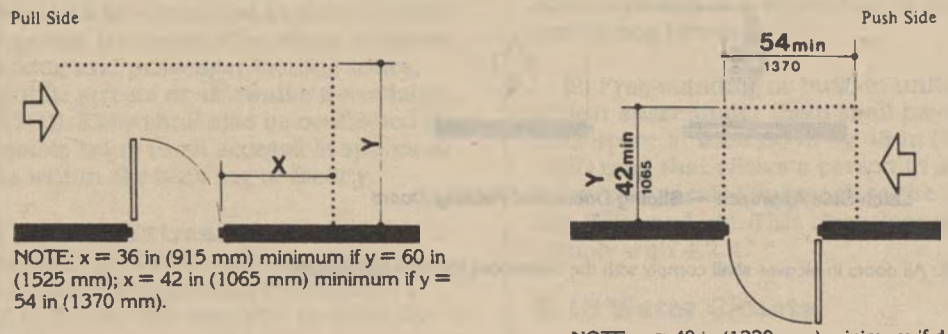

NOTE: x = 36 in (915 mm) minimum if y = 60 in (1525 mm); x = 42 in (1065 mm) minimum if y = 54 in (1370 mm).

NOTE: y = 48 in (1220 mm) minimum if door has both a latch and closer.

(b)
Hinge Side Approaches — Swinging Doors

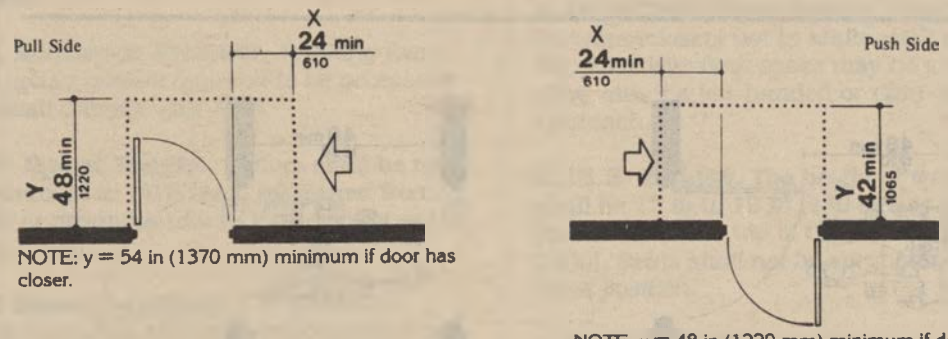

NOTE: y = 54 in (1370 mm) minimum if door has closer.

NOTE: y = 48 in (1220 mm) minimum if door has closer.

(c)
Latch Side Approaches — Swinging Doors

NOTE: All doors in alcoves shall comply with the clearances for front approaches.

Fig. 25
Maneuvering Clearances at Doors

4.13 Doors

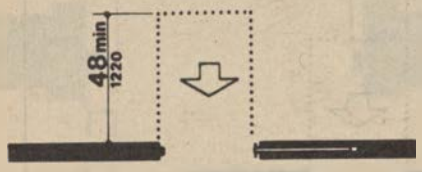

(d)
Front Approach — Sliding Doors *and Folding Doors*

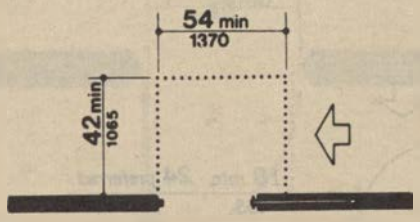

(e)
Slide Side Approach — Sliding Doors *and Folding Doors*

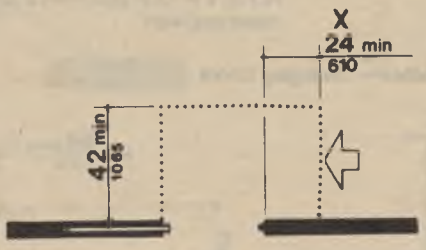

(f)
Latch Side Approach — Sliding Doors *and Folding Doors*

NOTE: All doors in alcoves shall comply with the clearances for front approaches.

Fig. 25
Maneuvering Clearances at Doors *(Continued)*

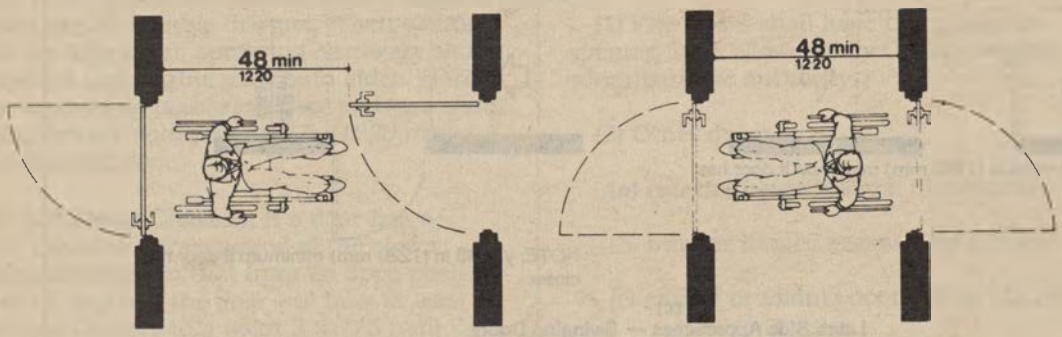

Fig. 26
Two Hinged Doors in Series

4.14 Entrances

4.13.12* Automatic Doors and Power-Assisted Doors. If an automatic door is used, then it shall comply with *ANSI/BHMA A156.10-1985*. Slowly opening, low-powered, automatic doors shall *comply with ANSI A156.19-1984*. Such doors shall not open to back check faster than 3 seconds and shall require no more than 15 lbf (66.6N) to stop door movement. If a power-assisted door is used, its door-opening force shall comply with 4.13.11 and its closing shall conform to the requirements in *ANSI A156.19-1984*.

4.14 Entrances.

4.14.1 Minimum Number. *Entrances required to be accessible by 4.1* shall be part of an accessible route complying with 4.3. Such entrances shall be connected by an accessible route to public transportation stops, to accessible parking and passenger loading zones, and to public streets or sidewalks if available (see 4.3.2(1)). They shall also be connected by an accessible route to all accessible spaces or elements within the building or facility.

4.14.2 Service Entrances. A service entrance shall not be the sole accessible entrance unless it is the only entrance to a building or facility (for example, in a factory or garage).

4.15 Drinking Fountains and Water Coolers.

4.15.1 Minimum Number. *Drinking fountains or water coolers required to be accessible by 4.1* shall comply with 4.15.

4.15.2* Spout Height. Spouts shall be no higher than 36 in (915 mm), measured from the floor or ground surfaces to the spout outlet (see Fig. 27(a)).

4.15.3 Spout Location. The spouts of drinking fountains and water coolers shall be at the front of the unit and shall direct the water flow in a trajectory that is parallel or nearly parallel to the front of the unit. The spout shall provide a flow of water at least 4 in (100 mm) high so as to allow the insertion of a cup or glass under the flow of water. *On an accessible drinking fountain with a round or oval bowl, the spout must be positioned so the flow of water is within 3 in (75 mm) of the front edge of the fountain.*

4.15.4 Controls. Controls shall comply with 4.27.4. *Unit controls shall be front mounted or side mounted near the front edge.*

4.15.5 Clearances.

(1) Wall- and post-mounted cantilevered units shall have a clear knee space between the bottom of the apron and the floor or ground at least 27 in (685 mm) high, 30 in (760 mm) wide, and 17 in to 19 in (430 mm to 485 mm) deep (see Fig. 27(a) and (b)). Such units shall also have a minimum clear floor space 30 in by 48 in (760 mm by 1220 mm) to allow a person in a wheelchair to approach the unit facing forward.

(2) Free-standing or built-in units not having a clear space under them shall have a clear floor space at least 30 in by 48 in (760 mm by 1220 mm) that allows a person in a wheelchair to make a parallel approach to the unit (see Fig. 27(c) and (d)). This clear floor space shall comply with 4.2.4.

4.16 Water Closets.

4.16.1 General. Accessible water closets shall comply with 4.16.

4.16.2 Clear Floor Space. Clear floor space for water closets not in stalls shall comply with Fig. 28. Clear floor space may be arranged to allow either a left-handed or right-handed approach.

4.16.3* Height. The height of water closets shall be 17 in to 19 in (430 mm to 485 mm), measured to the top of the toilet seat (see Fig. 29(b)). *Seats shall not be sprung to return to a lifted position.*

4.16.4* Grab Bars. Grab bars for water closets not located in stalls shall comply with 4.26 and Fig. 29. *The grab bar behind the water closet shall be 36 in (915 mm) minimum.*

4.16.5* Flush Controls. Flush controls shall be hand operated *or automatic* and shall comply with 4.27.4. Controls for flush valves

shall be mounted on the wide side of toilet areas no more than 44 in (1120 mm) above the floor.

4.16.6 Dispensers. Toilet paper dispensers shall be installed within reach, as shown in Fig. 29(b). *Dispensers that control delivery, or that do not permit continuous paper flow, shall not be used.*

4.17 Toilet Stalls.

4.17.1 Location. Accessible toilet stalls shall be on an accessible route and shall meet the requirements of 4.17.

4.17.2 Water Closets. Water closets in accessible stalls shall comply with 4.16.

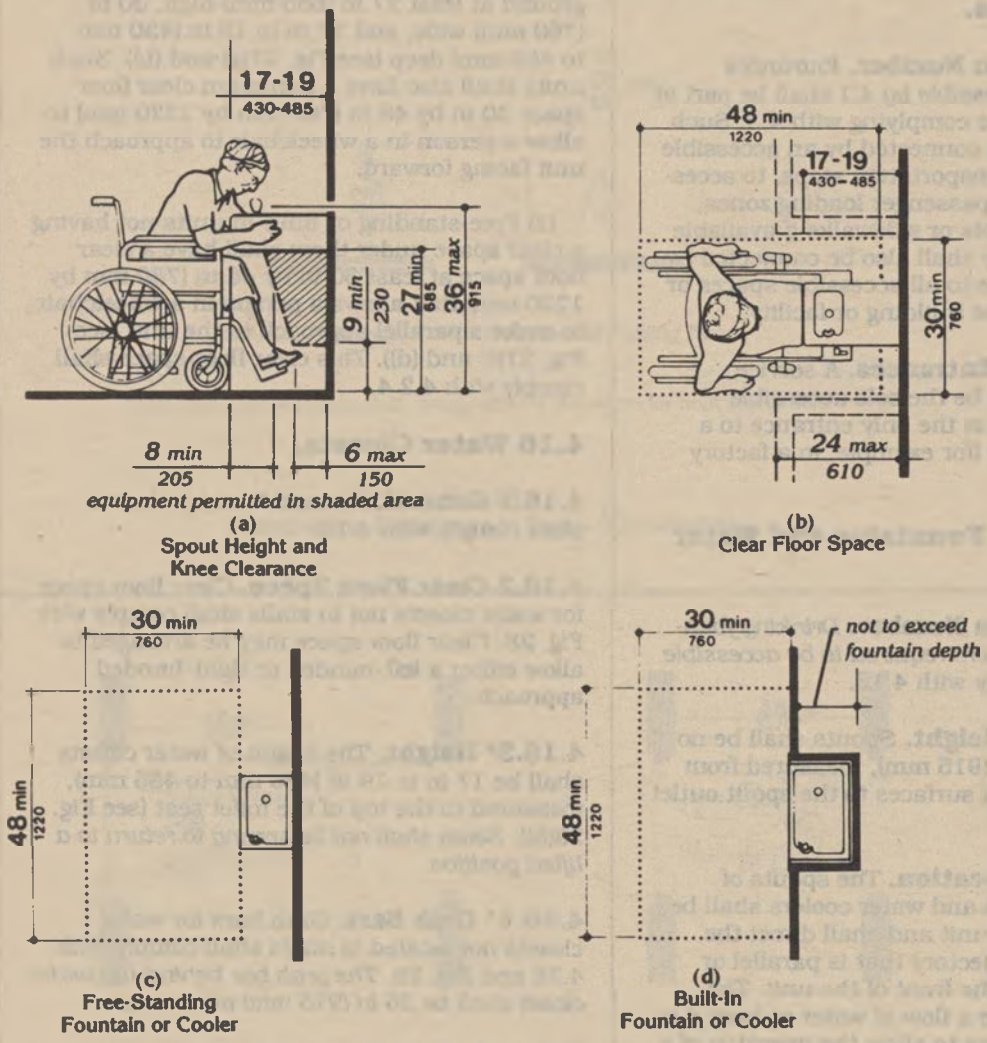

Fig. 27
Drinking Fountains and Water Coolers

4.17 Toilet Stalls

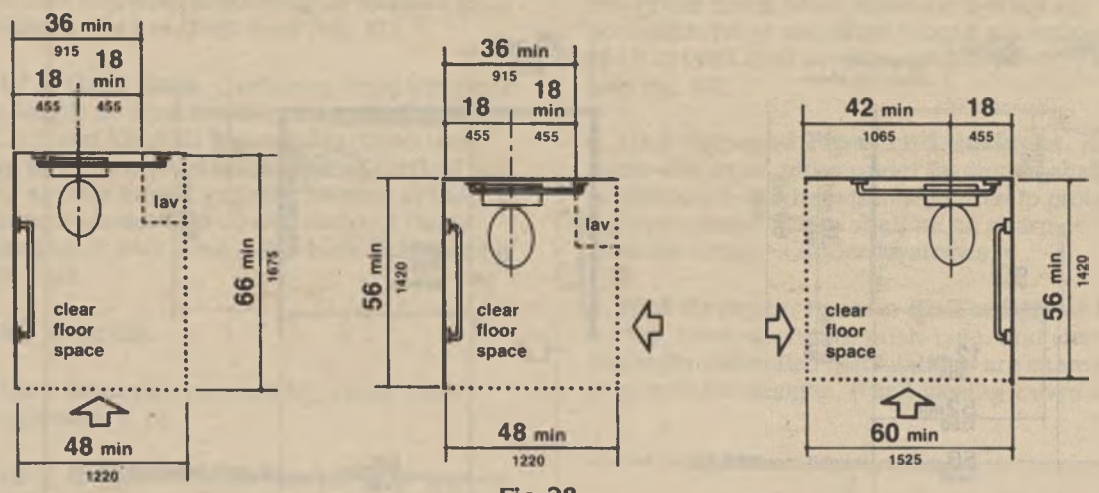

Fig. 28
Clear Floor Space at Water Closets

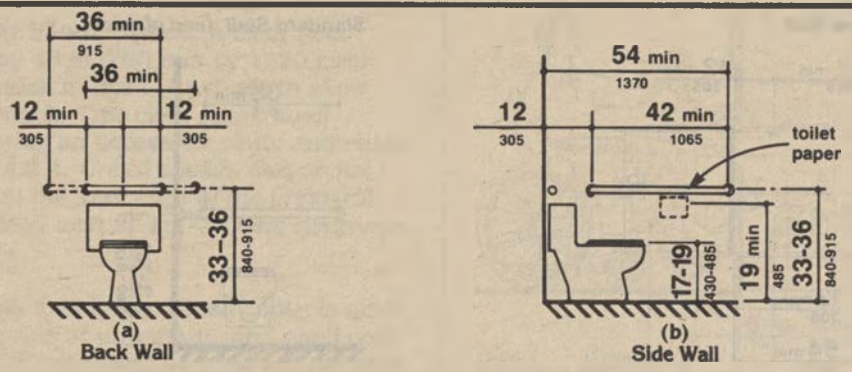

Fig. 29
Grab Bars at Water Closets

4.17.3* Size and Arrangement. The size and arrangement of the standard toilet stall shall comply with Fig. 30(a), *Standard Stall.* Standard toilet stalls with a minimum depth of 56 in (1420 mm) (see Fig. 30(a)) shall have wall-mounted water closets. If the depth of a standard toilet stall is increased at least 3 in (75 mm), then a floor-mounted water closet may be used. Arrangements shown for standard toilet stalls may be reversed to allow either a left- or right-hand approach. Additional stalls shall be provided in conformance with 4.22.4.

EXCEPTION: In instances of alteration work where provision of a standard stall (Fig. 30(a)) is technically infeasible or where plumbing code requirements prevent combining existing stalls to provide space, either alternate stall (Fig. 30(b)) may be provided in lieu of the standard stall.

4.17.4 Toe Clearances. In standard stalls, the front partition and at least one side partition shall provide a toe clearance of at least 9 in (230 mm) above the floor. If the depth of the stall is greater than 60 in (1525 mm), then the toe clearance is not required.

4.17.5* Doors. Toilet stall doors, *including door hardware,* shall comply with 4.13. *If toilet stall approach is from the latch side of the stall door, clearance between the door side of the*

4.17 Toilet Stalls

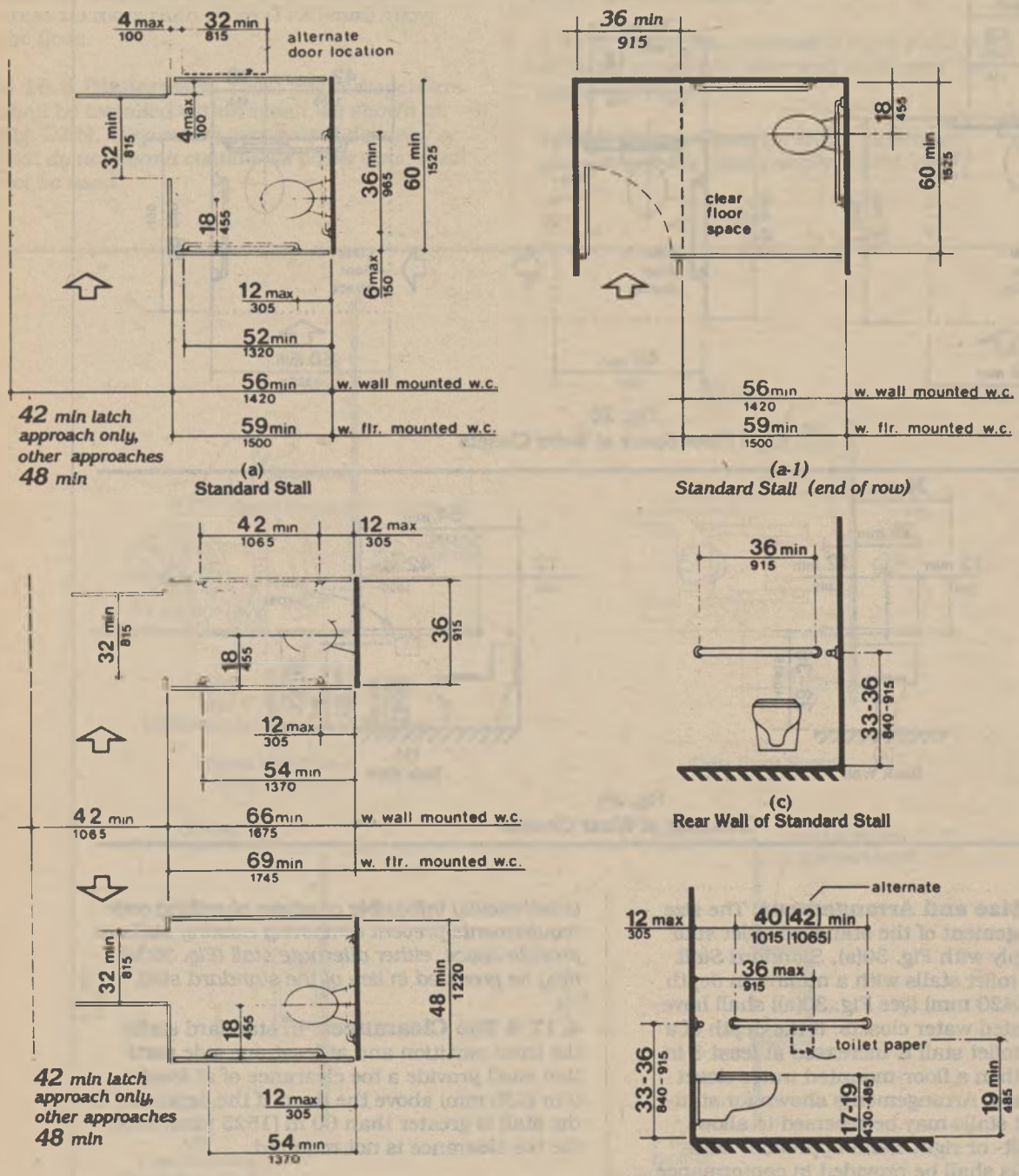

Fig. 30
Toilet Stalls

4.19 Lavatories and Mirrors

stall and any obstruction may be reduced to a minimum of 42 in (1065 mm) (Fig. 30).

4.17.6 Grab Bars. Grab bars complying with the length and positioning shown in Fig. 30(a), (b), (c), and (d) shall be provided. Grab bars may be mounted with any desired method as long as they have a gripping surface at the locations shown and do not obstruct the required clear floor area. Grab bars shall comply with 4.26.

4.18 Urinals.

4.18.1 General. Accessible urinals shall comply with 4.18.

4.18.2 Height. Urinals shall be stall-type or wall-hung with an elongated rim at a maximum of 17 in (430 mm) above the finish floor.

4.18.3 Clear Floor Space. A clear floor space 30 in by 48 in (760 mm by 1220 mm) shall be provided in front of urinals to allow forward approach. This clear space shall adjoin or overlap an accessible route and shall comply with 4.2.4. *Urinal shields that do not extend beyond the front edge of the urinal rim may be provided with 29 in (735 mm) clearance between them.*

4.18.4 Flush Controls. Flush controls shall be hand operated or automatic, and shall comply with 4.27.4, and shall be mounted no more than 44 in (1120 mm) above the finish floor.

4.19 Lavatories and Mirrors.

4.19.1 General. The requirements of 4.19 shall apply to lavatory fixtures, vanities, and built-in lavatories.

4.19.2 Height and Clearances. Lavatories shall be mounted with *the rim or counter surface no higher than 34 in (865 mm) above the finish floor.* Provide a clearance of at least 29 in (735 mm) above the finish floor to the bottom of the apron. Knee and toe clearance shall comply with Fig. 31.

4.19.3 Clear Floor Space. A clear floor space 30 in by 48 in (760 mm by 1220 mm) complying with 4.2.4 shall be provided in front of a lavatory to allow forward approach. Such clear floor space shall adjoin or overlap an accessible route and shall extend a maximum of 19 in (485 mm) underneath the lavatory (see Fig. 32).

4.19.4 Exposed Pipes and Surfaces. Hot water and drain pipes under lavatories shall be insulated or otherwise *configured to protect against contact.* There shall be no sharp or abrasive surfaces under lavatories.

4.19.5 Faucets. Faucets shall comply with 4.27.4. Lever-operated, push-type, and electronically controlled mechanisms are examples of acceptable designs. *If* self-closing valves are

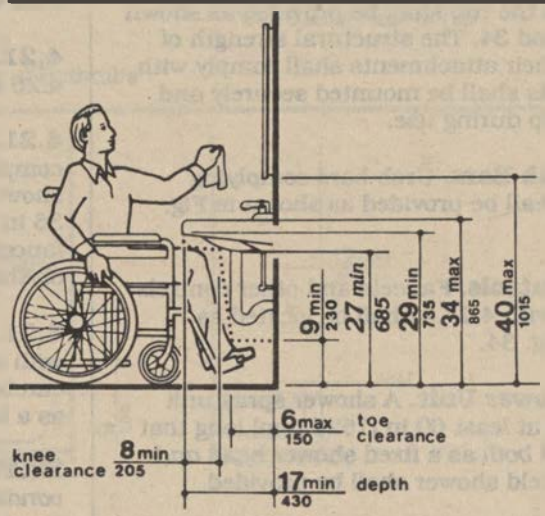

Fig. 31
Lavatory Clearances

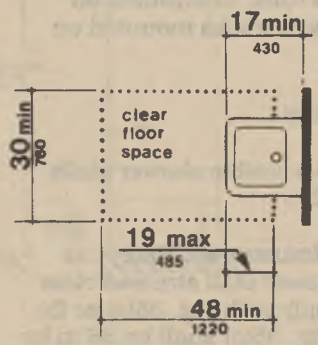

Fig. 32
Clear Floor Space at Lavatories

used the faucet *shall remain* open for at least 10 seconds.

4.19.6* Mirrors. Mirrors shall be mounted with the bottom edge *of the reflecting surface* no higher than 40 in (1015 mm) *above the finish* floor (see Fig. 31).

4.20 Bathtubs.

4.20.1 General. Accessible bathtubs shall comply with 4.20.

4.20.2 Floor Space. Clear floor space in front of bathtubs shall be as shown in Fig. 33.

4.20.3 Seat. An in-tub seat or a seat at the head end of the tub shall be provided as shown in Fig. 33 and 34. The structural strength of seats and their attachments shall comply with 4.26.3. Seats shall be mounted securely and shall not slip during use.

4.20.4 Grab Bars. Grab bars complying with 4.26 shall be provided as shown in Fig. 33 and 34.

4.20.5 Controls. Faucets and other controls complying with 4.27.4 shall be located as shown in Fig. 34.

4.20.6 Shower Unit. A shower spray unit with a hose at least 60 in (1525 mm) long that can be used *both* as a fixed shower head *and* as a hand-held shower shall be provided.

4.20.7 Bathtub Enclosures. If provided, enclosures for bathtubs shall not obstruct controls or transfer from wheelchairs onto bathtub seats or into tubs. Enclosures on bathtubs shall not have tracks mounted on their rims.

4.21 Shower Stalls.

4.21.1* General. Accessible shower stalls shall comply with 4.21.

4.21.2 Size and Clearances. Except as specified in 9.1.2, shower stall size and clear floor space shall comply with Fig. 35(a) or (b). The shower stall in Fig. 35(a) shall be 36 in by 36 in (915 mm by 915 mm). Shower stalls required by 9.1.2 shall comply with Fig. 57(a) or (b). The shower stall in Fig. 35(b) will fit into the space required for a bathtub.

4.21.3 Seat. A seat shall be provided in shower stalls 36 in by 36 in (915 mm by 915 mm) and shall be as shown in Fig. 36. The seat shall be mounted 17 in to 19 in (430 mm to 485 mm) from the bathroom floor and shall extend the full depth of the stall. In a 36 in by 36 in (915 mm by 915 mm) shower stall, the seat shall be on the wall opposite the controls. *Where a fixed seat is provided in a 30 in by 60 in minimum (760 mm by 1525 mm) shower stall, it shall be a folding type and shall be mounted on the wall adjacent to the controls as shown in Fig. 57.* The structural strength of seats and their attachments shall comply with 4.26.3.

4.21.4 Grab Bars. Grab bars complying with 4.26 shall be provided as shown in Fig. 37.

4.21.5 Controls. Faucets and other controls complying with 4.27.4 shall be located as shown in Fig. 37. In shower stalls 36 in by 36 in (915 mm by 915 mm), all controls, faucets, and the shower unit shall be mounted on the side wall opposite the seat.

4.21.6 Shower Unit. A shower spray unit with a hose at least 60 in (1525 mm) long that can be used *both* as a fixed shower head *and* as a hand-held shower shall be provided.

EXCEPTION: In unmonitored facilities where vandalism is a consideration, a fixed shower head mounted at 48 in (1220 mm) above the shower floor may be used in lieu of a hand-held shower head.

4.21.7 Curbs. If provided, curbs in shower stalls 36 in by 36 in (915 mm by 915 mm) shall be no higher than *1/2 in (13 mm)*. Shower stalls that are 30 in by 60 in (760 mm by 1525 mm) minimum shall not have curbs.

4.21.8 Shower Enclosures. If provided, enclosures for shower stalls shall not obstruct controls or obstruct transfer from wheelchairs onto shower seats.

4.22 Toilet Rooms.

4.22.1 Minimum Number. *Toilet facilities required to be accessible by 4.1 shall comply*

4.21 Shower Stalls

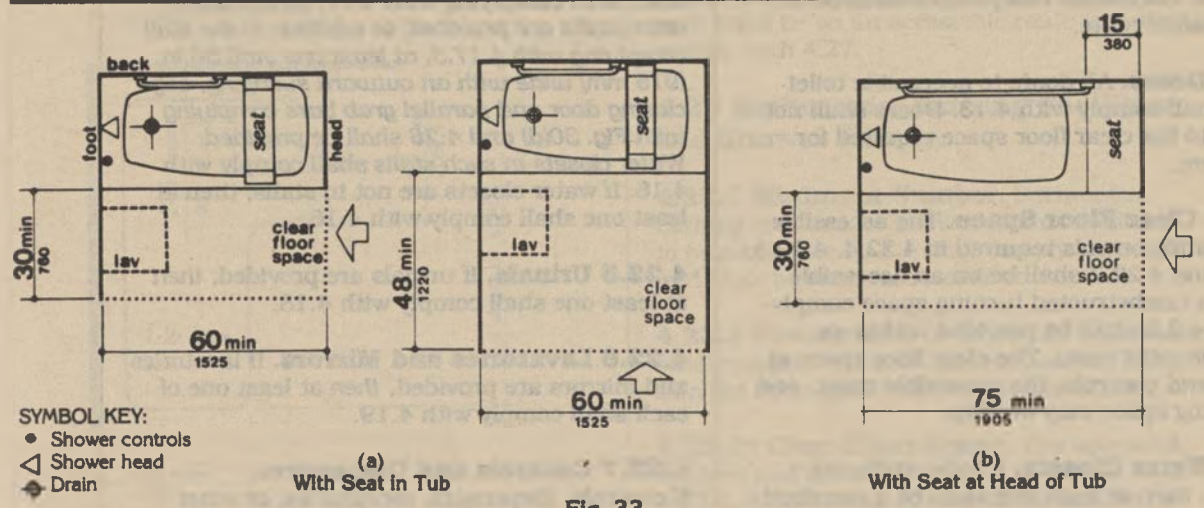

(a)
With Seat in Tub

(b)
With Seat at Head of Tub

Fig. 33
Clear Floor Space at Bathtubs

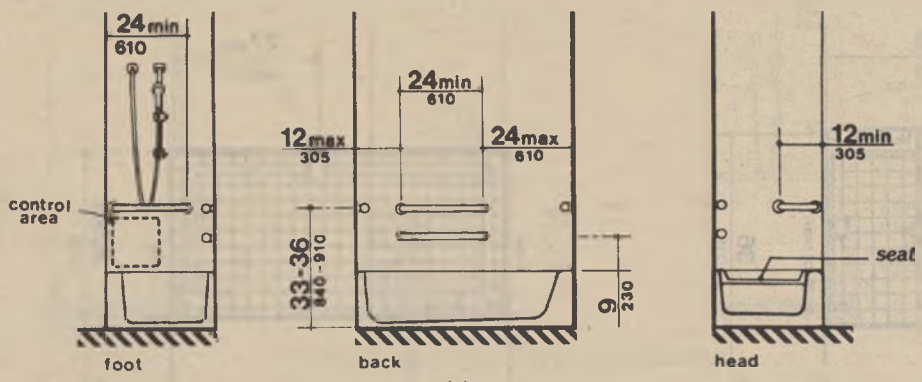

(a)
With Seat in Tub

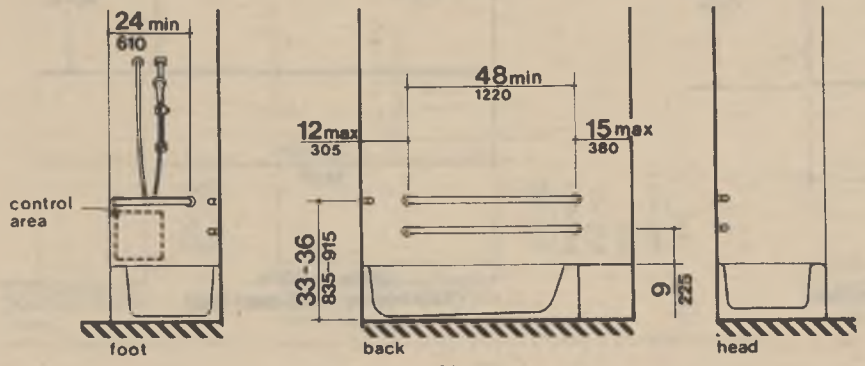

(b)
With Seat at Head of Tub

Fig. 34
Grab Bars at Bathtubs

with 4.22. Accessible toilet rooms shall be on an accessible route.

4.22.2 Doors. All doors to accessible toilet rooms shall comply with 4.13. Doors shall not swing into the clear floor space required for any fixture.

4.22.3* Clear Floor Space. The accessible fixtures and controls required in 4.22.4, 4.22.5, 4.22.6, and 4.22.7 shall be on an accessible route. An unobstructed turning space complying with 4.2.3 shall be provided within an accessible toilet room. The clear floor space at fixtures and controls, the accessible route, and the turning space may overlap.

4.22.4 Water Closets. If toilet stalls are provided, then at least one shall be a standard toilet stall complying with 4.17; *where 6 or more stalls are provided, in addition to the stall complying with 4.17.3, at least one stall 36 in (915 mm) wide with an outward swinging, self-closing door and parallel grab bars complying with Fig. 30(d) and 4.26 shall be provided. Water closets in such stalls* shall comply with 4.16. If water closets are not in stalls, then at least one shall comply with 4.16.

4.22.5 Urinals. If urinals are provided, *then* at least one shall comply with 4.18.

4.22.6 Lavatories and Mirrors. If lavatories and mirrors are provided, *then* at least one of each shall comply with 4.19.

4.22.7 Controls and Dispensers. If controls, dispensers, receptacles, or other

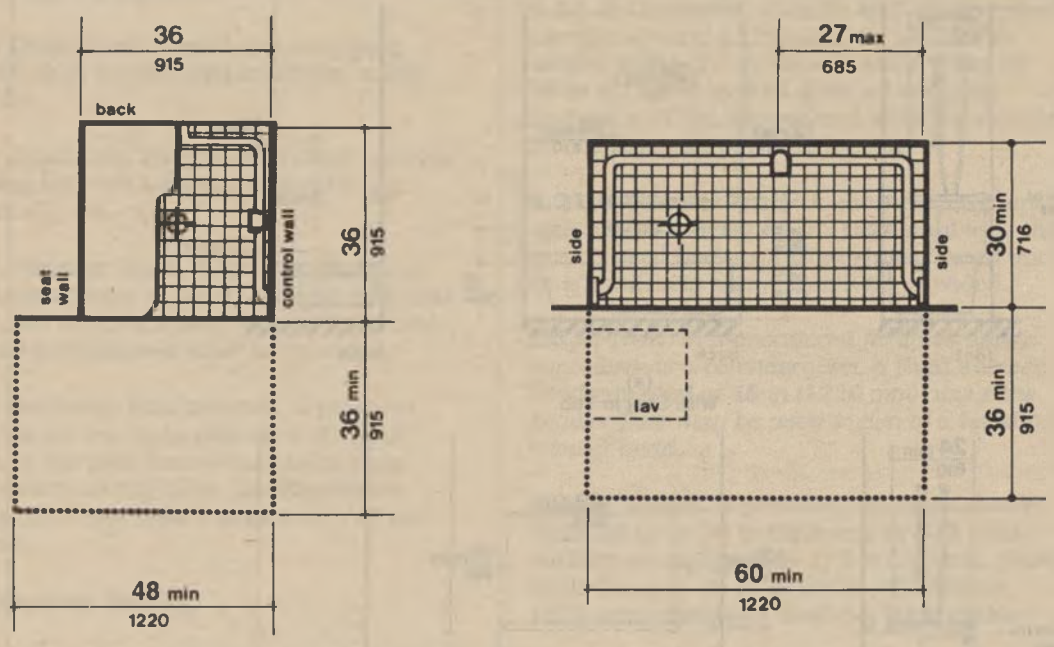

(a)
36-in by 36-in
(915-mm by 915-mm) Stall

(b)
30-in by 60-in
(760-mm by 1525-mm) Stall

Fig. 35
Shower Size and Clearances

4.23 Bathrooms, Bathing Facilities, and Shower Rooms

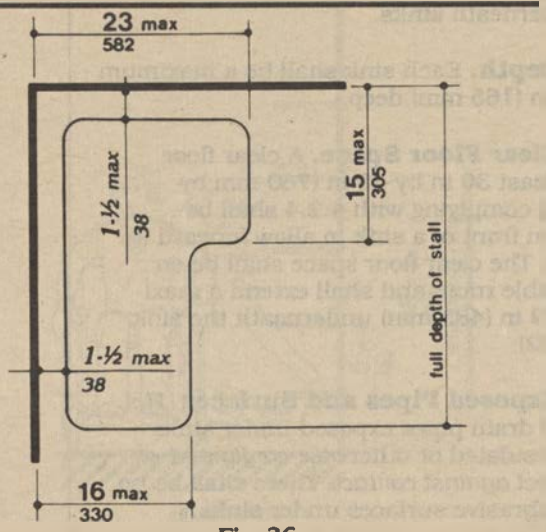

Fig. 36
Shower Seat Design

equipment are provided, *then* at least one of each shall be on an accessible route and shall comply with 4.27.

4.23 Bathrooms, Bathing Facilities, and Shower Rooms.

4.23.1 Minimum Number. Bathrooms, bathing facilities, or shower rooms *required to be accessible by 4.1* shall comply with 4.23 and shall be on an accessible route.

4.23.2 Doors. Doors to accessible bathrooms shall comply with 4.13. Doors shall not swing into the floor space required for any fixture.

4.23.3* Clear Floor Space. The accessible fixtures and controls required in 4.23.4, 4.23.5, 4.23.6, 4.23.7, 4.23.8, and 4.23.9 shall be on an accessible route. An unobstructed turning

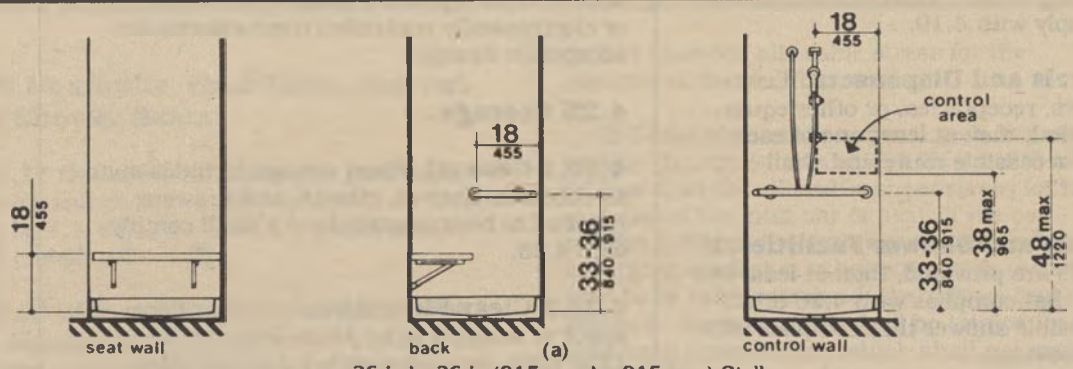

(a)
36-in by 36-in (915-mm by 915-mm) Stall

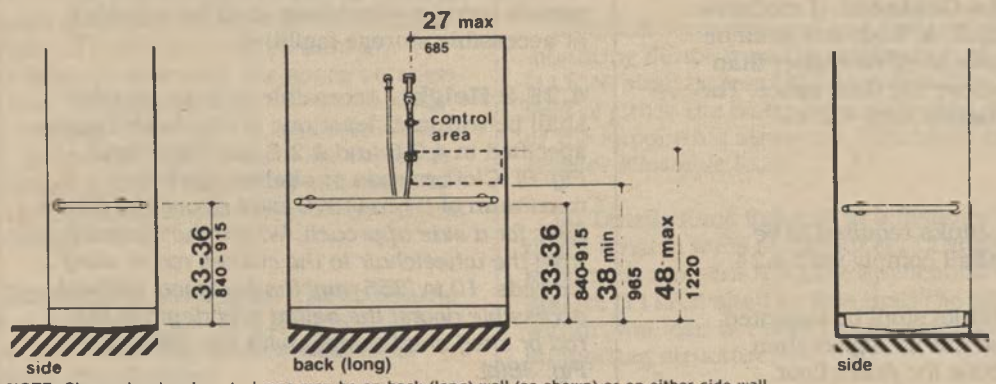

NOTE: Shower head and control area may be on back (long) wall (as shown) or on either side wall.

(b)
30-in by 60-in (760-mm by 1525-mm) Stall

Fig. 37
Grab Bars at Shower Stalls

space complying with 4.2.3 shall be provided within an accessible bathroom. The clear floor spaces at fixtures and controls, the accessible route, and the turning space may overlap.

4.23.4 Water Closets. If toilet stalls are provided, then at least one shall be a standard toilet stall complying with 4.17; *where 6 or more stalls are provided, in addition to the stall complying with 4.17.3, at least one stall 36 in (915 mm) wide with an outward swinging, self-closing door and parallel grab bars complying with Fig. 30(d) and 4.26 shall be provided. Water closets in such stalls* shall comply with 4.16. If water closets are not in stalls, then at least one shall comply with 4.16.

4.23.5 Urinals. If urinals are provided, then at least one shall comply with 4.18.

4.23.6 Lavatories and Mirrors. If lavatories and mirrors are provided, then at least one of each shall comply with 4.19.

4.23.7 Controls and Dispensers. If controls, dispensers, receptacles, or other equipment *are* provided, *then* at least one of each shall be on an accessible route and shall comply with 4.27.

4.23.8 Bathing and Shower Facilities. If tubs or showers are provided, then at least one accessible tub that complies with 4.20 or at least one accessible shower that complies with 4.21 shall be provided.

4.23.9* Medicine Cabinets. If medicine cabinets are provided, at least one shall be located with a usable shelf no higher than 44 in (1120 mm) above the floor space. The floor space shall comply with 4.2.4.

4.24 Sinks.

4.24.1 General. Sinks *required to be accessible by 4.1* shall comply with 4.24.

4.24.2 Height. Sinks shall be mounted with the counter or rim no higher than 34 in (865 mm) *above the finish* floor.

4.24.3 Knee Clearance. Knee clearance that is at least 27 in (685 mm) high, 30 in (760 mm) wide, and 19 in (485 mm) deep shall be provided underneath sinks.

4.24.4 Depth. Each sink shall be a maximum of 6-1/2 in (165 mm) deep.

4.24.5 Clear Floor Space. A clear floor space at least 30 in by 48 in (760 mm by 1220 mm) complying with 4.2.4 shall be provided in front of a sink to allow forward approach. The clear floor space shall be on an accessible route and shall extend a maximum of 19 in (485 mm) underneath the sink (see Fig. 32).

4.24.6 Exposed Pipes and Surfaces. Hot water and drain pipes exposed under sinks shall be insulated or otherwise *configured so as to protect against contact.* There shall be no sharp or abrasive surfaces under sinks.

4.24.7 Faucets. Faucets shall comply with 4.27.4. Lever-operated, push-type, touch-type, or electronically controlled mechanisms are acceptable designs.

4.25 Storage.

4.25.1 General. *Fixed* storage facilities such as cabinets, shelves, closets, and drawers *required to be accessible by 4.1* shall comply with 4.25.

4.25.2 Clear Floor Space. A clear floor space at least 30 in by 48 in (760 mm by 1220 mm) complying with 4.2.4 that allows either a forward or parallel approach by a person using a wheelchair shall be provided at accessible storage facilities.

4.25.3 Height. Accessible storage spaces shall be within at least one of the reach ranges specified in 4.2.5 and 4.2.6 *(see Fig. 5 and Fig. 6).* Clothes rods or shelves shall be a maximum of 54 in (1370 mm) *above the finish* floor *for a side approach. Where the distance from the wheelchair to the clothes rod or shelf exceeds 10 in (255 mm) (as in closets without accessible doors) the height and depth to the rod or shelf shall comply with Fig. 38(a) and Fig. 38(b).*

4.25.4 Hardware. Hardware for accessible storage facilities shall comply with 4.27.4. Touch latches and U-shaped pulls are acceptable.

4.26 Handrails, Grab Bars, and Tub and Shower Seats

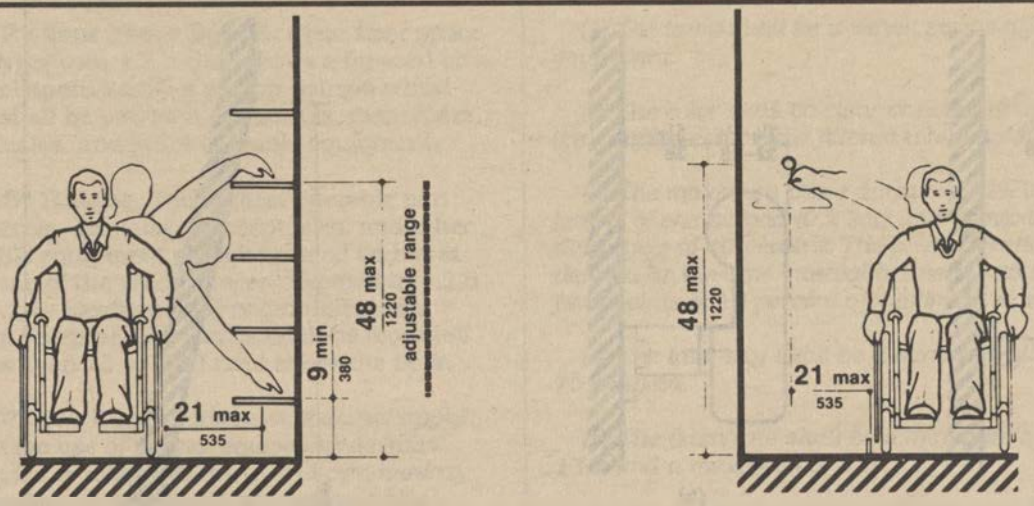

(a) Shelves *(b) Closets*

Fig. 38
Storage Shelves and Closets

4.26 Handrails, Grab Bars, and Tub and Shower Seats.

4.26.1* General. All handrails, grab bars, and tub and shower seats *required to be accessible by 4.1, 4.8, 4.9, 4.16, 4.17, 4.20 or 4.21* shall comply with 4.26.

4.26.2* Size and Spacing of Grab Bars and Handrails. The diameter or width of the gripping surfaces of a handrail or grab bar shall be 1-1/4 in to 1-1/2 in (32 mm to 38 mm), or the shape shall provide an equivalent gripping surface. If handrails or grab bars are mounted adjacent to a wall, the space between the wall and the grab bar shall be 1-1/2 in (38 mm) (see Fig. 39(a), (b), (c), and *(e)*). Handrails may be located in a recess if the recess is a maximum of 3 in (75 mm) deep and extends at least 18 in (455 mm) above the top of the rail (see Fig. 39(d)).

4.26.3 Structural Strength. The structural strength of grab bars, tub and shower seats, fasteners, and mounting devices shall meet the following specification:

(1) Bending stress in a grab bar or seat induced by the maximum bending moment from the application of 250 lbf (1112N) shall be less than the allowable stress for the material of the grab bar or seat.

(2) Shear stress induced in a grab bar or seat by the application of 250 lbf (1112N) shall be less than the allowable shear stress for the material of the grab bar or seat. If the connection between the grab bar or seat and its mounting bracket or other support is considered to be fully restrained, then direct and torsional shear stresses shall be totaled for the combined shear stress, which shall not exceed the allowable shear stress.

(3) Shear force induced in a fastener or mounting device from the application of 250 lbf (1112N) shall be less than the allowable lateral load of either the fastener or mounting device or the supporting structure, whichever is the smaller allowable load.

(4) Tensile force induced in a fastener by a direct tension force of 250 lbf (1112N) plus the maximum moment from the application of 250 lbf (1112N) shall be less than the allowable withdrawal load between the fastener and the supporting structure.

(5) Grab bars shall not rotate within their fittings.

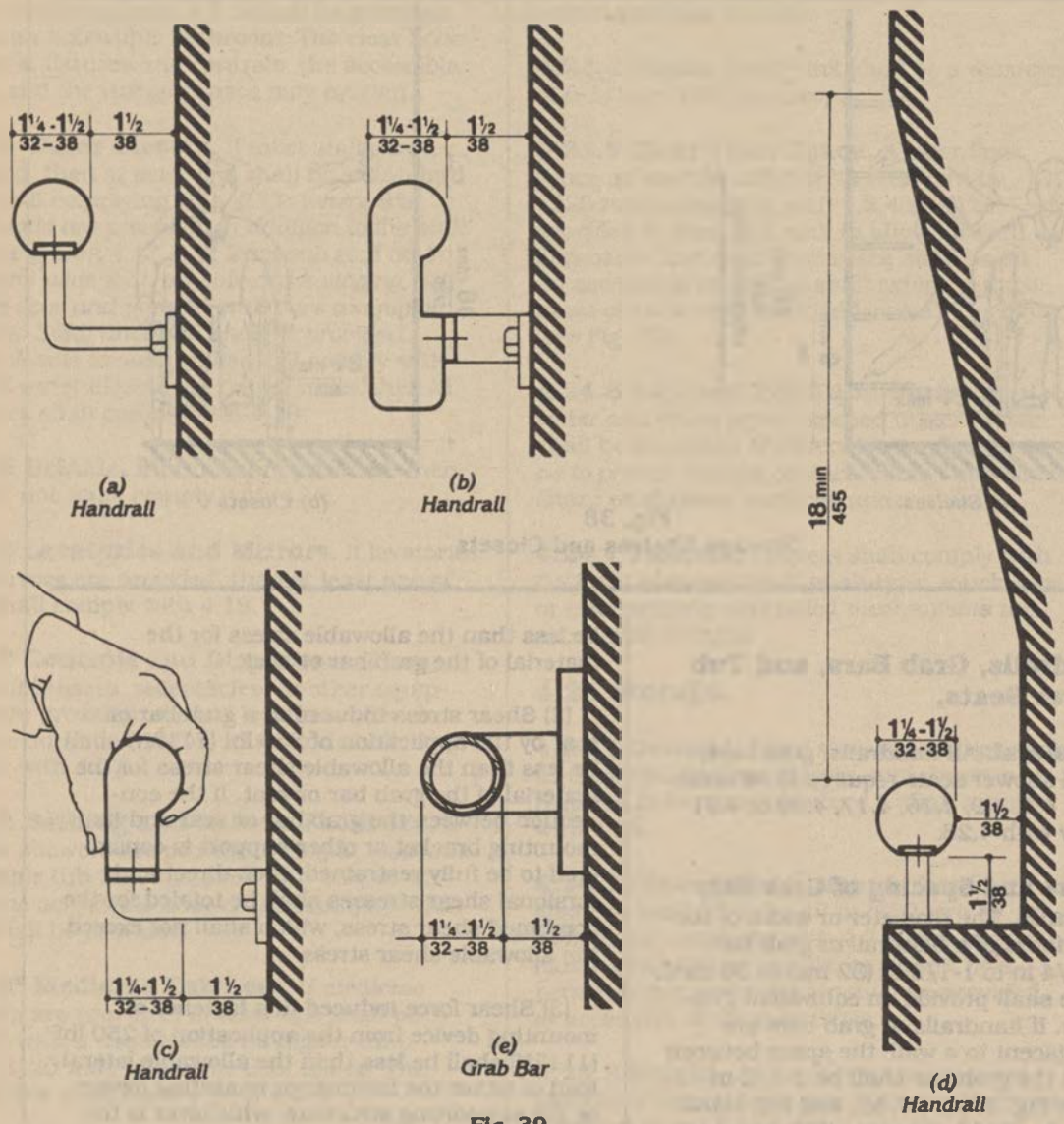

Fig. 39
Size and Spacing of Handrails and Grab Bars

4.26.4 Eliminating Hazards. A handrail or grab bar and any wall or other surface adjacent to it shall be free of any sharp or abrasive elements. Edges shall have a minimum radius of 1/8 in (3.2 mm).

4.27 Controls and Operating Mechanisms.

4.27.1 General. Controls and operating mechanisms *required to be accessible by 4.1* shall comply with 4.27.

4.28 Alarms

4.27.2 Clear Floor Space. Clear floor space complying with 4.2.4 that allows a forward or a parallel approach by a person using a wheelchair shall be provided at controls, dispensers, receptacles, and other operable equipment.

4.27.3* Height. The highest operable part of controls, dispensers, receptacles, and other operable equipment shall be placed within at least one of the reach ranges specified in 4.2.5 and 4.2.6. Electrical and communications system receptacles on walls shall be mounted no less than 15 in (380 mm) above the floor.

EXCEPTION: These requirements do not apply where the use of special equipment dictates otherwise or where electrical and communications systems receptacles are not normally intended for use by building occupants.

4.27.4 Operation. Controls and operating mechanisms shall be operable with one hand and shall not require tight grasping, pinching, or twisting of the wrist. The force required to activate controls shall be no greater than 5 lbf (22.2 N).

4.28 Alarms.

4.28.1 General. *Alarm systems required to be accessible by 4.1 shall comply with 4.28. At a minimum, visual signal appliances shall be provided in buildings and facilities in each of the following areas: restrooms and any other general usage areas (e.g., meeting rooms), hallways, lobbies, and any other area for common use.*

4.28.2* Audible Alarms. If provided, audible emergency alarms shall produce a sound that exceeds the prevailing equivalent sound level in the room or space by at least 15 *dbA* or exceeds any maximum sound level with a duration of *60* seconds by 5 *dbA*, whichever is louder. Sound levels for alarm signals shall not exceed 120 *dbA*.

4.28.3* Visual Alarms. *Visual alarm signal appliances shall be integrated into the building or facility alarm system. If single station audible alarms are provided then single station visual alarm signals shall be provided. Visual alarm signals shall have the following minimum photometric and location features:*

(1) The lamp shall be a xenon strobe type or equivalent.

(2) The color shall be clear or nominal white (i.e., unfiltered or clear filtered white light).

(3) The maximum pulse duration shall be two-tenths of one second (0.2 sec) with a maximum duty cycle of 40 percent. The pulse duration is defined as the time interval between initial and final points of 10 percent of maximum signal.

(4) The intensity shall be a minimum of 75 candela.

(5) The flash rate shall be a minimum of 1 Hz and a maximum of 3 Hz.

(6) The appliance shall be placed 80 in (2030 mm) above the highest floor level within the space or 6 in (152 mm) below the ceiling, whichever is lower.

(7) In general, no place in any room or space required to have a visual signal appliance shall be more than 50 ft (15 m) from the signal (in the horizontal plane). In large rooms and spaces exceeding 100 ft (30 m) across, without obstructions 6 ft (2 m) above the finish floor, such as auditoriums, devices may be placed around the perimeter, spaced a maximum 100 ft (30 m) apart, in lieu of suspending appliances from the ceiling.

(8) No place in common corridors or hallways in which visual alarm signalling appliances are required shall be more than 50 ft (15 m) from the signal.

4.28.4* Auxiliary Alarms. *Units and* sleeping accommodations shall have a visual alarm connected to the building emergency alarm system or shall have a standard 110-volt electrical receptacle into which such an alarm can be connected *and a means by which a signal from the building emergency alarm system can trigger such an auxiliary alarm. When visual alarms are in place the signal shall be visible in all areas of the unit or room.* Instructions for use of the auxiliary alarm or receptacle shall be provided.

4.29 *Detectable* Warnings.

4.29.1 General. *Detectable* warnings *required by 4.1 and 4.7* shall comply with 4.29.

4.29.2* *Detectable* Warnings on Walking Surfaces. *Detectable* warnings shall consist of *raised truncated domes with a diameter of nominal 0.9 in (23 mm), a height of nominal 0.2 in (5 mm) and a center-to-center spacing of nominal 2.35 in (60 mm) and* shall contrast *visually* with *adjoining surfaces, either light-on-dark, or dark-on-light.*

The material used to provide contrast shall be an integral part of the walking surface. Detectable warnings used on interior surfaces shall differ from adjoining walking surfaces in resiliency or sound-on-cane contact.

4.29.3 *Detectable* Warnings on Doors To Hazardous Areas. *(Reserved).*

4.29.4 *Detectable* Warnings at Stairs. *(Reserved).*

4.29.5 *Detectable* Warnings at Hazardous Vehicular Areas. If a walk crosses or adjoins a vehicular way, *and the walking surfaces are not separated by* curbs, railings, or other elements *between the pedestrian areas and vehicular areas*, the boundary between the areas shall be defined by a continuous *detectable* warning *which is* 36 in (915 mm) wide, complying with 4.29.2.

4.29.6 *Detectable* Warnings at Reflecting Pools. The edges of reflecting pools shall be protected by railings, walls, curbs, or *detectable* warnings complying with 4.29.2.

4.29.7 Standardization. *(Reserved).*

4.30 Signage.

4.30.1* General. Signage *required to be accessible by 4.1 shall comply with the applicable provisions of 4.30.*

4.30.2* Character Proportion. Letters and numbers on signs shall have a width-to-height ratio between 3:5 and 1:1 and a stroke-width-to-height ratio between 1:5 and 1:10.

4.30.3 Character Height. *Characters and numbers on signs shall be sized according to the viewing distance from which they are to be read. The minimum height is measured using an upper case X. Lower case characters are permitted.*

Height Above Finished Floor	*Minimum Character Height*
Suspended or Projected Overhead in compliance with 4.4.2	*3 in. (75 mm) minimum*

4.30.4* Raised *and Brailled* Characters *and Pictorial Symbol Signs (Pictograms).* Letters and numerals shall be raised 1/32 in, *upper case*, sans serif *or simple serif type and shall be accompanied with Grade 2 Braille.* Raised characters shall be at least 5/8 in (16 mm) high, but no higher than 2 in (50 mm). *Pictograms shall be accompanied by the equivalent verbal description placed directly below the pictogram. The border dimension of the pictogram shall be 6 in (152 mm) minimum in height.*

4.30.5* *Finish and Contrast.* *The characters and background of signs shall be eggshell, matte, or other non-glare finish.* Characters and symbols shall contrast with their background — either light characters on a dark background or dark characters on a light background.

4.30.6 *Mounting Location and Height.* *Where permanent identification is provided for rooms and spaces, signs shall be installed on the wall adjacent to the latch side of the door. Where there is no wall space to the latch side of the door, including at double leaf doors, signs shall be placed on the nearest adjacent wall. Mounting height shall be 60 in (1525 mm) above the finish floor to the centerline of the sign. Mounting location for such signage shall be so that a person may approach within 3 in (76 mm) of signage without encountering protruding objects or standing within the swing of a door.*

4.30.7* Symbols of Accessibility.

(1) Facilities and elements required to be identified as accessible by 4.1 shall use the international symbol of accessibility. The

4.30 Signage

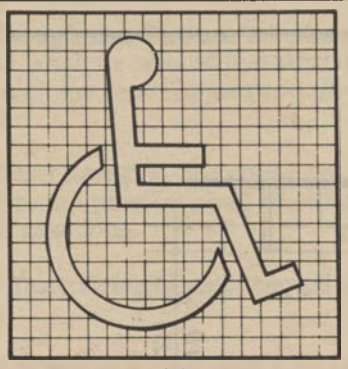

(a)
Proportions
International Symbol of Accessibility

(b)
Display Conditions
International Symbol of Accessibility

(c)
International TDD Symbol

(d)
International Symbol of Access for Hearing Loss

Fig. 43
International Symbols

symbol shall be displayed as shown in Fig. 43*(a) and (b)*.

(2) Volume Control Telephones. Telephones required to have a volume control by 4.1.3(17)(b) shall be identified by a sign containing a depiction of a telephone handset with radiating sound waves.

(3) Text Telephones. Text telephones required by 4.1.3 (17)(c) shall be identified by the international TDD symbol (Fig 43(c)). In addition, if a facility has a public text telephone, directional signage indicating the location of the nearest text telephone shall be placed adjacent to all banks of telephones which do not contain a text telephone. Such directional signage shall include the international TDD symbol. If a facility has no banks of telephones, the directional signage shall be provided at the entrance (e.g., in a building directory).

(4) Assistive Listening Systems. In assembly areas where permanently installed assistive listening systems are required by 4.1.3(19)(b) the availability of such systems shall be identified with signage that includes the international symbol of access for hearing loss (Fig 43(d)).

4.30.8* *Illumination Levels.* *(Reserved).*

4.31 Telephones.

4.31.1 General. Public telephones *required to be accessible by 4.1* shall comply with 4.31.

4.31.2 Clear Floor or Ground Space. A clear floor or ground space at least 30 in by 48 in (760 mm by 1220 mm) that allows either a forward or parallel approach by a person using a wheelchair shall be provided at telephones (see Fig. 44). The clear floor or ground space shall comply with 4.2.4. Bases, enclosures, and fixed seats shall not impede approaches to telephones by people who use wheelchairs.

4.31.3* Mounting Height. The highest operable part of the telephone shall be within the reach ranges specified in 4.2.5 or 4.2.6.

4.31.4 *Protruding Objects.* *Telephones shall comply with 4.4.*

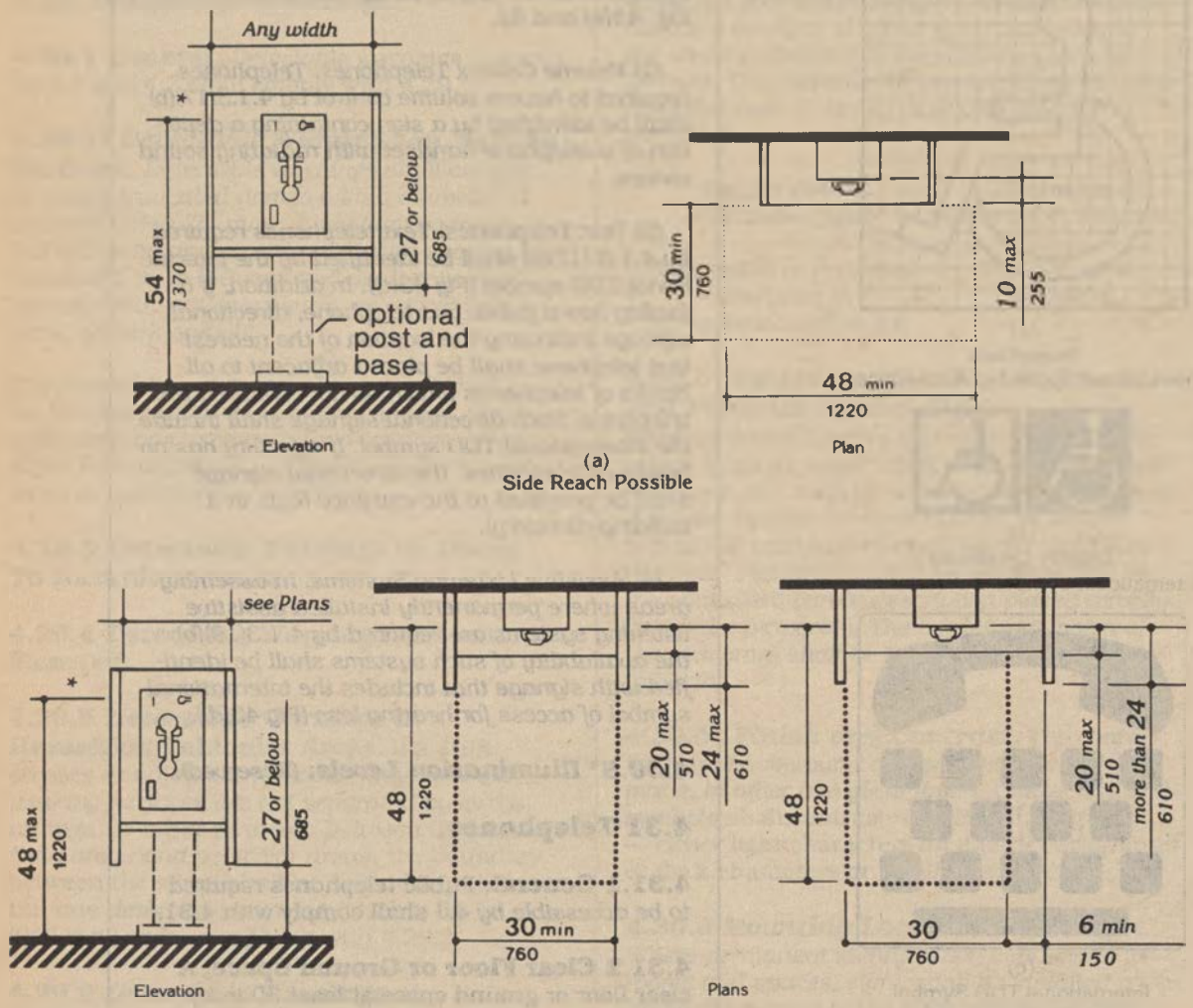

Height to highest operable parts which are essential to basic operation of telephone.

Fig. 44
Mounting Heights and Clearances for Telephones

4.31.5 *Hearing Aid Compatible and Volume Control Telephones Required by 4.1.*

(1) Telephones shall be hearing aid compatible.

(2) Volume controls, *capable of a minimum of 12 dbA and a maximum of 18 dbA above normal, shall be provided in accordance with 4.1.3. If an automatic reset is provided then 18 dbA may be exceeded.*

4.31.6 Controls. Telephones shall have pushbutton controls where service for such equipment is available.

4.32 *Fixed or Built-in* Seating and Tables

4.31.7 Telephone Books. Telephone books, if provided, shall be located *in a position that complies with the reach ranges specified in 4.2.5 and 4.2.6.*

4.31.8 Cord Length. The cord from the telephone to the handset shall be at least 29 in (735 mm) long.

4.31.9* Text Telephones Required by 4.1.

(1) Text telephones used with a pay telephone shall be permanently affixed within, or adjacent to, the telephone enclosure. If an acoustic coupler is used, the telephone cord shall be sufficiently long to allow connection of the text telephone and the telephone receiver.

(2) Pay telephones designed to accommodate a portable text telephone shall be equipped with a shelf and an electrical outlet within or adjacent to the telephone enclosure. The telephone handset shall be capable of being placed flush on the surface of the shelf. The shelf shall be capable of accommodating a text telephone and shall have 6 in (152 mm) minimum vertical clearance in the area where the text telephone is to be placed.

(3) Equivalent facilitation may be provided. For example, a portable text telephone may be made available in a hotel at the registration desk if it is available on a 24-hour basis for use with nearby public pay telephones. In this instance, at least one pay telephone shall comply with paragraph 2 of this section. In addition, if an acoustic coupler is used, the telephone handset cord shall be sufficiently long so as to allow connection of the text telephone and the telephone receiver. Directional signage shall be provided and shall comply with 4.30.7.

4.32 *Fixed or Built-in* Seating and Tables.

4.32.1 Minimum Number. Fixed or built-in seating or tables *required to be accessible by 4.1* shall comply with 4.32.

4.32.2 Seating. If seating spaces for people in wheelchairs are provided at *fixed* tables or counters, clear floor space complying with 4.2.4 shall be provided. Such clear floor space shall not overlap knee space by more than 19 in (485 mm) (see Fig. 45).

4.32.3 Knee Clearances. If seating for people in wheelchairs is provided at tables *or* counters, knee spaces at least 27 in (685 mm) high, 30 in (760 mm) wide, and 19 in (485 mm) deep shall be provided (see Fig. 45).

4.32.4* Height of Tables or Counters. The tops of *accessible* tables and *counters* shall be from 28 in to 34 in (710 mm to 865 mm) *above the finish* floor or ground.

4.33 Assembly Areas.

4.33.1 Minimum Number. Assembly *and associated* areas *required to be accessible by 4.1 shall comply with 4.33.*

4.33.2* Size of Wheelchair Locations. Each wheelchair location shall provide minimum clear ground or floor spaces as shown in Fig. 46.

4.33.3* Placement of Wheelchair Locations. Wheelchair areas shall be an integral part of any fixed seating plan and shall be *provided so as to provide people with physical disabilities a choice of admission prices and lines of sight comparable to those for members of the general public.* They shall adjoin an accessible route that also serves as a means of egress in case of emergency. *At least one companion fixed seat shall be provided next to each wheelchair seating area. When the seating capacity exceeds 300, wheelchair spaces shall be provided in more than one location. Readily removable seats may be installed in wheelchair spaces when the spaces are not required to accommodate wheelchair users.*

EXCEPTION: Accessible viewing positions may be clustered for bleachers, balconies, and other areas having sight lines that require slopes of greater than 5 percent. Equivalent accessible viewing positions may be located on levels having accessible egress.

4.33.4 Surfaces. The ground or floor at wheelchair locations shall be level and shall comply with 4.5.

4.33 Assembly Areas

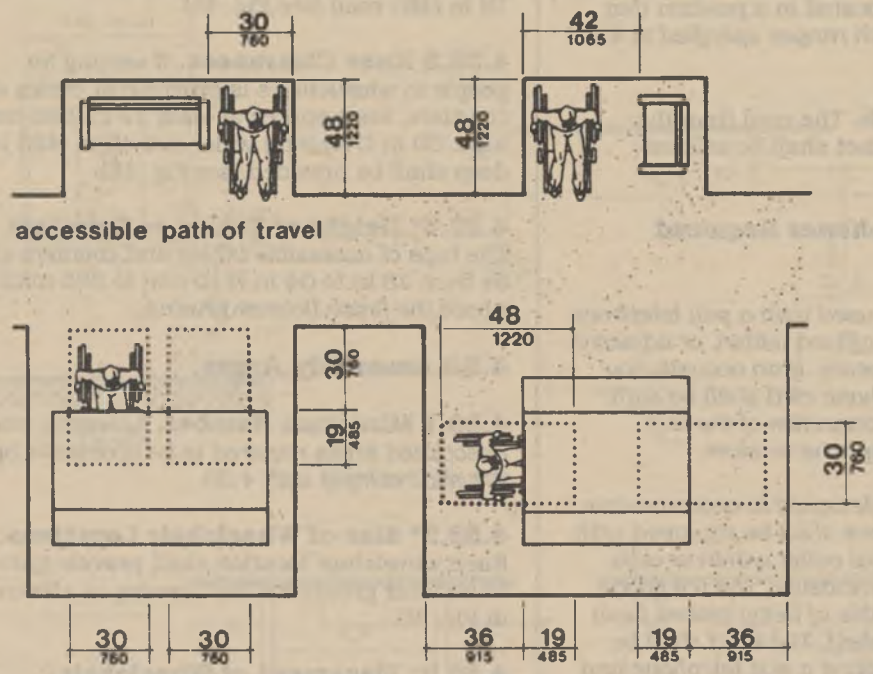

Fig. 45
Minimum Clearances for Seating and Tables

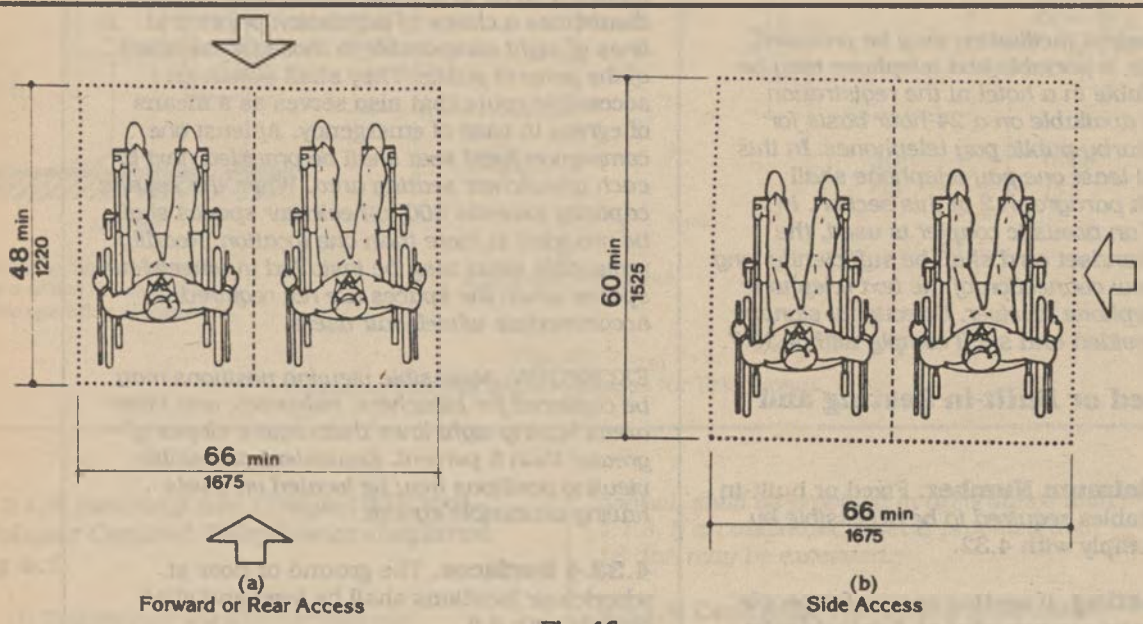

(a)
Forward or Rear Access

(b)
Side Access

Fig. 46
Space Requirements for Wheelchair Seating Spaces in Series

4.34 Automated Teller Machines

4.33.5 Access to Performing Areas. An accessible route shall connect wheelchair seating locations with performing areas, including stages, arena floors, dressing rooms, locker rooms, and other spaces used by performers.

4.33.6* Placement of Listening Systems. If the listening system provided serves individual fixed seats, then such seats shall be located within a 50 ft (15 m) viewing distance of the stage or playing area and shall have a complete view of the stage or playing area.

4.33.7* Types of Listening Systems. *Assistive listening systems (ALS) are intended to augment standard public address and audio systems by providing signals which can be received directly by persons with special receivers or their own hearing aids and which eliminate or filter background noise. The type of assistive listening system appropriate for a particular application depends on the characteristics of the setting, the nature of the program, and the intended audience. Magnetic induction loops, infra-red and radio frequency systems are types of listening systems which are appropriate for various applications.*

4.34 Automated Teller Machines.

4.34.1 General. *Each machine required to be accessible by 4.1.3 shall be on an accessible route and shall comply with 4.34.*

4.34.2 Controls. *Controls for user activation shall comply with the requirements of 4.27.*

4.34.3 Clearances and Reach Range. *Free standing or built-in units not having a clear space under them shall comply with 4.27.2 and 4.27.3 and provide for a parallel approach and both a forward and side reach to the unit allowing a person in a wheelchair to access the controls and dispensers.*

4.34.4 Equipment for Persons with Vision Impairments. *Instructions and all information for use shall be made accessible to and independently usable by persons with vision impairments.*

4.35 Dressing and Fitting Rooms.

4.35.1 General. *Dressing and fitting rooms required to be accessible by 4.1 shall comply with 4.35 and shall be on an accessible route.*

4.35.2 Clear Floor Space. *A clear floor space allowing a person using a wheelchair to make a 180-degree turn shall be provided in every accessible dressing room entered through a swinging or sliding door. No door shall swing into any part of the turning space. Turning space shall not be required in a private dressing room entered through a curtained opening at least 32 in (815 mm) wide if clear floor space complying with section 4.2 renders the dressing room usable by a person using a wheelchair.*

4.35.3 Doors. *All doors to accessible dressing rooms shall be in compliance with section 4.13.*

4.35.4 Bench. *Every accessible dressing room shall have a 24 in by 48 in (610 mm by 1220 mm) bench fixed to the wall along the longer dimension. The bench shall be mounted 17 in to 19 in (430 mm to 485 mm) above the finish floor. Clear floor space shall be provided alongside the bench to allow a person using a wheelchair to make a parallel transfer onto the bench. The structural strength of the bench and attachments shall comply with 4.26.3. Where installed in conjunction with showers, swimming pools, or other wet locations, water shall not accumulate upon the surface of the bench and the bench shall have a slip-resistant surface.*

4.35.5 Mirror. *Where mirrors are provided in dressing rooms of the same use, then in an accessible dressing room, a full-length mirror, measuring at least 18 in wide by 54 in high (460 mm by 1370 mm), shall be mounted in a position affording a view to a person on the bench as well as to a person in a standing position.*

NOTE: Sections 4.1.1 through 4.1.7 and sections 5 through 10 are different from ANSI A117.1 in their entirety and are printed in standard type.

5. RESTAURANTS AND CAFETERIAS.

5.1* General. Except as specified or modified in this section, restaurants and cafeterias shall comply with the requirements of 4.1 to 4.35. Where fixed tables (or dining counters where food is consumed but there is no service) are provided, at least 5 percent, but not less than one, of the fixed tables (or a portion of the dining counter) shall be accessible and shall comply with 4.32 as required in 4.1.3(18). In establishments where separate areas are designated for smoking and non-smoking patrons, the required number of accessible fixed tables (or counters) shall be proportionally distributed between the smoking and non-smoking areas. In new construction, and where practicable in alterations, accessible fixed tables (or counters) shall be distributed throughout the space or facility.

5.2 Counters and Bars. Where food or drink is served at counters exceeding 34 in (865 mm) in height for consumption by customers seated on stools or standing at the counter, a portion of the main counter which is 60 in (1525 mm) in length minimum shall be provided in compliance with 4.32 or service shall be available at accessible tables within the same area.

5.3 Access Aisles. All accessible fixed tables shall be accessible by means of an access aisle at least 36 in (915 mm) clear between parallel edges of tables or between a wall and the table edges.

5.4 Dining Areas. In new construction, all dining areas, including raised or sunken dining areas, loggias, and outdoor seating areas, shall be accessible. In non-elevator buildings, an accessible means of vertical access to the mezzanine is not required under the following conditions: 1) the area of mezzanine seating measures no more than 33 percent of the area of the total accessible seating area; 2) the same services and decor are provided in an accessible space usable by the general public; and, 3) the accessible areas are not restricted to use by people with disabilities. In alterations, accessibility to raised or sunken dining areas, or to all parts of outdoor seating areas is not required provided that the same services and decor are provided in an accessible space usable by the general public and are not restricted to use by people with disabilities.

5.5 Food Service Lines. Food service lines shall have a minimum clear width of 36 in (915 mm), with a preferred clear width of 42 in (1065 mm) to allow passage around a person using a wheelchair. Tray slides shall be mounted no higher than 34 in (865 mm) above the floor (see Fig. 53). If self-service shelves

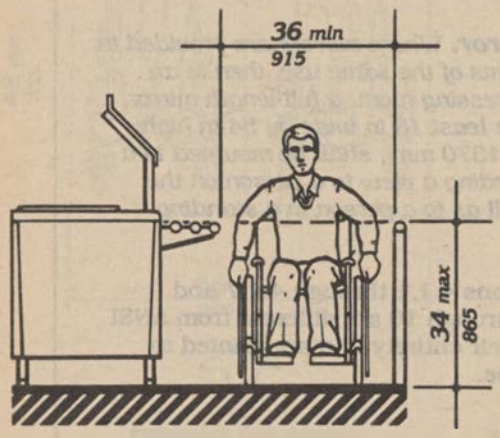

Fig. 53
Food Service Lines

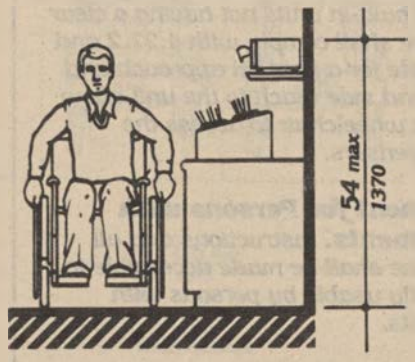

Fig. 54
Tableware Areas

are provided, at least 50 percent of each type must be within reach ranges specified in 4.2.5 and 4.2.6.

5.6 Tableware and Condiment Areas. Self-service shelves and dispensing devices for tableware, dishware, condiments, food and beverages shall be installed to comply with 4.2 (see Fig. 54).

5.7 Raised Platforms. In banquet rooms or spaces where a head table or speaker's lectern is located on a raised platform, the platform shall be accessible in compliance with 4.8 or 4.11. Open edges of a raised platform shall be protected by placement of tables or by a curb.

5.8 Vending Machines and Other Equipment. Spaces for vending machines and other equipment shall comply with 4.2 and shall be located on an accessible route.

5.9 Quiet Areas. (Reserved).

6. MEDICAL CARE FACILITIES.

6.1 General. Medical care facilities included in this section are those in which people receive physical or medical treatment or care and where persons may need assistance in responding to an emergency and where the period of stay may exceed twenty-four hours. In addition to the requirements of 4.1 through 4.35, medical care facilities and buildings shall comply with 6.

(1) Hospitals - general purpose hospitals, psychiatric facilities, detoxification facilities — At least 10 percent of patient bedrooms and toilets, and all public use and common use areas are required to be designed and constructed to be accessible.

(2) Hospitals and rehabilitation facilities that specialize in treating conditions that affect mobility, or units within either that specialize in treating conditions that affect mobility — All patient bedrooms and toilets, and all public use and common use areas are required to be designed and constructed to be accessible.

(3) Long term care facilities, nursing homes — At least 50 percent of patient bedrooms and toilets, and all public use and common use areas are required to be designed and constructed to be accessible.

(4) Alterations to patient bedrooms.

(a) When patient bedrooms are being added or altered as part of a planned renovation of an entire wing, a department, or other discrete area of an existing medical facility, a percentage of the patient bedrooms that are being added or altered shall comply with 6.3. The percentage of accessible rooms provided shall be consistent with the percentage of rooms required to be accessible by the applicable requirements of 6.1(1), 6.1(2), or 6.1(3), until the number of accessible patient bedrooms in the facility equals the overall number that would be required if the facility were newly constructed. (For example, if 20 patient bedrooms are being altered in the obstetrics department of a hospital, 2 of the altered rooms must be made accessible. If, within the same hospital, 20 patient bedrooms are being altered in a unit that specializes in treating mobility impairments, all of the altered rooms must be made accessible.) Where toilet/bath rooms are part of patient bedrooms which are added or altered and required to be accessible, each such patient toilet/bathroom shall comply with 6.4.

(b) When patient bedrooms are being added or altered individually, and not as part of an alteration of the entire area, the altered patient bedrooms shall comply with 6.3, unless either: a) the number of accessible rooms provided in the department or area containing the altered patient bedroom equals the number of accessible patient bedrooms that would be required if the percentage requirements of 6.1(1), 6.1(2), or 6.1(3) were applied to that department or area; or b) the number of accessible patient bedrooms in the facility equals the overall number that would be required if the facility were newly constructed. Where toilet/bathrooms are part of patient bedrooms which are added or altered and required to be accessible, each such toilet/bathroom shall comply with 6.4.

6.2 Entrances. At least one accessible entrance that complies with 4.14 shall be protected from the weather by canopy or roof overhang. Such entrances shall incorporate a passenger loading zone that complies with 4.6.6.

6.3 Patient Bedrooms. Provide accessible patient bedrooms in compliance with 4.1 through 4.35. Accessible patient bedrooms shall comply with the following:

(1) Each bedroom shall have a door that complies with 4.13.

EXCEPTION: Entry doors to acute care hospital bedrooms for in-patients shall be exempted from the requirement in 4.13.6 for maneuvering space at the latch side of the door if the door is at least 44 in (1120 mm) wide.

(2) Each bedroom shall have adequate space to provide a maneuvering space that complies with 4.2.3. In rooms with 2 beds, it is preferable that this space be located between beds.

(3) Each bedroom shall have adequate space to provide a minimum clear floor space of 36 in (915 mm) along each side of the bed and to provide an accessible route complying with 4.3.3 to each side of each bed.

6.4 Patient Toilet Rooms. Where toilet/bath rooms are provided as a part of a patient bedroom, each patient bedroom that is required to be accessible shall have an accessible toilet/bath room that complies with 4.22 or 4.23 and shall be on an accessible route.

7. BUSINESS AND MERCANTILE.

7.1 General. In addition to the requirements of 4.1 to 4.35, the design of all areas used for business transactions with the public shall comply with 7.

7.2 Sales and Service Counters, Teller Windows, Information Counters.

(1) In department stores and miscellaneous retail stores where counters have cash registers and are provided for sales or distribution of goods or services to the public, at least one of each type shall have a portion of the counter which is at least 36 in (915 mm) in length with a maximum height of 36 in (915 mm) above the finish floor. It shall be on an accessible route complying with 4.3. The accessible counters must be dispersed throughout the building or facility. In alterations where it is technically infeasible to provide an accessible counter, an auxiliary counter meeting these requirements may be provided.

(2) At ticketing counters, teller stations in a bank, registration counters in hotels and motels, box office ticket counters, and other counters that may not have a cash register but at which goods or services are sold or distributed, either:

(i) a portion of the main counter which is a minimum of 36 in (915 mm) in length shall be provided with a maximum height of 36 in (915 mm); or

(ii) an auxiliary counter with a maximum height of 36 in (915 mm) in close proximity to the main counter shall be provided; or

(iii) equivalent facilitation shall be provided (e.g., at a hotel registration counter, equivalent facilitation might consist of: (1) provision of a folding shelf attached to the main counter on which an individual with disabilities can write, and (2) use of the space on the side of the counter or at the concierge desk, for handing materials back and forth).

All accessible sales and service counters shall be on an accessible route complying with 4.3.

(3)* Assistive Listening Devices. (Reserved)

7.3* Check-out Aisles.

(1) In new construction, accessible check-out aisles shall be provided in conformance with the table below:

Total Check-out Aisles of Each Design	Minimum Number of Accessible Check-out Aisles (of each design)
1 – 4	1
5 – 8	2
8 – 15	3
over 15	3, plus 20% of additional aisles

EXCEPTION: In new construction, where the selling space is under 5000 square feet, only one check-out aisle is required to be accessible.

EXCEPTION: In alterations, at least one check-out aisle shall be accessible in facilities under 5000 square feet of selling space. In facilities of 5000 or more square feet of selling space, at least one of each design of check-out aisle shall be made accessible when altered until the number of accessible check-out aisles of each design equals the number required in new construction.

Examples of check-out aisles of different "design" include those which are specifically designed to serve different functions. Different "design" includes but is not limited to the following features - length of belt or no belt; or permanent signage designating the aisle as an express lane.

(2) Clear aisle width for accessible check-out aisles shall comply with 4.2.1 and maximum adjoining counter height shall not exceed 38 in (965 mm) above the finish floor. The top of the lip shall not exceed 40 in (1015 mm) above the finish floor.

(3) Signage identifying accessible check-out aisles shall comply with 4.30.7 and shall be mounted above the check-out aisle in the same location where the check-out number or type of check-out is displayed.

7.4 Security Bollards. Any device used to prevent the removal of shopping carts from store premises shall not prevent access or egress to people in wheelchairs. An alternate entry that is equally convenient to that provided for the ambulatory population is acceptable.

8. LIBRARIES.

8.1 General. In addition to the requirements of 4.1 to 4.35, the design of all public areas of a library shall comply with 8, including reading and study areas, stacks, reference rooms, reserve areas, and special facilities or collections.

8.2 Reading and Study Areas. At least 5 percent or a minimum of one of each element of fixed seating, tables, or study carrels shall comply with 4.2 and 4.32. Clearances between fixed accessible tables and between study carrels shall comply with 4.3.

8.3 Check-Out Areas. At least one lane at each check-out area shall comply with 7.2(1). Any traffic control or book security gates or turnstiles shall comply with 4.13.

8.4 Card Catalogs and Magazine Displays. Minimum clear aisle space at card catalogs and magazine displays shall comply with Fig. 55. Maximum reach height shall comply with 4.2, with a height of 48 in (1220 mm) preferred irrespective of approach allowed.

8.5 Stacks. Minimum clear aisle width between stacks shall comply with 4.3, with a minimum clear aisle width of 42 in (1065 mm) preferred where possible. Shelf height in stack areas is unrestricted (see Fig. 56).

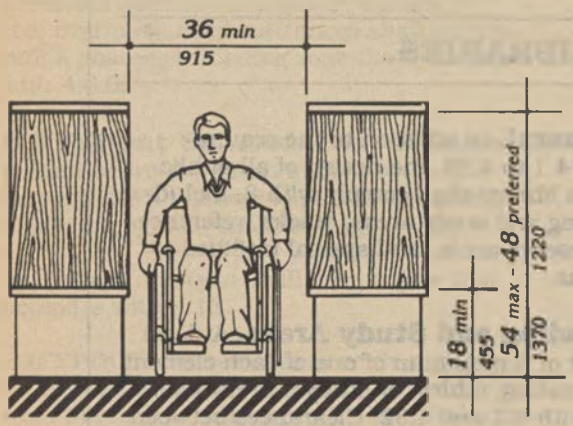

Fig. 55
Card Catalog

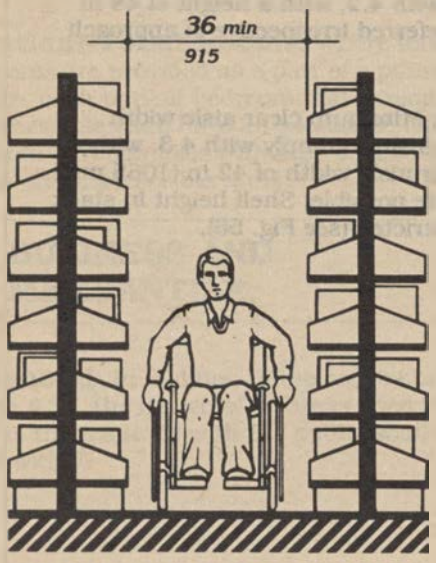

Fig. 56
Stacks

9. ACCESSIBLE TRANSIENT LODGING.

(1) Except as specified in the special technical provisions of this section, accessible transient lodging shall comply with the applicable requirements of 4.1 through 4.35. Transient lodging includes facilities or portions thereof used for sleeping accommodations, when not classed as a medical care facility.

9.1 Hotels, Motels, Inns, Boarding Houses, Dormitories, Resorts and Other Similar Places of Transient Lodging.

9.1.1 General. All public use and common use areas are required to be designed and constructed to comply with section 4 (Accessible Elements and Spaces: Scope and Technical Requirements).

EXCEPTION: Sections 9.1 through 9.4 do not apply to an establishment located within a building that contains not more than five rooms for rent or hire and that is actually occupied by the proprietor of such establishment as the residence of such proprietor.

9.1.2 Accessible Units, Sleeping Rooms, and Suites. Accessible sleeping rooms or suites that comply with the requirements of 9.2 (Requirements for Accessible Units, Sleeping Rooms, and Suites) shall be provided in conformance with the table below. In addition, in hotels, of 50 or more sleeping rooms or suites, additional accessible sleeping rooms or suites that include a roll-in shower shall also be provided in conformance with the table below. Such accommodations shall comply with the requirements of 9.2, 4.21, and Figure 57(a) or (b).

9.1.3 Sleeping Accommodations for Persons with Hearing Impairments

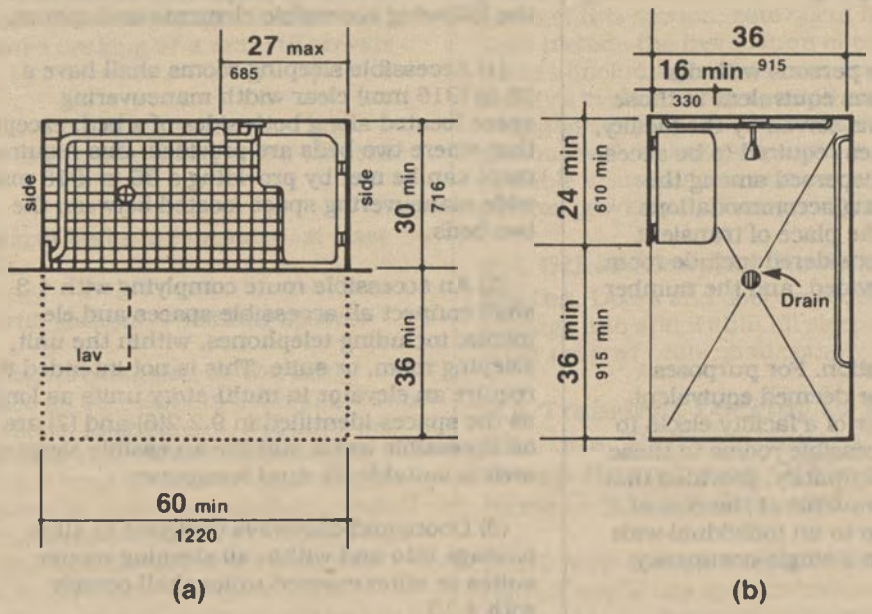

Fig. 57
Roll-in Shower with Folding Seat

Number of Rooms	Accessible Rooms	Rooms with Roll-in Showers
1 to 25	1	
26 to 50	2	
51 to 75	3	1
76 to 100	4	1
101 to 150	5	2
151 to 200	6	2
201 to 300	7	3
301 to 400	8	4
401 to 500	9	4 plus one for each additional 100 over 400
501 to 1000	2% of total	
1001 and over	20 plus 1 for each 100 over 1000	

9.1.3 Sleeping Accommodations for Persons with Hearing Impairments. In addition to those accessible sleeping rooms and suites required by 9.1.2, sleeping rooms and suites that comply with 9.3 (Visual Alarms, Notification Devices, and Telephones) shall be provided in conformance with the following table:

Number of Elements	Accessible Elements
1 to 25	1
26 to 50	2
51 to 75	3
76 to 100	4
101 to 150	5
151 to 200	6
201 to 300	7
301 to 400	8
401 to 500	9
501 to 1000	2% of total
1001 and over	20 plus 1 for each 100 over 1000

9.1.4 Classes of Sleeping Accommodations.

(1) In order to provide persons with disabilities a range of options equivalent to those available to other persons served by the facility, sleeping rooms and suites required to be accessible by 9.1.2 shall be dispersed among the various classes of sleeping accommodations available to patrons of the place of transient lodging. Factors to be considered include room size, cost, amenities provided, and the number of beds provided.

(2) Equivalent Facilitation. For purposes of this section, it shall be deemed equivalent facilitation if the operator of a facility elects to limit construction of accessible rooms to those intended for multiple occupancy, provided that such rooms are made available at the cost of a single-occupancy room to an individual with disabilities who requests a single-occupancy room.

9.1.5. Alterations to Accessible Units, Sleeping Rooms, and Suites. When sleeping rooms are being altered in an existing facility, or portion thereof, subject to the requirements of this section, at least one sleeping room or suite that complies with the requirements of 9.2 (Requirements for Accessible Units, Sleeping Rooms, and Suites) shall be provided for each 25 sleeping rooms, or fraction thereof, of rooms being altered until the number of such rooms provided equals the number required to be accessible with 9.1.2. In addition, at least one sleeping room or suite that complies with the requirements of 9.3 (Visual Alarms, Notification Devices, and Telephones) shall be provided for each 25 sleeping rooms, or fraction thereof, of rooms being altered until the number of such rooms equals the number required to be accessible by 9.1.3.

9.2 Requirements for Accessible Units, Sleeping Rooms and Suites.

9.2.1 General. Units, sleeping rooms, and suites required to be accessible by 9.1 shall comply with 9.2.

9.2.2 Minimum Requirements. An accessible unit, sleeping room or suite shall be on an accessible route complying with 4.3 and have the following accessible elements and spaces.

(1) Accessible sleeping rooms shall have a 36 in (915 mm) clear width maneuvering space located along both sides of a bed, except that where two beds are provided, this requirement can be met by providing a 36 in (915 mm) wide maneuvering space located between the two beds.

(2) An accessible route complying with 4.3 shall connect all accessible spaces and elements, including telephones, within the unit, sleeping room, or suite. This is not intended to require an elevator in multi-story units as long as the spaces identified in 9.2.2(6) and (7) are on accessible levels and the accessible sleeping area is suitable for dual occupancy.

(3) Doors and doorways designed to allow passage into and within all sleeping rooms, suites or other covered units shall comply with 4.13.

(4) If fixed or built-in storage facilities such as cabinets, shelves, closets, and drawers are provided in accessible spaces, at least one of each type provided shall contain storage space complying with 4.25. Additional storage may be provided outside of the dimensions required by 4.25.

(5) All controls in accessible units, sleeping rooms, and suites shall comply with 4.27.

(6) Where provided as part of an accessible unit, sleeping room, or suite, the following spaces shall be accessible and shall be on an accessible route:

(a) the living area.

(b) the dining area.

(c) at least one sleeping area.

(d) patios, terraces, or balconies.

EXCEPTION: The requirements of 4.13.8 and 4.3.8 do not apply where it is necessary to utilize a higher door threshold or a change in level to protect the integrity of the unit from wind/water damage. Where this exception results in patios, terraces or balconies that are not at an accessible level, equivalent facilitation

shall be provided. (E.g., equivalent facilitation at a hotel patio or balcony might consist of providing raised decking or a ramp to provide accessibility.)

(e) at least one full bathroom (i.e., one with a water closet, a lavatory, and a bathtub or shower).

(f) if only half baths are provided, at least one half bath.

(g) carports, garages or parking spaces.

(7) Kitchens, Kitchenettes, or Wet Bars. When provided as accessory to a sleeping room or suite, kitchens, kitchenettes, wet bars, or similar amenities shall be accessible. Clear floor space for a front or parallel approach to cabinets, counters, sinks, and appliances shall be provided to comply with 4.2.4. Countertops and sinks shall be mounted at a maximum height of 34 in (865 mm) above the floor. At least fifty percent of shelf space in cabinets or refrigerator/freezers shall be within the reach ranges of 4.2.5 or 4.2.6 and space shall be designed to allow for the operation of cabinet and/or appliance doors so that all cabinets and appliances are accessible and usable. Controls and operating mechanisms shall comply with 4.27.

(8) Sleeping room accommodations for persons with hearing impairments required by 9.1 and complying with 9.3 shall be provided in the accessible sleeping room or suite.

9.3 Visual Alarms, Notification Devices and Telephones.

9.3.1 General. In sleeping rooms required to comply with this section, auxiliary visual alarms shall be provided and shall comply with 4.28.4. Visual notification devices shall also be provided in units, sleeping rooms and suites to alert room occupants of incoming telephone calls and a door knock or bell. Notification devices shall not be connected to auxiliary visual alarm signal appliances. Permanently installed telephones shall have volume controls complying with 4.31.5; an accessible electrical outlet within 4 ft (1220 mm) of a telephone connection shall be provided to facilitate the use of a text telephone.

9.3.2 Equivalent Facilitation. For purposes of this section, equivalent facilitation shall include the installation of electrical outlets (including outlets connected to a facility's central alarm system) and telephone wiring in sleeping rooms and suites to enable persons with hearing impairments to utilize portable visual alarms and communication devices provided by the operator of the facility.

9.4 Other Sleeping Rooms and Suites.

Doors and doorways designed to allow passage into and within all sleeping units or other covered units shall comply with 4.13.5.

9.5 Transient Lodging in Homeless Shelters, Halfway Houses, Transient Group Homes, and Other Social Service Establishments.

9.5.1 New Construction. In new construction all public use and common use areas are required to be designed and constructed to comply with section 4. At least one of each type of amenity (such as washers, dryers and similar equipment installed for the use of occupants) in each common area shall be accessible and shall be located on an accessible route to any accessible unit or sleeping accommodation.

EXCEPTION: Where elevators are not provided as allowed in 4.1.3(5), accessible amenities are not required on inaccessible floors as long as one of each type is provided in common areas on accessible floors.

9.5.2 Alterations.

(1) Social service establishments which are not homeless shelters:

(a) The provisions of 9.5.3 and 9.1.5 shall apply to sleeping rooms and beds.

(b) Alteration of other areas shall be consistent with the new construction provisions of 9.5.1.

(2) Homeless shelters. If the following elements are altered, the following requirements apply:

(a) at least one public entrance shall allow a person with mobility impairments to approach, enter and exit including a minimum clear door width of 32 in (815 mm).

(b) sleeping space for homeless persons as provided in the scoping provisions of 9.1.2 shall include doors to the sleeping area with a minimum clear width of 32 in (815 mm) and maneuvering space around the beds for persons with mobility impairments complying with 9.2.2(1).

(c) at least one toilet room for each gender or one unisex toilet room shall have a minimum clear door width of 32 in (815 mm), minimum turning space complying with 4.2.3, one water closet complying with 4.16, one lavatory complying with 4.19 and the door shall have a privacy latch; and, if provided, at least one tub or shower shall comply with 4.20 or 4.21, respectively.

(d) at least one common area which a person with mobility impairments can approach, enter and exit including a minimum clear door width of 32 in (815 mm).

(e) at least one route connecting elements (a), (b), (c) and (d) which a person with mobility impairments can use including minimum clear width of 36 in (915 mm), passing space complying with 4.3.4, turning space complying with 4.2.3 and changes in levels complying with 4.3.8.

(f) homeless shelters can comply with the provisions of (a)-(e) by providing the above elements on one accessible floor.

9.5.3. Accessible Sleeping Accommodations in New Construction. Accessible sleeping rooms shall be provided in conformance with the table in 9.1.2 and shall comply with 9.2 Accessible Units, Sleeping Rooms and Suites (where the items are provided). Additional sleeping rooms that comply with 9.3 Sleeping Accommodations for Persons with Hearing Impairments shall be provided in conformance with the table provided in 9.1.3.

In facilities with multi-bed rooms or spaces, a percentage of the beds equal to the table provided in 9.1.2 shall comply with 9.2.2(1).

10. TRANSPORTATION FACILITIES.

10.1 General. Every station, bus stop, bus stop pad, terminal, building or other transportation facility, shall comply with the applicable provisions of 4.1 through 4.35, sections 5 through 9, and the applicable provisions of this section. The exceptions for elevators in 4.1.3(5), exception 1 and 4.1.6(1)(k) do not apply to a terminal, depot, or other station used for specified public transportation, or an airport passenger terminal, or facilities subject to Title II.

10.2 Bus Stops and Terminals.

10.2.1 New Construction.

(1) Where new bus stop pads are constructed at bus stops, bays or other areas where a lift or ramp is to be deployed, they shall have a firm, stable surface; a minimum clear length of 96 inches (measured from the curb or vehicle roadway edge) and a minimum clear width of 60 inches (measured parallel to the vehicle roadway) to the maximum extent allowed by legal or site constraints; and shall be connected to streets, sidewalks or pedestrian paths by an accessible route complying with 4.3 and 4.4. The slope of the pad parallel to the roadway shall, to the extent practicable, be the same as the roadway. For water drainage, a maximum slope of 1:50 (2%) perpendicular to the roadway is allowed.

(2) Where provided, new or replaced bus shelters shall be installed or positioned so as to permit a wheelchair or mobility aid user to enter from the public way and to reach a location, having a minimum clear floor area of 30 inches by 48 inches, entirely within the perimeter of the shelter. Such shelters shall be connected by an accessible route to the boarding area provided under paragraph (1) of this section.

(3) Where provided, all new bus route identification signs shall comply with 4.30.5. In addition, to the maximum extent practicable, all new bus route identification signs shall comply with 4.30.2 and 4.30.3. Signs

10.3 Fixed Facilities and Stations

that are sized to the maximum dimensions permitted under legitimate local, state or federal regulations or ordinances shall be considered in compliance with 4.30.2 and 4.30.3 for purposes of this section.

EXCEPTION: Bus schedules, timetables, or maps that are posted at the bus stop or bus bay are not required to comply with this provision.

10.2.2 Bus Stop Siting and Alterations.

(1) Bus stop sites shall be chosen such that, to the maximum extent practicable, the areas where lifts or ramps are to be deployed comply with section 10.2.1(1) and (2).

(2) When new bus route identification signs are installed or old signs are replaced, they shall comply with the requirements of 10.2.1(3).

10.3 Fixed Facilities and Stations.

10.3.1 New Construction. New stations in rapid rail, light rail, commuter rail, intercity bus, intercity rail, high speed rail, and other fixed guideway systems (e.g., automated guideway transit, monorails, etc.) shall comply with the following provisions, as applicable:

(1) Elements such as ramps, elevators or other circulation devices, fare vending or other ticketing areas, and fare collection areas shall be placed to minimize the distance which wheelchair users and other persons who cannot negotiate steps may have to travel compared to the general public. The circulation path, including an accessible entrance and an accessible route, for persons with disabilities shall, to the maximum extent practicable, coincide with the circulation path for the general public. Where the circulation path is different, signage complying with 4.30.1, 4.30.2, 4.30.3, 4.30.5, and 4.30.7(1) shall be provided to indicate direction to and identify the accessible entrance and accessible route.

(2) In lieu of compliance with 4.1.3(8), at least one entrance to each station shall comply with 4.14, Entrances. If different entrances to a station serve different transportation fixed routes or groups of fixed routes, at least one entrance serving each group or route shall comply with 4.14, Entrances. All accessible entrances shall, to the maximum extent practicable, coincide with those used by the majority of the general public.

(3) Direct connections to commercial, retail, or residential facilities shall have an accessible route complying with 4.3 from the point of connection to boarding platforms and all transportation system elements used by the public. Any elements provided to facilitate future direct connections shall be on an accessible route connecting boarding platforms and all transportation system elements used by the public.

(4) Where signs are provided at entrances to stations identifying the station or the entrance, or both, at least one sign at each entrance shall comply with 4.30.4 and 4.30.6. Such signs shall be placed in uniform locations at entrances within the transit system to the maximum extent practicable.

EXCEPTION: Where the station has no defined entrance, but signage is provided, then the accessible signage shall be placed in a central location.

(5) Stations covered by this section shall have identification signs complying with 4.30.1, 4.30.2, 4.30.3, and 4.30.5. Signs shall be placed at frequent intervals and shall be clearly visible from within the vehicle on both sides when not obstructed by another train. When station identification signs are placed close to vehicle windows (i.e., on the side opposite from boarding) each shall have the top of the highest letter or symbol below the top of the vehicle window and the bottom of the lowest letter or symbol above the horizontal mid-line of the vehicle window.

(6) Lists of stations, routes, or destinations served by the station and located on boarding areas, platforms, or mezzanines shall comply with 4.30.1, 4.30.2, 4.30.3, and 4.30.5. A minimum of one sign identifying the specific station and complying with 4.30.4 and 4.30.6 shall be provided on each platform or boarding area. All signs referenced in this paragraph shall, to the maximum extent practicable, be placed in uniform locations within the transit system.

(7)* Automatic fare vending, collection and adjustment (e.g., add-fare) systems shall comply with 4.34.2, 4.34.3, and 4.34.4. At each accessible entrance such devices shall be located on an accessible route. If self-service fare collection devices are provided for the use of the general public, at least one accessible device for entering, and at least one for exiting, unless one device serves both functions, shall be provided at each accessible point of entry or exit. Accessible fare collection devices shall have a minimum clear opening width of 32 inches; shall permit passage of a wheelchair; and, where provided, coin or card slots and controls necessary for operation shall comply with 4.27. Gates which must be pushed open by wheelchair or mobility aid users shall have a smooth continuous surface extending from 2 inches above the floor to 27 inches above the floor and shall comply with 4.13. Where the circulation path does not coincide with that used by the general public, accessible fare collection systems shall be located at or adjacent to the accessible point of entry or exit.

(8) Platform edges bordering a drop-off and not protected by platform screens or guard rails shall have a detectable warning. Such detectable warnings shall comply with 4.29.2 and shall be 24 inches wide running the full length of the platform drop-off.

(9) In stations covered by this section, rail-to-platform height in new stations shall be coordinated with the floor height of new vehicles so that the vertical difference, measured when the vehicle is at rest, is within plus or minus 5/8 inch under normal passenger load conditions. For rapid rail, light rail, commuter rail, high speed rail, and intercity rail systems in new stations, the horizontal gap, measured when the new vehicle is at rest, shall be no greater than 3 inches. For slow moving automated guideway "people mover" transit systems, the horizontal gap in new stations shall be no greater than 1 inch.

EXCEPTION 1: Existing vehicles operating in new stations may have a vertical difference with respect to the new platform within plus or minus 1-1/2 inches.

EXCEPTION 2: In light rail, commuter rail and intercity rail systems where it is not operationally or structurally feasible to meet the horizontal gap or vertical difference requirements, mini-high platforms, car-borne or platform-mounted lifts, ramps or bridge plates, or similar manually deployed devices, meeting the applicable requirements of 36 CFR part 1192, or 49 CFR part 38 shall suffice.

(10) Stations shall not be designed or constructed so as to require persons with disabilities to board or alight from a vehicle at a location other than one used by the general public.

(11) Illumination levels in the areas where signage is located shall be uniform and shall minimize glare on signs. Lighting along circulation routes shall be of a type and configuration to provide uniform illumination.

(12) Text Telephones: The following shall be provided in accordance with 4.31.9:

(a) If an interior public pay telephone is provided in a transit facility (as defined by the Department of Transportation) at least one interior public text telephone shall be provided in the station.

(b) Where four or more public pay telephones serve a particular entrance to a rail station and at least one is in an interior location, at least one interior public text telephone shall be provided to serve that entrance. Compliance with this section constitutes compliance with section 4.1.3(17)(c).

(13) Where it is necessary to cross tracks to reach boarding platforms, the route surface shall be level and flush with the rail top at the outer edge and between the rails, except for a maximum 2-1/2 inch gap on the inner edge of each rail to permit passage of wheel flanges. Such crossings shall comply with 4.29.5. Where gap reduction is not practicable, an above-grade or below-grade accessible route shall be provided.

(14) Where public address systems are provided to convey information to the public in terminals, stations, or other fixed facilities, a means of conveying the same or equivalent information to persons with hearing loss or who are deaf shall be provided.

10.3.2 Existing Facilities: Key Stations.

(15) Where clocks are provided for use by the general public, the clock face shall be uncluttered so that its elements are clearly visible. Hands, numerals, and/or digits shall contrast with the background either light-on-dark or dark-on-light. Where clocks are mounted overhead, numerals and/or digits shall comply with 4.30.3. Clocks shall be placed in uniform locations throughout the facility and system to the maximum extent practicable.

(16) Where provided in below grade stations, escalators shall have a minimum clear width of 32 inches. At the top and bottom of each escalator run, at least two contiguous treads shall be level beyond the comb plate before the risers begin to form. All escalator treads shall be marked by a strip of clearly contrasting color, 2 inches in width, placed parallel to and on the nose of each step. The strip shall be of a material that is at least as slip resistant as the remainder of the tread. The edge of the tread shall be apparent from both ascending and descending directions.

(17) Where provided, elevators shall be glazed or have transparent panels to allow an unobstructed view both in to and out of the car. Elevators shall comply with 4.10.

EXCEPTION: Elevator cars with a clear floor area in which a 60 inch diameter circle can be inscribed may be substituted for the minimum car dimensions of 4.10, Fig. 22.

(18) Where provided, ticketing areas shall permit persons with disabilities to obtain a ticket and check baggage and shall comply with 7.2.

(19) Where provided, baggage check-in and retrieval systems shall be on an accessible route complying with 4.3, and shall have space immediately adjacent complying with 4.2. If unattended security barriers are provided, at least one gate shall comply with 4.13. Gates which must be pushed open by wheelchair or mobility aid users shall have a smooth continuous surface extending from 2 inches above the floor to 27 inches above the floor.

10.3.2 Existing Facilities: Key Stations.

(1) Rapid, light and commuter rail key stations, as defined under criteria established by the Department of Transportation in subpart C of 49 CFR part 37 and existing intercity rail stations shall provide at least one accessible route from an accessible entrance to those areas necessary for use of the transportation system.

(2) The accessible route required by 10.3.2(1) shall include the features specified in 10.3.1 (1), (4)-(9), (11)-(15), and (17)-(19).

(3) Where technical infeasibility in existing stations requires the accessible route to lead from the public way to a paid area of the transit system, an accessible fare collection system, complying with 10.3.1(7), shall be provided along such accessible route.

(4) In light rail, rapid rail and commuter rail key stations, the platform or a portion thereof and the vehicle floor shall be coordinated so that the vertical difference, measured when the vehicle is at rest, within plus or minus 1-1/2 inches under all normal passenger load conditions, and the horizontal gap, measured when the vehicle is at rest, is no greater than 3 inches for at least one door of each vehicle or car required to be accessible by 49 CFR part 37.

EXCEPTION 1: Existing vehicles retrofitted to meet the requirements of 49 CFR 37.93 (one-car-per-train rule) shall be coordinated with the platform such that, for at least one door, the vertical difference between the vehicle floor and the platform, measured when the vehicle is at rest with 50% normal passenger capacity, is within plus or minus 2 inches and the horizontal gap is no greater than 4 inches.

EXCEPTION 2: Where it is not structurally or operationally feasible to meet the horizontal gap or vertical difference requirements, mini-high platforms, car-borne or platform mounted lifts, ramps or bridge plates, or similar manually deployed devices, meeting the applicable requirements of 36 CFR Part 1192 shall suffice.

(5) New direct connections to commercial, retail, or residential facilities shall, to the maximum extent feasible, have an accessible route complying with 4.3 from the point of connection to boarding platforms and all transportation system elements used by the public. Any elements provided to facilitate future direct connections shall be on an accessible route connecting boarding platforms and all transportation system elements used by the public.

10.3.3 Existing Facilities: Alterations.

(1) For the purpose of complying with 4.1.6(2) Alterations to an Area Containing a Primary Function, an area of primary function shall be as defined by applicable provisions of 49 CFR 37.43(c) (Department of Transportation's ADA Rule) or 28 CFR 36.403 (Department of Justice's ADA Rule).

10.4. Airports.

10.4.1 New Construction.

(1) Elements such as ramps, elevators or other vertical circulation devices, ticketing areas, security checkpoints, or passenger waiting areas shall be placed to minimize the distance which wheelchair users and other persons who cannot negotiate steps may have to travel compared to the general public.

(2) The circulation path, including an accessible entrance and an accessible route, for persons with disabilities shall, to the maximum extent practicable, coincide with the circulation path for the general public. Where the circulation path is different, directional signage complying with 4.30.1, 4.30.2, 4.30.3 and 4.30.5 shall be provided which indicates the location of the nearest accessible entrance and its accessible route.

(3) Ticketing areas shall permit persons with disabilities to obtain a ticket and check baggage and shall comply with 7.2.

(4) Where public pay telephones are provided, and at least one is at an interior location, a public text telephone shall be provided in compliance with 4.31.9. Additionally, if four or more public pay telephones are located in any of the following locations, at least one public text telephone shall also be provided in that location:

(a) a main terminal outside the security areas;
(b) a concourse within the security areas; or
(c) a baggage claim area in a terminal.

Compliance with this section constitutes compliance with section 4.1.3(17)(c).

(5) Baggage check-in and retrieval systems shall be on an accessible route complying with 4.3, and shall have space immediately adjacent complying with 4.2.4. If unattended security barriers are provided, at least one gate shall comply with 4.13. Gates which must be pushed open by wheelchair or mobility aid users shall have a smooth continuous surface extending from 2 inches above the floor to 27 inches above the floor.

(6) Terminal information systems which broadcast information to the general public through a public address system shall provide a means to provide the same or equivalent information to persons with a hearing loss or who are deaf. Such methods may include, but are not limited to, visual paging systems using video monitors and computer technology. For persons with certain types of hearing loss such methods may include, but are not limited to, an assistive listening system complying with 4.33.7.

(7) Where clocks are provided for use by the general public the clock face shall be uncluttered so that its elements are clearly visible. Hands, numerals, and/or digits shall contrast with their background either light-on-dark or dark-on-light. Where clocks are mounted overhead, numerals and/or digits shall comply with 4.30.3. Clocks shall be placed in uniform locations throughout the facility to the maximum extent practicable.

(8) Security Systems. [Reserved]

10.5 Boat and Ferry Docks.

[Reserved]

APPENDIX

This appendix contains *materials of an advisory nature* and provides additional information that should help the reader to understand the minimum requirements of the *guidelines* or to design buildings or facilities for greater accessibility. The paragraph numbers correspond to the sections or paragraphs of the *guideline* to which the material relates and are therefore not consecutive (for example, A4.2.1 contains additional information relevant to 4.2.1). Sections *of the guidelines* for which additional material appears in this appendix have been indicated by an asterisk. *Nothing in this appendix shall in any way obviate any obligation to comply with the requirements of the guidelines itself.*

A2.2 Equivalent Facilitation. *Specific examples of equivalent facilitation are found in the following sections:*

4.1.6(3)(c)	*Elevators in Alterations*
4.31.9	*Text Telephones*
7.2	*Sales and Service Counters, Teller Windows, Information Counters*
9.1.4	*Classes of Sleeping Accommodations*
9.2.2(6)(d)	*Requirements for Accessible Units, Sleeping Rooms, and Suites*

A4.1.1 Application.

A4.1.1(3) Areas Used Only by Employees as Work Areas. *Where there are a series of individual work stations of the same type (e.g., laboratories, service counters, ticket booths), 5%, but not less than one, of each type of work station should be constructed so that an individual with disabilities can maneuver within the work stations. Rooms housing individual offices in a typical office building must meet the requirements of the guidelines concerning doors, accessible routes, etc. but do not need to allow for maneuvering space around individual desks. Modifications required to permit maneuvering within the work area may be accomplished as a reasonable accommodation to individual employees with disabilities under Title I of the ADA. Consideration should also be given to placing shelves in employee work areas at a convenient height for accessibility or installing commercially available shelving that is adjustable so that reasonable accommodations can be made in the future.*

If work stations are made accessible they should comply with the applicable provisions of 4.2 through 4.35.

A4.1.2 Accessible Sites and Exterior Facilities: New Construction.

A4.1.2(5)(e) Valet Parking. *Valet parking is not always usable by individuals with disabilities. For instance, an individual may use a type of vehicle controls that render the regular controls inoperable or the driver's seat in a van may be removed. In these situations, another person cannot park the vehicle. It is recommended that some self-parking spaces be provided at valet parking facilities for individuals whose vehicles cannot be parked by another person and that such spaces be located on an accessible route to the entrance of the facility.*

A4.1.3 Accessible Buildings: New Construction.

A4.1.3(5) *Only full passenger elevators are covered by the accessibility provisions of 4.10. Materials and equipment hoists, freight elevators not intended for passenger use, dumbwaiters, and construction elevators are not covered by these guidelines. If a building is exempt from the elevator requirement, it is not necessary to provide a platform lift or other means of vertical access in lieu of an elevator.*

Under Exception 4, platform lifts are allowed where existing conditions make it impractical to install a ramp or elevator. Such conditions generally occur where it is essential to provide access to small raised or lowered areas where space may not be available for a ramp. Examples include, but are not limited to, raised pharmacy platforms, commercial offices raised above a sales floor, or radio and news booths.

A4.1.3(9) *Supervised automatic sprinkler systems have built in signals for monitoring features of the system such as the opening and closing of water control valves, the power supplies for needed pumps, water tank levels, and for indicating conditions that will impair the satisfactory operation of the sprinkler system.*

Because of these monitoring features, supervised automatic sprinkler systems have a high level of satisfactory performance and response to fire conditions.

A4.1.3(10) *If an odd number of drinking fountains is provided on a floor, the requirement in 4.1.3(10)(b) may be met by rounding down the odd number to an even number and calculating 50% of the even number. When more than one drinking fountain on a floor is required to comply with 4.15, those fountains should be dispersed to allow wheelchair users convenient access. For example, in a large facility such as a convention center that has water fountains at several locations on a floor, the accessible water fountains should be located so that wheelchair users do not have to travel a greater distance than other people to use a drinking fountain.*

A4.1.3(17)(b) *In addition to the requirements of section 4.1.3(17)(b), the installation of additional volume controls is encouraged. Volume controls may be installed on any telephone.*

A4.1.3(19)(a) *Readily removable or folding seating units may be installed in lieu of providing an open space for wheelchair users. Folding seating units are usually two fixed seats that can be easily folded into a fixed center bar to allow for one or two open spaces for wheelchair users when necessary. These units are more easily adapted than removable seats which generally require the seat to be removed in advance by the facility management.*

Either a sign or a marker placed on seating with removable or folding arm rests is required by this section. Consideration should be given for ensuring identification of such seats in a darkened theater. For example, a marker which contrasts (light on dark or dark on light) and which also reflects light could be placed on the side of such seating so as to be visible in a lighted auditorium and also to reflect light from a flashlight.

A4.1.6 Accessible Buildings: Alterations.

A4.1.6(1)(h) *When an entrance is being altered, it is preferable that those entrances being altered be made accessible to the extent feasible.*

A4.2 Space Allowances and Reach Ranges.

A4.2.1 Wheelchair Passage Width.

(1) Space Requirements for Wheelchairs. Many persons who use wheelchairs need a 30 in (760 mm) clear opening width for doorways, gates, and the like, when the latter are entered head-on. If the *person* is unfamiliar with a building, if competing traffic is heavy, if sudden or frequent movements are needed, or if the wheelchair must be turned at an opening, then greater clear widths are needed. For most situations, the addition of an inch of leeway on either side is sufficient. Thus, a minimum clear width of 32 in (815 mm) will provide adequate clearance. However, when an opening or a restriction in a passageway is more than 24 in (610 mm) long, it is essentially a passageway and must be at least 36 in (915 mm) wide.

(2) Space Requirements for Use of Walking Aids. Although people who use walking aids can maneuver through clear width openings of 32 in (815 mm), they need 36 in (915 mm) wide passageways and walks for comfortable gaits. Crutch tips, often extending down at a wide angle, are a hazard in narrow passageways where they might not be seen by other pedestrians. Thus, the 36 in (915 mm) width provides a safety allowance both for the person *with a disability* and for others.

(3) Space Requirements for Passing. Able-bodied *persons* in winter clothing, walking

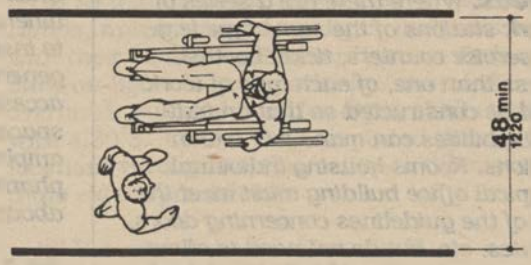

Fig. A1
Minimum Passage Width for One Wheelchair and One Ambulatory Person

A4.2 Space Allowances and Reach Ranges

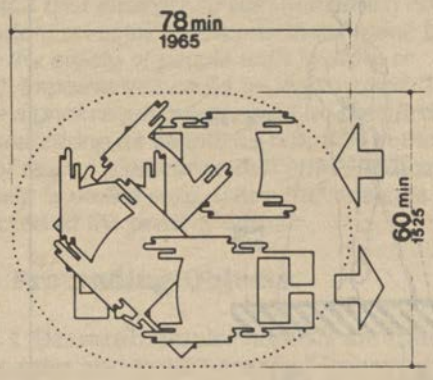

Fig. A2
Space Needed for Smooth U-Turn in a Wheelchair

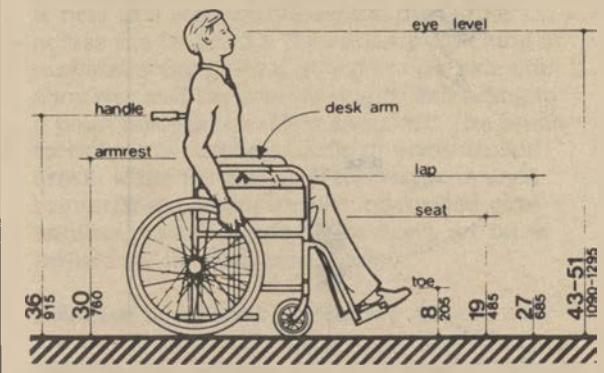

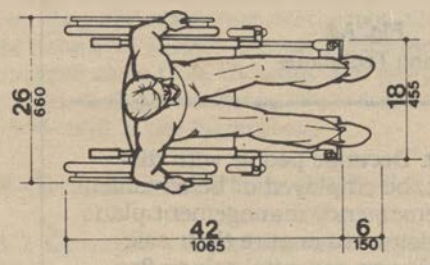

NOTE: Footrests may extend further for tall people

Fig. A3
Dimensions of Adult-Sized Wheelchairs

straight ahead with arms swinging, need 32 in (815 mm) of width, which includes 2 in (50 mm) on either side for sway, and another 1 in (25 mm) tolerance on either side for clearing nearby objects or other pedestrians. Almost all wheelchair users and those who use walking aids can also manage within this 32 in (815 mm) width for short distances. Thus, two streams of traffic can pass in 64 in (1625 mm) in a comfortable flow. Sixty inches (1525 mm) provides a minimum width for a somewhat more restricted flow. If the clear width is less than 60 in (1525 mm), two wheelchair users will not be able to pass but will have to seek a wider place for passing. Forty-eight inches (1220 mm) is the minimum width needed for an ambulatory person to pass a nonambulatory or semi-ambulatory person. Within this 48 in (1220 mm) width, the ambulatory person will have to twist to pass a wheelchair user, a person with a *service animal*, or a

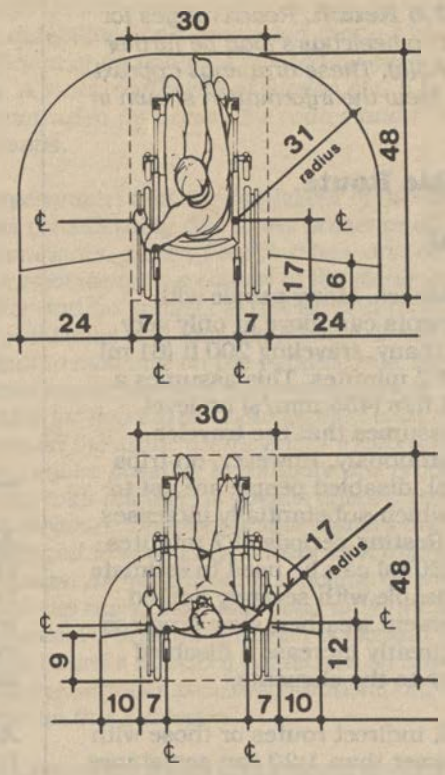

Fig. A3 (a)

A4.3 Accessible Route

semi-ambulatory person. There will be little leeway for swaying or missteps (see Fig. A1).

A4.2.3 Wheelchair Turning Space. *These guidelines specify* a minimum space of 60 in (1525 mm) diameter *or a 60 in by 60 in (1525 mm by 1525 mm) T-shaped space* for a pivoting 180-degree turn of a wheelchair. This space is usually satisfactory for turning around, but many people will not be able to turn without repeated tries and bumping into surrounding objects. The space shown in Fig. A2 will allow most wheelchair users to complete U-turns without difficulty.

A4.2.4 Clear Floor or Ground Space for Wheelchairs. The wheelchair and user shown in Fig. A3 represent typical dimensions for a large adult male. The space requirements in this *guideline* are based upon maneuvering clearances that will accommodate most wheelchairs. Fig. A3 provides a uniform reference for design not covered by this *guideline*.

A4.2.5 & A4.2.6 Reach. *Reach ranges for persons seated in wheelchairs may be further clarified by Fig. A3(a). These drawings approximate in the plan view the information shown in Fig. 4, 5, and 6.*

A4.3 Accessible Route.

A4.3.1 General.

(1) Travel Distances. Many people with mobility impairments can move at only very slow speeds; for many, traveling 200 ft (61 m) could take about 2 minutes. This assumes a rate of about 1.5 ft/s (455 mm/s) on level ground. It also assumes that the traveler would move continuously. However, on trips over 100 ft (30 m), disabled people are apt to rest frequently, which substantially increases their trip times. Resting periods of 2 minutes for every 100 ft (30 m) can be used to estimate travel times for people with severely limited stamina. In inclement weather, slow progress and resting can greatly increase a disabled person's exposure to the elements.

(2) Sites. Level, indirect routes or those with running slopes lower than 1:20 can sometimes provide more convenience than direct routes with maximum allowable slopes or with ramps.

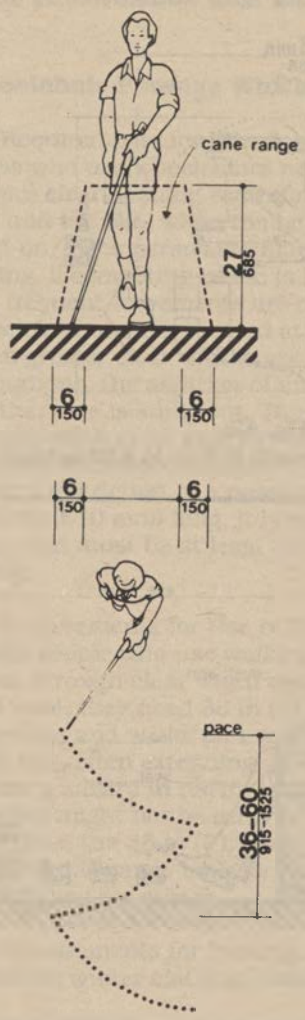

Fig. A4
Cane Technique

A4.3.10 Egress. Because people with disabilities may visit, be employed or be a resident in any building, emergency management plans with specific provisions to ensure their safe evacuation also play an essential role in fire safety and life safety.

A4.3.11.3 Stairway Width. *A 48 inch (1220 mm) wide exit stairway is needed to allow assisted evacuation (e.g., carrying a person in a wheelchair) without encroaching on the exit path for ambulatory persons.*

A4.3.11.4 Two-way Communication. *It is essential that emergency communication not be dependent on voice communications alone because the safety of people with hearing or speech impairments could be jeopardized. The visible signal requirement could be satisfied with something as simple as a button in the area of rescue assistance that lights, indicating that help is on the way, when the message is answered at the point of entry.*

A4.4 Protruding Objects.

A4.4.1 General. *Service animals* are trained to recognize and avoid hazards. However, most people with severe impairments of vision use the long cane as an aid to mobility. The two principal cane techniques are the touch technique, where the cane arcs from side to side and touches points outside both shoulders; and the diagonal technique, where the cane is held in a stationary position diagonally across the body with the cane tip touching or just above the ground at a point outside one shoulder and the handle or grip extending to a point outside the other shoulder. The touch technique is used primarily in uncontrolled areas, while the diagonal technique is used primarily in certain limited, controlled, and familiar environments. Cane users are often trained to use both techniques.

Potential hazardous objects are noticed only if they fall within the detection range of canes (see Fig. A4). Visually impaired people walking toward an object can detect an overhang if its lowest surface is not higher than 27 in (685 mm). When walking alongside *protruding* objects, they cannot detect overhangs. Since proper cane and *service animal* techniques keep people away from the edge of a path or from walls, a slight overhang of no more than 4 in (100 mm) is not hazardous.

A4.5 Ground and Floor Surfaces.

A4.5.1 General. *People who have difficulty walking or* maintaining balance *or who use crutches, canes, or walkers,* and those with restricted gaits are particularly sensitive to slipping and tripping hazards. For such people, a stable and regular surface is necessary for safe walking, particularly on stairs. Wheelchairs can be propelled most easily on surfaces that are hard, stable, and regular. Soft loose surfaces such as shag carpet, loose sand or gravel, wet clay, and irregular surfaces such as cobblestones can significantly impede wheelchair movement.

Slip resistance is based on the frictional force necessary to keep a shoe heel or crutch tip from slipping on a walking surface under conditions likely to be found on the surface. *While the dynamic coefficient of friction during walking varies in a complex and non-uniform way, the static coefficient of friction, which can be measured in several ways, provides a close approximation of the slip resistance of a surface. Contrary to popular belief, some slippage is necessary to walking, especially for persons with restricted gaits; a truly "non-slip" surface could not be negotiated.*

The Occupational Safety and Health Administration recommends that walking surfaces have a static coefficient of friction of 0.5. A research project sponsored by the Architectural and Transportation Barriers Compliance Board (Access Board) conducted tests with persons with disabilities and concluded that a higher coefficient of friction was needed by such persons. A static coefficient of friction of 0.6 is recommended for accessible routes and 0.8 for ramps.

It is recognized that the coefficient of friction varies considerably due to the presence of contaminants, water, floor finishes, and other factors not under the control of the designer or builder and not subject to design and construction guidelines and that compliance would be difficult to measure on the building site. Nevertheless, many common building materials suitable for flooring are now labeled with information on the static coefficient of friction. While it may not be possible to compare one product directly with another, or to guarantee a constant measure, builders and designers are encouraged to specify materials with appropriate values. As more products include information on slip resistance, improved uniformity in measurement and specification is likely. The Access Board's advisory guidelines on Slip Resistant Surfaces provides additional information on this subject.

Cross slopes on walks and ground or floor surfaces can cause considerable difficulty in propelling a wheelchair in a straight line.

A4.6 Parking and Passenger Loading Zones

A4.5.3 Carpet. Much more needs to be done in developing both quantitative and qualitative criteria for carpeting *(i.e., problems associated with texture and weave need to be studied).* However, certain functional characteristics are well established. When both carpet and padding are used, it is desirable to have minimum movement (preferably none) between the floor and the pad and the pad and the carpet which would allow the carpet to hump or warp. In heavily trafficked areas, a thick, soft (plush) pad or cushion, particularly in combination with long carpet pile, makes it difficult for individuals in wheelchairs and those with other ambulatory disabilities to get about. Firm carpeting can be achieved through proper selection and combination of pad and carpet, sometimes with the elimination of the pad or cushion, and with proper installation. *Carpeting designed with a weave that causes a zig-zag effect when wheeled across is strongly discouraged.*

A4.6 Parking and Passenger Loading Zones.

A4.6.3 Parking Spaces. *The increasing use of vans with side-mounted lifts or ramps by persons with disabilities has necessitated some revisions in specifications for parking spaces and adjacent access aisles. The typical accessible parking space is 96 in (2440 mm) wide with an adjacent 60 in (1525 mm) access aisle. However, this aisle does not permit lifts or ramps to be deployed and still leave room for a person using a wheelchair or other mobility aid to exit the lift platform or ramp. In tests conducted with actual lift/van/wheelchair combinations, (under a Board-sponsored Accessible Parking and Loading Zones Project) researchers found that a space and aisle totaling almost 204 in (5180 mm) wide was needed to deploy a lift and exit conveniently. The "van accessible" parking space required by these guidelines provides a 96 in (2440 mm) wide space with a 96 in (2440 mm) adjacent access aisle which is just wide enough to maneuver and exit from a side mounted lift. If a 96 in (2440 mm) access aisle is placed between two spaces, two "van accessible" spaces are created. Alternatively, if the wide access aisle is provided at the end of a row (an area often unused), it may be possible to provide the wide access aisle without additional space (see Fig. A5(a)).*

A sign is needed to alert van users to the presence of the wider aisle, but the space is not intended to be restricted only to vans.

"Universal" Parking Space Design. An alternative to the provision of a percentage of spaces with a wide aisle, and the associated need to include additional signage, is the use of what has been called the "universal" parking space design. Under this design, all accessible spaces are 132 in (3350 mm) wide with a 60 in (1525 mm) access aisle (see Fig. A5(b)). One

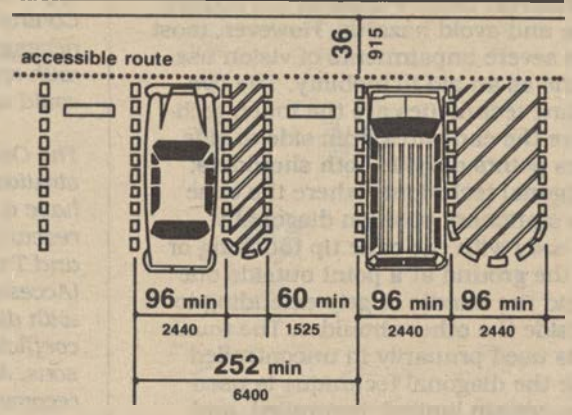

(a)
Van Accessible Space at End Row

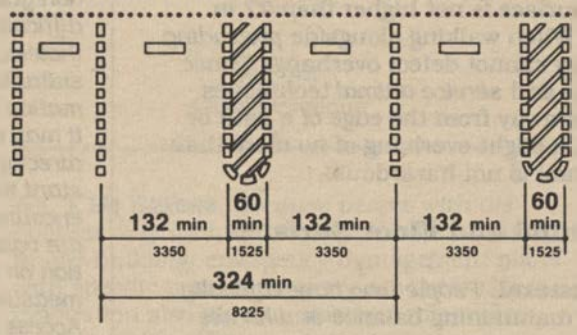

(b)
Universal Parking Space Design

Fig. A5
Parking Space Alternatives

advantage to this design is that no additional signage is needed because all spaces can accommodate a van with a side-mounted lift or ramp. Also, there is no competition between cars and vans for spaces since all spaces can accommodate either. Furthermore, the wider space permits vehicles to park to one side or the other within the 132 in (3350 mm) space to allow persons to exit and enter the vehicle on either the driver or passenger side, although, in some cases, this would require exiting or entering without a marked access aisle.

An essential consideration for any design is having the access aisle level with the parking space. Since a person with a disability, using a lift or ramp, must maneuver within the access aisle, the aisle cannot include a ramp or sloped area. The access aisle must be connected to an accessible route to the appropriate accessible entrance of a building or facility. The parking access aisle must either blend with the accessible route or have a curb ramp complying with 4.7. Such a curb ramp opening must be located within the access aisle boundaries, not within the parking space boundaries. Unfortunately, many facilities are designed with a ramp that is blocked when any vehicle parks in the accessible space. Also, the required dimensions of the access aisle cannot be restricted by planters, curbs or wheel stops.

A4.6.4 Signage. Signs designating parking places for disabled people can be seen from a driver's seat if the signs are mounted high enough above the ground and located at the front of a parking space.

A4.6.5 Vertical Clearance. High-top vans, which disabled people or transportation services often use, require higher clearances in parking garages than automobiles.

A4.8 Ramps.

A4.8.1 General. Ramps are essential for wheelchair users if elevators or lifts are not available to connect different levels. However, some people who use walking aids have difficulty with ramps and prefer stairs.

A4.8.2 Slope and Rise. *Ramp slopes between 1:16 and 1:20 are preferred.* The ability to manage an incline is related to both its slope and its length. Wheelchair users with disabilities affecting *their* arms or with low stamina have serious difficulty using inclines. Most ambulatory people and most people who use wheelchairs can manage a slope of 1:16. Many people cannot manage a slope of 1:12 for 30 ft (9 m).

A4.8.4 Landings. *Level landings are essential toward maintaining an aggregate slope that complies with these guidelines. A ramp landing that is not level causes individuals using wheelchairs to tip backward or bottom out when the ramp is approached.*

A4.8.5 Handrails. The requirements for stair and ramp handrails in this *guideline* are for adults. When children are principal users in a building or facility, a second set of handrails at an appropriate height can assist them and aid in preventing accidents.

A4.9 Stairs.

A4.9.1 Minimum Number. *Only interior and exterior stairs connecting levels that are not connected by an elevator, ramp, or other accessible means of vertical access have to comply with 4.9.*

A4.10 Elevators.

A4.10.6 Door Protective and Reopening Device. The required door reopening device would hold the door open for 20 seconds if the doorway remains obstructed. After 20 seconds, the door may begin to close. However, if designed in accordance with *ASME A17.1-1990*, the door closing movement could still be stopped if a person or object exerts sufficient force at any point on the door edge.

A4.10.7 Door and Signal Timing for Hall Calls. This paragraph allows variation in the location of call buttons, advance time for warning signals, and the door-holding period used to meet the time requirement.

A4.10.12 Car Controls. Industry-wide standardization of elevator control panel design would make all elevators significantly more convenient for use by people with severe visual impairments. In many cases, it will be possible to locate the highest control on elevator panels within 48 in (1220 mm) from the floor.

A4.10.13 Car Position Indicators. A special button may be provided that would activate the audible signal within the given elevator only for the desired trip, rather than maintaining the audible signal in constant operation.

A4.10.14 Emergency Communications. A device that requires no handset is easier to use by people who have difficulty reaching. *Also, small handles on handset compartment doors are not usable by people who have difficulty grasping.*

Ideally, emergency two-way communication systems should provide both voice and visual display intercommunication so that persons with hearing impairments and persons with vision impairments can receive information regarding the status of a rescue. A voice intercommunication system cannot be the only means of communication because it is not accessible to people with speech and hearing impairments. While a voice intercommunication system is not required, at a minimum, the system should provide both an audio and visual indication that a rescue is on the way.

A4.11 Platform Lifts *(Wheelchair Lifts)*.

A4.11.2 Other Requirements. *Inclined stairway chairlifts, and inclined and vertical platform lifts (wheelchair lifts) are available* for short-distance, vertical transportation of people with disabilities. Care should be taken in selecting lifts *as some lifts are not equally suitable for use by both wheelchair users and semi-ambulatory individuals.*

A4.12 Windows.

A4.12.1 General. *Windows intended to be operated by occupants in accessible spaces should comply with 4.12.*

A4.12.2 Window Hardware. *Windows requiring pushing, pulling, or lifting to open (for example, double-hung, sliding, or casement and awning units without cranks) should require no more than 5 lbf (22.2 N) to open or close. Locks, cranks, and other window hardware should comply with 4.27.*

A4.13 Doors.

A4.13.8 Thresholds at Doorways. Thresholds and surface height changes in doorways are particularly inconvenient for wheelchair users who also have low stamina or restrictions in arm movement because complex maneuvering is required to get over the level change while operating the door.

A4.13.9 Door Hardware. Some disabled persons must push against a door with their chair or walker to open it. Applied kickplates on doors with closers can reduce required maintenance by withstanding abuse from wheelchairs and canes. To be effective, they should cover the door width, less approximately 2 in (51 mm), up to a height of 16 in (405 mm) from its bottom edge and be centered across the *width of the door.*

A4.13.10 Door Closers. Closers with delayed action features give a person more time to maneuver through doorways. They are particularly useful on frequently used interior doors such as entrances to toilet rooms.

A4.13.11 Door Opening Force. Although most people with disabilities can exert at least 5 lbf (22.2N), both pushing and pulling from a stationary position, a few people with severe disabilities cannot exert 3 lbf (13.13N). Although some people cannot manage the allowable forces in this guideline and many others have difficulty, door closers must have certain minimum closing forces to close doors satisfactorily. Forces for pushing or pulling doors open are measured with a push-pull scale under the following conditions:

(1) Hinged doors: Force applied perpendicular to the door at the door opener or 30 in (760 mm) from the hinged side, whichever is farther from the hinge.

(2) Sliding or folding doors: Force applied parallel to the door at the door pull or latch.

(3) Application of force: Apply force gradually so that the applied force does not exceed the resistance of the door. In high-rise buildings, air-pressure differentials may require a modification of this specification in order to meet the functional intent.

A4.13.12 Automatic Doors and Power-Assisted Doors. Sliding automatic doors do not need guard rails and are more convenient for wheelchair users and visually impaired people to use. If slowly opening automatic doors can be reactivated before their closing cycle is completed, they will be more convenient in busy doorways.

A4.15 Drinking Fountains and Water Coolers.

A4.15.2 Spout Height. *Two drinking fountains, mounted side by side or on a single post, are usable by people with disabilities and people who find it difficult to bend over.*

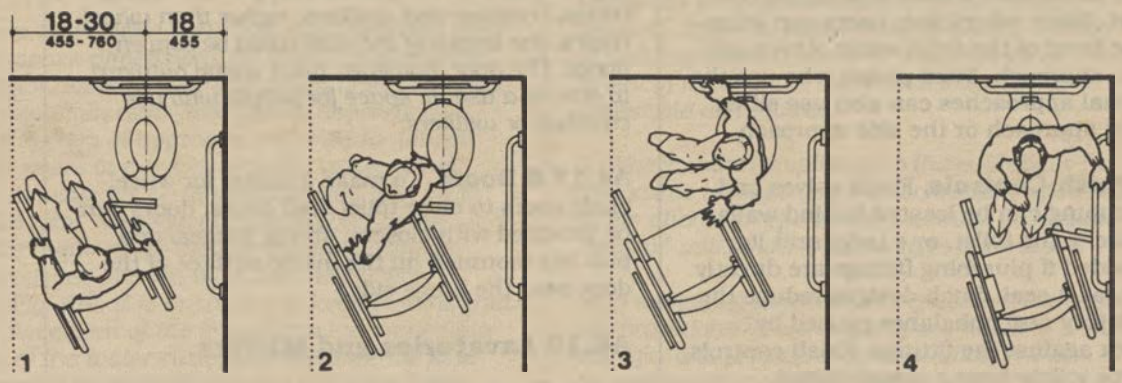

Takes transfer position, swings footrest out of the way, sets brakes.

Removes armrest, transfers.

Moves wheelchair out of the way, changes position (some people fold chair or pivot it 90° to the toilet).

Positions on toilet, releases brake.

(a)
Diagonal Approach

Takes transfer position, removes armrest, sets brakes.

Transfers.

Positions on toilet.

(b)
Side Approach

Fig. A6
Wheelchair Transfers

A4.16 Water Closets.

A4.16.3 Height. Height preferences for toilet seats vary considerably among disabled people. Higher seat heights may be an advantage to some ambulatory disabled people, but are often a disadvantage for wheelchair users and others. Toilet seats 18 in (455 mm) high seem to be a reasonable compromise. Thick seats and filler rings are available to adapt standard fixtures to these requirements.

A4.16.4 Grab Bars. Fig. A6(a) and (b) show the diagonal and side approaches most commonly used to transfer from a wheelchair to a water closet. Some wheelchair users can transfer from the front of the toilet while others use a 90-degree approach. Most people who use the two additional approaches can also use either the diagonal approach or the side approach.

A4.16.5 Flush Controls. Flush valves and related plumbing can be located behind walls or to the side of the toilet, or a toilet seat lid can be provided if plumbing fittings are directly behind the toilet seat. Such designs reduce the chance of injury and imbalance caused by leaning back against the fittings. Flush controls for tank-type toilets have a standardized mounting location on the left side of the tank (facing the tank). Tanks can be obtained by special order with controls mounted on the right side. If administrative authorities require flush controls for flush valves to be located in a position that conflicts with the location of the rear grab bar, then that bar may be split or shifted toward the wide side of the toilet area.

A4.17 Toilet Stalls.

A4.17.3 Size and Arrangement. *This section requires use of the 60 in (1525 mm) standard stall (Figure 30(a)) and permits the 36 in (915 mm) or 48 in (1220 mm) wide alternate stall (Figure 30(b)) only in alterations where provision of the standard stall is technically infeasible or where local plumbing codes prohibit reduction in the number of fixtures. A standard stall provides a clear space on one side of the water closet to enable persons who use wheelchairs to perform a side or diagonal transfer from the wheelchair to the water closet. However, some persons with disabilities who use mobility aids such as walkers, canes or crutches are better able to use the two parallel grab bars in the 36 in (915 mm) wide alternate stall to achieve a standing position.*

In large toilet rooms, where six or more toilet stalls are provided, it is therefore required that a 36 in (915 mm) wide stall with parallel grab bars be provided in addition to the standard stall required in new construction. The 36 in (915 mm) width is necessary to achieve proper use of the grab bars; wider stalls would position the grab bars too far apart to be easily used and narrower stalls would position the grab bars too close to the water closet. Since the stall is primarily intended for use by persons using canes, crutches and walkers, rather than wheelchairs, the length of the stall could be conventional. The door, however, must swing outward to ensure a usable space for people who use crutches or walkers.

A4.17.5 Doors. To make it easier for wheelchair users to close toilet stall doors, doors can be provided with closers, spring hinges, or a pull bar mounted on the inside surface of the door near the hinge side.

A4.19 Lavatories and Mirrors.

A4.19.6 Mirrors. If mirrors are to be used by both ambulatory people and wheelchair users, then they must be at least 74 in (1880 mm) high at their topmost edge. A single full length mirror can accommodate all people, including children.

A4.21 Shower Stalls.

A4.21.1 General. Shower stalls that are 36 in by 36 in (915 mm by 915 mm) wide provide additional safety to people who have difficulty maintaining balance because all grab bars and walls are within easy reach. Seated people use the walls of 36 in by 36 in (915 mm by 915 mm) showers for back support. Shower stalls that are 60 in (1525 mm) wide and have no curb may increase usability of a bathroom by wheelchair users because the shower area provides additional maneuvering space.

A4.22 Toilet Rooms.

A4.22.3 Clear Floor Space. *In many small facilities, single-user restrooms may be the only*

A4.22 Toilet Rooms

facilities provided for all building users. In addition, the guidelines allow the use of "unisex" or "family" accessible toilet rooms in alterations when technical infeasibility can be demonstrated. Experience has shown that the provision of accessible "unisex" or single-user restrooms is a reasonable way to provide access for wheelchair users and any attendants, especially when attendants are of the opposite sex. Since these facilities have proven so useful, it is often considered advantageous to install a "unisex" toilet room in new facilities in addition to making the multi-stall restrooms accessible, especially in shopping malls, large auditoriums, and convention centers.

Figure 28 (section 4.16) provides minimum clear floor space dimensions for toilets in accessible "unisex" toilet rooms. The dotted lines designate the minimum clear floor space, depending on the direction of approach, required for wheelchair users to transfer onto the water closet. The dimensions of 48 in (1220 mm) and 60 in (1525 mm), respectively, correspond to the space required for the two common transfer approaches utilized by wheelchair users (see Fig. A6). It is important to keep in mind that the placement of the lavatory to the immediate side of the water closet will preclude the side approach transfer illustrated in Figure A6(b).

To accommodate the side transfer, the space adjacent to the water closet must remain clear of obstruction for 42 in (1065 mm) from the centerline of the toilet (Figure 28) and the lavatory must not be located within this clear space. A turning circle or T-turn, the clear floor space at the lavatory, and maneuvering space at the door must be considered when determining the possible wall locations. A privacy latch or other accessible means of ensuring privacy during use should be provided at the door.

RECOMMENDATIONS:

1. In new construction, accessible single-user restrooms may be desirable in some situations because they can accommodate a wide variety of building users. However, they cannot be used in lieu of making the multi-stall toilet rooms accessible as required.

2. Where strict compliance to the guidelines for accessible toilet facilities is technically infeasible in the alteration of existing facilities, accessible "unisex" toilets are a reasonable alternative.

3. In designing accessible single-user restrooms, the provisions of adequate space to allow a side transfer will provide accommodation to the largest number of wheelchair users.

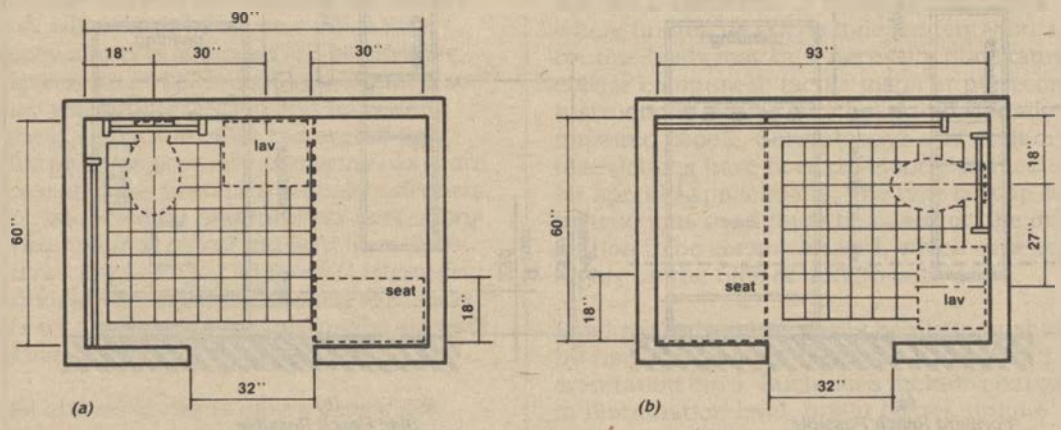

Fig. A7

A4.23 Bathrooms, Bathing Facilities, and Shower Rooms.

A4.23.3 Clear Floor Space. *Figure A7 shows two possible configurations of a toilet room with a roll-in shower. The specific shower shown is designed to fit exactly within the dimensions of a standard bathtub. Since the shower does not have a lip, the floor space can be used for required maneuvering space. This would permit a toilet room to be smaller than would be permitted with a bathtub and still provide enough floor space to be considered accessible. This design can provide accessibility in facilities where space is at a premium (i.e., hotels and medical care facilities). The alternate roll-in shower (Fig. 57b) also provides sufficient room for the "T-turn" and does not require plumbing to be on more than one wall.*

A4.23.9 Medicine Cabinets. Other alternatives for storing medical and personal care items are very useful to disabled people. Shelves, drawers, and floor-mounted cabinets can be provided within the reach ranges of disabled people.

A4.26 Handrails, Grab Bars, and Tub and Shower Seats.

A4.26.1 General. Many disabled people rely heavily upon grab bars and handrails to maintain balance and prevent serious falls. Many people brace their forearms between supports and walls to give them more leverage and stability in maintaining balance or for lifting. The grab bar clearance of 1-1/2 in (38 mm) required in this guideline is a safety clearance to prevent injuries resulting from arms slipping through the openings. It also provides adequate gripping room.

A4.26.2 Size and Spacing of Grab Bars and Handrails. This specification allows for alternate shapes of handrails as long as they allow an opposing grip similar to that provided by a circular section of 1-1/4 in to 1-1/2 in (32 mm to 38 mm).

A4.27 Controls and Operating Mechanisms.

A4.27.3 Height. *Fig. A8 further illustrates*

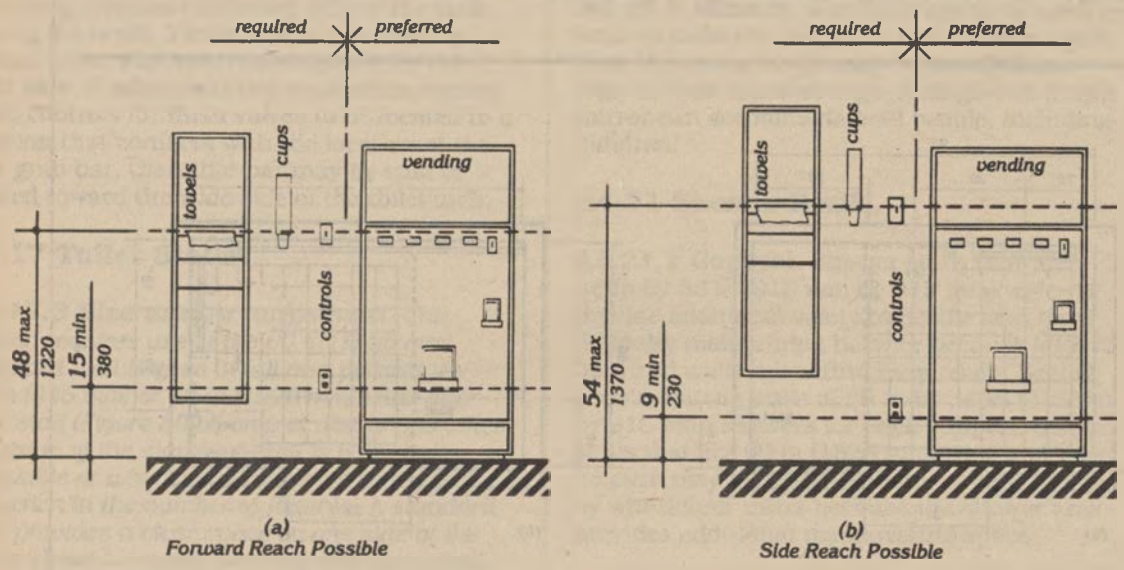

Fig. A8
Control Reach Limitations

mandatory and advisory control mounting height provisions for typical equipment.

Electrical receptacles installed to serve individual appliances and not intended for regular or frequent use by building occupants are not required to be mounted within the specified reach ranges. Examples would be receptacles installed specifically for wall-mounted clocks, refrigerators, and microwave ovens.

A4.28 Alarms.

A4.28.2 Audible Alarms. Audible emergency signals must have an intensity and frequency that can attract the attention of individuals who have partial hearing loss. People over 60 years of age generally have difficulty perceiving frequencies higher than 10,000 Hz. *An alarm signal which has a periodic element to its signal, such as single stroke bells (clang-pause-clang-pause), hi-low (up-down-up-down) and fast whoop (on-off-on-off) are best. Avoid continuous or reverberating tones. Select a signal which has a sound characterized by three or four clear tones without a great deal of "noise" in between.*

A4.28.3 Visual Alarms. The specifications in this section do not preclude the use of zoned or coded alarm systems.

A4.28.4 Auxiliary Alarms. Locating visual emergency alarms in rooms where persons who are deaf may work or reside alone can ensure that they will always be warned when an emergency alarm is activated. To be effective, such devices must be located and oriented so that they will spread signals and reflections throughout a space or raise the overall light level sharply. *However, visual alarms alone are not necessarily the best means to alert sleepers. A study conducted by Underwriters Laboratory (UL) concluded that a flashing light more than seven times brighter was required (110 candela v. 15 candela, at the same distance) to awaken sleepers as was needed to alert awake subjects in a normal daytime illuminated room.*

For hotel and other rooms where people are likely to be asleep, a signal-activated vibrator placed between mattress and box spring or under a pillow was found by UL to be much more effective in alerting sleepers. Many readily available devices are sound-activated so that they could respond to an alarm clock, clock radio, wake-up telephone call or room smoke detector. Activation by a building alarm system can either be accomplished by a separate circuit activating an auditory alarm which would, in turn, trigger the vibrator or by a signal transmitted through the ordinary 110-volt outlet. Transmission of signals through the power line is relatively simple and is the basis of common, inexpensive remote light control systems sold in many department and electronic stores for home use. So-called "wireless" intercoms operate on the same principal.

A4.29 *Detectable* Warnings.

A4.29.2 *Detectable* Warnings on Walking Surfaces. *The material used to provide contrast should contrast by at least 70%. Contrast in percent is determined by:*

$$Contrast = [(B_1 - B_2)/B_1] \times 100$$

where B_1 = light reflectance value (LRV) of the lighter area
and B_2 = light reflectance value (LRV) of the darker area.

Note that in any application both white and black are never absolute; thus, B_1 never equals 100 and B_2 is always greater than 0.

A4.30 Signage.

A4.30.1 General. In building complexes where finding locations independently on a routine basis may be a necessity (for example, college campuses), tactile maps or prerecorded instructions can be very helpful to visually impaired people. Several maps and auditory instructions have been developed and tested for specific applications. The type of map or instructions used must be based on the information to be communicated, which depends highly on the type of buildings or users.

Landmarks that can easily be distinguished by visually impaired individuals are useful as orientation cues. Such cues include changes in illumination level, bright colors, unique patterns, wall murals, location of special equipment or other architectural features.

Many people with disabilities have limitations in movement of their heads and reduced peripheral vision. Thus, signage positioned

A4.30 Signage

perpendicular to the path of travel is easiest for them to notice. People can generally distinguish signage within an angle of 30 degrees to either side of the centerlines of their faces without moving their heads.

A4.30.2 Character Proportion. The legibility of printed characters is a function of the viewing distance, character height, the ratio of the stroke width to the height of the character, the contrast of color between character and background, and print font. The size of characters must be based upon the intended viewing distance. A severely nearsighted person may have to be much closer to recognize a character of a given size than a person with normal visual acuity.

A4.30.4 Raised *and Brailled* Characters *and Pictorial Symbol Signs (Pictograms).* *The standard dimensions for literary Braille are as follows:*

Dot diameter	*.059 in.*
Inter-dot spacing	*.090 in.*
Horizontal separation between cells	*.241 in.*
Vertical separation between cells	*.395 in.*

Raised borders around *signs containing* raised characters may make them confusing to read unless the border is set far away from the characters. *Accessible signage with descriptive materials about public buildings, monuments, and objects of cultural interest may not provide sufficiently detailed and meaningful information. Interpretive guides, audio tape devices, or other methods may be more effective in presenting such information.*

A4.30.5 Finish and Contrast. *An eggshell finish (11 to 19 degree gloss on 60 degree glossimeter) is recommended. Research indicates that signs are more legible for persons with low vision when characters contrast with their background by at least 70 percent. Contrast in percent shall be determined by:*

$$Contrast = [(B_1 - B_2)/B_1] \times 100$$

where B_1 = light reflectance value (LRV) of the lighter area
and B_2 = light reflectance value (LRV) of the darker area.

Note that in any application both white and black are never absolute; thus, B_1 never equals 100 and B_2 is always greater than 0.

The greatest readability is usually achieved through the use of light-colored characters or symbols on a dark background.

A4.30.7 Symbols of Accessibility for Different Types of Listening Systems. *Paragraph 4 of this section requires signage indicating the availability of an assistive listening system. An appropriate message should be displayed with the international symbol of access for hearing loss since this symbol conveys general accessibility for people with hearing loss. Some suggestions are:*

INFRARED
ASSISTIVE LISTENING SYSTEM
AVAILABLE
——PLEASE ASK——

AUDIO LOOP IN USE
TURN T-SWITCH FOR
BETTER HEARING
——OR ASK FOR HELP——

FM
ASSISTIVE LISTENING
SYSTEM AVAILABLE
——PLEASE ASK——

The symbol may be used to notify persons of the availability of other auxiliary aids and services such as: real time captioning, captioned note taking, sign language interpreters, and oral interpreters.

A4.30.8 Illumination Levels. *Illumination levels on the sign surface shall be in the 100 to 300 lux range (10 to 30 footcandles) and shall be uniform over the sign surface. Signs shall be located such that the illumination level on the surface of the sign is not significantly exceeded by the ambient light or visible bright lighting source behind or in front of the sign.*

A4.31 Telephones.

A4.31.3 Mounting Height. In localities where the dial-tone first system is in operation, calls can be placed at a coin telephone through the operator without inserting coins. The operator button is located at a height of 46 in (1170 mm) if the coin slot of the telephone is at 54 in (1370 mm). A generally available public telephone with a coin slot mounted lower on the equipment would allow universal installation of telephones at a height of 48 in (1220 mm) or less to all operable parts.

A4.31.9 Text Telephones. *A public text telephone may be an integrated text telephone pay phone unit or a conventional portable text telephone that is permanently affixed within, or adjacent to, the telephone enclosure. In order to be usable with a pay phone, a text telephone which is not a single integrated text telephone pay phone unit will require a shelf large enough (10 in (255mm) wide by 10 in (255 mm) deep with a 6 in (150 mm) vertical clearance minimum) to accommodate the device, an electrical outlet, and a power cord. Movable or portable text telephones may be used to provide equivalent facilitation. A text telephone should be readily available so that a person using it may access the text telephone easily and conventently. As currently designed pocket-type text telephones for personal use do not accommodate a wide range of users. Such devices would not be considered substantially equivalent to conventional text telephones. However, in the future as technology develops this could change.*

A4.32 *Fixed or Built-in* Seating and Tables.

A4.32.4 Height of *Tables or Counters.* Different types of work require different *table or counter* heights for comfort and optimal performance. Light detailed work such as writing requires a *table or counter* close to elbow height for a standing person. Heavy manual work such as rolling dough requires *a counter or table* height about 10 in (255 mm) below elbow height for a standing person. This principle of *high/low table or counter heights* also applies for seated persons; however, the limiting condition for seated manual work is clearance under the *table or counter.*

Table A1 shows convenient *counter heights* for seated persons. The great variety of heights for comfort and optimal performance indicates a need for alternatives or a compromise in height if people who stand and people who sit will be using the same counter area.

Table A1
Convenient Heights of Tables and Counters for Seated People[1]

Conditions of Use	Short Women in mm		Tall Men in mm	
Seated in a wheelchair:				
Manual work–				
Desk or removeable armrests	26	660	30	760
Fixed, full-size armrests[2]	32[3]	815	32[3]	815
Light detailed work:				
Desk or removable armrests	29	735	34	865
Fixed, full-size armrests[2]	32[3]	815	34	865
Seated in a 16-in. (405-mm)				
High chair:				
Manual work	26	660	27	685
Light detailed work	28	710	31	785

[1] All dimensions are based on a work-surface thickness of 1 1/2 in (38 mm) and a clearance of 1 1/2 in (38 mm) between legs and the underside of a work surface.

[2] This type of wheelchair arm does not interfere with the positioning of a wheelchair under a work surface.

[3] This dimension is limited by the height of the armrests: a lower height would be preferable. Some people in this group prefer lower work surfaces, which require positioning the wheelchair back from the edge of the counter.

A4.33 Assembly Areas.

A4.33.2 Size of Wheelchair Locations. Spaces large enough for two wheelchairs allow people who are coming to a performance together to sit together.

A4.33.3 Placement of Wheelchair Locations. The location of wheelchair areas can be planned so that a variety of positions

Table A2. Summary of Assistive Listening Devices

within the seating area are provided. This will allow choice in viewing and price categories.

Building/life safety codes set minimum distances between rows of fixed seats with consideration of the number of seats in a row, the exit aisle width and arrangement, and the location of exit doors. "Continental" seating, with a greater number of seats per row and a commensurate increase in row spacing and exit doors, facilitates emergency egress for all people and increases ease of access to mid-row seats especially for people who walk with difficulty. Consideration of this positive attribute of "continental" seating should be included along with all other factors in the design of fixed seating areas.

Table A2. Summary of Assistive Listening Devices

System	Advantages	Disadvantages	Typical Applications
Induction Loop Transmitter: Transducer wired to induction loop around listening area. Receiver: Self-contained induction receiver or personal hearing aid with telecoil.	Cost-Effective Low Maintenance Easy to use Unobtrusive May be possible to integrate into existing public address system. Some hearing aids can function as receivers.	Signal spills over to adjacent rooms. Susceptible to electrical interference. Limited portability Inconsistent signal strength. Head position affects signal strength. Lack of standards for induction coil performance.	Meeting areas Theaters Churches and Temples Conference rooms Classrooms TV viewing
FM Transmitter: Flashlight-sized worn by speaker. Receiver: With personal hearing aid via DAI or induction neck-loop and telecoil; or self-contained with earphone(s).	Highly portable Different channels allow use by different groups within the same room. High user mobility Variable for large range of hearing losses.	High cost of receivers Equipment fragile Equipment obtrusive High maintenance Expensive to maintain Custom fitting to individual user may be required.	Classrooms Tour groups Meeting areas Outdoor events One-on-one
Infrared Transmitter: Emitter in line-of-sight with receiver. Receiver: Self-contained. Or with personal hearing aid via DAI or induction neckloop and telecoil.	Easy to use Insures privacy or confidentiality Moderate cost Can often be integrated into existing public address system.	Line-of-sight required between emitter and receiver. Ineffective outdoors Limited portability Requires installation	Theaters Churches and Temples Auditoriums Meetings requiring confidentiality TV viewing

Source: Rehab Brief, National Institute on Disability and Rehabilitation Research, Washington, DC, Vol. XII, No. 10, (1990).

A4.33.6 Placement of Listening Systems. A distance of 50 ft (15 m) allows a person to distinguish performers' facial expressions.

A4.33.7 Types of Listening Systems. *An assistive listening system appropriate for an assembly area for a group of persons or where the specific individuals are not known in advance, such as a playhouse, lecture hall or movie theater, may be different from the system appropriate for a particular individual provided as an auxiliary aid or as part of a reasonable accommodation. The appropriate device for an individual is the type that individual can use, whereas the appropriate system for an assembly area will necessarily be geared toward the "average" or aggregate needs of various individuals.* A listening system that can be used from any seat in a seating area is the most flexible way to meet this specification. Earphone jacks with variable volume controls can benefit only people who have slight hearing loss and do not help people who use hearing aids. At the present time, *magnetic induction* loops are the most feasible type of listening system for people who use hearing aids *equipped with "T-coils,"* but people without hearing aids or those with hearing aids not equipped with inductive pick-ups cannot use them *without special receivers.* Radio frequency systems can be extremely effective and inexpensive. People without hearing aids can use them, but people with hearing aids need a special receiver to use them as they are presently designed. If hearing aids had a jack to allow a by-pass of microphones, then radio frequency systems would be suitable for people with and without hearing aids. Some listening systems may be subject to interference from other equipment and feedback from hearing aids of people who are using the systems. Such interference can be controlled by careful engineering design that anticipates feedback sources in the surrounding area.

Table A2, reprinted from a National Institute of Disability and Rehabilitation Research "Rehab Brief," shows some of the advantages and disadvantages of different types of assistive listening systems. In addition, the Architectural and Transportation Barriers Compliance Board (Access Board) has published a pamphlet on Assistive Listening Systems which lists demonstration centers across the country where technical assistance can be obtained in selecting and installing appropriate systems. The state of New York has also adopted a detailed technical specification which may be useful.

A5.0 Restaurants and Cafeterias.

A5.1 General. *Dining counters (where there is no service) are typically found in small carry-out restaurants, bakeries, or coffee shops and may only be a narrow eating surface attached to a wall. This section requires that where such a dining counter is provided, a portion of the counter shall be at the required accessible height.*

A7.0 Business and Mercantile.

A7.2(3) Assistive Listening Devices. *At all sales and service counters, teller windows, box offices, and information kiosks where a physical barrier separates service personnel and customers, it is recommended that at least one permanently installed assistive listening device complying with 4.33 be provided at each location or series. Where assistive listening devices are installed, signage should be provided identifying those stations which are so equipped.*

A7.3 Check-out Aisles. *Section 7.2 refers to counters without aisles; section 7.3 concerns check-out aisles. A counter without an aisle (7.2) can be approached from more than one direction such as in a convenience store. In order to use a check-out aisle (7.3), customers must enter a defined area (an aisle) at a particular point, pay for goods, and exit at a particular point.*

A10.3 Fixed Facilities and Stations.

A10.3.1(7) Route Signs. *One means of making control buttons on fare vending machines usable by persons with vision impairments is to raise them above the surrounding surface. Those activated by a mechanical motion are likely to be more detectable. If farecard vending, collection, and adjustment devices are designed to accommodate farecards having one tactually distinctive corner, then a person who has a vision impairment will insert the card with greater ease. Token collection devices that are designed to accommodate tokens which are perforated can allow a person to distinguish more readily between tokens and common coins. Thoughtful placement of accessible gates and fare vending machines in relation to inaccessible devices will make their use and detection easier for all persons with disabilities.*

BILLING CODE 4910-62-C

Appendix B to Part 37—UMTA Regional Offices

Region I, Urban Mass Transportation Administration, 206 Federal Plaza, Suite 2940, New York, NY 10278
Region II, Urban Mass Transportation Administration, Transportation Systems Center, Kendall Square, 55 Broadway, Suite 921, Cambridge, MA 02142
Region III, Urban Mass Transportation Administration, 841 Chestnut Street, Suite 714, Philadelphia, PA 19107
Region IV, Urban Mass Transportation Administration, 1720 Peachtree Road NW., Suite 400, Atlanta, GA 30309
Region V, Urban Mass Transportation Administration, 55 East Monroe Street, Room 1415, Chicago, IL 60603
Region VI, Urban Mass Transportation Administration, 819 Taylor Street, Suite 9A32, Ft. Worth, TX 76102
Region VII, Urban Mass Transportation Administration, 6301 Rockville Road, Suite 303, Kansas City, MS 64131
Region VIII, Urban Mass Transportation Administration, Federal Office Building, 1961 Stout Street, 5th Floor, Denver, CO 80294
Region IX, Urban Mass Transportation Administration, 211 Main Street, Room 1160, San Francisco, CA 94105
Region X, Urban Mass Transportation Administration, 3142 Federal Building, 915 Second Avenue, Seattle, WA 98174

Appendix C to Part 37—Certifications

Certification of Equivalent Service

The (name of agency) certifies that its demand responsive service offered to individuals with disabilities, including individuals who use wheelchairs, is equivalent to the level and quality of service offered to individuals without disabilities. Such service, when viewed in its entirety, is provided in the most integrated setting feasible and is equivalent with respect to:

(1) Response time;
(2) Fares;
(3) Geographic service area;
(4) Hours and days of service;
(5) Restrictions on trip purpose;
(6) Availability of information and reservation capability; and
(7) Constraints on capacity or service availability.

In accordance with 49 CFR 37.77, public entities operating demand responsive systems for the general public which receive financial assistance under section 18 of the Urban Mass Transportation Act must file this certification with the appropriate state program office before procuring any inaccessible vehicle. Such public entities not receiving UMTA funds shall also file the certification with the appropriate state program office. Such public entities receiving UMTA funds under any other section of the UMT Act must file the certification with the appropriate UMTA regional office. This certification is valid for no longer than one year from its date of filing.

(name of authorized official)

(title)

(signature)

MPO Certification of Paratransit Plan

The (name of Metropolitan Planning Organization) hereby certifies that it has reviewed the ADA paratransit plan prepared by (name of submitting entity (ies)) as required under 49 CFR part 37. 139(h) and finds it to be in conformance with the transportation plan developed under 49 CFR part 613 and 23 CFR part 450 (the UMTA/FHWA joint planning regulation). This certification is valid for one year.

signature

name of authorized official

title

date

Existing Paratransit Service Survey

This is to certify that (name of public entity (ies)) has conducted a survey of existing paratransit services as required by 49 CFR 37.137 (a).

signature

name of authorized official

title

date

Included Service Certification

This is to certify that service provided by other entities but included in the ADA paratransit plan submitted by (name of submitting entity (ies)) meets the requirements of 49 CFR part 37, subpart F providing that ADA eligible individuals have access to the service; the service is provided in the manner represented; and, that efforts will be made to coordinate the provision of paratransit service offered by other providers.

signature

name of authorized official

title

date

Joint Plan Certification I

This is to certify that (name of entity covered by joint plan) is committed to providing ADA paratransit service as part of this coordinated plan and in conformance with the requirements of 49 CFR part 37, subpart F.

signature

name of authorized official

title

date

Joint Plan Certification II

This is to certify that (name of entity covered by joint plan) will, in accordance with 49 CFR 37.141, maintain current levels of paratransit service until the coordinated plan goes into effect.

signature

name of authorized official

title

date

State Certification that Plans have been Received

This is to certify that all ADA paratransit plans required under 49 CFR 37.139 have been received by (state DOT)

signature

name of authorized official

title

date

Appendix D to Part 37—Construction and Interpretation of Provisions of 49 CFR part 37

This appendix explains the Department's construction and interpretation of provisions of 49 CFR part 37. It is intended to be used as definitive guidance concerning the meaning and implementation of these provisions. The Appendix is organized on a section-by-section basis. Some sections of the rule are not discussed in the Appendix, because they are self-explanatory or we do not currently have interpretive material to provide concerning them.

The Department also provides guidance by other means, such as manuals and letters. The Department intends to update this Appendix periodically to include guidance, provided in response to inquiries about specific situations, that is of general relevance or interest.

Amendments to 49 CFR Part 27

Section 27.67(d) has been revised to reference the Access Board facility guidelines (found in appendix A to part 37) as well as the Uniform Federal Accessibility Standard (UFAS). This change was made to ensure consistency between requirements under section 504 and the ADA. Several caveats relating to the application of UFAS (e.g., that spaces not used by the public or likely to result in the employment of individuals with disabilities would not have to meet the standards) have been deleted. It is the Department's understanding that provisions of the Access Board standards and part 37 make them unnecessary.

The Department is aware that there is a transition period between the publication of this rule and the effective date of many of its provisions (e.g., concerning facilities and paratransit services) during which section 504 remains the basic authority for accessibility

modifications. In this interval, the Department expects recipients' compliance with section 504 to look forward to compliance with the ADA provisions. That is, if a recipient is making a decision about the shape of its paratransit service between the publication of this rule and January 26, 1992, the decision should be in the direction of service that will help to comply with post-January 1992 requirements. A recipient that severely curtailed its present paratransit service in October, and then asked for a three- or five-year phase-in of service under its paratransit plan, would not be acting consistent with this policy.

Likewise, the Department would view with disfavor any attempt by a recipient to accelerate the beginning of the construction, installation or alteration of a facility to before January 26, 1992, to "beat the clock" and avoid the application of this rule's facility standards. The Department would be very reluctant to approve grants, contracts, exemption requests etc., that appear to have this effect. The purpose of the Department's administration of section 504 is to ensure compliance with the national policy stated in the ADA, not to permit avoidance of it.

Subpart A—General

Section 37.3 Definitions

The definition of "commuter authority" includes a list of commuter rail operators drawn from a statutory reference in the ADA. It should be noted that this list is not exhaustive. Other commuter rail operators (e.g., in Chicago or San Francisco) would also be encompassed by this definition.

The definition of "commuter bus service" is important because the ADA does not require complementary paratransit to be provided with respect to commuter bus service operated by public entities. The rationale that may be inferred for the statutory exemption for this kind of service concerns its typical characteristics (e.g., no attempt to comprehensively cover a service area, limited route structure, limited origins and destinations, interface with another mode of transportation, limited purposes of travel). These characteristics can be found in some transportation systems other than bus systems oriented toward work trips. For example, bus service that is used as a dedicated connecter to commuter or intercity rail service, certain airport shuttles, and university bus systems share many or all of these characteristics. As explained further in the discussion of subpart B, the Department has determined that it is appropriate to cover these services with the requirements applicable to commuter bus systems.

The definitions of "designated public transportation" and "specified public transportation" exclude transportation by aircraft. Persons interested in matters concerning access to air travel for individuals with disabilities should refer to 14 CFR part 382, the Department's regulation implementing the Air Carrier Access Act. Since the facility requirements of this part refer to facilities involved in the provision of designated or specified public transportation, airport facilities are not covered by this part. DOJ makes clear that public and private airport facilities are covered under its title II and title III regulations, respectively.

The examples given in the definition of "facility" all relate to ground transportation. We would point out that, since transportation by passenger vessels is covered by this rule and by DOJ rules, such vessel-related facilities as docks, wharfs, vessel terminals etc. fall under this definition. It is intended that specific requirements for vessels and related facilities will be set forth in future rulemaking.

The definitions of "fixed route system" and "demand responsive system" derive directly from the ADA's definitions of these terms. Some systems, like a typical city bus system or a dial-a-ride van system, fit clearly into one category or the other. Other systems may not so clearly fall into one of the categories. Nevertheless, because how a system is categorized has consequences for the requirements it must meet, entities must determine, on a case-by-case basis, into which category their systems fall.

In making this determination, one of the key factors to be considered is whether the individual, in order to use the service, must request the service, typically by making a call.

With fixed route service, no action by the individual is needed to initiate public transportation. If an individual is at a bus stop at the time the bus is scheduled to appear, then that individual will be able to access the transportation system. With demand-reponsive service, an additional step must be taken by the individual before he or she can ride the bus, i.e., the individual must make a telephone call.
(S. Rept. 101–116 at 54).

Other factors, such as the presence or absence of published schedules, or the variation of vehicle intervals in anticipation of differences in usage, are less important in making the distinction between the two types of service. If a service is provided along a given route, and a vehicle will arrive at certain times regardless of whether a passenger actively requests the vehicle, the service in most cases should be regarded as fixed route rather than demand responsive.

At the same time, the fact that there is an interaction between a passenger and transportation service does not necessarily make the service demand responsive. For many types of service (e.g., intercity bus, intercity rail) which are clearly fixed route, a passenger has to interact with an agent to buy a ticket. Some services (e.g., certain commuter bus or commuter rail operations) may use flag stops, in which a vehicle along the route does not stop unless a passenger flags the vehicle down. A traveler staying at a hotel usually makes a room reservation before hopping on the hotel shuttle. This kind of interaction does not make an otherwise fixed route service demand responsive.

On the other hand, we would regard a system that permits user-initiated deviations from routes or schedules as demand-responsive. For example, if a rural public transit system (e.g., a section 18 recipient) has a few fixed routes, the fixed route portion of its system would be subject to the requirements of subpart F for complementary paratransit service. If the entity changed its system so that it operated as a route-deviation system, we would regard it as a demand responsive system. Such a system would not be subject to complementary paratransit requirements.

The definition of "individual with a disability" excludes someone who is currently engaging in the illegal use of drugs, when a covered entity is acting on the basis of such use. This concept is more important in employment and public accommodations contexts than it is in transportation, and is discussed at greater length in the DOJ and EEOC rules. Essentially, the definition says that, although drug addiction (i.e., the status or a diagnosis of being a drug abuser) is a disability, no one is regarded as being an individual with a disability on the basis of current illegal drug use.

Moreover, even if an individual has a disability, a covered entity can take action against the individual if that individual is currently engaging in illegal drug use. For example, if a person with a mobility or vision impairment is ADA paratransit eligible, but is caught possessing or using cocaine or marijuana on a paratransit vehicle, the transit provider can deny the individual further eligibility. If the individual has successfully undergone rehabilitation or is no longer using drugs, as explained in the preamble to the DOJ rules, the transit provider could not continue to deny eligibility on the basis that the individual was a former drug user or still was diagnosed as a person with a substance abuse problem.

We defined "paratransit" in order to note its specialized usage in the rule. Part 37 uses this term to refer to the complementary paratransit service comparable to public fixed route systems which must be provided. Typically, paratransit is provided in a demand responsive mode. Obviously, the rule refers to a wide variety of demand responsive services that are not "paratransit," in this specialized sense.

The ADA's definition of "over-the-road bus" may also be somewhat narrower than the common understanding of the term. The ADA definition focuses on a bus with an elevated passenger deck over a baggage compartment (i.e., a "Greyhound-type" bus). Other types of buses commonly referred to as "over-the-road buses," which are sometimes used for commuter bus or other service, do not come within this definition. Only buses that do come within the definition are subject to the over-the-road bus exception to accessibility requirements in Title III of the ADA.

For terminological clarity, we want to point out that two different words are used in ADA regulations to refer to devices on which individuals with hearing impairments communicate over telephone lines. DOJ uses the more traditional term "telecommunications device for the deaf" (TDD). The Access Board uses a newer term, "text telephone." The DOT rule uses the terms interchangably.

The definition of "transit facility" applies only with reference to the TDD requirement of Appendix A to this Part. The point of the definition is to exempt from TDD requirements open structures, like bus shelters, or facilities which are not used primarily as transportation stops or

terminals. For example, a drug store in a small town may sell intercity bus tickets, and people waiting for the bus may even wait for the bus inside the store. But the drug store's raison d'etre is not to be a bus station. Its transportation function is only incidental. Consequently, its obligations with respect to TDDs would be those required of a place of public accommodation by DOJ rules.

A "used vehicle" means a vehicle which has prior use; prior, that is, to its acquisition by its present owner or lessee. The definition is not relevant to existing vehicles in one's own fleet, which were obtained before the ADA vehicle accessibility requirements took effect.

A "vanpool" is a voluntary commuter ridesharing arrangement using a van with a seating capacity of more than seven persons, including the driver. Carpools are not included in the definition. There are some systems using larger vehicles (e.g., buses) that operate, in effect, as vanpools. This definition encompasses such systems. Vanpools are used for daily work trips, between commuters' homes (or collection points near them) and work sites (or drop points near them). Drivers are themselves commuters who are either volunteers who receive no compensation for their efforts or persons who are reimbursed by other riders for the vehicle, operating, and driving costs.

The definition of "wheelchair" includes a wide variety of mobility devices. This inclusiveness is consistent with the legislative history of the ADA (See S. Rept. 101–116 at 48). While some mobility devices may not look like many persons' traditional idea of a wheel chair, three and four wheeled devices, of many varied designs, are used by individuals with disabilities and must be transported. The definition of "common wheelchair," developed by the Access Board, is intended to help transit providers determine which wheelchairs they have to carry. The definition involves an "envelope" relating to the Access Board requirements for vehicle lifts.

A lift conforming to Access Board requirements is 30" x 48" and capable of lifting a wheelchair/occupant combination of up to 600 pounds. Consequently, a common wheelchair is one that fits these size and weight dimensions. Devices used by individuals with disabilities that do not fit this envelope (e.g., may "gurneys") do not have to be carried.

Section 37.5 Nondiscrimination

This section states the general nondiscrimination obligation for entities providing transportation service. It should be noted that virtually all public and private entities covered by this regulation are also covered by DOJ regulations, which have more detailed statements of general nondiscrimination obligations.

Under the ADA, an entity may not consign an individual with disabilities to a separate, "segregated," service for such persons, if the individual can in fact use the service for the general public. This is true even if the individual takes longer, or has more difficulty, than other persons in using the service for the general public.

One instance in which this principal applies concerns the use of designated priority seats (e.g., the so-called "elderly and handicapped" seats near the entrances to buses). A person with a disability (e.g., a visual impairment) may choose to take advantage of this accommodation or not. If not, it is contrary to rule for the entity to insist that the individual must sit in the priority seats.

The prohibition on special charges applies to charges for service to individuals with disabilities that are higher than charges for the same or comparable services to other persons. For examples, if a shuttle service charges $20.00 for a ride from a given location to the airport for most people, it could not charge $40.00 because the passenger had a disability or needed to use the shuttle service's lift-equipped van. Higher mileage charges for using an accessible vehicle would likewise be inconsistent with the rule. So would charging extra to carry a service animal accompanying an individual with a disability.

If a taxi company charges $1.00 to stow luggage in the trunk, it cannot charge $2.00 to stow a folding wheelchair there. This provision does not mean, however, that a transportation provider cannot charge nondiscriminatory fees to passengers with disabilities. The taxi company in the above example can charge a passenger $1.00 to stow a wheelchair in the trunk; it is not required to waive the charge. This section does not prohibit the fares for paratransit service which transit providers are allowed to charge under § 37.131(d).

A requirement for an attendant is inconsistent with the general nondiscrimination principle that prohibits policies that unnecessarily impose requirements on individuals with disabilities that are not imposed on others. Consequently, such requirements are prohibited. An entity is not required to provide attendant services (e.g., assistance in toileting, feeding, dressing) etc.

This provision must also be considered in light of the fact that an entity may refuse service to someone who engages in violent, seriously disruptive, or illegal conduct. If an entity may legitimately refuse service to someone, it may condition service to him on actions that would mitigate the problem. The entity could require an attendant as a condition of providing service it otherwise had the right to refuse.

The rule also points out that involuntary conduct related to a disability that may offend or annoy other persons, but which does not pose a direct treat, is not a basis for refusal of transportation. For example, some persons with Tourette's syndrome may make involuntary profane exclamations. These may be very annoying or offensive to others, but would not be a ground for denial of service. Nor would it be consistent with the nondiscrimination requirements of this part to deny service based on fear or misinformation about the disability. For example, a transit provider could not deny service to a person with HIV disease because its personnel or other passengers are afraid of being near people with that condition.

This section also prohibits denials of service or the placing on services of conditions inconsistent with this part on individuals with disabilities because of insurance company policies or requirements. If an insurance company told a transit provider that it would withdraw coverage, or raise rates, unless a transit provider refused to carry persons with disabilities, or unless the provider refused to carry three-wheeled scooters, this would not excuse the provider from providing the service as mandate by this part. This is not a regulatory requirement on insurance companies, but simply says that covered entities must comply with this part, even in the face of difficulties with their insurance companies.

Section 37.7 Standards for Accessible Vehicles

This section makes clear that, in order to meet accessibility requirements of this rule, vehicles must comply with Access Board standards, incorporated in DOT rules as 49 CFR part 38. Paragraph (b) of § 37.7 spells out a procedure by which an entity (public or private) can deviate from provisions of part 38 with respect to vehicles. The entity can make a case to the Administrator that it is unable to comply with a particular portion of part 38, as written, for specified reasons, and that it is providing comparable compliance by some alternative method. The entity would have to describe how its alternative mode of compliance would meet or exceed the level of access to or usability of the vehicle that compliance with part 38 would otherwise provide.

It should be noted that equivalent facilitation does not provide a means to get a waiver of accessibility requirements. Rather, it is a way in which comparable (not a lesser degree of) accessibility can be provided by other means. The entity must consult with the public through some means of public participation in devising its alternative form of compliance, and the public input must be reflected in the submission to the Administrator (or the Federal Railroad Administrator in appropriate cases, such as a request concerning Amtrak). The Administrator will make a case-by-case decision about whether compliance with part 38 was achievable and, if not, weather the proffered alternative complies with the equivalent facilitation standard. DOT intends to consult with the Access Board in making these determinations.

This equivalent facilitation provision can apply to buses or other motor vehicles as well as to rail cars and vehicles. An example of what could be an equivalent facilitation would concern rail cars which would leave too wide a horizontal gap between the door and the platform. If the operator used a combination of bridgeplates and personnel to bridge the gap, it might be regarded as an equivalent facilitation in appropriate circumstances.

Section 37.7(c) clarifies which specifications must be complied with for over-the-road buses purchased by public entities (under subpart D of part 37) or private entities standing in the shoes of the public entity (as described in § 37.23 of part 37). This section is necessary to make clear that over-the-road coaches must be accessible, when they are purchased by or in

furtherance of a contract with a public entity. While the October 4, 1990 rule specified that over-the-road coaches must be accessible under these circumstances, we had not previously specified what constitutes accessibility.

Accordingly, this paragraph specifies that an over-the-road bus must have a lift which meets the performance requirements of a regular bus lift (see § 38.23) and must meet the interim accessibility features specified for all over-the-road buses in part 3, subpart G.

Section 37.9 Standards for Transportation Facilities

This section makes clear that, in order to meet accessibility requirements of this rule, vehicles must comply with appendix A to part 37, which incorporates the Access Board facility guidelines.

Paragraph (b) of § 37.9 provides that, under certain circumstances, existing accessibility modifications to key station facilities do not need to be modified further in order to conform to appendix A. This is true even if the standards under which the facility was modified differ from the Access Board guidelines or provide a lesser standard of accessibility.

To qualify for this "grandfathering," alterations must have been before January 26, 1992. As in other facility sections of the rule, an alteration is deemed to begin with the issuance of a notice to proceed or work order. The existing modifications must conform to ANSI A–117.1, Specifications for Making Buildings and Facilities Accessible to and Usable by the Physically Handicapped 1980, or the Uniform Federal Accessibility Standard. (UFAS).

For example, if an entity used a Federal grant or loan or money to make changes to a building, it would already have had to comply with the Uniform Federal Accessibility Standards. Likewise, if a private entity, acting without any federal money in the project, may have complied with the ANSI A117.1 standard. So long as the work was done in conformity with the standard that was in effect when the work was done, the alteration will be considered accessible.

However, because one modification was made to a facility under one of these standards, the entity still has a responsibility to make other modifications needed to comply with applicable accessibility requirements. For example, if an entity has made some modifications to a key station according to one of these older standards, but the modifications do not make the key station entirely accessible as this rule requires, then additional modifications would have to be made according to the standards of appendix A. Suppose this entity has put an elevator into the station to make it accessible to individuals who use wheelchairs. If the elevator does not fully meet appendix A standards, but met the applicable ANSI standard when it was installed, it would not need further modifications now. But if it had not already done so, the entity would have to install a tactile strip along the platform edge in order to make the key station fully accessible as provided in this rule. The tactile strip would have to meet appendix A requirements.

The rule specifically provides that "grandfathering" applies only to alterations of individual elements and spaces and only to the extent that provisions covering those elements or spaces are found in UFAS or AHSI A117.1. For example, alterations to the telephones in a key station may have been carried out in order to lower them to meet the requirements of UFAS, but telecommunications devices for the deaf (TDDs) were not installed. (Neither UFAS nor the ANSI standard include requirements concerning TDDs). However, because appendix A does contain TDD requirements, the key station must now be altered in accordance with the standards for TDDs. Similarly, earlier alteration of an entire station in accordance with UFAS or the ANSI standard would not relieve an entity from compliance with any applicable provision concerning the gap between the platform between the platform and the vehicle in a key station, because neither of these two standards addresses the interface between vehicle and platform.

New paragraph (c) of this section clarifies a provision of the Access Board's standards concerning the construction of bus stop pads at bus stops. The final Access Board standard (found at section 10.2.1(1) of appendix A to part 37) has been rewritten slightly to clear up confusion about the perceived necessary construction of a bus stop pad. Section 10.2.1(1) does not require that anyone build a bus stop pad; it does specify what a bus stop pad must look like, if it is constructed. The further clarifying language in § 37.9(c) explains that public entities must exert control over the construction of bus stop pads if they have the ability to do so. The Access Board, as well as DOT, recognize that most physical improvements related to bus stops are out of the control of the transit provider. Paragraph (c) of § 37.9 merely notes that where a transit provider does have control over the construction, it must exercise that control to ensure that the pad meets these specifications.

One further clarification concerning the implication of this provision deals with a bus loading island at which buses pull up on both sides of the island. It would be possible to read the bus pad specification to require the island to be a minimum of 84 inches wide (two widths of a bus stop pad), so that a lift could be deployed from buses on both sides of the island at the same time. A double-wide bus pad, however, is likely to exceed available space in most instances.

Where there is space, of course, building a double-wide pad is one acceptable option under this rule. However, the combination of a pad of normal width and standard operational practices may also suffice. (Such practices could be offered as an equivalent facilitation.) For example, buses on either side of the island could stop at staggered locations (i.e., the bus on the left side could stop several feet ahead of the bus on the right side), so that even when buses were on both sides of the island at once, their lifts could be deployed without conflict. Where it is possible, building the pad a little longer than normal size could facilitate such an approach. In a situation where staggered stop areas are not feasible, an operational practice of having one bus wait until the other's lift cycle had been completed could do the job. Finally, the specification does not require that a pad be built at all. If there is nothing that can be done to permit lift deployment on both sides of an island, the buses can stop on the street, or some other location, so long as the lift is deployable.

Like § 37.7, this section contains a provision allowing an entity to request approval for providing accessibility through an equivalent facilitation.

Section 37.11 Administrative Enforcement

This section spells out administrative means of enforcing the requirements of the ADA. Recipients of Federal financial assistance from DOT (whether public or private entities) are subject to DOT's section 504 enforcement procedures. The existing procedures, including administrative complaints to the DOT Office of Civil Rights, investigation, attempts at conciliation, and final resort to proceedings to cut off funds to a noncomplying recipient, will continue to be used.

In considering enforcement matters, the Department is guided by a policy that emphasizes compliance. The aim of enforcement action, as we see it, is to make sure that entities meet their obligations, not to impose sanctions for their own sake. The Department's enforcement priority is on failures to comply with basic requirements and "pattern or practice" kinds of problems, rather than on isolated operational errors.

Under the DOJ rules implementing Title II of the ADA (28 CFR part 35), DOT is a "designated agency" for enforcement of complaints relating to transportation programs of public entities, even if they do not receive Federal financial assistance. When it receives such a complaint, the Department will investigate the complaint, attempt conciliation and, if conciliation is not possible, take action under section 504 and/or refer the matter to the DOJ for possible further action.

Title III of the ADA does not give DOT any administrative enforcement authority with respect to private entities whose transportation services are subject to part 37. In its Title III rule (28 CFR part 36), DOJ assumes enforcement responsibility for all Title III matters. If the Department of Transportation receives complaints of violations of part 37 by private entities, it will refer the matters to the DOJ.

It should be pointed out that the ADA includes other enforcement options. Individuals have a private right of action against entities who violate the ADA and its implementing regulations. The DOJ can take violators to court. These approaches are not mutually exclusive with the administrative enforcement mechanisms described in this section. An aggrieved individual can complain to DOT about an alleged transportation violation and go to court at the same time. Use of administrative enforcement procedures is not, under titles II and III, an administrative remedy that individuals must exhaust before taking legal action.

We also would point out that the ADA does not assert any blanket preemptive authority over state or local nondiscrimination laws and enforcement mechanisms. While requirements of the ADA and this regulation would preempt conflicting state or local provisions (e.g., a building code or zoning ordinance that prevents compliance with appendix A or other facility accessibility requirements, a provision of local law that said bus drivers could not leave their seats to help secure wheelchair users), the ADA and this rule do not prohibit states and localities from legislating in areas relating to disability. For example, if a state law requires a higher degree of service than the ADA, that requirement could still be enforced. Also, states and localities may continue to enforce their own parallel requirements. For example, it would be a violation of this rule for a taxi driver to refuse to pick up a person based on that person's disability. Such a refusal may also be a violation of a county's taxi rules, subjecting the violator to a fine or suspension of operating privileges. Both ADA and local remedies could proceed in such a case.

Labor-management agreements cannot stand in conflict with the requirements of the ADA and this rule. For example, if a labor-management agreement provides that vehicle drivers are not required to provide assistance to persons with disabilities in a situation in which this rule requires such assistance, then the assistance must be provided notwithstanding the agreement. Labor and management do not have the authority to agree to violate requirements of Federal law.

Section 37.13 Effective Date for Certain Vehicle Lift Specifications.

This section contains an explicit statement of the effective date for vehicle lift platform specifications. The Department has decided to apply the new 30" by 48" lift platform specifications to solicitations after January 25, 1992. As in the October 4, 1990, rule implementing the acquisition requirements; the date of a solicitation is deemed to be the closing date for the submission of bids or offers in a procurement.

Subpart B—Applicability

Section 37.21 Applicability.—General

This section emphasizes the broad applicability of part 37. Unlike section 504, the ADA and its implementing rules apply to entities whether or not they receive Federal financial assistance. They apply to private and public entities alike. For entities which do receive Federal funds, compliance with the ADA and part 37 is a condition of compliance with section 504 and 49 CFR part 27, DOT's section 504 rule.

Virtually all entities covered by this rule also are covered by DOJ rules, either under 28 CFR part 36 as state and local program providers or under 28 CFR part 35 as operators of places of public accommodation. Both sets of rules apply; one does not override the other. The DOT rules apply only to the entity's transportation facilities, vehicles, or services; the DOJ rules may cover the entity's activities more broadly. For example, if a public entity operates a transit system and a zoo, DOT's coverage would stop at the transit system's edge, while DOJ's rule would cover the zoo as well.

DOT and DOJ have coordinated their rules, and the rules have been drafted to be consistent with one another. Should, in the context of some future situation, there be an apparent inconsistency between the two rules, the DOT rule would control within the sphere of transportation services, facilities and vehicles.

Section 37.23 Service Under Contract

This section requires private entities to "stand in the shoes" of public entities with whom they contract to provide transportation services. It ensures that, while a public entity may contract out its service, it may not contract away its ADA responsibilities. The requirement applies primarily to vehicle acquisition requirements and to service provision requirements.

If a public entity wishes to acquire vehicles for use on a commuter route, for example, it must acquire accessible vehicles. It may acquire accessible over-the-road buses, it may acquire accessible full-size transit buses, it may acquire accessible smaller buses, or it may acquire accessible vans. It does not matter what kind of vehicles it acquires, so long as they are accessible. On the other hand, if the public entity wants to use inaccessible buses in its existing fleet for the commuter service, it may do so. All replacement vehicles acquired in the future must, of course, be accessible.

Under this provision, a private entity which contracts to provide this commuter service stands in the shoes of the public entity and is subject to precisely the same requirements (it is not required to do more than the public entity). If the private entity acquires vehicles used to provide the service, the vehicles must be accessible. If it cannot, or chooses not to, acquire an accessible vehicle of one type, it can acquire an accessible vehicle of another type. Like the public entity, it can provide the service with inaccessible vehicles in its existing fleet.

The import of the provision is that it requires a private entity contracting to provide transportation service to a public entity to follow the rules applicable to the public entity. For the time being, a private entity operating in its own right can purchase a new over-the-road bus inaccessible to individuals who use wheelchairs. When that private entity operates service under contract to the public entity, however, it is just as obligated as the public entity itself to purchase an accessible bus for use in that service, whether or not it is an over-the-road bus.

The "stand in the shoes" requirement applies not only to vehicles acquired by private entities explicitly under terms of an executed contract to provide service to a public entity, but also to vehicles acquired "in contemplation of use" for service under such a contract. This language is included to ensure good faith compliance with accessibility requirements for vehicles acquired before the execution of a contract. Whether a particular acquisition is in contemplation of use on a contract will be determined on a case-by-case basis. However, acquiring a vehicle a short time before a contract is executed and then using it for the contracted service is an indication that the vehicle was acquired in contemplation of use on the contract, as is acquiring a vehicle obstensibly for other service provided by the entity and then regularly rotating it into service under the contract.

The "stand in the shoes" requirement is applicable only to the vehicles and service (public entity service requirements, like § 37.163, apply to a private entity in these situations) provided under contract to a public entity. Public entity requirements clearly do not apply to all phases of a private entity's operations, just because it has a contract with a public entity. For example, a private bus company, if purchasing buses for service under contract to a public entity, must purchase accessible buses. The same company, to the extent permitted by the private entity provisions of this part, may purchase inaccessible vehicles for its tour bus operations.

The Department also notes that the "stands in the shoes" requirement may differ depending on the kind of service involved. The public entity's "shoes" are shaped differently, for example, depending on whether the public entity is providing fixed route or demand responsive service to the general public. In the case of demand responsive service, a public entity is not required to buy an accessible vehicle if its demand responsive system, when viewed in its entirety, provides service to individuals with disabilities equivalent to its service to other persons. A private contractor providing a portion of this paratransit service would not necessarily have to acquire an accessible vehicle if this equivalency test is being met by the system as a whole. Similarly, a public entity can, after going through a "good faith efforts" search, acquire inaccessible buses. A private entity under contract to the public can do the same. "Stand in the shoes" may also mean that, under some circumstances, a private contractor need not acquire accessible vehicles. If a private company contracts with a public school district to provide school bus service, it is covered, for that purpose, by the exemption for public school transportation.

In addition, the requirement that a private entity play by the rules applicable to a public entity can apply in situations involving an "arrangement or other relationship" with a public entity other than the traditional contract for service. For example, a private utility company that operates what is, in essence, a regular fixed route public transportation system for a city, and which receives section 3 or 9 funds from UMTA via an agreement with a state or local government agency, would fall under the provisions of this section. The provider would have to comply with the vehicle acquisition, paratransit, and service requirements that would apply to the public entity through which it receives the UMTA funds, if that public entity operated the system itself. The Department would not, however, construe this section to apply to situations in which the degree of UMTA funding and state and local agency involvement is considerably

less, or in which the system of transportation involved is not a *de facto* surrogate for a traditional public entity fixed route transit system serving a city (e.g., a private non-profit social service agency which receives UMTA section 16(b)(2) funds to purchase a vehicle).

This section also requires that a public entity not diminish the percentage of accessible vehicles in its fleet through contracting. For example, suppose a public entity has 100 buses in its fleet, of which 20 are accessible, meaning that 20 percent of its fleet is accessible. The entity decides to add a fixed route, for which a contractor is engaged. The contractor is supplying ten of its existing inaccessible buses for the fixed route. To maintain the 20 percent accessibility ratio, there would have to be 22 accessible buses out of the 110 buses now in operation in carrying out the public entity's service. The public entity could maintain its 20 percent level of accessibility through any one or more of a number of means, such as having the contractor to provide two accessible buses, retrofitting two if its own existing buses, or accelerating replacement of two of its own inaccessible buses with accessible buses.

This rule applies the "stand in the shoes" principle to transactions wholly among private entities as well. For example, suppose a taxi company (a private entity primarily engaged in the business of transporting people) contracts with a hotel to provide airport shuttle van service. With respect to that service, the taxi company would be subject to the requirements for private entities not primarily in the business of transporting people, since it would be "standing in the shoes" of the hotel for that purpose.

Section 37.25 University Transportation Systems

Private university-operated transportation systems are subject to the requirements of this rule for private entities not primarily engaged in the business of transporting people. With one important exception, public university-operated transportation systems are subject to the requirements of the rule for public entities. The nature of the systems involved—demand-responsive or fixed route—determines the precise requirements involved.

For public university fixed route systems, public entity requirements apply. In the case of fixed route systems, the requirements for commuter bus service would govern. This has the effect of requiring the acquisition of accessible vehicles and compliance with most other provisions of the rule, but does not require the provision of complementary paratransit or submitting a paratransit plan. As a result, private and public universities will have very similar obligations under the rule.

Section 37.27 Transportation for Elementary and Secondary Education Systems

This section restates the statutory exemption from public entity requirements given to public school transportation. This extension also applies to transportation of pre-school children to Head Start or special education programs which receive Federal assistance. It also applies to arrangements permitting pre-school children of school bus drivers to ride a school bus or allowing teenage mothers to be transported to day care facilities at a school or along a school bus route so that their mothers may continue to attend school (See H. Rept. 101–485, pt. 1 at 27). The situation for private schools is more complex. According to the provision, a private elementary or secondary school's transportation system is exempt from coverage under this rule if all three of the following conditions are met: (1) The school receives Federal financial assistance; (2) the school is subject to section 504; and (3) the school's transportation system provides transportation services to individuals with disabilities, including wheelchair users, equivalent to those provided to individuals without disabilities. The test of equivalency is the same as that for other private entities, and is described under § 37.105. If the school does not meet all these criteria, then it is subject to the requirements of Part 37 for private entities not primarily engaged in the business of transporting people.

The Department notes that, given the constitutional law on church-state separation, it is likely that church-affiliated private schools do not receive Federal financial assistance. To the extent that these schools' transportation systems are operated by religious entities or entities controlled by religious organizations, they are not subject to the ADA at all, so this section does not apply to them.

Section 37.29 Private Providers of Taxi Service

This section first recites that providers of taxi service are private entities primarily engaged in the business of transporting people which provide demand responsive service. For purposes of this section, other transportation services that involve calling for a car and a driver to take one places (e.g., limousine services, of the kind that provide luxury cars and chauffeurs for senior proms and analogous adult events) are regarded as taxi services.

Under the ADA, no private entity is required to purchase an accessible automobile. If a taxi company purchases a larger vehicle, like a van, it is subject to the same rules as any other private entity primarily engaged in the business of transporting people which operates a demand responsive service. That is, unless it is already providing equivalent service, any van it acquires must be accessible. Equivalent service is measured according to the criteria of § 37.105. Taxi companies are not required to acquire vehicles other than automobiles to add accessible vehicles to their fleets.

Taxi companies are subject to nondiscrimination obligations. These obligations mean, first, that a taxi service may not deny a ride to an individual with a disability who is capable of using the taxi vehicles. It would be discrimination to pass up a passenger because he or she was blind or used a wheelchair, if the wheelchair was one that could be stowed in the cab and the passenger could transfer to a vehicle seat. Nor could a taxi company insist that a wheelchair user wait for a lift-equipped van if the person could use an automobile.

It would be discrimination for a driver to refuse to assist with stowing a wheelchair in the trunk (since taxi drivers routinely assist passengers with stowing luggage). It would be discrimination to charge a higher fee or fare for carrying a person with a disability than for carrying a non-disabled passenger, or a higher fee for stowing a wheelchair than for stowing a suitcase. (Charging the same fee for stowing a wheelchair as for stowing a suitcase would be proper, however.) The fact that it may take somewhat more time and effort to serve a person with a disability than another passenger does not justify discriminatory conduct with respect to passengers with disabilities.

State or local governments may run user-side subsidy arrangements for the general public (e.g., taxi voucher systems for senior citizens or low-income persons). Under the DOJ title II rule, these programs would have to meet "program accessibility" requirements, which probably would require that accessible transportation be made available to senior citizens or low-income persons with disabilities. This would not directly require private taxi providers who accept the vouchers to purchase accessible vehicles beyond the requirements of this rule, however.

Section 37.31 Vanpools

This provision applies to public vanpool systems the requirements for public entities operating demand responsive systems for the general public. A public vanpool system is one operated by a public entity, or in which a public entity owns or purchases or leases the vehicles. Lesser degrees of public involvement with an otherwise private ridesharing arrangement (e.g., provision of parking spaces, HOV lanes, coordination or clearinghouse services) do not convert a private into a public system.

The requirement for a public vanpool system is that it purchase or lease an accessible vehicle unless it can demonstrate that it provides equivalent service to individuals with disabilities, including individuals who use wheelchairs, as it provides to individuals without disabilities. For a public vanpool system, the equivalency requirement would be met if an accessible vehicle is made available to and used by a vanpool when an individual with a disability needs such a vehicle to participate. Public vanpool systems may meet this requirement through obtaining a percentage of accessible vehicles that is reasonable in light of demand for them by participants, but this is not required, so long as the entity can respond promptly to requests for participation in a vanpool with the provision of an accessible van when needed.

There is no requirement for private vanpools, defined as a voluntary arrangement in which the driver is compensated only for expenses.

Section 37.33 Airport Transportation Systems

Fixed route transportation systems operated by public airports are regarded by

this section as fixed route commuter bus systems. As such, shuttles among terminals and parking lots, connector systems among the airport and a limited number of other local destinations must acquire accessible buses, but are not subject to complementary paratransit requirements. (If a public airport operates a demand responsive system for the general public, it would be subject to the rules for demand responsive systems for the general public.)

It should be noted that this section applies only to transportation services that are operated by public airports themselves (or by private contractors who stand in their shoes). When a regular urban mass transit system serves the airport, the airport is simply one portion of its service area, treated for purposes of this rule like the rest of its service area.

Virtually all airports are served by taxi companies, who are subject to § 37.29 at airports as elsewhere. In addition, many airports are served by jitney or shuttle systems. Typically, these systems operate in a route-deviation or similar variable mode in which there are passenger-initiated decisions concerning destinations. We view such systems as demand responsive transportation operated by private entities primarily engaged in the business of transporting people.

Since many of these operators are small businesses, it may be difficult for them to meet equivalency requirements on their own without eventually having all or nearly all accessible vehicles, which could pose economic problems. One suggested solution to this problem is for the operators serving a given airport to form a pool or consortium arrangement, in which a number of shared accessible vehicles would meet the transportations of individuals with disabilities. As in other forms of transportation, such an arrangement would have to provide service in a nondiscriminatory way (e.g., in an integrated setting, no higher fares for accessible service).

Section 37.35 Supplemental Service for Other Transportation Modes

This section applies to a number of situations in which an operator of another transportation mode uses bus or other service to connect its service with limited other points.

One instance is when an intercity railroad route is set up such that the train stops outside the major urban center which is the actual destination for many passengers. Examples mentioned to us include bus service run by Amtrak from a stop in Columbus, Wisconsin, to downtown Madison, or from San Jose to San Francisco. Such service is fixed route, from the train station to a few points in the metropolitan area, with a schedule keyed to the train schedule. It would be regarded as commuter bus service, meaning that accessible vehicles would have to be acquired but complementary paratransit was not required.

Another instance is one in which a commuter rail operator uses fixed route bus service as a dedicated connection to, or extension of, its rail service. The service may go to park and ride lots or other destinations beyond the vicinity of the rail line. Again, this service shares the characteristics of commuter bus service that might be used even if the rail line were not present, and does not attempt to be a comprehensive mass transit bus service for the area.

Of course, there may be instances in which a rail operator uses demand responsive instead of fixed route service for a purpose of this kind. In that case, the demand responsive system requirements of the rule would apply.

Private entities (i.e., those operating places of public accommodation) may operate similar systems, as when a cruise ship operator provides a shuttle or connector between an airport and the dock. This service is covered by the rules governing private entities not primarily engaged in the business of transporting people. Fixed route or demand responsive rules apply, depending on the characteristics of the system involved.

One situation not explicitly covered in this section concerns *ad hoc* transportation arranged, for instance, by a rail operator when the train does not wind up at its intended destination. For example, an Amtrak train bound for Philadelphia may be halted at Wilmington by a track blockage between the two cities. Usually, the carrier responds by providing bus service to the scheduled destination or to the next point where rail service can resume.

The service that the carrier provides in this situation is essentially a continuation by other means of its primary service. We view the obligation of the rail operator as being to ensure that all passengers, including individuals with disabilities, are provided service to the destination in a nondiscriminatory manner. This includes, for instance, providing service in the most integrated setting appropriate to the needs of the individual and service that gets a passenger with a disability to the destination as soon as other passengers.

Section 37.37 Other Applications

The ADA specifically defines "public entity." Anything else is a "private entity." The statute does not include in this definition a private entity that receives a subsidy or franchise from a state or local government or is regulated by a public entity. Only through the definition of "operates" (see discussion of § 37.23) do private entities' relationships to public entities subject private entities to the requirements for public entities. Consequently, in deciding which provisions of the rule to apply to an entity in other than situations covered by § 37.23, the nature of the entity—public or private—is determinative.

Transportation service provided by public accommodations is viewed as being provided by private entities not primarily engaged in the business of transporting people. Either the provisions of this Part applicable to demand responsive or fixed route systems apply, depending on the nature of a specific system at a specific location. The distinction between fixed route and demand responsive systems is discussed in connection with the definitions section above. It is the responsibility of each private entity, in the first instance, to assess the nature of each transportation system on a case-by-case basis and determine the applicable rules.

On the other hand, conveyances used for recreational purposes, such as amusement park rides, ski lifts, or historic rail cars or trolleys operated in museum settings, are not viewed as transportation under this rule at all. Other conveyances may fit into this category as well.

The criterion for determining what requirements apply is whether the conveyances are primarily an aspect of the recreational experience itself or a means of getting from Point A to Point B. At a theme park, for instance, a large roller coaster (though a "train" of cars on a track) is a public accommodation not subject to this rule; the tram that transports the paying customers around the park, with a stop at the roller coaster, is a transportation system subject to the "private, not primarily" provisions of this part.

Employer-provided transportation for employees is not covered by this Part, but by EEOC rules under title I of the ADA. (Public entities are also subject to DOJ's title II rules with respect to employment.) This exclusion from part 37 applies to transportation services provided by an employer (whether access to motor pool vehicles, parking shuttles, employer-sponsored van pools) that is made available solely to its own employees. If an employer provides service to its own employees and other persons, such as workers of other employers or customers, it would be subject to the requirements of this Part from private entities not primarily engaged in the business of transporting people or public entities, as applicable.

The rule looks to the private entity actually providing the transportation service in question in determining whether the "private, primarily" or "private, not primarily" rules apply. For example, Conglomerate, Inc., owns a variety of agribusiness, petrochemical, weapons system production, and fast food corporations. One of its many subsidiaries, Green Tours, Inc., provides charter bus service for people who want to view National Parks, old-growth forests, and other environmentally significant places. It is probably impossible to say in what business Conglomerate, Inc. is primarily engaged, but it clearly is not transporting people. Green Tours, Inc., on the other hand, is clearly primarily engaged in the business of transporting people, and the rule treats it as such.

On the other hand, when operating a transportation service off to the side of to the main business of a public accommodation (e.g., a hotel shuttle), the entity as a whole would be considered. Even if some dedicated employees are used to provide the service, shuttles and other systems provided as a means of getting to, from, or around a public accommodation remain solidly in the "private, not primarily" category.

Subpart C—Transportation Facilities

Section 37.41 Construction of Transportation Facilities by Public Entities

Section 37.41 contains the general requirement that all new facilities constructed after January 25, 1992, be

accessible to and usable by individuals with disabilities. This provision tracks the statute closely, and is analogous to a provision in the DOJ regulations for private entities. Section 226 of the ADA provides little discretion in this requirement.

The requirement is keyed to construction which "begins" after January 25, 1992. The regulation defines "begin" to mean when a notice to proceed order has been issued. This term has a standard meaning in the construction industry, as an instruction to the contractor to proceed with the work.

Questions have been raised concerning which standards apply before January 26, 1992. There are Federal requirements that apply to all recipients of federal money, depending on the circumstances.

First, if an entity is a Federal recipient and uses Federal dollars to construct the facility, regulations implementing section 504 of the Rehabilitation Act of 1973 (29 U.S.C. 794), require the recipient to comply with the Uniform Federal Accessibility Standards.

Second, since the Civil Rights Restoration Act of 1987 (Pub. L. 100–259), an operation of a recipient of federal funds would also have to comply with section 504, even though the activity was not paid for with Federal funds. Thus, the Uniform Federal Accessibility Standards would apply to this construction as well.

As mentioned above, the Department intends, in the period before January 26, 1991, to view compliance with section 504 in light of compliance with ADA requirements (this point applies to alterations as well as new construction). Consequently, in reviewing requests for grants, contract approvals, exemptions, etc., (whether with respect to ongoing projects or new, experimental, or one-time efforts), the Department will, as a policy matter, seek to ensure compliance with ADA standards.

Section 37.43 Alteration of Transportation Facilities by Public Entities

This section sets out the accessibility requirements that apply when a public entity undertakes an alteration of an existing facility. In general, the section requires that any alteration, to the maximum extent feasible, results in the altered area being accessible to and usable by individuals with disabilities, including persons who use wheelchairs. The provisions follow closely those adopted by the DOJ, in its regulations implementing title III of the ADA.

The section requires specific activities whenever an alteration of an existing facility is undertaken.

First, if the alteration is made to a primary function area, (or access to an area containing a primary function), the entity shall make the alteration in such a way as to ensure that the path of travel to the altered area and the restrooms, telephones and drinking fountains servicing the altered area are readily accessible to and usable by individuals with disabilities, including individuals who use wheelchairs.

Second, alterations to drinking fountains, telephones, and restrooms do not have to be completed if the cost and scope of making them accessible is disproportionate.

Third, the requirement goes into effect for alterations begun after January 25, 1992.

Fourth, the term "maximum extent feasible" means that all changes that are possible must be made. The requirement to make changes to the maximum extent feasible derives from clear legislative history. The Senate Report states—

The phrase "to the maximum extent feasible" has been included to allow for the occasional case in which the nature of an existing facility is such as to make it virtually impossible to renovate the building in a manner that results in its being entirely accessible to and usable by individuals with disabilities. In all such cases, however, the alteration should provide the maximum amount of physical accessibility feasible.

Thus, for example the term "to the maximum extent feasible" should be construed as not requiring entities to make building alterations that have little likelihood of being accomplished without removing or altering a load-bearing structural member unless the load-bearing structural member is otherwise being removed or altered as part of the alteration. (S. Rept. 101–116, at 68).

Fifth, primary function means a major activity for which the facility is intended. Primary function areas include waiting areas, ticket purchase and collection areas, train or bus platforms, baggage checking and return areas, and employment areas (with some exceptions stated in the rule, for areas used by service personnel that are very difficult to access).

Sixth, "path of travel" means a continuous, unobstructed way of pedestrian passage by means of which the altered area may be approached, entered, and exited, and which connects the altered area with an exterior approach and includes restrooms, telephones, and drinking fountains serving the altered area. If changes to the path of travel are disproportionate, then only those changes which are not disproportionate are to be completed.

Seven, the final rule specifies that costs exceeding 20 percent would be disproportionate. This is consistent with the DOJ. In determining costs, the Department intends costs to be based on changes to the passenger service area that is scheduled for alteration.

Finally, the Department has defined the term "begin", in the context of begin an alteration that is subject to the alteration provision to mean when a notice to proceed or work order is issued. Two terms are used (instead of only notice to proceed in the context of new construction) because many alterations may be carried out by the entity itself, in which case the only triggering event would be a work order or similar authorization to begin.

In looking at facility concepts like "disproportionality" and "to the maximum extent feasible," the Department will consider any expenses related to accessibility for passengers. It is not relevant to consider non-passenger related improvements (e.g., installing a new track bed) or to permit "gold-plating" (attributing to accessibility costs the expense of non-related improvements, such as charging to accessibility costs the price of a whole new door, when only adding a new handle to the old door was needed for accessibility).

Section 37.47 Key Stations in Light and Rapid Rail Systems

Section 37.51 Key Stations in Commuter Rail Systems

These sections require that key stations in light, rapid, and commuter rail systems be made accessible as soon as practicable, but no later than July 26, 1993. Being made accessible, for this purpose, means complying with the applicable provisions of appendix A to this part. "As soon as practicable" means that, if modification can be made before July 26, 1993, they must be. A rail operator that failed to make a station accessible by July 1993 would be in noncompliance with the ADA and this rule, except in a case where an extension of time had been granted.

What is a key station? A key station is one designated as such by the commuter authority or light/rapid rail operator, through the planning process and public participation process set forth in this section. The five criteria listed in the regulation are intended to guide the selection process but, while the entity must take these criteria into account (and this consideration must be reflected in the planning process and documents), they are not mandatory selection standards. That is, it is not required that every station that meets one of the criteria be designated as a key station. Since the criteria are not mandatory selection standards, the understanding of their terms is also a matter appropriately left to the planning process. A tight, legalistic definition is not necessary in the context of factors intended for consideration. For instance, what constitutes a major activity center or how close a station needs to be to another station to not be designated as key depend largely on local factors that it would not be reasonable to specify in this rule.

Given the wide discretion permitted to rail operators in identifying key stations, there would be no objection to identifying as a key station a new (presumably accessible) station now under construction. Doing so would involve consideration of the key station criteria and would be subject to the planning/public participation process.

If an extension to a rail system (e.g., a commuter system) is made, such that the system comes to include existing inaccessible stations that have not previously been part of the system, the Department construes the ADA to require application of key station accessibility in such a situation. The same would be true for a new start commuter rail system that began operations using existing stations. Key station planning, designation of key stations, and with being consistent with the ADA would be required. The Department would work with the commuter authority involved on a case-by-case basis to determine applicable time limits for accessibility, consistent with the time frames of the ADA.

The entity must develop a compliance plan, subject to the public participation and planning process set forth in paragraph (d) of each of these sections. Note that this plan must be completed by July 26, 1992, not January 26, 1992, as in the case of paratransit plans. The key station plans must be

submitted to UMTA at that time. (The statute does not require UMTA approval of the plans, however.).

A rail operator may request an extension of the July 1993 completion deadline for accessibility modifications to one or more key stations. The extension for light and rapid rail stations can be up to July 2020, though two thirds of the key stations (per the legislative history of the statute, selected in a way to maximize accessibility to the whole system) must be accessible by July 2010.

Commuter rail stations can be extended up to July 2010.

Requests for extension of time must be submitted by July 26, 1992. UMTA will review the requests on a station-by-station basis according to the statutory criterion, which is whether making the station accessible requires extraordinarily expensive alterations. An extraordinarily expensive alteration is raising the entire platform, installing an elevator, or making another alteration of similar cost and magnitude. If another means of making a station accessible (e.g., installation of a mini-high platform in a station where it is not necessary to install an elevator for to provide access to the platform for wheelchair users), then an extension can be granted only if the rail operator shows that the cost and magnitude of the alteration is similar in to that of an elevator installation or platform raising.

The rule does not include a specific deadline for UMTA consideration of an extension request. However, since we are aware that, in the absence of an extension request, accessibility must be completed by July 1993, we will endeavor to complete review of plans as soon as possible, to give as much lead time as possible to local planning and implementation efforts.

Once an extension is granted, the extension applies to all accessibility modifications in the station. However, the rail operator should not delay non-extraordinarily expensive modifications to the station. The key station plan and any extension request should include a schedule for phasing in non-extraordinarily expensive modifications to the station. For example, even if a key station is not going to be accessible to wheelchair users for 15 years, pending the installation of an elevator, the rail operator can improve its accessibility to persons with visual impairments by installing tactile strips.

An extension cannot be granted except for a particular station which needs an extraordinarily expensive modification. An extension cannot be granted non-extraordinarily expensive changes to Station B because the extraordinarily expensive changes to Station A will absorb many resources. Non-extraordinarily expensive changes, however costly considered collectively for a system, are not, under the statute, grounds for granting an extension to one or more stations or the whole system. Only particular stations where an extraordinarily expensive modification must be made qualify for extensions.

The UMTA Administrator can approve, modify, or disapprove any request for an extension. For example, it is not a forgone conclusion that a situation for which an extension is granted will have the maximum possible extension granted. If it appears that the rail operator can make some stations accessible sooner, UMTA can grant an extension for a shorter period (e.g., 2005 for a particular station rather than 2010).

Section 37.49 Designation of Responsible Person(s) for Intercity and Commuter Rail Stations

This section sets forth a mechanism for determining who bears the legal and financial responsibility for accessibility modifications to a commuter and/or intercity rail station. The final provision of the section is the most important. It authorizes all concerned parties to come to their own agreement concerning the allocation of responsibility. Such an agreement can allocate responsibility in any way acceptable to the parties. The Department strongly encourages parties to come to such an agreement.

In the absence of such an agreement, a statutory/regulatory scheme allocates responsibility. In the first, and simplest, situation posed by the statute, a single public entity owns more than 50 percent of the station. In this case, the public entity is the responsible person and nobody else is required to bear any of the responsibility.

In the second situation, a private entity owns more than 50 percent of the station. The private entity need not bear any of the responsibility for making the station accessible. A public entity owner of the station, who does not operate passenger railroad service through the station, is not required to bear any of the responsibility for making the station accessible. The total responsibility is divided between passenger railroads operating service through the station, on the basis of respective passenger boardings. If there is only one railroad operating service through the station, it bears the total responsibility.

The Department believes that reference to passenger boardings is the most equitable way of dividing responsibility among railroads, since the number of people drawn to the station by each is likely to reflect "cost causation" quite closely. The Department notes, however, that, as passenger boarding percentages change over time, the portion of responsibility assigned to each party also may change. Station modifications may involve long-term capital investment and planning, while passenger boarding percentages are more volatile. Some railroads may stop serving a station, while others may begin service, during the period of time before modifications to the station are complete. To help accommodate such situations, the rule refers to passenger boardings "over the entire period during which the station is made accessible."

This language is intended to emphasize that as circumstances change, the parties involved have the responsibility to adjust their arrangements for cost sharing. For example, suppose Railroad A has 30 percent of the passenger boardings in year 1, but by year 10 has 60 percent of the boardings. It would not be fair for Railroad A to pay only 30 percent of the costs of station modifications occurring in later years. Ultimately, the total cost burden for modifying the station over (for example) 20 years would be allocated on the share of the total number or boardings attributable to each railroad over the whole 20 year period, in order to avoid such unfairness.

The third, and most complicated, situation is one in which no party owns 50 percent of the station. For example, consider the following hypothetical situation:

Party	Ownership percentage	Boardings percentage
Private freight RR	40	0
City	30	0
Amtrak	0	25
Commuter A	30	50
Commuter B	0	25

The private freight railroad drops out of the calculation of who is responsible. All of the responsibility would be allocated among four public entities: the city (a public entity who does not operate railroad service), Amtrak, and the two commuter railroads. Half the responsibility would go to public entity owners of the station (whether or not they are railroads who run passenger service through the station). The other half of the responsibility would go to railroads who run passenger service through the station (whether or not they are station owners).

On the ownership side of the equation, the city and Commuter A each own half of that portion of the station that is not owned by the private freight railroad. Therefore, the two parties divide up the ownership half of the responsibility equally. Based on their ownership interest, each of these two parties bears 25 percent of the responsibility for the entire station. Note that, should ownership percentages or owners change over the period during which the station is to be made accessible, these percentages may change. It is ownership percentage over this entire period that ultimately determines the percentage of responsibility.

On the passenger rail operations side of the equation, 50 percent of passenger boardings are attributable to Commuter A and 25 percent each to Commuter B and Amtrak. Therefore, half of this portion of the responsibility belongs to Commuter A, while a quarter share each goes to the other railroads. This means that, based on passenger boardings, 25 percent of the responsibility goes to Commuter A, 12.5 percent to Commuter B, and 12.5 percent to Amtrak. Again, it is the proportion of passenger boardings over the entire length of the period during which the station is made accessible that ultimately determines the percentage of responsibility.

In this hypothetical, Commuter A is responsible for a total of 50 percent of the responsibility for the station. Commuter A is responsible for 25 percent of the responsibility because of its role as a station owner and another 25 percent because of its operation of passenger rail service through the station.

The Department recognizes that there will be situations in which application of this scheme will be difficult (e.g., involving problems with multiple owners of a station

whose ownership percentages may be difficult to ascertain). The Department again emphasizes that agreement among the parties is the best way of resolving these problems, but we are willing to work with the parties to ensure a solution consistent with this rule.

Section 37.53 Exception for New York and Philadelphia

Consistent with the legislative history of the ADA, this section formally recognizes the selection of key stations in two identified litigation settlement agreements in New York and Philadelphia as in compliance with the ADA. Consequently, the entities involved can limit their key station planning process to issues concerning the timing of key station accessibility. The section references also § 37.9, which provides that key station accessibility alterations which have already been made, or which are begun before January 26, 1992, and which conform to specified prior standards, do not have to be re-modified. On the other hand, alterations begun after January 25, 1992 (including forthcoming key station modifications under the New York and Philadelphia agreements), must meet the requirements of appendix A to this part.

This is an exception only for the two specified agreements. There are no situations in which other cities can take advantage of this provision. Nor are the provisions of the two agreements normative for other cities. Other cities must do their own planning, with involvement from local citizens, and cannot rely on agreements unique to New York and Philadelphia to determine the appropriate number of percentage of key stations or other matters.

Section 37.57 Required Cooperation

This section implements § 242(e)(2)(C) of the ADA, which treats as discrimination a failure, by an owner or person in control of an intercity rail station, to provide reasonable cooperation to the responsible persons' efforts to comply with accessibility requirements. For example, the imposition by the owner of an unreasonable insurance bond from the responsible person as a condition of making accessibility modifications would violate this requirement. See H. Rept. 101–485 at 53.

The statute also provides that failure of the owner or person in control to cooperate does not create a defense to a discrimination suit against the responsible person, but the responsible person would have a third party action against the uncooperative owner or person in control. The rule does not restate this portion of the statute in the regulation, since it would be implemented by the courts if such an action is brought. Since cooperation is also a regulatory requirement, however, the Department could entertain a section 504 complaint against a recipient of Federal funds who failed to cooperate.

The House Energy and Commerce Committee provided as an example of an action under this provision a situation in which a failure to cooperate leads to a construction delay, which in turn leads to a lawsuit by an individual with disabilities against the responsible person for missing an accessibility deadline. The responsible person could not use the lack of cooperation as a defense in the lawsuit, but the uncooperative party could be made to indemnify the responsible person for damages awarded the plaintiff. Also, a responsible person could obtain an injunction to force the recalcitrant owner or controller of the station to permit accessibility work to proceed. (*Id.*)

This provision does not appear to be intended to permit a responsible person to seek contribution for a portion of the cost of accessibility work from a party involved with the station whom the statute and § 37.49 do not identify as a responsible person. It simply provides a remedy for a situation in which someone impedes the responsible person's efforts to comply with accessibility obligations.

Section 37.59 Differences in Accessibility Completion Date Requirements

Portions of the same station may have different accessibility completion date requirements, both as the result of different statutory time frames for different kinds of stations and individual decisions made on requests for extension. The principle at work in responding to such situations is that if part of a station may be made accessible after another part, the "late" part of the work should not get in the way of people's use of modifications resulting from the "early" part.

For example, the commuter part of a station may have to be made accessible by July 1993 (e.g., there is no need to install an elevator, and platform accessibility can be achieved by use of a relatively inexpensive mini-high platform). The Amtrak portion of the same station, by statute, is required to be accessible as soon as practicable, but no later than July 2010. If there is a common entrance to the station, that commuter rail passengers and Amtrak passengers both use, or a common ticket counter, it would have to be accessible by July 1993. If there were a waiting room used by Amtrak passengers but not commuter passengers (who typically stand and wait on the platform at this station), it would not have to be accessible by July 1993, but if the path from the common entrance to the commuter platform went through the waiting room, the path would have to be an accessible path by July 1993.

Section 37.61 Public Transportation Programs and Activities in Existing Facilities

This section implements section 228(a) of the ADA and establishes the general requirement for entities to operate their transportation facilities in a manner that, when viewed in its entirety, is accessible to and usable by individuals with disabilities. The section clearly excludes from this requirement access by persons in wheelchairs, unless these changes would be necessitated by the alterations or key station provisions.

This provision is intended to cover activities and programs of an entity that do not rise to the level of alteration. Even if an entity is not making alterations to a facility, it has a responsibility to conduct its program in an accessible manner. Examples of possible activities include user friendly farecards, schedules, of edge detection on rail platforms, adequate lighting, telecommunication display devices (TDDs) or text telephones, and other accommodations for use by persons with speech and hearing impairments, signage for people with visual impairments, continuous pathways for persons with visual and ambulatory impairments, and public address systems and clocks.

The Department did not prescribe one list of things that would be appropriate for all stations. For example, we believe that tactile strips are a valuable addition to platforms which have drop-offs. We also believe that most larger systems, to the extent they publish schedules, should make those schedules readily available in alternative formats. We encourage entities to find this another area which benefits from its commitment to far-reaching public participation efforts.

Subpart D—Acquisition of Accessible Vehicles by Public Entities

Section 37.71 Purchase or Lease of New Non-Rail Vehicles by Public Entities Operating Fixed Route Systems

This section sets out the basic acquisition requirements for a public entity purchasing a new vehicle. Generally, the section requires any public entity who purchases or leases a new vehicle to acquire an accessible vehicle. There is a waiver provision if lifts are unavailable and these provisions track the conditions in the ADA. One statutory condition, that the public entity has made a good faith effort to locate a qualified manufacturer to supply the lifts, presumes a direct relationship between the transit provider and the lift manufacturer. In fact, it is the bus manufacturer, rather than the transit provider directly, who would have the task of looking for a supplier of lifts to meet the transit provider's specifications. The task must still be performed, but the regulation does not require the transit provider to obtain actual information about available lifts. Rather the bus manufacturer obtains the information and provides this assurance to the entity applying for the waiver, and the entity may rely on this representation. More specifically, the regulation requires that each waiver request must include a copy of the written solicitation (showing that it requested lift-equipped vehicles) and written responses from lift manufacturers to the vehicle manufacturer documenting their inability to provide the lifts. The information from the lift manufacturer must also include when the lifts will be available.

In addition, the waiver request must include copies of advertisements in trade publications and inquiries to trade associations seeking lifts for the buses. The public entity also must include a full justification for the assertion that a delay in the bus procurement sufficient to obtain a lift-equipped bus would significantly impair transportation services in the community. There is no length of time that would be a *per se* delay constituting a "significant impairment". It will be more difficult to obtain a waiver if a relatively short rather than relatively lengthy delay is involved. A showing of timetables, absent a showing of significant impairment of actual transit

services, would not form a basis for granting a waiver.

Any waiver granted by the Department under this provision will be a conditional waiver. The conditions are intended to ensure that the waiver provision does not create a loophole in the accessible vehicle acquisition requirement that Congress intended to impose. The ADA requires a waiver to be limited in duration and the rule requires a termination date to be included. The date will be established on the basis of the information the Department receives concerning the availability of lifts in the waiver request and elsewhere. In addition, so that a waiver does not become open-ended, it will apply only to a particular procurement. If a transit agency wants a waiver for a subsequent delivery of buses in the procurement, or another procurement entirely, it will have to make a separate waiver request.

For example, if a particular order of buses is delivered over a period of time, each delivery would be the potential subject of a waiver request. First, the entity would request a waiver for the first shipment of buses. If all of the conditions are met, the waiver would be granted, with a date specified to coincide with the due date of the lifts. When the lifts become available those buses would have to be retrofitted with the lifts. A subsequent delivery of buses—on the same order—would have to receive its own waiver, subject to the same conditions and specifications of the first waiver.

The purpose of the waiver, as the Department construes it, is to address a situation in which (because of a sudden increase in the number of lift-equipped buses requested) lift manufacturers are unable to produce enough lifts to meet the demand in a timely fashion.

Section 37.73 Purchase or Lease of Used Non-Rail Vehicles by Public Entities Operating a Fixed Route System

The basic rule is that an acquisition of a used vehicle would have to be for an accessible vehicle.

There is an exception, however, for situations in which the transit provider makes a good faith effort to obtain accessible used vehicles but does not succeed in finding them. The ADA requires transit agencies to purchase accessible used vehicles, providing a "demonstrated good faith efforts" exception to the requirement. The reports of the Senate Committee on Labor and Human Resources and the House Committee on Education and Labor offered the following guidance on what "good faith efforts" involve:

The phrase "demonstrated good faith efforts" is intended to require a nationwide search and not a search limited to a particular region. For instance, it would not be enough for a transit operator to contact only the manufacturer where the transit authority usually does business to see if there are accessible used buses. It involves the transit authority advertising in a trade magazine, i.e., Passenger Transport, or contacting the transit trade association, American Public Transit Association (APTA), to determine whether accessible used vehicles are available. It is the Committee's expectation that as the number of buses with lifts increases, the burden on the transit authority to demonstrate its inability to purchase accessible vehicles despite good faith efforts will become more and more difficult to satisfy. S.Rept. 101–116 at 49; H.Rept. 101–485 at 90.

Consistent with this guidance, this section requires that good faith efforts include specifying accessible vehicles in bid solicitations. The section also requires that the entity retain for two years documentation of that effort, and that the information be available to UMTA and the public.

It does not meet the good faith efforts requirement to purchase inaccessible, rather than accessible, used buses, just because the former are less expensive, particularly if the difference is a difference attributable to the presence of a lift. There may be situations in which good faith efforts involve buying fewer accessible buses in preference to more inaccessible buses.

The public participation requirements involved in the development of the paratransit plans for all fixed route operators requires an ongoing relationship, including extensive outreach, to the community likely to be using its accessible service. We believe that it will be difficult to comply with the public participation requirements and not involve the affected community in the decisions concerning the purchase or lease of used accessible vehicles.

There is an exception to these requirements for donated vehicles. Not all "zero dollar" transfers are donations, however. The legislative history to this provision provides insight.

It is not the Committee's intent to make the vehicle accessibility provisions of this title applicable to vehicles donated to a public entity. The Committee understands that it is not usual to donate vehicles to a public entity. However, there could be instances where someone could conceivably donate a bus to a public transit operator in a will. In such a case, the transit operators should not be prevented from accepting a gift.

The Committee does not intend that this limited exemption for donated vehicles be used to circumvent the intent of the ADA. For example, a local transit authority could not arrange to be the recipient of donated inaccessible buses. This would be a violation of the ADA. S. Rpt. 101–116, at 46; H. Rpt. 101–486, at 87.

Entities interested in accepting donated vehicles must submit a request to UMTA to verify that the transaction is a donation.

There is one situation, in which a vehicle has prior use is not treated as a used vehicle. If a vehicle has been remanufactured, and it is within the period of the extension of its useful life, it is not viewed as a used vehicle (see H. Rept. 101–485, Pt 1 at 27). During this period, such a vehicle may be acquired by another entity without going through the good faith efforts process. This is because, at the time of its remanufacture, the bus would have been made as accessible if feasible. When the vehicle has completed its extended useful life (e.g., the beginning of year six when its useful life has extended five years), it becomes subject to used bus requirements.

Section 37.75 Remanufacture of Non-Rail Vehicles and Purchase or Lease of Remanufactured Non-rail Vehicles by Public Entities Operating Fixed Route Systems

This section tracks the statute closely, and contains the following provisions. First, it requires any public entity operating a fixed route system to purchase an accessible vehicle if the acquisition occurs after August 25, 1990, if the vehicle is remanufactured after August 25, 1990, or the entity contracts or undertakes the remanufacture of a vehicle after August 25, 1990. The ADA legislative history makes it clear that remanufacture is to include changes to the structure of the vehicle which extend the useful life of the vehicle for five years. It clearly is not intended to capture things such as engine overhauls and the like.

The term remanufacture, as used in the ADA context, is different from the use of the term in previously issued UMTA guidance. The term has a specific meaning under the ADA: there must be structural work done to the vehicle and the work must extend the vehicle's useful life by five years.

The ADA imposes no requirements on what UMTA traditionally considers bus rehabilitation. Such work involves rebuilding a bus to original specifications and focuses on mechanical systems and interiors. Often this work includes replacing components. It is less extensive than remanufacture.

The statute, and the rule, includes an exception for the remanufacture of historical vehicles. This exception applies to the remanufacture of or purchase of a remanufactured vehicle that (1) is of historic character; (2) operates solely on a segment of a fixed route system which is on the National Register of Historic Places; and (3) making the vehicle accessible would significantly alter the historic character of the vehicle. The exception only extends to the remanufacture that would alter the historic character of the vehicle. All modifications that can be made without altering the historic character (such as slip resistant flooring) must be done.

Section 37.77 Purchase or Lease of New Non-Rail Vehicles by Public Entities Operating a Demand Responsive System for the General Public

Section 224 of the ADA requires that a public entity operating a demand responsive system purchase or lease accessible new vehicles, for which a solicitation is made after August 25, 1990, unless the system, when viewed in its entirety, provides a level of service to individuals with disabilities, including individuals who use wheelchairs, equivalent to the level of service provided to individuals without disabilities. This section is the same as the October 4, 1990 final rule which promulgated the immediately effective acquisition requirements of the ADA.

The Department has been asked to clarify what "accessible when viewed in its entirety" means in the context of a demand responsive system being allowed to purchase an inaccessible vehicle. First, it is important to note that this exception applies only to demand responsive systems (and not fixed route systems). The term "equivalent service" was discussed during the passage of the

ADA. Material from the legislative history indicates that "when viewed in its entirety/equivalent service" means that "when all aspects of a transportation system are analyzed, equal opportunities for each individual with a disability to use the transportation system must exist. (H. Rept. 101–184, Pt. 2, at 95; S. Rept. 101–116 at 54). For example, both reports said that "the time delay between a phone call to access the demand responsive system and pick up the individual is not greater because the individual needs a lift or ramp or other accommodation to access the vehicle." (*Id.*)

Consistent with this, the Department has specified certain service criteria that are to be used when determining if the service is equivalent. As in previous rulemakings on this provision, the standards (which include service area, response time, fares, hours and days of service, trip purpose restrictions, information and reservations capability, and other capacity constraints) are not absolute standards. They do not say, for example, that a person with a disability must be picked up in a specified number of hours. The requirement is that there must be equivalent service for all passengers, whether or not they have a disability. If the system provides service to persons without disabilities within four hours of a call for service, then passengers with disabilities must be afforded the same service.

The Department has been asked specifically where an entity should send its "equivalent level of service" certifications. We provide the following: Equivalent level of service certifications should be submitted to the state program office if you are a public entity receiving UMTA funds through the state. All other entities should submit their equivalent level of service certifications to the UMTA regional office (listed in appendix B of this part). Certifications must be submitted before the acquisition of the vehicles.

Paragraph (e) of this section authorizes a waiver for the unavailability of lifts. Since demand responsive systems need not purchase accessible vehicles if they can certify equivalent service, the Department has been asked what this provision is doing in this section.

Paragraph (e) applies in the case in which an entity operates a demand responsive system, which is not equivalent, and the entity cannot find accessible vehicles to acquire. In this case, the waiver provisions applicable to a fixed route entity purchasing or leasing inaccessible new vehicles applies to the demand responsive operator as well.

Section 37.79 Purchase or Lease of New Rail Vehicles by Public Entities Operating Rapid or Light Rail Systems

This section echoes the requirement of § 37.71—all new rail cars must be accessible.

Section 37.81 Purchase or Lease of Used Rail Vehicles by Public Entities Operating Rapid or Light Rail Systems

This section lays out the requirements for a public entity acquiring a used rail vehicle. The requirements and standards are the same as those specified for non-rail vehicles in § 37.73. While we recognize it may create difficulties for entities in some situations, the statute does not include any extension or short-term leases. The Department will consider, in a case-by-case basis, how the good faith efforts requirement would apply in the case of an agreement between rail carriers to permit quick-response, short-term leases of cars over a period of time.

Section 37.83 Remanufacture of Rail Vehicles and Purchase or Lease of Remanufactured Rail Vehicles by Public Entities Operating Rapid or Light Rail System

This section parallels the remanufacturing section for buses, including the exception for historical vehicles. With respect to an entity having a class of historic vehicles that may meet the standards for the historic vehicle exception (e.g., San Francisco cable cars), the Department would not object to a request for application of the exception on a system-wide, as approved to car-by-car, basis.

Section 37.85 Purchase or Lease of New Intercity and Commuter Rail Cars

This section incorporates the statutory requirement that new intercity and commuter rail cars be accessible. The specific accessibility provisions of the statute (for example, there are slightly different requirements for intercity rail cars versus commuter rail cars) are specified in part 38 of this regulation. These standards are adopted from the voluntary guidelines issues by the Access Board. The section basically parallels the acquisition requirements for buses and other vehicles. It should be noted that the definition of commuter rail operator clearly allows for additional operators to qualify as commuter, since the definition describes the functional characteristics of an operator, as well as listing existing commuter rail operators.

We would point out that the ADA applies this requirement to all new vehicles. This includes not only vehicles and systems that currently are being operated in the U.S., but new, experimental, or imported vehicles and systems. The ADA does not stand in the way of new technology, but it does require that new technology, and the benefits it brings, be accessible to all persons, including those with disabilities. This point applies to all vehicle acquisition provisions of this regulation, whether for rail or non-rail, private or public, fixed route or demand responsive vehicles and systems.

Section 37.87 Purchase or Lease of Used Intercity and Commuter Rail Cars

The section also parallels closely the requirements in the ADA for the purchase or lease of accessible used rail vehicles. We acknowledge that, in some situations, the statutory requirement for to make good faith efforts to acquire accessible used vehicles may create difficulties for rail operators attempting to lease rail cars quickly for a short time (e.g., as fill-ins for cars which need repairs). In some cases, it may be possible to mitigate these difficulties through means such as making good faith efforts with respect to an overall agreement between two rail operators to make cars available to one another when needed, rather than each time a car is provided under such an agreement.

Section 37.89 Remanufacture of Intercity and Commuter Rail Cars

This section requires generally that remanufactured cars be made accessible, to the maximum extent feasible. Feasible is defined in paragraph (c) of the section to be "unless an engineering analysis demonstrates that remanufacturing the car to be accessible would have a significant adverse effect on the structural integrity of the car." Increased cost is not a reason for viewing other sections of this subpart concerning remanufactured vehicles.

In addition, this section differs from the counterpart sections for non-rail vehicles and light and rapid rail vehicles in two ways. First, the extension of useful life needed to trigger the section is ten rather than five years. Second, there is no historic vehicle exception. Both of these differences are statutory.

Remanufacture of vehicles implies work that extends their expected useful life of the vehicle. A mid-life overhaul, not extending the total useful life of the vehicle, would not be viewed as a remanufacture of the vehicle.

Section 37.93—One Car Per Train Rule

This section implements the statutory directive that all rail operators (light, rapid, commuter and intercity) have at least one car per train accessible to persons with disabilities, including individuals who use wheelchairs by July 26, 1995. (See ADA sections 242(a)(1), 242(b)(1), 228(b)(1).) Section 37.93 contains this general requirement. In some cases, entities will meet the one-car-per train rule through the purchase of new cars. In this case, since all new rail vehicles have to be accessible, compliance with this provision is straightforward.

However, certain entities may not be purchasing any new vehicles by July 26, 1995, or may not be purchasing enough vehicles to ensure that one car per train is accessible. In these cases, these entities will have to retrofit existing cars to meet this requirement. What a retrofitted car must look like to meet the requirement has been decided by the Access Board. These standards are contained in part 38 of this rule.

We would point that, consistent with the Access Board standards, a rail system using mini-high platforms or wayside lifts is not required, in most circumstances, to "double-stop" in order to give passengers a chance to board the second or subsequent car in a train at the mini-high platform or way-side lift. The only exception to this would be a situation in which all the wheelchair positions spaces in the first car were occupied. In this case, the train would have to double-stop to allow a wheelchair user to board, rather than passing the person by when there was space available in other than the first car.

Section 37.95 Ferries and Other Passenger Vessels

Although at this time there are no specific requirements for vessels, ferries and other passenger vessels operated by public entities are subject to the requirements of § 37.5 of this part and applicable requirements of 28

CFR part 35, the DOJ rule under title II of the ADA.

Subpart E—Acquisition of Accessible Vehicles by Private Entities

Section 37.101 Purchase or Lease of Non-Rail Vehicles by Private Entities Not Primarily Engaged in the Business of Transporting People

Section 37.103 Purchase or Lease of New Non-Rail Vehicles by Private Entities Primarily Engaged in the Business of Transporting People

Section 37.105 Equivalent Service Standard

The first two sections spell out the distinctions among the different types of service elaborated in the ADA and requirements that apply to them. For clarity, we provide the following chart.

PRIVATE ENTITIES "NOT PRIMARILY ENGAGED"

System type	Vehicle capacity	Requirement
Fixed Route	Over 16	Acquire accessible vehicle.
Fixed Route	16 or less	Acquire accessible vehicle, or equivalency.
Demand Responsive.	Over 16	Acquire accessible vehicle, or equivalency.
Demand Responsive.	16 or less	Equivalency—see § 37.171.

PRIVATE ENTITIES "PRIMARILY ENGAGED"

System type	Vehicle type/capacity	Requirement
Fixed route	All new vehicles except auto, van with less than 8 capacity, or over the road bus.	Acquire accessible vehicle.
Demand responsive.	Same as above	Acquire accessible vehicle, or equivalency.
Either fixed route or demand responsive.	New vans with a capacity of less than 8.	Same as above.

Equivalency, for purposes of these requirements, is spelled out in § 37.105. It is important to note that some portions of this section (referring to response time, reservations capacity, and restrictions on trip purpose) apply only to demand responsive systems. Another provision (schedules/headways) applies only to fixed route systems. This is because these points of comparison apply only to one or the other type system. The remaining provisions apply to both kinds of systems.

In applying the provisions this section, it is important to note that they are only points of comparison, not substantive criteria. For example, unlike the response time criterion of § 37.131, this section does not require that a system provide any particular response time. All it says is that, in order for there to be equivalency, if the demand responsive system gets a van to a non-disabled person in 2 hours, or 8 hours, or a week and a half after a call for service, the system must get an accessible van to a person with a disability in 2 hours, or 8 hours, or a week and a half.

The vehicle acquisition and equivalency provisions work together in the following way. A private entity is about to acquire a vehicle for a transportation service in one of the categories to which equivalency is relevant. The entity looks at its present service (considered without regard to the vehicle it plans to acquire). Does the present service meet the equivalency standard? (In answering this question, the point of reference is the next potential customer who needs an accessible vehicle. The fact that such persons have not called in the past is irrelevant). If not, the entity is required to acquire an accessible vehicle. If so, the entity may acquire an accessible or an inaccessible vehicle. This process must be followed every time the entity purchases or leases a vehicle. Given changes in the mixes of both customers and vehicles, the answer to the question about equivalency will probably not be the same for an entity every time it is asked.

One difference between the requirements for "private, not primarily" and "private, primarily" entities is that the requirements apply to all vehicles purchased or leased for the former, but only to new vehicles for the latter. This means that entities in the latter category are not required to acquire accessible vehicles when they purchase or lease used vehicles. Another oddity in the statute which entities should note is that the requirement for "private, primarily" entities to acquire accessible vans with less than eight passenger capacity (or provide equivalent service) does not become effective until after February 25, 1992 (This also date also applies no private entities "primarily engaged" which purchase passenger rail cars). All other vehicle acquisition requirements became effective after August 25, 1990.

The Department views the line between "private, primarily" and "private, not primarily" entities as being drawn with respect to the bus, van, or other service which the entity is providing. For example, there is an obvious sense in which an airline or car rental company is primarily engaged in the business of transporting people. If the airline or car rental agency runs a shuttle bus from the airport terminal to a downtown location or a rental car lot, however, the Department views that shuttle service as covered by the "private, not primarily" requirements of the rule (see discussion of the Applicability sections above). This is because the airline or car rental agency is not primarily engaged in the business of providing transportation by bus or van. The relationship of the bus or van service to an airline's main business is analogous to that of a shuttle to a hotel. For this purpose, it is of only incidental interest that the main business of the airline is flying people around the country instead of putting them up for the night.

Section 37.109 Ferries and Other Passenger Vessels

Although at this time there are no specific requirements for vessels, ferries and other passenger vessels operated by private entities are subject to the requirements of § 37.5 of this part and applicable requirements of 28 CFR part 36, the DOJ rule under title III of the ADA.

Subpart F—Paratransit as a Complement to Fixed Route Service

Section 37.121 Requirement for Comparable Complementary Paratransit Service

This section sets forth the basic requirement that all public entities who operate a fixed route system have to provide paratransit service that is both comparable and complementary to the fixed route service. By "complementary," we mean service that acts as a "safety net" for individuals with disabilities who cannot use the fixed route system. By "comparable," we mean service that meets the service criteria of this subpart.

This requirement applies to light and rapid rail systems as well as to bus systems, even when rail and bus systems share all or part of the same service area. Commuter bus, commuter rail and intercity rail systems do not have to provide paratransit, however. The remaining provisions of subpart F set forth the details of the eligibility requirements for paratransit, the service criteria that paratransit systems must meet, the planning process involved, and the procedures for applying for waivers based on undue financial burden.

Paratransit may be provided by a variety of modes. Publicly operated dial-a-ride vans, service contracted out to a private paratransit provider, user-side subsidy programs, or any combination of these and other approaches is acceptable. Entities who feel it necessary to apply for an undue financial burden waiver should be aware that one of the factors UMTA will examine in evaluating waiver requests is efficiencies the provider could realize in its paratransit service. Therefore, it is important for entities in this situation to use the most economical and efficient methods of providing paratransit they can devise.

It is also important for them to establish and consistently implement strong controls against fraud, waste and abuse in the paratransit system. Fraud, waste and abuse can drain significant resources from a system and control of these problems is an important "efficiency for any paratransit system. It will be difficult for the Department to grant an undue financial burden waiver to entities which do not have a good means of determining if fraud, waste and abuse are problems and adequate methods of combating these problems, where they are found to exist.

Section 37.123 ADA Paratransit Eligibility—Standards

General Provisions

This section sets forth the minimum requirements for eligibility for

complementary paratransit service. All fixed route operators providing complementary paratransit must make service available at least to individuals meeting these standards. The ADA does not prohibit providing paratransit service to anyone. Entities may provide service to additional persons as well. Since only service to ADA eligible persons is required by the rule, however, only the costs of this service can be counted in the context of a request for an undue financial burden waiver.

When the rule says that ADA paratransit eligibility shall be strictly limited to persons in the eligible categories, then, it is not saying that entities are in any way precluded from serving other people. It is saying that the persons who must be provided service, and counting the costs of providing them service, in context of an undue burden waiver, are limited to the regulatory categories.

Temporary Disabilities

Eligibility may be based on a temporary as well as a permanent disability. The individual must meet one of the three eligibility criteria in any case, but can do so for a limited period of time. For example, if an individual breaks both legs and is in two casts for several weeks, becomes a wheelchair user for the duration, and the bus route that would normally take him to work is not accessible, the individual could be eligible under the second eligibility category. In granting eligibility to such a person, the entity should establish an expiration date for eligibility consistent with the expected end of the period disability.

Trip-by-Trip Eligibility

A person may be ADA paratransit eligible for some trips but not others. Eligibility does not inhere in the individual or his or her disability, as such, but in meeting the functional criteria of inability to use the fixed route system established by the ADA. This inability is likely to change with differing circumstances.

For example, someone whose impairment-related condition is a severe sensitivity to temperatures below 20 degrees is not prevented from using fixed route transit when the temperature is 75 degrees. Someone whose impairment-related condition is an inability to maneuver a wheelchair through snow is not prevented from using fixed route transit when there is no snow on the ground. Someone with a cognitive disability may have learned to take the same bus route to a supported employment job every day. This individual is able to navigate the system for work purposes and therefore would not be eligible for paratransit for work trips. But the individual may be unable to get to other destinations on the bus system without getting lost, and would be eligible for paratransit for non-work trips. Someone who normally drives his own car to a rail system park and ride lot may have a specific impairment related condition preventing him from getting to the station when his car is in the shop. A person who can use accessible fixed route service can go to one destination on an accessible route; another destination would require the use of an inaccessible route. The individual would be eligible for the latter but not the former.

In many cases, though the person is eligible for some trips but not others, eligibility determinations would not have to be made literally on a trip-by-trip basis. It may often be possible to establish the conditions on eligibility as part of the initial eligibility determination process. Someone with a temperature sensitivity might be granted seasonal eligibility. Somebody who is able to navigate the system for work but not non-work trips could have this fact noted in his or her eligibility documentation. Likewise, someone with a variable condition (e.g., multiple sclerosis, HIV disease, need for kidney dialysis) could have their eligibility based on the underlying condition, with paratransit need for a particular trip dependent on self-assessment or a set of medical standards (e.g., trip within a certain amount of time after a dialysis session). On the other hand, persons in the second eligibility category (people who can use accessible fixed route service where it exists) would to be given service on the basis of the particular route they would use for a given trip.

Because entities are not precluded from providing service beyond that required by the rule, an entity that believes it is too difficult to administer a program of trip-by-trip eligibility is not required to do so. Nothing prevents an entity from providing all requested trips to a person whom the ADA requires to receive service for only some trips. In this case, if the entity intends to request an undue financial burden waiver, the entity, as provided in the undue burden provisions of this rule, must estimate, by a statistically valid technique, the percentage of its paratransit trips that are mandated by the ADA. Only that percentage of its total costs will be counted in considering the undue burden waiver request.

Category 1 Eligibility

The first eligibility category includes, among others, persons with mental or visual impairments who, as a result, cannot "navigate the system." This eligibility category includes people who cannot board, ride, or disembark from an accessible vehicles "without the assistance of another individual." This means that, if an individual needs an attendant to board, ride, or disembark from an accessible fixed route vehicles (including "navigating the system"), the individual is eligible for paratransit. One implication of this language is that an individual does not lose paratransit eligibility based on "inability to navigate the system" because the individual chooses to travel with a friend on the paratransit system (even if the friend could help the person navigate the fixed route system). Eligibility in this category is based on ability to board, ride, and disembark independently.

Mobility training (e.g., of persons with mental or visual impairments) may help to improve the ability of persons to navigate the system or to get to a bus stop. Someone who is successfully mobility trained to use the fixed route system for all or some trips need not be provided paratransit service for those trips. The Department encourages entities to sponsor such training as a means of assisting individuals to use fixed route rather than paratransit.

Category 2 Eligibility

The second eligibility criterion is the broadest, with respect to persons with mobility impairments, but its impact should be reduced over time as transit systems become more accessible. This category applies to persons who could use accessible fixed route transportation, but accessible transportation is not being used at the time, and on the route, the persons would travel. This concept is route based, not system based.

Speaking first of bus systems, if a person is traveling from Point A to Point B on route 1, and route 1 is accessible, the person is not eligible for paratransit for the trip. This is true even though other portions of the system are still inaccessible. If the person is traveling from Point A to Point C on route 2, which is not accessible, the person is eligible for that trip. If the person is traveling from point A to Point B on accessible route 1, with a transfer at B to go on inaccessible route 3 to Point D, then the person is eligible for the second leg of the trip. (The entity could choose to provide a paratransit trip from A to D or a paratransit or on-call bus trip from B to D.)

For purposes of this standard, we view a route as accessible when all buses scheduled on the route are accessible. Otherwise, it is unlikely that an accessible vehicle could be provided "within a reasonable period of [a] time" when the individual wants to travel, as the provision requires. We recognize that some systems' operations may not be organized in a way that permits determining whether a given route is accessible, even though a route-by-route determination appears to be contemplated by the statute. In such cases, it may be that category 2 eligibility would persist until the entire system was eligible.

With respect to a rail system, an individual is eligible under this standard if, on the route or line he or she wants to use, there is not yet one car per train accessible or if key stations are not yet accessible. This eligibility remains even if bus systems covering the area served by the rail system have become 100 percent accessible. This is necessary because people use rail systems for different kinds of trips than bus systems. It would often take much more in the way of time, trouble, and transfers for a person to go on the buses of one or more transit authorities than to have a direct trip provided by the rail operator. Since bus route systems are often designed to feed rail systems rather than duplicate them, it may often be true that " you can't get there from here" relying entirely on bus routes or the paratransit service area that parallels them.

If the lift on a vehicle cannot be deployed at a particular stop, an individual is eligible for paratransit under this category with respect to the service to the inaccessible stop. If on otherwise accessible route 1, an individual wants to travel from Point A to Point E, and the lift cannot be deployed at E, the individual is eligible for paratransit for the trip. (On-call bus would not work as a mode of providing this trip, since a bus lift will not deploy at the stop.) This is true even though service from Point A to all other points on the line is fully accessible. In this

circumstance, the entity should probably think seriously about working with the local government involved to have the stop moved or made accessible.

When we say that a lift cannot be deployed, we mean literally that the mechanism will not work at the location to permit a wheelchair user or other person with a disability to disembark or that the lift will be damaged if it is used there. It is not consistent with the rule for a transit provider to declare a stop off-limits to someone who uses the lift while allowing other passengers to use the stop. However, if temporary conditions not under the operator's control (e.g., construction, an accident, a landslide) make it so hazardous for anyone to disembark that the stop is temporarily out of service for all passengers may the operator refuse to allow a passenger to disembark using the lift.

Category 3 Eligibility

The third eligibility criterion concerns individuals who have a specific impairment-related condition which prevents them from getting to or from a stop or station. As noted in the legislative history of the ADA, this is intended to be a "very narrow exception" to the general rule that difficulty in traveling to or from boarding or disembarking locations is not a basis for eligibility.

What is a specific impairment-related condition? The legislative history mentions four examples: Chronic fatigue, blindness, a lack of cognitive ability to remember and follow directions, or a special sensitivity to temperature. Impaired mobility, severe communications disabilities (e.g., a combination of serious vision and hearing impairments), cardiopulmonary conditions, or various other serious health problems may have similar effects. The Department does not believe that it is appropriate, or even possible, to create an exhaustive list.

What the rule uses as an eligibility criterion is not just the existence of a specific impairment-related condition. To be a basis for eligibility, the condition must prevent the individual from traveling to a boarding location or from a disembarking location. The word "prevent" is very important. For anyone, going to a bus stop and waiting for a bus is more difficult and less comfortable than waiting for a vehicle at one's home. This is likely to be all the more true for an individual with a disability. But for many persons with disabilities, in many circumstances, getting to a bus stop is possible. If an impairment related condition only makes the job of accessing transit more difficult than it might otherwise be, but does not prevent the travel, then the person is not eligible.

For example, in many areas, there are not yet curb cuts. A wheelchair user can often get around this problem by taking a less direct route to a destination than an ambulatory person would take. That involves more time, trouble, and effort than for someone without a mobility impairment. But the person can still get to the bus stop. On the basis of these architectural barriers, the person would not be eligible.

Entities are cautioned that, particularly in cases involving lack of curb cuts and other architectural barrier problems, assertions of eligibility should be given tight scrutiny. Only if it is apparent from the facts of a particular case that an individual cannot find a reasonable alternative path to a location should eligibility be granted.

If we add a foot of snow to the scenario, then the same person taking the same route may be unable to get to the bus stop. If is not the snow alone that stops him; it is the interaction of the snow and the fact that the individual has a specific-impairment related condition that requires him to push a wheelchair through the snow that prevents the travel.

Inevitably, some judgment is required to distinguish between situations in which travel is prevented and situations in which it is merely made more difficult. In the Department's view, a case of "prevented travel" can be made not only where travel is literally impossible (e.g., someone cannot find the bus stop, someone cannot push a wheelchair through the foot of snow or up a steep hill) but also where the difficulties are so substantial that a reasonable person with the impairment-related condition in question would be deterred from making the trip.

The regulation makes the interaction between an impairment-related condition and the environmental barrier (whether distance, weather, terrain, or architectural barriers) the key to eligibility determinations. This is an individual determination. Depending on the specifics of their impairment-related condition, one individual may be able to get from his home to a bus stop under a given set of conditions, while his next-door neighbor may not.

Companions

The ADA requires entities to provide paratransit to one person accompanying the eligible individual, with others served on a space-available basis. The one individual who is guaranteed space on the vehicle can be anyone—family member, business associate, friend, date, etc. The provider cannot limit the eligible individual's choice of type of companion. The transit authority may require that the eligible individual reserve a space for the companion when the individual reserves his or her own ride. This one individual rides even if this means that there is less room for other eligible individuals. Additional individuals beyond the first companion are carried only on a space available basis; that is, they do not displace other ADA paratransit eligible individuals.

A personal care attendant (i.e., someone designated or employed specifically to help the eligible individual meet his or her personal needs) always may ride with the eligible individual. If there is a personal care attendant on the trip, the eligible individual may still bring a companion, plus additional companions on a space available basis. The entity may require that, in reserving the trip, the eligible individual reserve the space for the attendant.

To prevent potential abuse of this provision, the rule provides that a companion (e.g., friend or family member) does not count as a personal care attendant unless the eligible individual regularly makes use of a personal care attendant and the companion is actually acting in that capacity. As noted under § 37.125, a provider may require that, as part of the initial eligibility certification process, an individual indicate whether he or she travels with a personal care attendant. If someone does not indicate the use of an attendant, then any individual accompanying him or her would be regarded simply as a companion.

To be viewed as "accompanying" the eligible individual, a companion must have the same origin and destination points as the eligible individual. In appropriate circumstances, entities may also wish to provide service to a companion who has either an origin or destination, but not both, with the eligible individual (e.g., the individual's date is dropped off at her own residence on the return trip from a concert).

Section 37.125 ADA Paratransit Eligiblity—Process

This section requires an eligibilty process to be established by each operator of complementary paratransit. The details of the process are to be devised through the planning and public participation process of this subpart. The process may not impose unreasonable administrative burdens on applicants, and, since it is part of the entity's nondiscrimination obligations, may not involve "user fees" or application fees to the applicant.

The process may include functional criteria related to the substantive eligibility criteria of § 37.123 and, where appropriate, functional evaluation or testing of applicants. The substantive eligibility process is not aimed at making a medical or diagnostic determination. While evaluation by a physician (or professionals in rehabilitation or other relevant fields) may be used as part of the process, a diagnosis of a disability is not dispositive. What is needed is a determination of whether, as a practical matter, the individual can use fixed route transit in his or her own circumstances. That is a transportation decision primarily, not a medical decision.

The goal of the process is to ensure that only people who meet the regulatory criteria, strictly applied, are regarded as ADA paratransit eligible. The Department recognizes that transit entities may wish to provide service to other persons, which is not prohibited by this rule. However, the eligibility process should clearly distinguish those persons who are ADA eligible from those who are provided service on other grounds. For example, eligibility documentation must clearly state whether someone is ADA paratransit eligible or eligible on some other basis.

Often, people tend to think of paratransit exclusively in terms of people with mobility impairments. Under the ADA, this is not accurate. Persons with visual impairments may be eligible under either the first or third eligibility categories. To accommodate them, all documents concerning eligibility must be made available in one or more accessible formats, on request. Accessible formats include computer disks, braille documents, audio cassettes, and large print documents. A document does not necessarily need to be made available in the format a requester prefers, but it does have to be made available

in a format the person can use. There is no use giving a computer disk to someone who does not have a computer, for instance, or a braille document to a person who does not read braille.

When a person applies for eligibility, the entity will provide all the needed forms and instructions. These forms and instructions may include a declaration of whether the individual travels with a personal care attendant. The entity may make further inquiries concerning such a declaration (e.g., with respect to the individual's actual need for a personal care attendant).

When the application process is complete—all necessary actions by the applicant taken—the entity should process the application in 21 days. If it is unable to do so, it must begin to provide service to the applicant on the 22nd day, as if the application had been granted. Service may be terminated only if an when the entity denies the application. All determinations shall be in writing; in the case of a denial, reasons must be specified. The reasons must specifically relate the evidence in the matter to the eligibility criteria of this rule and of the entity's process. A mere recital that the applicant can use fixed route transit is not sufficient.

For people granted eligibility, the documentation of eligibility shall include at least the following information:

—The individual's name
—The name of the transit provider
—The telephone number of the entity's paratransit coordinator
—An expiration date for eligibility
—Any conditions or limitations on the individual's eligibility, including the use of a personal care attendant.

The last point refers to the situation in which a person is eligible for some trips but not others. Or if the traveler is authorized to have a personal care attendant ride free of charge. For example, the documentation may say that the individual is eligible only when the temperature falls below a certain point, or when the individual is going to a destination not on an accessible bus route, or for non-work trips, etc.

As the mention of an expiration date implies, certification is not forever. The entity may recertify eligibility at reasonable intervals to make sure that changed circumstances have not invalidated or changed the individual's eligibility. In the Department's view, a reasonable interval for recertification is probably between one and three years. Less than one year would probably be too burdensome for consumers; over three years would begin to lose the point of doing recertifications. The recertification interval should be stated in the entity's plan. Of course, a user of the service can apply to modify conditions on his or her eligibility at any time.

The administrative appeal process is intended to give applicants who have been denied eligibility the opportunity to have their cases heard by some official other than the one who turned them down in the first place. In order to have appropriate separation of functions—a key element of administrative due process—not only must the same person not decide the case on appeal, but that person, to the extent practicable, should not have been involved in the first decision (e.g., as a member of the same office, or a supervisor or subordinate of the original decisionmaker). When, as in the case of a small transit operator, this degree of separation is not feasible, the second decisionmaker should at least be "bubbled" with respect to the original decision (i.e., not have participated in the original decision or discussed it with the original decisionmaker). In addition, there must be an opportunity to be heard in person as well as the chance to present written evidence and arguments. All appeals decisions must be in writing, stating the reasons for the decision.

To prevent the filing of stale claims, the entity may establish a 60 day "statute of limitations" on filing of appeals, the time starting to run on the date the individual is notified on the negative initial decision. After the appeals process has been completed (i.e., the hearing and/or written submission completed), the entity should make a decision within 30 days. If it does not, the individual must be provided service beginning the 31st day, until and unless an adverse decision is rendered on his or her appeal.

Under the eligibility criteria of the rule, an individual has a right to paratransit if he or she meets the eligibility criteria. As noted in the discussion of the nondiscrimination section, an entity may refuse service to individual with a disability who engages in violent, seriously disruptive, or illegal conduct, using the same standards for exclusion that would apply to any other person who acted in such an inappropriate way.

The rule also allows an entity to establish a process to suspend, for a reasonable period of time, the provision of paratransit service to an ADA eligible person who establishes a pattern or practice of missing scheduled trips. The purpose of this process would be to deter or deal with chronic "no-shows." The sanction system—articulated criteria for the imposition of sanctions, length of suspension periods, details of the administrative process, etc.—would be developed through the public planning and participation process for the entity's paratransit plan, and the result reflected in the plan submission to UMTA.

It is very important to note that sanctions could be imposed only for a "pattern or practice" of missed trips. A pattern or practice involves intentional, repeated or regular actions, not isolated, accidental, or singular incidents. Moreover, only actions within the control of the individual count as part of a pattern or practice. Missed trips due to operator error are not attributable to the individual passenger for this purpose. If the vehicle arrives substantially after the scheduled pickup time, and the passenger has given up on the vehicle and taken a taxi or gone down the street to talk to a neighbor, that is not a missed trip attributable to the passenger. If the vehicle does not arrive at all, or is sent to the wrong address, or to the wrong entrance to a building, that is not a missed trip attributable to the passenger. There may be other circumstances beyond the individual's control (e.g., a sudden turn for the worse in someone with a variable condition, a sudden family emergency) that make it impracticable for the individual to travel at the scheduled time and also for the individual to notify the entity in time to cancel the trip before the vehicle comes. Such circumstances also would not form part of a sanctionable pattern or practice.

Once an entity has certified someone as eligible, the individual's eligibility takes on the coloration of a property right. (This is not merely a theoretical statement. If one depends on transportation one has been found eligible for to get to a job, and the eligibility is removed, one may lose the job. The same can be said for access to medical care or other important services.) Consequently, before eligibility may be removed "for cause" under this provision, the entity must provide administrative due process to the individual.

If the entity proposes to impose sanctions on someone, it must first notify the individual in writing (using accessible formats where necessary). The notice must specify the basis of the proposed action (e.g., Mr. Smith scheduled trips for 8 a.m. on May 15, 2 p.m. on June 3, 9 a.m. on June 21, and 9:20 p.m. on July 10, and on each occasion the vehicle appeared at the scheduled time and Mr. Smith was nowhere to be found) and set forth the proposed sanction (e.g., Mr. Smith would not receive service for 15 days).

The entity would provide the individual an opportunity to be heard (i.e., an in-person informal hearing before a decisionmaker) as well as to present written and oral information and arguments. All relevant entity records and personnel would be made available to the individual, and other persons could testify. It is likely that, in many cases, an important factual issue would be whether a missed trip was the responsibility of the provider or the passenger, and the testimony of other persons and the provider's records or personnel are likely to be relevant in deciding this issue. While the hearing is intended to be informal, the individual could bring a representative (e.g., someone from an advocacy organization, an attorney).

The individual may waive the hearing and proceed on the basis of written presentations. If the individual does not respond to the notice within a reasonable time, the entity may make, in effect, a default finding and impose sanctions. If there is a hearing, and the individual needs paratransit service to attend the hearing, the entity must provide it. We would emphasize that, prior to a finding against the individual after this due process procedure, the individual must continue to receive service. The entity cannot suspend service while the matter is pending.

The entity must notify the individual in writing about the decision, the reasons for it, and the sanctions imposed, if any. Again, this information would be made available in accessible formats. In the case of a decision adverse to the individual, the administrative appeals process of this section would apply. The sanction would be stayed pending an appeal.

There are means other than sanctions, however, by which a transit provider can deal with a "no-show" problem in its system. Providers who use "real time scheduling" report that this technique is very effective in

reducing no-shows and cancellations, and increasing the mix of real time scheduling in a system can probably be of benefit in this area. Calling the customer to reconfirm a reasonable time before pickup can head off some problems, as can educating consumers to call with cancellations ahead of time. Training of dispatch and operator personnel can help to avoid miscommunications that lead to missed trips.

Section 37.127 Complementary Paratransit for Visitors

This section requires each entity having a complementary paratransit system to provide service to visitors from out of town on the same basis as it is provided to local residents. By "on the same basis," we mean under all the same conditions, service criteria, etc., without distinction. For the period of a visit, the visitor is treated exactly like an eligible local user, without any higher priority being given to either.

A visitor is defined as someone who does not reside in the jurisdiction or jurisdictions served by the public entity or other public entities with which it coordinates paratransit service. For example, suppose a five-county metropolitan area provides coordinated paratransit service under a joint plan. A resident of any of the five counties would not be regarded as a visitor in any of them. Note that the rule talks in terms of "jurisdiction" rather than "service area." If an individual lives in XYZ County, but outside the fixed route service area of that county's transit provider, the individual is still not a visitor for purposes of paratransit in PQR County, if PQR is one of the counties with which XYZ provides coordinated paratransit service.

A visitor can become eligible in one of two ways. The first is to present documentation from his or her "home" jurisdiction's paratransit system. The local provider will give "full faith and credit" to the ID card or other documentation from the other entity. If the individual has no such documentation, the local provider may require the provision of proof of visitor status (i.e., proof of residence somewhere else) and, if the individual's disability is not apparent, proof of the disability (e.g., a letter from a doctor or rehabilitation professional). Once this documentation is presented and is satisfactory, the local provider will make service available on the basis of the individual's statement that he or she is unable to use the fixed route transit system.

The local provider need serve someone based on visitor eligibility for no more than 21 days. After that, the individual is treated the same as a local person for eligibility purposes. This is true whether the 21 days are consecutive or parceled out over several shorter visits. The local provider may require the erstwhile visitor to apply for eligibility in the usual local manner. A visitor who expects to be around longer than 21 days should apply for regular eligibility as soon as he arrives. The same approach may be used for a service of requested visits totaling 21 days or more in a relating compact period of time. Preferably, this application process should be arranged before the visitor arrives, by letter, telephone or fax, so that a complete application can be processed expeditiously.

Section 37.129 Types of Service

The basic mode of service for complementary paratransit is demand responsive, origin-to-destination service. This service may be provided for persons in any one of the three eligibility categories, and must always be provided to persons in the first category (e.g., people who cannot navigate the system). The local planning process should decide whether, or in what circumstances, this service is to be provided as door-to-door or curb-to-curb service.

For persons in the second eligibility category (e.g., persons who can use accessible buses, but do not have an accessible bus route available to take them to their destination), origin-to-destination service can be used. Alternatively, the entity can provide either of two other forms of service. One is on-call bus, in which the individual calls the provider and arranges for one or more accessible buses to arrive on the routes he needs to use at the appropriate time. On-call bus service must meet all the service criteria of § 37.131, except that on-call buses run only on fixed routes and the fare charged can be only the fixed route fare that anyone pays on the bus (including discounts).

The second option is "feeder paratransit" to an accessible fixed route that will take the individual to his or her destination. Feeder paratransit, again, would have to meet all the criteria of § 37.131. With respect to fares, the paratransit fare could be charged, but the individual would not be double charged for the trip. That is, having paid the paratransit fare, the transfer to the fixed route would be free.

For persons in the third eligibility category (e.g., persons who can use fixed route transit but who, because of a specific impairment-related condition, cannot get to or from a stop), the "feeder paratransit" option, under the conditions outlined above, is available. For some trips, it might be necessary to arrange for feeder service at both ends of the fixed route trip. Given the more complicated logistics of such arrangements, and the potential for a mistake that would seriously inconvenience the passenger, the transit provider should consider carefully whether such a "double feeder" system, while permissible, is truly workable in its system (as opposed to a simpler system that used feeder service only at one end of a trip when the bus let the person off at a place from which he or she could independently get to the destination). There may be some situations in which origin to destination service is easier and less expensive.

Section 37.131 Service Criteria for Complementary Paratransit Service Area

The basic bus system service area is a corridor with a width of ¾ of a mile on each side of each fixed route. At the end of a route, there is a semicircular "cap" on the corridor, consisting of a three-quarter mile radius from the end point of the route to the parallel sides of the corridor.

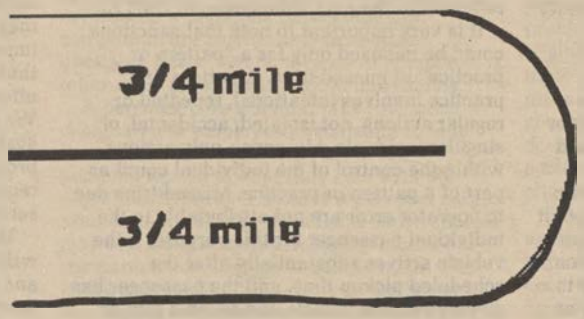

Complementary paratransit must provide service to any origin or destination point within a corridor fitting this description around any route in the bus system. Note that this does not say that an eligible user must live within a corridor in order to be eligible. If an individual lives outside the corridor, and can find a way of getting to a pickup point within the corridor, the service must pick him up there. The same holds true at the destination end of the trip.

Another concept involved in this service criterion is the core service area. Imagine a bus route map of a typical city. Color the bus routes and their corridors blue, against the white outline map. In the densely populated areas of the city, the routes (which, with their corridors attached, cut 1½ mile swaths) merge together into a solid blue mass. There are few, if any, white spots left uncovered, and they are likely to be very small.

Paratransit would serve all origins and destinations in the solid blue mass.

But what of the little white spots surrounded by various bus corridors? Because it would make sense to avoid providing service to such small isolated areas, the rule requires paratransit service there as well. So color them in too.

Outside the core area, though, as bus routes follow radial arteries into the suburbs and exurbs (we know real bus route maps are more complicated than this, but we simplify for purposes of illustration), there are increasingly wide white areas between the blue corridors, which may have corridors on either side of them but are not small areas completely surrounded by corridors. These white spaces are not part of the paratransit service area and the entity does not have to serve origins and destinations there. However, if, through the planning process, the entity wants to enlarge the width of one or more of the blue corridors from the ¾ of a mile width, it can do so, to a maximum of 1½ miles on each side of a route. The cost of service provided within such an expanded corridor can be counted in connection with an undue financial burden waiver request.

There may be a part of the service area where part of one of the corridors overlaps a political boundary, resulting in a requirement to serve origins and destinations in a neighboring jurisdiction which the entity lacks legal authority to service. The entity is not required to serve such origins and destinations, even though the area on the other side of the political boundary is within a corridor. This exception to the service area criterion does not automatically apply whenever there is a political boundary, only when there is a legal bar to the entity providing service on the other side of the boundary.

The rule requires, in this situation, that the entity take all practicable steps to get around the problem so that it can provide service throughout its service area. The entity should work with the state or local governments involved, via coordination plans, reciprocity agreements, memoranda or understanding or other means to prevent political boundaries from becoming barriers to the travel of individuals with disabilities.

The definition of the service area for rail systems is somewhat different, though many of the same concepts apply.

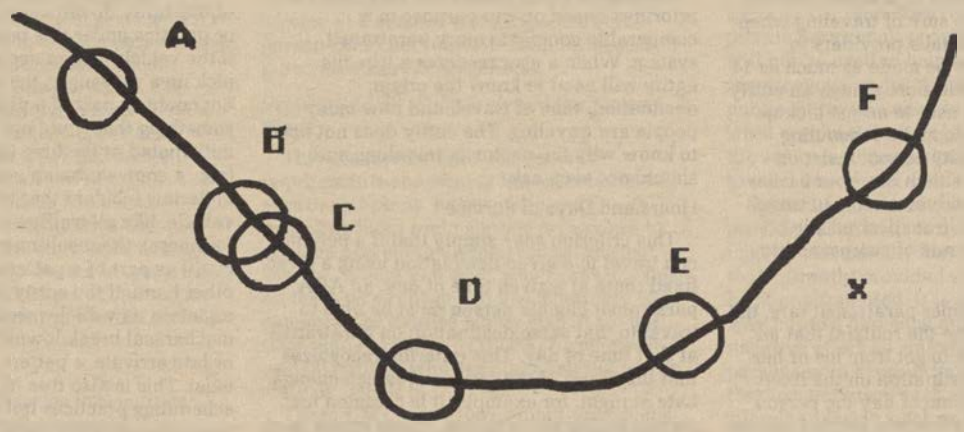

Circle radius = 3/4 mile

Around each station on the line (whether or not a key station), the entity would draw a circle with a radius of ¾ mile. Some circles may touch or overlap. The series of circles is the rail system's service area. (We recognize that, in systems where stations are close together, this could result in a service area that approached being a corridor like that of a bus line.) The rail system would provide paratransit service from any point in one circle to any point in any other circle. The entity would not have to provide service to two points within the same circle, since a trip between two points in the vicinity of the same station is not a trip that typically would be taken by train. Nor would the entity have to provide service to spaces between the circles. For example, a train trip would not get close to point x; one would have to take a bus or other mode of transportation to get from station E or F to point x. A paratransit system comparable to the rail service area would not be required to take someone there either.

Rail systems typically provide trips that are not made, or cannot be made conveniently, on bus systems. For example, many rail systems cross jurisdictional boundaries that bus systems often do not. One can travel from Station A to a relatively distant Station E on a rail system in a single trip, while a bus trip between the same points, if possible at all, may involve a number of indirect routings and transfers, on two bus systems that may not interface especially well.

Rail operators have an obligation to provide paratransit equivalents of trips between circles to persons who cannot use fixed route rail systems because they cannot navigate the system, because key stations or trains are not yet accessible, or because they cannot access stations from points within the circles because of a specific impairment-related condition. For individuals who are eligible in category 2 because they need an accessible key station to use the system, the paratransit obligation extends only to transportation among "circles" centered on designated key stations (since, even when the key station plan is fully implemented, these individuals will be unable to use non-key stations).

It is not sufficient for a rail operator to refer persons with disabilities to an accessible bus system in the area. The obligation to provide paratransit for a rail system is independent of the operations of any bus system serving the same area, whether operated by the same entity that operates the rail system or a different entity. Obviously, it will be advantageous for bus and rail systems to coordinate their paratransit efforts, but a coordinated system would have to ensure coverage of trips comparable to rail trips that could not conveniently be taken on the fixed route bus system.

Response Time

Under this provision, an entity must make its reservation service available during the hours its administrative offices are open. If those offices are open 9 to 5, those are the hours during which the reservations service must be open, even if the entity's transit service operated 6 a.m. to midnight. On days prior to a service day on which the administrative offices are not open at all (e.g., a Sunday prior to a Monday service day), the reservation service would also be open 9 to 5. Note that the reservation service on any day does not have to be provided directly by a "real person." An answering machine or other technology can suffice.

Any caller reaching the reservation service during the 9 to 5 period, in this example,

could reserve service for any time during the next 6 a.m. to 12 midnight service day. This is the difference between "next day scheduling" and a system involving a 24-hour prior reservation requirement, in which a caller would have to reserve a trip at 7 a.m. today if he or she wanted to travel at 7 a.m. tomorrow. The latter approach is not adequate under this rule.

The entity may use real time scheduling for all or part of its service. Like the Moliere character who spoke prose all his life without knowing it, many entities may already be using some real time scheduling (e.g., for return trips which are scheduled on a when-needed basis, as opposed to in advance). A number of transit providers who have used real time scheduling believe that it is more efficient on a per-trip basis and reduces cancellations and no-shows significantly. We encourage entities to consider this form of service.

Sometimes users want to schedule service well in advance, to be sure of traveling when they want to. The rule tells providers to permit reservations to be made as much as 14 days in advance. In addition, though an entity may negotiate with a user to adjust pickup and return trip times to make scheduling more efficient, the entity cannot insist on scheduling a trip more than one hour earlier or later than the individual desires to travel. Any greater deviation from desired trip would exceed the bounds of comparability.

Fares

To calculate the proper paratransit fare, the entity would determine the route(s) that an individual would take to get from his or her origin to his or her destination on the fixed route system. At the time of day the person was traveling, what is the fare for that trip on those routes? Applicable charges like transfer fees or premium service charges may be added to the amount, but discounts (e.g., the half-fare discount for off-peak fixed route travel by elderly and handicapped persons) would not be subtracted. The transit provider could charge up to twice the resulting amount for the paratransit trip.

The mode through which paratransit is provided does not change the method of calculation. For example, if paratransit is provided via user side subsidy taxi service rather than publicly operated dial-a-ride van service, the cost to the user could still be only twice the applicable fixed route fare. The system operates the same regardless of whether the paratransit trip is being provided in place of a bus or a rail trip the user cannot make on the fixed route system. Where bus and rail systems are run by the same provider (or where the same bus provider runs parallel local and express buses along the same route), the comparison would be made to the mode on which a typical fixed route user would make the particular trip, based on schedule, length, convenience, avoidance of transfers, etc.

Companions are charged the same fare as the eligible individual they are accompanying. Personal care attendants ride free.

One exception to the fare requirement is made for social service agency (or other organization-sponsored) trips. This exception, which allows the transit provider to negotiate a price with the agency that is more than twice the relevant fixed route fare, applies to "agency trips," by which we mean trips which are guaranteed to the agency for its use. That is, if an agency wants 12 slots for a trip to the mall on Saturday for clients with disabilities, the agency makes the reservation for the trips in its name, the agency will be paying for the transportation, and the trips are reserved to the agency, for whichever 12 people the agency designates, the provider may then negotiate any price it can with the agency for the trips. We distinguish this situation from one in which an agency employee, as a service, calls and makes an individual reservation in the name of a client, where the client will be paying for the transportation.

Restrictions and Priorities Based on Trip Purpose

This is a simple and straightforward requirement. There can be no restrictions or priorities based on trip purpose in a comparable complementary paratransit system. When a user reserves a trip, the entity will need to know the origin, destination, time of travel, and how many people are traveling. The entity does not need to know why the person is traveling, and should not even ask.

Hours and Days of Service

This criterion says simply that if a person can travel to a given destination using a given fixed route at a given time of day, an ADA paratransit eligible person must be able to travel to that same destination on paratransit at that time of day. This criterion recognizes that the shape of the service area can change. Late at night, for example, it is common for certain routes not to be run. Those routes, and their paratransit corridors, do not need to be served with paratransit when the fixed route system is not running on them. One couldn't get to destinations in that corridor by fixed route at those times, so paratransit service is not necessary either.

It should be pointed out that service during low-demand times need not be by the same paratransit mode as during higher usage periods. For example, if a provider uses its own paratransit vans during high demand periods, it could use a private contractor or user-side subsidy provider during low demand periods. This would presumably be a more efficient way of providing late night service. A call-forwarding device for communication with the auxiliary carrier during these low demand times would be perfectly acceptable, and could reduce administrative costs.

Capacity Constraints

This provision specifically prohibits two common mechanisms that limit use of a paratransit system so as to constrain demand on its capacity. The first is a waiting list. Tyically, a waiting list involves a determination by a provider that it can provide service only to a given number of eligible persons. Other eligible persons are not able to receive service until one of the people being served moves away or otherwise no longer uses the service. Then the persons on the waiting list can move up. The process is analogous to the wait that persons in some cities have to endure to be able to buy season tickets to a sold-out slate of professional football games.

The second mechanism specifically mentioned is a number limit on the trips a passenger can take in a given period of time. It is a kind of rationing in which, for example, if one has taken his quota of 30 trips this month, he cannot take further trips for the rest of the month.

In addition, this paragraph prohibits any operational pattern or practice that significantly limits the availability of service of ADA paratransit eligible persons. As discussed under § 37.125 in the context of missed trips by passengers, a "pattern or practice" involves, regular, or repeated actions, not isolated, accidental, or singular incidents. A missed trip, late arrival, or trip denial now and then does not trigger this provision.

Operational problems outside the control of the entity do not count as part of a pattern or practice under this provision. For example, if the vehicle has an accident on the way to pick up a passenger, the late arrival would not count as part of a pattern or practice. If something that could not have been anticipated at the time the trip was scheduled (e.g., a snowstorm, an accident or hazardous materials incident that traps the paratransit vehicle, like all traffic on a certain highway, for hours), the resulting missed trip would not count as part of a pattern or practice. On the other hand, if the entity regularly does not maintain its vehicles well, such that frequent mechanical breakdowns result in missed trips or late arrivals, a pattern or practice may exist. This is also true in a situation in which scheduling practices fail to take into account regularly occurring traffic conditions (e.g., rush hour traffic jams), resulting in frequent late arrivals.

The rule mentions three specific examples of operational patterns or practices that would violate this provision. The first is a pattern or practice of substantial numbers of significantly untimely pickups (either for initial or return trips). To violate this provision, there must be both a substantial number of late arrivals and the late arrivals in question must be significant in length. For example, a DOT Inspector General's (IG) report on one city's paratransit system disclosed that around 30 percent of trips were between one and five hours late. Such a situation would trigger this provision. On the other hand, only a few instances of trips one to five hours late, or many instances of trips a few minutes late, would not trigger this provision.

The second example is substantial numbers of trip denials or missed trips. For example, if on a regular basis the reservation phone lines open at 5 a.m. and callers after 7 a.m. are all told that they cannot travel, or the phone lines shut down after 7 a.m. and a recorded message says to call back the next day, or the phone lines are always so busy that no one can get through, this provision would be triggered. (Practices of this kind would probably violate the response time criterion as well.) Also, if, on a regular basis, the entity misses a substantial number of trips (e.g., a trip is scheduled, the passenger is

waiting, but the vehicle never comes, goes to the wrong address, is extremely late, etc.), it would violate this provision.

The third example is substantial numbers of trips with excessive trip lengths. Since paratransit is a shared ride service, paratransit rides between Point A and Point B will usually take longer, and involve more intermediate stops, than a taxi ride between the same two points. However, when the number of intermediate stops and the total trip time for a given passenger grows so large as to make use of the system prohibitively inconvenient, then this provision would be triggered. For example, the IG report referred to above mentioned a situation in which 9 percent of riders had one way trips averaging between two and four hours, with an average of 16 intermediate stops. Such a situation would probably trigger this provision.

Though these three examples probably cover the most frequently cited problems in paratransit operations that directly or indirectly limit the provision of service that is theoretically available to eligible persons, the list is not exhaustive. Other patterns or practices could trigger this provision. For example, the Department has heard about a situation in which an entity's paratransit contractor was paid on a per-trip basis, regardless of the length of the trip. The contractor therefore had an economic incentive to provide as many trips as possible. As a result, the contractor accepted short trips and routinely denied longer trips. This would be a pattern or practice contrary to this provision (and contrary to the service area provision as well).

Additional Service

This provision emphasizes that entities may go beyond the requirements of this section in providing service to ADA paratransit individuals. For example, no one is precluded from offering service in a larger service area, during greater hours than the fixed route system, or without charge. However, costs of such additional service do not count with respect to undue financial burden waiver requests. Where a service criterion itself incorporates a range of actions the entity may take (e.g., providing wide corridors outside the urban core, using real time scheduling), however, costs of providing that optional service may be counted for undue financial burden waiver request purposes.

Section 37.133 Subscription Service

As part of its paratransit service, an entity may include a subscription service component. However, at any given time of day, this component may not absorb more than 50 percent of available capacity on the total system. For example, if, at 8 a.m., the system can provide 400 trips, no more than 200 of these can be subscription trips.

The one exception to this rule would occur in a situation in which there is excess non-subscription capacity available. For example, if over a long enough period of time to establish a pattern, there were only 150 non-subscription trips requested at 8 a.m., the provider could begin to provide 250 subscription trips at that time. Subsequently, if non-subscription demand increased over a period of time, such that the 50 trips were needed to satisfy a regular non-subscription demand at that time, and overall system capacity had not increased, the 50 trips would have to be returned to the non-subscription category. During times of high subscription demand, entities could use the trip time negotiation discretion of § 37.131(c)(2) to shift some trips to other times.

Because subscription service is a limited subcomponent of paratransit service, the rule permits restrictions to be imposed on its use that could not be imposed elsewhere. There may be a waiting list for provision of subscription service or the use of other capacity constraints. Also, there may be restrictions or priorities based on trip purpose. For example, subscription service under peak work trip times could be limited to work trips. We emphasize that these limitations apply only to subscription service. It is acceptable for a provider to put a person on a waiting list for access to subscription service at 8 a.m. for work trips; the same person could not be wait-listed for access to paratransit service in general.

Section 37.135 Submission of Paratransit Plans

This section contains the general requirements concerning the submission of paratransit plans. Each public entity operating fixed route service is required to develop and submit a plan for paratransit service. Where you send your plans depends on the type of entity you are. There are two categories of entities which should submit their plans to states—(1) UMTA recipients and (2) entities who are administered by the state on behalf of UMTA.

These UMTA grantees submit their plans to the states because the agency would like the benefit of the states' expertise before final review. The states' role is as a commenter, not as a reviewer.

This section also specifies annual progress reports concerning the meeting of previously approved milestones, any slippage (with the reasons for it and plans to catch up), and any significant changes in the operator's environment, such as the withdrawal from the marketplace of a private paratransit provider or whose service the entity has relied upon to provide part of its paratransit service.

Paragraph (d) of this section specifies a maximum time period for the phase-in of the implementation of paratransit plans. The Department recognizes that it is not reasonable to expect paratransit systems to spring into existence fully formed, like Athena from the head of Zeus. Under this paragraph, all entities must be in full compliance with all paratransit provisions by January 26, 1997, unless the entity has received a waiver from UMTA based on undue financial burden (which applies only to the service criteria of § 37.131, not to eligibility requirements or other paratransit provisions).

While the rule assumes that most entities will take a year to fully implement these provisions, longer than a year requires the paratransit plans to submit milestones that are susceptible to objective verification. Not all plans will be approved with a five-year lead-in period. Consistent with the proposed rule, the Department intends to look at each plan individually to see what is required for implementation in each case. DOT may approve only a shorter phase-in period in a given case.

Section 37.137 Paratransit Plan Development

Section 35.137 establishes three principal requirements in the development of paratransit plans.

First is the requirement to survey existing paratransit services within the service area. This is required by section 223(c)(8) of the ADA. While the ADA falls short of explicitly requiring coordination, clearly this is one of the goals. The purpose of the survey is to determine what is being provided already, so that a transit provider can accurately assess what additional service is needed to meet the service criteria for comparable paratransit service. The plan does not have to discuss private paratransit providers whose services will not be used to help meet paratransit requirements under this rule. However, the public entity will need to know specifically what services are being provided by whom if the entity is to count the transportation toward the overall need.

Since the public entity is required to provide paratransit to all ADA paratransit eligible individuals, there is some concern that currently provided service may be cut back or eliminated. It is possible that this may happen and such action would have a negative effect on transportation provided to persons with disabilities in general. The Department urges each entity required to submit a plan to work with current providers of transportation, not only to determine what transportation services they provide, but also to continue to provide service into the foreseeable future.

Second, § 37.137 specifies requirements for public participation. First, the entity must perform outreach, to ensure that a wide range of persons anticipated to use the paratransit service know about and have the opportunity to participate in the development of the plan. Not only must the entity identify who these individuals or groups are, the entity also must contact the people at an early stage in the development process.

The other public participation requirements are straightforward. There must be a public hearing and an opportunity to comment. The hearing must be accessible to those with disabilities, and notice of the hearing must be accessible as well. There is a special efforts test identified in this paragraph for comments concerning a multi-year phase-in of a paratransit plan.

The final general requirement of the section specifies that efforts at public participation must be made permanent through some mechanism that provides for participation in all phases of paratransit plan development and submission. The Department is not requiring that there be an advisory committee established, although this is one method of institutionalizing participation. The Department is not as interested in the specific structure used to ensure public participation

as we are interested in the effectiveness of the effort.

The Department believes that public participation is a key element in the effective implementation of the ADA. The ADA is an opportunity to develop programs that will ensure the integration of all persons into not just the transportation system of America, but all of the opportunities transportation makes possible. This opportunity is not without tremendous challenges to the transit providers. It is only through dialogue, over the long term, that usable, possible plans can be developed and implemented.

Section 37.139 Plan Contents

This section contains substantive categories of information to be contained in the paratransit plan: Information on current and changing fixed route service; inventory of existing paratransit service; discussion of the discrepancies between existing paratransit and what is required under this regulation; a discussion of the public participation requirements and how they have been met; the plan for paratransit service; the budget for paratransit services; efforts to coordinate with other transportation providers; a description of the process in place or to be used to register ADA paratransit eligible individuals; a description of the documentation provided to each individual verifying eligibility; and a request for a waiver based on undue financial burden, if applicable. The final rule contains a reorganized and slightly expanded section on plan contents, reflecting requests to be more explicit, rather than less explicit.

The list of required elements is the same for all entities required to submit paratransit plans. There is no document length requirement, however. Each entity (or group plan) is unique and we expect the plans to reflect this. While we would like the plan elements presented in the order listed in this section, the contents most likely will vary greatly, depending on the size, geographic area, budget, complexity of issues, etc. of the particular submitting agency.

This section and § 37.139 provide for a maximum phase-in period of five years, with an assumed one-year phase-in for all paratransit programs. (The required budget has been changed to five years as well.) The Department has established a maximum five-year phase-in in the belief that not all systems will require that long, but that some, particularly those which had chosen to meet compliance with section 504 requirements with accessible fixed route service, may indeed need five years.

We are confident that, through the public participation process, entities can develop a realistic plan for full compliance with the ADA. To help ensure this, the paratransit plan contents section now requires that any plan which projects full compliance after January 26, 1993 must include milestones which can be measured and which result in steady progress toward full compliance. For example, it is possible that the first part of year one is used to ensure comprehensive registration of all eligible persons with disabilities, training of transit provider staffs and the development and dissemination of information to users and potential users in accessible formats and some modest increase in paratransit service is provided. A plan would not be permitted to indicate that no activity was possible in the first year, but proportionately more progress could be planned for later years than for the first year. Implementation must begin in January 1992.

Each plan, including its proposed phase-in period, will be the subject of examination by UMTA. Not all providers who request a five-year phase-in will receive approval for a five-year phase-in. The plan must be careful, therefore, to explain what current services are, what the projections are, and what methods are in place to determine and provide accountability for progress toward full compliance.

We have been asked for assistance in assessing what the demand for paratransit service will be. UMTA's ADA Paratransit Manual provides detailed assistance in this and many other areas of the plan development process.

The ADA itself contained a figure of 43 million persons with disabilities. It should be pointed out that many of these may not necessarily be eligible for ADA paratransit service. The Department's regulatory impact analysis discussing the probable costs involved in implementing this rule places the possible percentage of population who would be eligible for paratransit service at between 1.4 and 1.9 percent. This figure can vary depending on the type and variety of services you have available, or on such things as climate, proximity to medical care, family, etc. that a person with a disability may need. Clearly estimating demand is one of the most critical elements in the plan, since it will be used to make decisions about all of the various service criteria.

Section 37.139 contains a new paragraph (j), spelling out in more detail requirements related to the annual submission of plans. Since there is now the possibility for five-year phase-ins, the annual plan demonstrates the progress made to date, and explains any delays.

Section 37.141 Requirements If a Joint Plan is Submitted

The Department believes that, particularly in large, multi-provider regions, a coordinated regional paratransit plan and system are extremely important. Such coordination can do much to ensure that the most comprehensive transportation can be provided with the most efficient use of available resources. We recognize that the effort of putting together such a coordinated system can be a lengthy one. This section is intended to facilitate the process of forming such a coordinated system.

If a number of entities wish to submit a joint plan for a coordinated system, they must, like other entities, submit a document by January 26, 1992. At a minimum, this document must include the following:

(1) A general statement that the participating entities intend to file a joint coordinated plan;

(2) A certification from each participating entity that it is committed to providing paratransit as a part of a coordinated plan;

(3) A certification from each participating entity that it will maintain at least current levels of paratransit service until the coordinated paratransit service called for by the joint plan is implemented;

(4) As many elements of the plan as possible.

These provisions ensure that significant planning will precede, and plan implementation will begin by, January 26, 1992, without precluding entities from cooperating because it was not possible to complete coordinating different public entities by that date. The entities involved in a joint plan are required to submit all elements of their plan by July 26, 1992.

The final provision in the section notes that an entity may later join a coordinated plan, even if it has filed its own plan on January 26, 1992. An entity must submit its own plan by January 26, 1992, if it has not provided a certification of participation in a joint plan.). In this case, the entity must provide the assurances and certifications required of all of the other participating entities.

The Department fully expects that many jurisdictions filing joint plans will be able to do so by January 26, 1992. For those who cannot, the regulatory provision ensures that there will be no decrease in paratransit service. Further, since we anticipate coordinated service areas to provide more effective service, complete implementation of a joint plan could be more rapid than if each entity was providing service on its own.

Entities submitting a joint plan do not have any longer than any other entities to fully implement complementary paratransit service. In any case, all plans (joint or single) must be fully implemented by January 26, 1997, absent a waiver for undue financial burden (which would, in the case of a joint plan, be considered on a joint basis).

Section 37.143 Paratransit Plan Implementation

As already discussed under § 37.135, the states will receive UMTA recipient plans for section 18 recipients administered by the State or any small urbanized area recipient of section 9 funds administered by a state. Public entities who do not receive UMTA funds will submit their plans directly to the applicable Regional Office (listed in appendix B to the rule).

The role of the state is to accept the plans on behalf of UMTA, to ensure that all plans are submitted to it and forward the plans, with any comments on the plans, to UMTA. This comment is very important for UMTA to receive, since states administer these programs on behalf of UMTA. Each state's specific knowledge of UMTA grantees it administers will provide helpful information to UMTA in making its decisions.

The rule lists five questions the states must answer when they forward the plans. These questions are gauged to capitalize on the working knowledge the states possess on the grantees. UMTA will send a more specific letter of instruction to each state explaining its role.

Section 37.147 UMTA Review of Plans

This provision spells out factors UMTA will consider in reviewing each plan, including whether the submission is complete, whether the plan complies with the

substance of the ADA regulation, whether the entity complied with the public participation requirements in developing the plan, efforts by the entity to coordinate with other entities in a plan submission, and any comments submitted by the states.

These elements are not the only items that will be reviewed by UMTA. Every portion of the plan will be reviewed and assessed for compliance with the regulation. This section merely highlights those provisions thought most important by the Department.

Section 37.151 Waiver for Undue Financial Burden

The Department has adopted a five-year phase-in for paratransit service. Under this scheme, each entity required to provide paratransit service will be able to design a phase-in of its service specifically geared to local circumstances. While all jurisdictions will not receive approval for plans with a five year phase-in, each entity will be able to request what it needs based on local circumstances. Generally, the section allows an entity to request a wavier at any time it determines that it will not be able to meet a five-year phase-in or make measured progress toward its full compliance date specified in its original plan.

A waiver for undue financial burden should be requested if one of the following circumstances applies. First, when the entity submits its first plan on January 26, 1992, if the entity knows it will not be able to reach full compliance within five years, or if the entity cannot make measured progress the first year it may submit a waiver request. The entity also should apply for a waiver, if, during plan implementation, there are changed circumstances which make it unlikely that compliance will be possible.

The concept of measured progress should be given its plain meaning. It is not acceptable to submit a plan which shows significant progress in implementing a plan in years four and five, but no progress in years one and two. Similarly, the progress must be susceptible to objective verification. An entity cannot merely "work toward" developing a particular aspect of a plan.

The Department intends that undue burden waiver requests will be given close scrutiny, and waiver will not be granted highly. In reviewing requests, however, as the legislative history indicates, UMTA will look at the individual financial constraints within which each public entity operates its fixed route system. "Any determination of undue financial burden cannot have assumed the collection of additional revenues, such as those received through increases in local taxes or legislative appropriations, which would not have otherwise been made available to the fixed route operator." (H. Rept. 101–485, Pt. 1, at 31)

Section 37.153 UMTA Waiver Determination

If the UMTA Administrator grants a waiver for undue financial burden, the waiver will be for a specified period of time and the Administrator will determine what the entity must do to meet its responsibilities under the ADA. Each determination will involve a judgment of what is appropriate on a case-by-case basis. Since each waiver will be granted based on individual circumstances, the Department does not deem it appropriate to specify a generally applicable duration for a waiver.

When a waiver is granted, the rule calls for entities to look first at limiting the number of trips provided to each individual as a means of providing service that does not create an undue burden. This capacity constraint, unlike manipulations of other service criteria, will not result in a degradation of the quality of service. An entity intending to submit an undue burden waiver request should take this approach into account in its planning process.

It should be noted that requiring an entity to provide paratransit service at least during core hours along key routes is one option that the Administrator has available in making a decision about the service to be provided. This requirement stems from the statutory provision that the Administrator can require the entity to provide a minimum level of service, even if to do so would be an undue financial burden. Certainly part of a request for a waiver could be a locally endorsed alternative to this description of basic service. The rule states explicitly the Administrator's discretion to return the application for more information if necessary.

Section 37.155 Factors in Decision to Grant an Undue Financial Burden Waiver

Factors the Administrator will consider in making a decision whether to grant an undue financial burden waiver request include effects on current fixed route service, reductions in other services, increases in fares, resources available to implement complementary paratransit over the period of the plan, current level of accessible service (fixed route and paratransit), cooperation among transit providers, evidence of increased efficiencies that have been or could be used, any unique circumstances that may affect the entity's ability to provide paratransit service, the level of per capita service being provided, both to the population as a whole and what is being or anticipated to be provided to persons who are eligible and registered to receive ADA paratransit service.

This final element allows some measure of comparability, regardless of the specific service criteria and should assist in a general assessment of level of effort.

It is only the costs associated with providing paratransit service to ADA-paratransit eligible persons that can be counted in assessing whether or not there is an undue financial burden. Two cost factors are included in the considerations which enhance the Administrator's ability to assess real commitment to these paratransit provisions.

First, the Department will allow a statistically valid methodology for estimating number of trips mandated by the ADA. While the regulation calls for a trip-by-trip determination of eligibility, this provision recognizes that this is not possible for some systems, particularly the large systems. Since only those trips provided to a person when he or she is ADA eligible may be counted in determining an undue financial burden, this provision is necessary.

Second, in determining costs to be counted toward providing paratransit service, paragraph (b)(3) allows an entity to include in its paratransit budget dollars to which it is legally entitled, but which, as a matter of state or local funding arrangements, are provided to another entity that is actually providing the paratransit service.

For example, a state government may provide a certain formula allocation of the revenue from a certain tax to each jurisdiction for use in providing transportation service at the local level. The funds, depending on local arrangements, may flow either to a transit authority—a regulated entity under this rule—or to a city or county government. If the funds go to the transit authority, they clearly may be counted in an undue burden calculation. In addition, however, this provision also allows funds that flow through the city or county government to be counted in the undue burden calculation, since they are basically the same funds and should not be treated differently based on the accident of previously-determined local arrangements. On the other hand, this provision does not allow funds of a private non-profit or other organization who uses Department of Health and Human Services grant or private contributions to be counted toward the entity's financial commitment to paratransit.

Subpart G—Provision of Service

Section 37.161 Maintenance of Accessible Features—General

This section applies to all entities providing transportation services, public and private. It requires those entities to maintain in operative condition those features or facilities and equipment that make facilities and vehicles accessible to and usable by individuals with disabilities.

The ADA requires that, to the maximum extent feasible, facilities be accessible to and usable by individuals with disabilities. This section recognizes that it is not sufficient to provide features such as lift-equipped vehicles, elevators, communications systems to provide information to people with vision or hearing impairments, etc. if these features are not maintained in a manner that enables individuals with disabilities to use them. Inoperative lifts or elevators, locked accessible doors, accessible paths of travel that are blocked by equipment or boxes of materials are not accessible to or usable by individuals with disabilities.

The rule points out that temporary obstructions or isolated instances of mechanical failure would not be considered violations of the ADA or this rule. Repairs must be made "promptly." The rule does not, and probably could not, state a time limit for making particular repairs, given the variety of circumstances involved. However, repairing accessible features must be made a high priority. Allowing obstructions or out of order accessibility equipment to persist beyond a reasonable period of time would violate this Part, as would mechanical failures due to improper or inadequate maintenance. Failure of the entity to ensure that accessible routes are free of obstruction and properly maintained, or failure to arrange prompt

repair of inoperative elevators, lifts, or other accessibility-related equipment, would also violate this part.

The rule also requires that accommodations be made to individuals with disabilities who would otherwise use an inoperative accessibility feature. For example, when a rail system discovers that an elevator is out of order, blocking access to one of its stations, it could accommodate users of the station by announcing the problem at other stations to alert passengers and offer accessible shuttle bus service around the temporarily inaccessible station. If a public address system were out of order, the entity could designate personnel to provide information to customers with visual impairments.

Section 37.163 Keeping Vehicle Lifts in Operative Condition—Public Entities

This section applies only to public entities. Of course, like vehicle acquisition requirements and other provisions applying to public entities, these requirements also apply when private entities "stand in the shoes" of public entities in contracting situations, as provided in § 37.23.

This section's first requirement is that the entity establish a system of regular and frequent maintenance checks of lifts sufficient to determine if they are operative.

Vehicle and equipment maintenance is an important component of successful accessible service. In particular, an aggressive preventive maintenance program for lifts is essential. Lifts remain rather delicate pieces of machinery, with many moving parts, which often must operate in a harsh environment of potholes, dust and gravel, variations in temperature, snow, slush, and deicing compounds. It is not surprising that they sometimes break down.

The point of a preventive maintenance program is to prevent breakdowns, of course. But it is also important to catch broken lifts as soon as possible, so that they can be repaired promptly. Especially in a bus system with relatively low lift usage, it is possible that a vehicle could go for a number of days without carrying a passenger who uses the lift. It is highly undesirable for the next passenger who needs a lift to be the person who discovers that the lift is broken, when a maintenance check by the operator could have discovered the problem days earlier, resulting in its repair.

Therefore, the entity must have a system for regular and frequent checks, sufficient to determine if lifts are actually operative. This is not a requirement for the lift daily. (Indeed, it is not, as such, a requirement for lift cycling at all. If there is another means available of checking the lift, it may be used.) If alternate day checks, for example, are sufficient to determine that lifts are actually working, then they are permitted. If a lift is used in service on a given day, that may be sufficient to determine that the lift is operative with respect to the next day. It would be a violation of this part, however, for the entity to neglect to check lifts regularly and frequently, or to exhibit a pattern of lift breakdowns in service resulting in stranded passengers when the lifts had not been checked before the vehicle failed to provide required accessibility to passengers that day.

When a lift breaks down in service, the driver must let the entity know about the problem by the most immediate means available. If the vehicle is equipped with a radio or telephone, the driver must call in the problem on the spot. If not, then the driver would have to make a phone call at the first opportunity (e.g., from a phone booth during the turnaround time at the end of the run). It is not sufficient to wait until the end of the day and report the problem when the vehicle returns to the barn.

When a lift is discovered to be inoperative, either because of an in-service failure or as the result of a maintenance check, the entity must take the vehicle out of service before the beginning of its next service day (with the exception discussed below) and repair the lift before the vehicle is put back into service. In the case of an in-service failure, this means that the vehicle can continue its runs on that day, but cannot start a new service day before the lift is repaired. If a maintenance check in the evening after completion of a day's run or in the morning before a day's runs discloses the problem, then the bus would not go into service until the repair had taken place.

The Department realizes that, in the years before bus fleets are completely accessible, taking buses with lifts out of service for repairs in this way would probably result in an inaccessible spare bus being used on the route, but at least attention would have to be paid quickly to the lift repair, resulting in a quicker return to service of a working accessible bus.

The rule provides an exception for those situations in which there is no spare vehicle (either accessible or inaccessible) available to take the place of the vehicle with an operative lift, such that putting the latter vehicle into the shop would result in a reduction of service to the public (e.g., a scheduled run on a route could not be made). The Department would emphasize that the exception does not apply when there is any spare vehicle available.

Where the exception does apply, the provider may keep the vehicle with the inoperative lift in service for a maximum of three days (for providers operating in an area of over 50,000 population) or five days (for providers operating in an area of 50,000 population or less). After these times have elapsed, the vehicle must go into the shop, not to return until the lift is repaired. Even during the three- or five-day period, if an accessible spare bus becomes available at any time, it must be used in place of the bus with the inoperative lift or an inaccessible spare that is being used in its place.

In a fixed route system, if a bus is operating without a working lift (either on the day when the lift fails in service or as the result of the exception discussed above) and headways between accessible buses on the route on which the vehicle is operating exceed 30 minutes, the entity must accommodate passengers who would otherwise be inconvenienced by the lack of an accessible bus. This accommodation would be by a paratransit or other special vehicle that would pick up passengers with disabilities who cannot use the regular bus because its lift is inoperative. Passengers who need lifts in this situation would, in effect, be ADA paratransit eligible under the second eligibility category. However, since they would have no way of knowing that the bus they sought to catch would not be accessible that day, the transit authority must actively provide alternative service to them. This could be done, for example, by having a "shadow" accessible service available along the route or having the bus driver call in the minute he saw an accessible passenger he could not pick up (including the original passenger stranded by an in-service lift failure), with a short (i.e., less than 30-minute) response from an accessible vehicle dispatched to pick up the stranded passenger. To minimize problems in providing such service, when a transit authority is using the "no spare vehicles" exception, the entity could place the vehicle with the inoperative lift on a route with headways between accessible buses shorter than 30 minutes.

Section 37.165 Lift and Securement Use

This provision applies to both public and private entities.

All people using common wheelchairs (an inclusive term for mobility devices that fit on lifts meeting Access Board guideline dimensions—30" by 48" and a maximum of 600 pounds for device and user combined—which includes three-wheeled scooters and other so-called non-traditional mobility devices) are to be allowed to ride the entity's vehicles.

Entities may require wheelchair users to ride in designated securement locations. That is, the entity is not required to carry wheelchair users whose wheelchairs would have to park in an aisle or other location where they could obstruct other persons' passage or where they could not be secured or restrained. An entity's vehicle is not required to pick up a wheelchair user when the securement locations are full, just as the vehicle may pass by other passengers waiting at the stop if the bus is full.

The entity may require that wheelchair users make use of securement systems for their mobility devices. The entity, in other words, can require wheelchair users to "buckle up" their mobility devices. The entity is required, on a vehicle meeting Part 38 standards, to use the securement system to secure wheelchairs as provided in that Part. On other vehicles (e.g., existing vehicles with securement systems which do not comply with Part 38 standards), the entity must provide and use a securement system to ensure that the mobility device remains within the securement area. This latter requirement is a mandate to use best efforts to restrain or confine the wheelchair to the securement area. The entity does the best it can, given its securement technology and the nature of the wheelchair. The Department encourages entities with relatively less adequate securement systems on their vehicles, where feasible, to retrofit the vehicles with better securement systems, that can successfully restrain a wide variety of wheelchairs. It is our understanding that the cost of doing so is not enormous.

An entity may not, in any case, deny transportation to a common wheelchair and

its user because the wheelchair cannot be secured or restrained by a vehicle's securement system, to the entity's satisfaction.

Entities have often recommended or required that a wheelchair user transfer out of his or her own device into a vehicle seat. Under this rule, it is no longer permissible to require such a transfer. The entity may provide information on risks and make a recommendation with respect to transfer, but the final decision on whether to transfer is up to the passenger.

The entity's personnel have an obligation to ensure that a passenger with a disability is able to take advantage of the accessibility and safety features on vehicles. Consequently, the driver or other personnel must provide assistance with the use of lifts, ramps, and securement devices. For example, the driver must deploy the lift properly and safely. If the passenger cannot do so independently, the driver must assist the passenger with using the securement device. On a vehicle which uses a ramp for entry, the driver may have to assist in pushing a manual wheelchair up the ramp (particularly where the ramp slope is relatively steep). All these actions my involve a driver leaving his seat. Even in entities whose drivers traditionally do not leave their seats (e.g., because of labor-management agreements or company rules), this assistance must be provided. This rule overrides any requirements to the contrary.

Wheelchair users—especially those using electric wheelchairs often have a preference for entering a lift platform and vehicle in a particular direction (e.g., backing on or going on frontwards). Except where the only way of successfully maneuvering a device onto a vehicle or into its securement area, or an overriding safety concern (i.e., a direct threat) requires one way of doing this or another, the transit provider should respect the passenger's preference. We note that most electric wheelchairs are usually not equipped with rearview mirrors, and that many persons who use them are not able to rotate their heads sufficiently to see behind. When an electric wheelchair must back up a considerable distance, this can have unfortunate results for other people's toes.

People using canes or walkers and other standees with disabilities who do not use wheelchairs but have difficulty using steps (e.g., an elderly person who can walk on a plane without use of a mobility aid but cannot raise his or her legs sufficiently to climb bus steps) must also be permitted to use the lift, on request.

Section 37.167 Other Service Requirements

The requirements in this section apply to both public and private entities.

On fixed route systems, the entity must announce stops. These stops include transfer points with other fixed routes. This means that any time a vehicle is to stop where a passenger can get off and transfer to another bus or rail line (or to another form of transportation, such as commuter rail or ferry), the stop would be announced. The announcement can be made personally by the vehicle operator or can be made by a recording system. If the vehicle is small enough so that the operator can make himself or herself heard without a P.A. system, it is not necessary to use the system.

Announcements also must be made at major intersections or destination points. The rule does not define what major intersections or destination points are. This is a judgmental matter best left to the local planning process. In addition, the entity must make announcements at sufficient intervals along a route to orient a visually impaired passenger to his or her location. The other required announcements may serve this function in many instances, but if there is a long distance between other announcements, fill-in orientation announcements would be called for. The entity must announce any stop requested by a passenger with a disability, even if it does not meet any of the other criteria for announcement.

When vehicles from more than one route serve a given stop or station, the entity must provide a means to assist an individual with a visual impairment or other disability in determining which is the proper vehicle to enter. Some entities have used external speakers. UMTA is undertaking a study to determine what is the best available technology in this area. Some transit properties have used colored mitts, or numbered cards, to allow passengers to inform drivers of what route they wanted to use. The idea is to prevent, at a stop where vehicles from a number of routes arrive, a person with a visual impairment from having to ask every driver whether the bus is the right one. The rule does not prescribe what means is to be used, only that some effective means be provided.

Service animals shall always be permitted to accompany their users in any private or public transportation vehicle or facility. One of the most common misunderstandings about service animals is that they are limited to being guide dogs for persons with visual impairments. Dogs are trained to assist people with a wide variety of disabilities, including individuals with hearing and mobility impairments. Other animals (e.g., monkeys) are sometimes used as service animals as well. In any of these situations, the entity must permit the service animal to accompany its user.

Part 38 requires a variety of accessibility equipment. This section requires that the entity use the equipment it has. For example, it would be contrary to this provision for a transit authority to bolt its bus lifts shut because transit authority had difficulty maintaining the lifts. It does little good to have a public address system on a vehicle if the operator does not use it to make announcements (except, as noted above, in the situation where the driver can make himself or herself heard without recourse to amplification.)

Entities must make communications and information available, using accessible formats and technology (e.g., Braille, large print, TDDs) to obtain information about transportation services. Someone cannot adequately use the bus system if schedule and route information is not available in a form he or she can use. If there is only one phone line on which ADA paratransit eligible individuals can reserve trips, and the line is chronically busy, individuals cannot schedule service. Such obstacles to the use of transportation service are contrary to this section. (The latter could, in some circumstances, be viewed as a capacity constraint.)

It is inconsistent with this section for a transit provider to refuse to let a passenger use a lift at any designated stop, unless the lift is physically unable to deploy or the lift would be damaged if it did deploy (see discussion under § 37.123). In addition, if a temporary situation at the stop (e.g., construction, an accident, a landslide) made the stop unsafe for anyone to use, the provider could decline to operate the lift there (just as it refused to open the door for other passengers at the same point). The provider could not, however, declare a stop "off limits" to persons with disabilities that is used for other persons. If the transit authority has concerns about barriers or safety hazards that peculiarly affect individuals with disabilities that would use the stop, it should consider making efforts to move the stop.

Under DOT hazardous materials rules, a passenger may bring a portable medical oxygen supply on board a vehicle. Since the hazardous materials rules permit this, transit providers cannot prohibit it. For further information on hazardous materials rules, as they may affect transportation of assistive devices, entities may contact the Department's Research and Special Programs Administration, Office of Hazardous Materials Transportation (202–366–0656).

One concern that has been expressed is that transportation systems (particularly some rail systems) may make it difficult for persons with disabilities to board or disembark from vehicles by very rapidly closing doors on the vehicles before individuals with disabilities (who may move more slowly through crowds in the vehicle or platform than other persons) have a chance to get on or off the vehicle. Doing so is contrary to the rule; operators must make appropriate provision to give individuals with disabilities adequate time to board or disembark.

Section 37.169 Interim Requirements for Over-the-Road Bus Service Operated by Private Entities

Private over-the-road bus (OTRB) service is, first of all, subject to all the other private entity requirements of the rule. The requirements of this section are in addition to the other applicable provisions.

Boarding assistance is required. The Department cannot require any particular boarding assistance devices at this time. Each operator may decide what mode of boarding assistance is appropriate for its operation. We agree with the discussion in the DOJ Title II rule's preamble that carrying is a disfavored method of providing assistance to an individual with a disability. However, since accessible private OTRBs cannot be required by this rule, there may be times when carrying is the only available means of providing access to an OTRB, if the entity does not exercise its discretion to provide an alternative means. It is required by the rule that any employee who provides

boarding assistance—above all, who may carry or otherwise directly physically assist a passenger—must be trained to provide this assistance appropriately and safely.

The baggage priority provision for wheelchairs and other assistive devices involves a similar procedure to that established in the Department's Air Carrier Access Act rule (14 CFR part 382). In brief, it provides that, at any given stop, a person with a wheelchair or other assistive device would have the device loaded before other items at this stop. An individual traveling with a wheelchair is not similarly situated to a person traveling with luggage. For the wheelchair user, the wheelchair is an essential mobility device, without which travel is impossible. The rationale of this provision is that, while no one wants his or her items left behind, carrying the wheelchair is more important to its user than ordinary luggage to a traveler. If it comes to an either/or choice (the wheelchair user's luggage would not have any priority over other luggage, however). There would be no requirement, under this provision, for "bumping" baggage already on the bus from previous stops in order to make room for the wheelchair.

The entity could require advance notice from a passenger in only one circumstance. If a passenger needed boarding assistance, the entity could require up to 48 hours' advance notice for the purpose of providing needed assistance. While advance notice requirements are generally undesirable, this appears to be a case in which a needed accommodation may be able to be provided successfully only if the transportation provider knows in advance that some extra staffing is needed to accomplish it. While the primary need for advance notice appears to be in the situation of an unstaffed station, there could be other situations in which advance notice was needed in order to ensure that the accommodation could be made. Entities should not ask for advance notice in all cases, but just in those cases in which it is really needed for this purpose. Even if advance notice is not provided, the entity has the obligation to provide boarding assistance if it can be provided with available staff.

Section 37.171 Equivalency Requirement for Demand Responsive Service Operated by Private Entities Not Primarily in the Business of Transporting People

This provision is a service requirement closely related to the private entity requirements for §§ 37.101–37.105 of this part. Entities in this category are always required to provide equivalent service, regardless of what they are doing with respect to the acquisition of vehicles. The effect of this provision may be to require some entities to arrange, either through acquiring their own accessible vehicles or coordinating with other providers, to have accessible vehicles available to meet the equivalency standards of § 37.105 or otherwise to comply with those standards.

Section 37.173 Training

A well-trained workforce is essential in ensuring that the accessibility-related equipment and accommodations required by the ADA actually result in the delivery of good transportation service to individuals with disabilities. The utility of training was recognized by Congress as well. (*See* S. Rept. 100–116 at 48.) At the same time, we believe that training should be conducted in an efficient and effective manner, with appropriate flexibility allowed to the organizations that must carry it out. Each transportation provider is to design a training program which suits the needs of its particular operation. While we are confident of this approach, we are mindful that the apparent lack of training has been a source of complaint to UMTA and transit providers. Good training is difficult and it is essential.

Several points of this section deserve emphasis. First, the requirements for training apply to private as well as to public providers, of demand responsive as well as of fixed route service. Training is just as necessary for the driver of a taxicab, a hotel shuttle, or a tour bus as it is for a driver in an UMTA-funded city bus system.

Second, training must be to proficiency. The Department is not requiring a specific course of training or the submission of a training plan for DOT approval. However, every employee of a transportation provider who is involved with service to persons with disabilities must have been trained so that he or she knows what needs to be done to provide the service in the right way. When it comes to providing service to individuals with disabilities, ignorance is no excuse for failure.

While there is no specific requirement for recurrent or refresher training, there is an obligation to ensure that, at any given time, employees are trained to proficiency. An employee who has forgotten what he was told in past training sessions, so that he or she does not know what needs to be done to serve individuals with disabilities, does not meet the standard of being trained to proficiency.

Third, training must be appropriate to the duties of each employee. A paratransit dispatcher probably must know how to use a TDD and enough about various disabilities to know what sort of vehicle to dispatch. A bus driver must know how to operate lifts and securement devices properly. A mechanic who works on lifts must know how to maintain them. Cross-training, while useful in some instances, is not required, so long as each employee is trained to proficiency in what he or she does with respect to service to individuals with disabilities.

Fourth, the training requirement goes both to technical tasks and human relations. Employees obviously need to know how to run equipment the right way. If an employee will be assisting wheelchair users in transferring from a wheelchair to a vehicle seat, the employee needs training in how to do this safely. But every public contact employee also has to understand the necessity of treating individuals with disabilities courteously and respectfully, and the details of what that involves.

One of the best sources of information on how best to train personnel to interact appropriately with individuals with disabilities is the disability community itself. Consequently, the Department urges entities to consult with disability organizations concerning how to train their personnel. Involving these groups in the process of establishing training programs, in addition to providing useful information, should help to establish or improve working relationships among transit providers and disability groups that, necessarily, will be of long duration. We note that several transit providers use persons with disabilities to provide the actual training. Others have reported that role playing is an effective method to instill an appreciation of the particular perspective of one traveling with a disability.

Finally, one of the important points in training concerns differences among individuals with disabilities. All individuals with disabilities, of course, are not alike. The appropriate ways one deals with persons with various kinds of disabilities (e.g., mobility, vision, hearing, or mental impairments) are likely to differ and, while no one expects bus drivers to be trained as disability specialists, recognizing relevant differences and responding to them appropriately is extremely significant. Public entities who contract with private entities to have service provided—above all, complementary paratransit—are responsible for ensuring that contractor personnel receive the appropriate training.

Title 49, Code of Federal Regulations, is amended by adding a new part 38, to read as follows:

PART 38—AMERICANS WITH DISABILITIES ACT (ADA) ACCESSIBILITY SPECIFICATIONS FOR TRANSPORTATION VEHICLES

Subpart A—General

Sec.
38.1 Purpose.
38.2 Equivalent facilitation.
38.3 Definitions.
38.4 Miscellaneous instructions.

Subpart B—Buses, Vans and Systems

38.21 General.
38.23 Mobility aid accessibility.
38.25 Doors, steps and thresholds.
38.27 Priority seating signs.
38.29 Interior circulation, handrails and stanchions.
38.31 Lighting.
38.33 Fare box.
38.35 Public information system.
38.37 Stop request.
38.39 Destination and route signs.

Subpart C—Rapid Rail Vehicles and Systems

38.51 General.
38.53 Doorways.
38.55 Priority seating signs.
38.57 Interior circulation, handrails and stanchions.
38.59 Floor surfaces.
38.61 Public information system.
38.63 Between-car barriers.

Subpart D—Light Rail Vehicles and Systems

38.71 General.
38.73 Doorways.
38.75 Priority seating signs.
38.77 Interior circulation, handrails and stanchions.
38.79 Floors, steps and thresholds,
38.81 Lighting.
38.83 Mobility aid accessibility.
38.85 Between-car barriers.
38.87 Public information system.

Subpart E—Commuter Rail Cars and Systems

38.91 General.
38.93 Doorways.
38.95 Mobility aid accessibility.
38.97 Interior circulation, handrails and stanchions.
38.99 Floors, steps and thresholds.
38.101 Lighting.
38.103 Public information system.
38.105 Priority seating signs.
38.107 Restrooms.
38.109 Between-car barriers.

Subpart F—Intercity Rail Cars and Systems

38.111 General.
38.113 Doorways.
38.115 Interior circulation, handrails and stanchions.
38.117 Floors, steps and thresholds.
38.119 Lighting.
38.121 Public information system.
38.123 Restrooms.
38.125 Mobility aid accessibility.
38.127 Sleeping compartments.

Subpart G—Over-the-Road Buses and Systems

38.151 General.
38.153 Doors, steps and thresholds.
38.155 Interior circulation, handrails and stanchions.
38.157 Lighting.
38.159 Mobility aid accessibility. [Reserved]

Subpart H—Other Vehicles and Systems

38.171 General.
38.173 Automated guideway transit vehicles and systems.
38.175 High-speed rail cars, monorails and systems.
38.177 Ferries, excursion boats and other vessels. [Reserved]
38.179 Trams, and similar vehicles, and systems.

Figures in Part 38

Appendix to Part 38: Guidance Material

Authority: Americans With Disabilities Act of 1990, Public Law. 101-336 (42 U.S.C. 12204); 49 U.S.C. 322.

Subpart A—General

§ 38.1 Purpose.

This part provides minimum guidelines and requirements for accessibility standards in part 37 of this title for transportation vehicles required to be accessible by the Americans With Disabilities Act (ADA) of 1990 (42 U.S.C. 1201 et seq.).

§ 38.2 Equivalent facilitation.

Departures from particular technical and scoping requirements of these guidelines by use of other designs and technologies are permitted where the alternative designs and technologies used will provide substantially equivalent or greater access to and usability of the vehicle. Departures are to be considered on a case-by-case basis under procedures set forth in § 37.7 of this title.

§ 38.3 Definitions.

See § 37.3 of this title.

§ 38.4 Miscellaneous instructions.

(a) *Dimensional conventions.* Dimensions that are not noted as minimum or maximum are absolute.

(b) *Dimensional tolerances.* All dimensions are subject to conventional engineering tolerances for material properties and field conditions, including normal anticipated wear not exceeding accepted industry-wide standards and practices.

(c) *Notes.* The text of these guidelines does not contain notes or footnotes. Additional information, explanations, and advisory materials are located in the Appendix.

(d) *General terminology.* (1) *Comply with* means meet one or more specification of these guidelines.

(2) *If* or *if * * * then* denotes a specification that applies only when the conditions described are present.

(3) *May* denotes an option or alternative.

(4) *Shall* denotes a mandatory specification or requirement.

(5) *Should* denotes an advisory specification or recommendation.

Subpart B—Buses, Vans and Systems

§ 38.21 General.

(a) New, used or remanufactured buses and vans (except over-the-road buses covered by subpart G of this part), to be considered accessible by regulations in part 37 of this title shall comply with the applicable provisions of this subpart.

(b) If portions of the vehicle are modified in a way that affects or could affect accessibility, each such portion shall comply, to the extent practicable, with the applicable provisions of this subpart. This provision does not require that inaccessible buses be retrofitted with lifts, ramps or other boarding devices.

§ 38.23 Mobility aid accessibility.

(a) *General.* All vehicles covered by this subpart shall provide a level-change mechanism or boarding device (e.g., lift or ramp) complying with paragraph (b) or (c) of this section and sufficient clearances to permit a wheelchair or other mobility aid user to reach a securement location. At least two securement locations and devices, complying with paragraph (d) of this section, shall be provided on vehicles in excess of 22 feet in length; at least one securement location and device, complying with paragraph (d) of this section, shall be provided on vehicles 22 feet in length or less.

(b) *Vehicle lift*—(1) *Design load.* The design load of the lift shall be at least 600 pounds. Working parts, such as cables, pulleys, and shafts, which can be expected to wear, and upon which the lift depends for support of the load, shall have a safety factor of at least six, based on the ultimate strength of the material. Nonworking parts, such as platform, frame, and attachment hardware which would not be expected to wear, shall have a safety factor of at least three, based on the ultimate strength of the material.

(2) *Controls*—(i) *Requirements.* The controls shall be interlocked with the vehicle brakes, transmission, or door, or shall provide other appropriate mechanisms or systems, to ensure that the vehicle cannot be moved when the lift is not stowed and so the lift cannot be deployed unless the interlocks or systems are engaged. The lift shall deploy to all levels (i.e., ground, curb, and intermediate positions) normally encountered in the operating environment. Where provided, each control for deploying, lowering, raising, and stowing the lift and lowering the roll-off barrier shall be of a momentary contact type requiring continuous manual pressure by the operator and shall not allow improper lift sequencing when the lift platform is occupied. The controls shall allow reversal of the lift operation sequence, such as raising or lowering a platform that is part way down, without allowing an occupied platform to fold or retract into the stowed position.

(ii) *Exception.* Where the lift is designed to deploy with its long dimension parallel to the vehicle axis and which pivots into or out of the vehicle while occupied (i.e., "rotary lift"), the requirements of this paragraph prohibiting the lift from being stowed while occupied shall not apply if the stowed position is within the passenger compartment and the lift is intended to be stowed while occupied.

(3) *Emergency operation.* The lift shall incorporate an emergency method of deploying, lowering to ground level with a lift occupant, and raising and stowing the empty lift if the power to the lift

fails. No emergency method, manual or otherwise, shall be capable of being operated in a manner that could be hazardous to the lift occupant or to the operator when operated according to manufacturer's instructions, and shall not permit the platform to be stowed or folded when occupied, unless the lift is a rotary lift and is intended to be stowed while occupied.

(4) *Power or equipment failure.* Platforms stowed in a vertical position, and deployed platforms when occupied, shall have provisions to prevent their deploying, falling, or folding any faster than 12 inches/second or their dropping of an occupant in the event of a single failure of any load carrying component.

(5) *Platform barriers.* The lift platform shall be equipped with barriers to prevent any of the wheels of a wheelchair or mobility aid from rolling off the platform during its operation. A movable barrier or inherent design feature shall prevent a wheelchair or mobility aid from rolling off the edge closest to the vehicle until the platform is in its fully raised position. Each side of the lift platform which extends beyond the vehicle in its raised position shall have a barrier a minimum 1½ inches high. Such barriers shall not interfere with maneuvering into or out of the aisle. The loading-edge barrier (outer barrier) which functions as a loading ramp when the lift is at ground level, shall be sufficient when raised or closed, or a supplementary system shall be provided, to prevent a power wheelchair or mobility aid from riding over or defeating it. The outer barrier of the lift shall automatically raise or close, or a supplementary system shall automatically engage, and remain raised, closed, or engaged at all times that the platform is more than 3 inches above the roadway or sidewalk and the platform is occupied. Alternatively, a barrier or system may be raised, lowered, opened, closed, engaged, or disengaged by the lift operator, provided an interlock or inherent design feature prevents the lift from rising unless the barrier is raised or closed or the supplementary system is engaged.

(6) *Platform surface.* The platform surface shall be free of any protrusions over ¼ inch high and shall be slip resistant. The platform shall have a minimum clear width of 28½ inches at the platform, a minimum clear width of 30 inches measured from 2 inches above the platform surface to 30 inches above the platform, and a minimum clear length of 48 inches measured from 2 inches above the surface of the platform to 30 inches above the surface of the platform. (See Fig. 1)

(7) *Platform gaps.* Any openings between the platform surface and the raised barriers shall not exceed ⅝ inch in width. When the platform is at vehicle floor height with the inner barrier (if applicable) down or retracted, gaps between the forward lift platform edge and the vehicle floor shall not exceed ½ inch horizontally and ⅝ inch vertically. Platforms on semi-automatic lifts may have a hand hold not exceeding 1½ inches by 4½ inches located between the edge barriers.

(8) *Platform entrance ramp.* The entrance ramp, or loading-edge barrier used as a ramp, shall not exceed a slope of 1:8, measured on level ground, for a maximum rise of 3 inches, and the transition from roadway or sidewalk to ramp may be vertical without edge treatment up to ¼ inch. Thresholds between ¼ inch and ½ inch high shall be beveled with a slope no greater than 1:2.

(9) *Platform deflection.* The lift platform (not including the entrance ramp) shall not deflect more than 3 degrees (exclusive of vehicle roll or pitch) in any direction between its unloaded position and its position when loaded with 600 pounds applied through a 26 inch by 26 inch test pallet at the centroid of the platform.

(10) *Platform movement.* No part of the platform shall move at a rate exceeding 6 inches/second during lowering and lifting an occupant, and shall not exceed 12 inches/second during deploying or stowing. This requirement does not apply to the deployment or stowage cycles of lifts that are manually deployed or stowed. The maximum platform horizontal and vertical acceleration when occupied shall be 0.3g.

(11) *Boarding direction.* The lift shall permit both inboard and outboard facing of wheelchair and mobility aid users.

(12) *Use by standees.* Lifts shall accommodate persons using walkers, crutches, canes or braces or who otherwise have difficulty using steps. The platform may be marked to indicate a preferred standing position.

(13) *Handrails.* Platforms on lifts shall be equipped with handrails on two sides, which move in tandem with the lift, and which shall be graspable and provide support to standees throughout the entire lift operation. Handrails shall have a usable component at least 8 inches long with the lowest portion a minimum 30 inches above the platform and the highest portion a maximum 38 inches above the platform. The handrails shall be capable of withstanding a force of 100 pounds concentrated at any point on the handrail without permanent deformation of the rail or its supporting structure. The handrail shall have a cross-sectional diameter between 1¼ inches and 1½ inches or shall provide an equivalent grasping surface, and have eased edges with corner radii of not less than ⅛ inch. Handrails shall be placed to provide a minimum 1½ inches knuckle clearance from the nearest adjacent surface. Handrails shall not interfere with wheelchair or mobility aid maneuverability when entering or leaving the vehicle.

(c) *Vehicle ramp*—(1) *Design load.* Ramps 30 inches or longer shall support a load of 600 pounds, placed at the centroid of the ramp distributed over an area of 26 inches by 26 inches, with a safety factor of at least 3 based on the ultimate strength of the material. Ramps shorter than 30 inches shall support a load of 300 pounds.

(2) *Ramp surface.* The ramp surface shall be continuous and slip resistant; shall not have protrusions from the surface greater than ¼ inch high; shall have a clear width of 30 inches; and shall accommodate both four-wheel and three-wheel mobility aids.

(3) *Ramp threshold.* The transition from roadway or sidewalk and the transition from vehicle floor to the ramp may be vertical without edge treatment up to ¼ inch. Changes in level between ¼ inch and ½ inch shall be beveled with a slope no greater than 1:2.

(4) *Ramp barriers.* Each side of the ramp shall have barriers at least 2 inches high to prevent mobility aid wheels from slipping off.

(5) *Slope.* Ramps shall have the least slope practicable and shall not exceed 1:4 when deployed to ground level. If the height of the vehicle floor from which the ramp is deployed is 3 inches or less above a 6-inch curb, a maximum slope of 1:4 is permitted; if the height of the vehicle floor from which the ramp is deployed is 6 inches or less, but greater than 3 inches, above a 6-inch curb, a maximum slope of 1:6 is permitted; if the height of the vehicle floor from which the ramp is deployed is 9 inches or less, but greater than 6 inches, above a 6-inch curb, a maximum slope of 1:8 is permitted; if the height of the vehicle floor from which the ramp is deployed is greater than 9 inches above a 6-inch curb, a slope of 1:12 shall be achieved. Folding or telescoping ramps are permitted provided they meet all structural requirements of this section.

(6) *Attachment.* When in use for boarding or alighting, the ramp shall be firmly attached to the vehicle so that it is not subject to displacement when loading or unloading a heavy power

mobility aid and that no gap between vehicle and ramp exceeds ⅝ inch.

(7) *Stowage.* A compartment, securement system, or other appropriate method shall be provided to ensure that stowed ramps, including portable ramps stowed in the passenger area, do not impinge on a passenger's wheelchair or mobility aid or pose any hazard to passengers in the event of a sudden stop or maneuver.

(8) *Handrails.* If provided, handrails shall allow persons with disabilities to grasp them from outside the vehicle while starting to board, and to continue to use them throughout the boarding process, and shall have the top between 30 inches and 38 inches above the ramp surface. The handrails shall be capable of withstanding a force of 100 pounds concentrated at any point on the handrail without permanent deformation of the rail or its supporting structure. The handrail shall have a cross-sectional diameter between 1¼ inches and 1½ inches or shall provide an equivalent grasping surface, and have eased edges with corner radii of not less than ⅛ inch. Handrails shall not interfere with wheelchair or mobility aid maneuverability when entering or leaving the vehicle.

(d) *Securement devices*— (1) *Design load.* Securement systems on vehicles with GVWRs of 30,000 pounds or above, and their attachments to such vehicles, shall restrain a force in the forward longitudinal direction of up to 2,000 pounds per securement leg or clamping mechanism and a minimum of 4,000 pounds for each mobility aid. Securement systems on vehicles with GVWRs of up to 30,000 pounds, and their attachments to such vehicles, shall restrain a force in the forward longitudinal direction of up to 2,500 pounds per securement leg or clamping mechanism and a minimum of 5,000 pounds for each mobility aid.

(2) *Location and size.* The securement system shall be placed as near to the accessible entrance as practicable and shall have a clear floor area of 30 inches by 48 inches. Such space shall adjoin, and may overlap, an access path. Not more than 6 inches of the required clear floor space may be accommodated for footrests under another seat provided there is a minimum of 9 inches from the floor to the lowest part of the seat overhanging the space. Securement areas may have fold-down seats to accommodate other passengers when a wheelchair or mobility aid is not occupying the area, provided the seats, when folded up, do not obstruct the clear floor space required. (See Fig. 2)

(3) *Mobility aids accommodated.* The securement system shall secure common wheelchairs and mobility aids and shall either be automatic or easily attached by a person familiar with the system and mobility aid and having average dexterity.

(4) *Orientation.* In vehicles in excess of 22 feet in length, at least one securement device or system required by paragraph (a) of this section shall secure the wheelchair or mobility aid facing toward the front of the vehicle. Additional securement devices or systems shall secure the wheelchair or mobility aid facing forward, or rearward with a padded barrier, extending from a height of 38 inches from the vehicle floor to a height of 56 inches from the vehicle floor with a width of 18 inches, laterally centered immediately in back of the seated individual. In vehicles 22 feet in length or less, the required securement device may secure the wheelchair or mobility aid either facing toward the front of the vehicle or facing rearward, with a padded barrier as described. Additional securement locations shall be either forward of rearward facing with a padded barrier. Such barriers need not be solid provided equivalent protection is afforded.

(5) *Movement.* When the wheelchair or mobility aid is secured in accordance with manufacturer's instructions, the securement system shall limit the movement of an occupied wheelchair or mobility aid to no more than 2 inches in any direction under normal vehicle operating conditions.

(6) *Stowage.* When not being used for securement, or when the securement area can be used by standees, the securement system shall not interfere with passenger movement, shall not present any hazardous condition, shall be reasonably protected from vandalism, and shall be readily accessed when needed for use.

(7) *Seat belt and shoulder harness.* For each wheelchair or mobility aid securement device provided, a passenger seat belt and shoulder harness, complying with all applicable provisions of part 571 of this title, shall also be provided for use by wheelchair or mobility aid users. Such seat belts and shoulder harnesses shall not be used in lieu of a device which secures the wheelchair or mobility aid itself.

§ 38.25 Doors, steps and thresholds.

(a) *Slip resistance.* All aisles, steps, floor areas where people walk and floors in securement locations shall have slip-resistant surfaces.

(b) *Contrast.* All step edges, thresholds and the boarding edge of ramps or lift platforms shall have a band of color(s) running the full width of the step or edge which contrasts from the step tread and riser, or lift or ramp surface, either light-on-dark or dark-on-light.

(c) *Door height.* For vehicles in excess of 22 feet in length, the overhead clearance between the top of the door opening and the raised lift platform, or highest point of a ramp, shall be a minimum of 68 inches. For vehicles of 22 feet in length or less, the overhead clearance between the top of the door opening and the raised lift platform, or highest point of a ramp, shall be a minimum of 56 inches.

§ 38.27 Priority seating signs.

(a) Each vehicle shall contain sign(s) which indicate that seats in the front of the vehicle are priority seats for persons with disabilities, and that other passengers should make such seats available to those who wish to use them. At least one set of forward-facing seats shall be so designated.

(b) Each securement location shall have a sign designating it as such.

(c) Characters on signs required by paragraphs (a) and (b) of this section shall have a width-to-height ratio between 3:5 and 1:1 and a stroke width-to-height ratio between 1:5 and 1:10, with a minimum character height (using an upper case "X") of ⅝ inch, with "wide" spacing (generally, the space between letters shall be 1/16 the height of upper case letters), and shall contrast with the background either light-on-dark or dark-on-light.

§ 38.29 Interior circulation, handrails and stanchions.

(a) Interior handrails and stanchions shall permit sufficient turning and maneuvering space for wheelchairs and other mobility aids to reach a securement location from the lift or ramp.

(b) Handrails and stanchions shall be provided in the entrance to the vehicle in a configuration which allows persons with disabilities to grasp such assists from outside the vehicle while starting to board, and to continue using such assists throughout the boarding and fare collection process. Handrails shall have a cross-sectional diameter between 1¼ inches and 1½ inches or shall provide an equivalent grasping surface, and have eased edges with corner radii of not less than ⅛ inch. Handrails shall be placed to provide a minimum 1½ inches knuckle clearance from the nearest adjacent surface. Where on-board fare collection devices are used on vehicles in excess of 22 feet in length, a horizontal passenger assist shall be located across the front of the vehicle and shall prevent passengers from

sustaining injuries on the fare collection device or windshield in the event of a sudden deceleration. Without restricting the vestibule space, the assist shall provide support for a boarding passenger from the front door through the boarding procedure. Passengers shall be able to lean against the assist for security while paying fares.

(c) For vehicles in excess of 22 feet in length, overhead handrail(s) shall be provided which shall be continuous except for a gap at the rear doorway.

(d) Handrails and stanchions shall be sufficient to permit safe boarding, on-board circulation, seating and standing assistance, and alighting by persons with disabilities.

(e) For vehicles in excess of 22 feet in length with front-door lifts or ramps, vertical stanchions immediately behind the driver shall either terminate at the lower edge of the aisle-facing seats, if applicable, or be "dog-legged" so that the floor attachment does not impede or interfere with wheelchair footrests. If the driver seat platform must be passed by a wheelchair or mobility aid user entering the vehicle, the platform, to the maximum extent practicable, shall not extend into the aisle or vestibule beyond the wheel housing.

(f) For vehicles in excess of 22 feet in length, the minimum interior height along the path from the lift to the securement location shall be 68 inches. For vehicles of 22 feet in length or less, the minimum interior height from lift to securement location shall be 56 inches.

§ 38.31 Lighting.

(a) Any stepwell or doorway immediately adjacent to the driver shall have, when the door is open, at least 2 foot-candles of illumination measured on the step tread or lift platform.

(b) Other stepwells and doorways, including doorways in which lifts or ramps are installed, shall have, at all times, at least 2 foot-candles of illumination measured on the step tread, or lift or ramp, when deployed at the vehicle floor level.

(c) The vehicle doorways, including doorways in which lifts or ramps are installed, shall have outside light(s) which, when the door is open, provide at least 1 foot-candle of illumination on the street surface for a distance of 3 feet perpendicular to all points on the bottom step tread outer edge. Such light(s) shall be located below window level and shielded to protect the eyes of entering and existing passengers.

§ 38.33 Fare box.

Where provided, the farebox shall be located as far forward as practicable and shall not obstruct traffic in the vestibule, especially wheelchairs or mobility aids.

§ 38.35 Public information system.

(a) Vehicles in excess of 22 feet in length, used in multiple-stop, fixed-route service, shall be equipped with a public address system permitting the driver, or recorded or digitized human speech messages, to announce stops and provide other passenger information within the vehicle.

(b) [Reserved]

§ 38.37 Stop request.

(a) Where passengers may board or alight at multiple stops at their option, vehicles in excess of 22 feet in length shall provide controls adjacent to the securement location for requesting stops and which alerts the driver that a mobility aid user wishes to disembark. Such a system shall provide auditory and visual indications that the request has been made.

(b) Controls required by paragraph (a) of this section shall be mounted no higher than 48 inches and no lower than 15 inches above the floor, shall be operable with one hand and shall not require tight grasping, pinching, or twisting of the wrist. The force required to activate controls shall be no greater than 5 lbf (22.2 N).

§ 38.39 Destination and route signs.

(a) Where destination or route information is displayed on the exterior of a vehicle, each vehicle shall have illuminated signs on the front and boarding side of the vehicle.

(b) Characters on signs required by paragraph (a) of this section shall have a width-to-height ratio between 3:5 and 1:1 and a stroke width-to-height ratio between 1:5 and 1:10, with a minimum character height (using an upper case "X") of 1 inch for signs on the boarding side and a minimum character height of 2 inches for front "headsigns", with "wide" spacing (generally, the space between letters shall be 1/16 the height of upper case letters), and shall contrast with the background, either dark-on-light or light-on-dark.

Subpart C—Rapid Rail Vehicles and Systems

§ 38.51 General.

(a) New, used and remanufactured rapid rail vehicles, to be considered accessible by regulations in part 37 of this title, shall comply with this subpart.

(b) If portions of the vehicle are modified in a way that affects or could affect accessibility, each such portion shall comply, to the extent practicable, with the applicable provisions of this subpart. This provision does not require that inaccessible vehicles be retrofitted with lifts, ramps or other boarding devices.

(c) Existing vehicles which are retrofitted to comply with the "one-car-per-train rule" of § 37.93 of this title shall comply with §§ 38.55, 38.57(b), 38.59 of this part and shall have, in new and key stations, at least one door complying with §§ 38.53 (a)(1), (b) and (d) of this part. Removal of seats is not required. Vehicles previously designed and manufactured in accordance with the accessibility requirements of part 609 of this title or the Secretary of Transportation regulations implementing section 504 of the Rehabilitation Act of 1973 that were in effect before October 7, 1991, and which can be entered and used from stations in which they are to be operated, may be used to satisfy the requirements of § 37.93 of this title.

§ 38.53 Doorways.

(a) *Clear width.* (1) Passenger doorways on vehicle sides shall have clear openings at least 32 inches wide when open.

(2) If doorways connecting adjoining cars in a multi-car train are provided, and if such doorway is connected by an aisle with a minimum clear width of 30 inches to one or more spaces where wheelchair or mobility aid users can be accommodated, then such doorway shall have a minimum clear opening of 30 inches to permit wheelchair and mobility aid users to be evacuated to an adjoining vehicle in an emergency.

(b) *Signage.* The International Symbol of Accessibility shall be displayed on the exterior of accessible vehicles operating on an accessible rapid rail system unless all vehicles are accessible and are not marked by the access symbol. (See Fig. 6.)

(c) *Signals.* Auditory and visual warning signals shall be provided to alert passengers of closing doors.

(d) *Coordination with boarding platform*—(1) *Requirements.* Where new vehicles will operate in new stations, the design of vehicles shall be coordinated with the boarding platform design such that the horizontal gap between each vehicle door at rest and the platform shall be no greater than 3 inches and the height of the vehicle floor shall be within plus or minus ⅝ inch of the platform height under all normal passenger load conditions. Vertical alignment may be accomplished by vehicle air suspension or other suitable means of meeting the requirement.

(2) *Exception.* New vehicles operating in existing stations may have a floor height within plus or minus 1½ inches of

the platform height. At key stations, the horizontal gap between at least one door of each such vehicle and the platform shall be no greater than 3 inches.

(3) *Exception.* Retrofitted vehicles shall be coordinated with the platform in new and key stations such that the horizontal gap shall be no greater than 4 inches and the height of the vehicle floor, under 50% passenger load, shall be within plus or minus 2 inches of the platform height.

§ 38.55 Priority seating signs.

(a) Each vehicle shall contain sign(s) which indicate that certain seats are priority seats for persons with disabilities, and that other passengers should make such seats available to those who wish to use them.

(b) Characters on signs required by paragraph (a) of this section shall have a width-to-height ratio between 3:5 and 1:1 and a stroke width-to-height ratio between 1:5 and 1:10, with a minimum character height (using an upper case "X") of ⅝ inch, with "wide" spacing (generally, the space between letters shall be 1/16 the height of upper case letters), and shall contrast with the background, either light-on-dark or dark-on-light.

§ 38.57 Interior circulation, handrails and stanchions.

(a) Handrails and stanchions shall be provided to assist safe boarding, on-board circulation, seating and standing assistance, and alighting by persons with disabilities.

(b) Handrails, stanchions, and seats shall allow a route at least 32 inches wide so that at least two wheelchair or mobility aid users can enter the vehicle and position the wheelchairs or mobility aids in areas, each having a minimum clear space of 48 inches by 30 inches, which do not unduly restrict movement of other passengers. Space to accommodate wheelchairs and mobility aids may be provided within the normal area used by standees and designation of specific spaces is not required. Particular attention shall be given to ensuring maximum maneuverability immediately inside doors. Ample vertical stanchions from ceiling to seat-back rails shall be provided. Vertical stanchions from ceiling to floor shall not interfere with wheelchair or mobility aid user circulation and shall be kept to a minimum in the vicinity of doors.

(c) The diameter or width of the gripping surface of handrails and stanchions shall be 1¼ inches to 1½ inches or provide an equivalent gripping surface and shall provide a minimum 1½ inches knuckle clearance from the nearest adjacent surface.

§ 38.59 Floor surfaces.

Floor surfaces on aisles, places for standees, and areas where wheelchair and mobility aid users are to be accommodated shall be slip-resistant.

§ 38.61 Public information system.

(a)(1) *Requirements.* Each vehicle shall be equipped with a public address system permitting transportation system personnel, or recorded or digitized human speech messages, to announce stations and provide other passenger information. Alternative systems or devices which provide equivalent access are also permitted. Each vehicle operating in stations having more than one line or route shall have an external public address system to permit transportation system personnel, or recorded or digitized human speech messages, to announce train, route, or line identification information.

(2) *Exception.* Where station announcement systems provide information on arriving trains, an external train speaker is not required.

(b) [Reserved].

§ 38.63 Between-car barriers.

(a) *Requirement.* Suitable devices or systems shall be provided to prevent, deter or warn individuals from inadvertently stepping off the platform between cars. Acceptable solutions include, but are not limited to, pantograph gates, chains, motion detectors or similar devices.

(b) *Exception.* Between-car barriers are not required where platform screens are provided which close off the platform edge and open only when trains are correctly aligned with the doors.

Subpart D—Light Rail Vehicles and Systems

§ 38.71 General.

(a) New, used and remanufactured light rail vehicles, to be considered accessible by regulations in part 37 of this title shall comply with this subpart.

(b)(1) Vehicles intended to be operated solely in light rail systems confined entirely to a dedicated right-of-way, and for which all stations or stops are designed and constructed for revenue service after the effective date of standards for design and construction in §37.21 and § 37.23 of this title shall provide level boarding and shall comply with § 38.73(d)(1) and § 38.85 of this part.

(2) Vehicles designed for, and operated on, pedestrian malls, city streets, or other areas where level boarding is not practicable shall provide wayside or car-borne lifts, mini-high platforms, or other means of access in compliance with § 38.83 (b) or (c) of this part.

(c) If portions of the vehicle are modified in a way that affects or could affect accessibility, each such portion shall comply, to the extent practicable, with the applicable provisions of this subpart. This provision does not require that inaccessible vehicles be retrofitted with lifts, ramps or other boarding devices.

(d) Existing vehicles retrofitted to comply with the "one-car-per-train rule" at § 37.93 of this title shall comply with § 38.75, § 38.77(c), § 38.79(a) and § 38.83(a) of this part and shall have, in new and key stations, at least one door which complies with §§ 38.73 (a)(1), (b) and (d) of this part. Vehicles previously designed and manufactured in accordance with the accessibility requirements of part 609 of this title or the Secretary of Transportation regulations implementing section 504 of the Rehabilitation Act of 1973 that were in effect before October 7, 1991, and which can be entered and used from stations in which they are to be operated, may be used to satisfy the requirements of § 37.93 of this title.

§ 38.73 Doorways.

(a) *Clear width*—(1) All passenger doorways on vehicle sides shall have minimum clear openings of 32 inches when open.

(2) If doorways connecting adjoining cars in a multi-car train are provided, and if such doorway is connected by an aisle with a minimum clear width of 30 inches to one or more spaces where wheelchair or mobility aid users can be accommodated, then such doorway shall have a minimum clear opening of 30 inches to permit wheelchair and mobility aid users to be evacuated to an adjoining vehicle in an emergency.

(b) *Signage.* The International Symbol of Accessibility shall be displayed on the exterior of each vehicle operating on an accessible light rail system unless all vehicles are accessible and are not marked by the access symbol (see fig. 6).

(c) *Signals.* Auditory and visual warning signals shall be provided to alert passengers of closing doors.

(d) *Coordination with boarding platform*—(1) *Requirements.* The design of level-entry vehicles shall be coordinated with the boarding platform or mini-high platform design so that the horizontal gap between a vehicle at rest and the platform shall be no greater than 3 inches and the height of the vehicle floor shall be within plus or

minus ⅝ inch of the platform height. Vertical alignment may be accomplished by vehicle air suspension, automatic ramps or lifts, or any combination.

(2) *Exception.* New vehicles operating in existing stations may have a floor height within plus or minus 1½ inches of the platform height. At key stations, the horizontal gap between at least one door of each such vehicle and the platform shall be no greater than 3 inches.

(3) *Exception.* Retrofitted vehicles shall be coordinated with the platform in new and key stations such that the horizontal gap shall be no greater than 4 inches and the height of the vehicle floor, under 50% passenger load, shall be within plus or minus 2 inches of the platform height.

(4) *Exception.* Where it is not operationally or structurally practicable to meet the horizontal or vertical requirements of paragraphs (d) (1), (2) or (3) of this section, platform or vehicle devices complying with § 38.83(b) or platform or vehicle mounted ramps or bridge plates complying with § 38.83(c) shall be provided.

§ 38.75 Priority seating signs.

(a) Each vehicle shall contain sign(s) which indicate that certain seats are priority seats for persons with disabilities, and that other passengers should make such seats available to those who wish to use them.

(b) Where designated wheelchair or mobility aid seating locations are provided, signs shall indicate the location and advise other passengers of the need to permit wheelchair and mobility aid users to occupy them.

(c) Characters on signs required by paragraphs (a) or (b) of this section shall have a width-to-height ratio between 3:5 and 1:1 and a stroke width-to-height ratio between 1:5 and 1:10, with a minimum character height (using an upper case "X") of ⅝ inch, with "wide" spacing (generally, the space between letters shall be 1/16 the height of upper case letters), and shall contrast with the background, either light-on-dark or dark-on-light.

§ 38.77 Interior circulation, handrails and stanchions.

(a) Handrails and stanchions shall be sufficient to permit safe boarding, on-board circulation, seating and standing assistance, and alighting by persons with disabilities.

(b) At entrances equipped with steps, handrails and stanchions shall be provided in the entrance to the vehicle in a configuration which allows passengers to grasp such assists from outside the vehicle while starting to board, and to continue using such handrails or stanchions throughout the boarding process. Handrails shall have a cross-sectional diameter between 1¼ inches and 1½ inches or shall provide an equivalent grasping surface, and have eased edges with corner radii of not less than ⅛ inch. Handrails shall be placed to provide a minimum 1½ inches knuckle clearance from the nearest adjacent surface. Where on-board fare collection devices are used, a horizontal passenger assist shall be located between boarding passengers and the fare collection device and shall prevent passengers from sustaining injuries on the fare collection device or windshield in the event of a sudden deceleration. Without restricting the vestibule space, the assist shall provide support for a boarding passenger from the door through the boarding procedure. Passengers shall be able to lean against the assist for security while paying fares.

(c) At all doors on level-entry vehicles, and at each entrance accessible by lift, ramp, bridge plate or other suitable means, handrails, stanchions, passenger seats, vehicle driver seat platforms, and fare boxes, if applicable, shall be located so as to allow a route at least 32 inches wide so that at least two wheelchair or mobility aid users can enter the vehicle and position the wheelchairs or mobility aids in areas, each having a minimum clear space of 48 inches by 30 inches, which do not unduly restrict movement of other passengers. Space to accommodate wheelchairs and mobility aids may be provided within the normal area used by standees and designation of specific spaces is not required. Particular attention shall be given to ensuring maximum maneuverability immediately inside doors. Ample vertical stanchions from ceiling to seat-back rails shall be provided. Vertical stanchions from ceiling to floor shall not interfere with wheelchair or mobility aid circulation and shall be kept to a minimum in the vicinity of accessible doors.

§ 38.79 Floors, steps and thresholds.

(a) Floor surfaces on aisles, step treads, places for standees, and areas where wheelchair and mobility aid users are to be accommodated shall be slip-resistant.

(b) All thresholds and step edges shall have a band of color(s) running the full width of the step or threshold which contrasts from the step tread and riser or adjacent floor, either light-on-dark or dark-on-light.

§ 38.81 Lighting.

(a) Any stepwell or doorway with a lift, ramp or bridge plate immediately adjacent to the driver shall have, when the door is open, at least 2 foot-candles of illumination measured on the step tread or lift platform.

(b) Other stepwells, and doorways with lifts, ramps or bridge plates, shall have, at all times, at least 2 foot-candles of illumination measured on the step tread or lift or ramp, when deployed at the vehicle floor level.

(c) The doorways of vehicles not operating at lighted station platforms shall have outside lights which provide at least 1 foot-candle of illumination on the station platform or street surface for a distance of 3 feet perpendicular to all points on the bottom step tread. Such lights shall be located below window level and shielded to protect the eyes of entering and exiting passengers.

§ 38.83 Mobility aid accessibility.

(a)(1) *General.* All new light rail vehicles, other than level entry vehicles, covered by this subpart shall provide a level-change mechanism or boarding device (e.g., lift, ramp or bridge plate) complying with either paragraph (b) or (c) of this section and sufficient clearances to permit at least two wheelchair or mobility aid users to reach areas, each with a minimum clear floor space of 48 inches by 30 inches, which do not unduly restrict passenger flow. Space to accommodate wheelchairs and mobility aids may be provided within the normal area used by standees and designation of specific spaces is not required.

(2) *Exception.* If lifts, ramps or bridge plates meeting the requirements of this section are provided on station platforms or other stops required to be accessible, or mini-high platforms complying with § 38.73(d) of this part are provided, the vehicle is not required to be equipped with a car-borne device. Where each new vehicle is compatible with a single platform-mounted access system or device, additional systems or devices are not required for each vehicle provided that the single device could be used to provide access to each new vehicle if passengers using wheelchairs or mobility aids could not be accommodated on a single vehicle.

(b) *Vehicle lift*—(1) *Design load.* The design load of the lift shall be at least 600 pounds. Working parts, such as cables, pulleys, and shafts, which can be expected to wear, and upon which the lift depends for support of the load, shall have a safety factor of at least six, based on the ultimate strength of the material. Nonworking parts, such as

platform, frame, and attachment hardware which would not be expected to wear, shall have a safety factor of at least three, based on the ultimate strength of the material.

(2) *Controls*—(i) *Requirements.* The controls shall be interlocked with the vehicle brakes, propulsion system, or door, or shall provide other appropriate mechanisms or systems, to ensure that the vehicle cannot be moved when the lift is not stowed and so the lift cannot be deployed unless the interlocks or systems are engaged. The lift shall deploy to all levels (i.e., ground, curb, and intermediate positions) normally encountered in the operating environment. Where provided, each control for deploying, lowering, raising, and stowing the lift and lowering the roll-off barrier shall be of a momentary contact type requiring continuous manual pressure by the operator and shall not allow improper lift sequencing when the lift platform is occupied. The controls shall allow reversal of the lift operation sequence, such as raising or lowering a platform that is part way down, without allowing an occupied platform to fold or retract into the stowed position.

(ii) *Exception.* Where physical or safety constraints prevent the deployment at some stops of a lift having its long dimension perpendicular to the vehicle axis, the transportation entity may specify a lift which is designed to deploy with its long dimension parallel to the vehicle axis and which pivots into or out of the vehicle while occupied (i.e., "rotary lift"). The requirements of paragraph (b)(2)(i) of this section prohibiting the lift from being stowed while occupied shall not apply to a lift design of this type if the stowed position is within the passenger compartment and the lift is intended to be stowed while occupied.

(iii) *Exception.* The brake or propulsion system interlocks requirement does not apply to a station platform mounted lift provided that a mechanical, electrical or other system operates to ensure that vehicles do not move when the lift is in use.

(3) *Emergency operation.* The lift shall incorporate an emergency method of deploying, lowering to ground level with a lift occupant, and raising and stowing the empty lift if the power to the lift fails. No emergency method, manual or otherwise, shall be capable of being operated in a manner that could be hazardous to the lift occupant or to the operator when operated according to manufacturer's instructions, and shall not permit the platform to be stowed or folded when occupied, unless the lift is a rotary lift intended to be stowed while occupied.

(4) *Power or equipment failure.* Lift platforms stowed in a vertical position, and deployed platforms when occupied, shall have provisions to prevent their deploying, falling, or folding any faster than 12 inches/second or their dropping of an occupant in the event of a single failure of any load carrying component.

(5) *Platform barriers.* The lift platform shall be equipped with barriers to prevent any of the wheels of a wheelchair or mobility aid from rolling off the lift during its operation. A movable barrier or inherent design feature shall prevent a wheelchair or mobility aid from rolling off the edge closest to the vehicle until the lift is in its fully raised position. Each side of the lift platform which extends beyond the vehicle in its raised position shall have a barrier a minimum 1½ inches high. Such barriers shall not interfere with maneuvering into or out of the aisle. The loading-edge barrier (outer barrier) which functions as a loading ramp when the lift is at ground level, shall be sufficient when raised or closed, or a supplementary system shall be provided, to prevent a power wheelchair or mobility aid from riding over or defeating it. The outer barrier on the outboard of the lift shall automatically rise or close, or a supplementary system shall automatically engage, and remain raised, closed, or engaged at all times that the lift is more than 3 inches above the station platform or roadway and the lift is occupied. Alternatively, a barrier or system may be raised, lowered, opened, closed, engaged or disengaged by the lift operator provided an interlock or inherent design feature prevents the lift from rising unless the barrier is raised or closed or the supplementary system is engaged.

(6) *Platform surface.* The lift platform surface shall be free of any protrusions over ¼ inch high and shall be slip resistant. The lift platform shall have a minimum clear width of 28½ inches at the platform, a minimum clear width of 30 inches measured from 2 inches above the lift platform surface to 30 inches above the surface, and a minimum clear length of 48 inches measured from 2 inches above the surface of the platform to 30 inches above the surface. (See Fig. 1)

(7) *Platform gaps.* Any openings between the lift platform surface and the raised barriers shall not exceed ⅝ inch wide. When the lift is at vehicle floor height with the inner barrier (if applicable) down or retracted, gaps between the forward lift platform edge and vehicle floor shall not exceed ½ inch horizontally and ⅝ inch vertically. Platforms on semi-automatic lifts may have a hand hold not exceeding 1½ inches by 4½ inches located between the edge barriers.

(8) *Platform entrance ramp.* The entrance ramp, or loading-edge barrier used as a ramp, shall not exceed a slope of 1:8 measured on level ground, for a maximum rise of 3 inches, and the transition from the station platform or roadway to ramp may be vertical without edge treatment up to ¼ inch. Thresholds between ¼ inch and ½ inch high shall be beveled with a slope no greater than 1:2.

(9) *Platform deflection.* The lift platform (not including the entrance ramp) shall not deflect more than 3 degrees (exclusive of vehicle roll) in any direction between its unloaded position and its position when loaded with 600 pounds applied through a 26 inch by 26 inch test pallet at the centroid of the lift platform.

(10) *Platform movement.* No part of the platform shall move at a rate exceeding 6 inches/second during lowering and lifting an occupant, and shall not exceed 12 inches/second during deploying or stowing. This requirement does not apply to the deployment or stowage cycles of lifts that are manually deployed or stowed. The maximum platform horizontal and vertical acceleration when occupied shall be 0.3g.

(11) *Boarding direction.* The lift shall permit both inboard and outboard facing of wheelchairs and mobility aids.

(12) *Use by standees.* Lifts shall accommodate persons using walkers, crutches, canes or braces or who otherwise have difficulty using steps. The lift may be marked to indicate a preferred standing position.

(13) *Handrails.* Platforms on lifts shall be equipped with handrails, on two sides, which move in tandem with the lift which shall be graspable and provide support to standees throughout the entire lift operation. Handrails shall have a usable component at least 8 inches long with the lowest portion a minimum 30 inches above the platform and the highest portion a maximum 38 inches above the platform. The handrails shall be capable of withstanding a force of 100 pounds concentrated at any point on the handrail without permanent deformation of the rail or its supporting structure. Handrails shall have a cross-sectional diameter between 1¼ inches and 1½ inches or shall provide an equivalent grasping surface, and have eased edges with corner radii of not less than ⅛ inch. Handrails shall be placed to

provide a minimum 1½ inches knuckle clearance from the nearest adjacent surface. Handrails shall not interfere with wheelchair or mobility aid maneuverability when entering or leaving the vehicle.

(c) *Vehicle ramp or bridge plate.*—(1) *Design load.* Ramps or bridge plates 30 inches or longer shall support a load of 600 pounds, placed at the centroid of the ramp or bridge plate distributed over an area of 26 inches, with a safety factor of at least 3 based on the ultimate strength of the material. Ramps or bridge plates shorter than 30 inches shall support a load of 300 pounds.

(2) *Ramp surface.* The ramp or bridge plate surface shall be continuous and slip resistant, shall not have protrusions from the surface greater then ¼ inch, shall have a clear width of 30 inches, and shall accommodate both four-wheel and three-wheel mobility aids.

(3) *Ramp threshold.* The transition from roadway or station platform and the transition from vehicle floor to the ramp or bridge plate may be vertical without edge treatment up to ¼ inch. Changes in level between ¼ inch and ½ inch shall be beveled with a slope no greater than 1:2.

(4) *Ramp barriers.* Each side of the ramp or bridge plate shall have barriers at least 2 inches high to prevent mobility aid wheels from slipping off.

(5) *Slope.* Ramps or bridge plates shall have the least slope practicable. If the height of the vehicle floor, under 50% passenger load, from which the ramp is deployed is 3 inches or less above the station platform a maximum slope of 1:4 is permitted; if the height of the vehicle floor, under 50% passenger load, from which the ramp is deployed is 6 inches or less, but more than 3 inches, above the station platform a maximum slope of 1:6 is permitted; if the height of the vehicle floor, under 50% passenger load, from which the ramp is deployed is 9 inches or less, but more than 6 inches, above the station platform a maximum slope of 1:8 is permitted; if the height of the vehicle floor, under 50% passenger load, from which the ramp is deployed is greater than 9 inches above the station platform a slope of 1:12 shall be achieved. Folding or telescoping ramps are permitted provided they meet all structural requirements of this section.

(6) *Attachment*—(i) *Requirement.* When in use for boarding or alighting, the ramp or bridge plate shall be attached to the vehicle, or otherwise prevented from moving such that it is not subject to displacement when loading or unloading a heavy power mobility aid and that any gaps between vehicle and ramp or bridge plate, and station platform and ramp or bridge plate, shall not exceed ⅝ inch.

(ii) *Exception.* Ramps or bridge plates which are attached to, and deployed from, station platforms are permitted in lieu of vehicle devices provided they meet the displacement requirements of paragraph (c)(6)(i) of this section.

(7) *Stowage.* A compartment, securement system, or other appropriate method shall be provided to ensure that stowed ramps or bridge plates, including portable ramps or bridges plates stowed in the passenger area, do not impinge on a passenger's wheelchair or mobility aid or pose any hazard to passengers in the event of a sudden stop.

(8) *Handrails.* If provided, handrails shall allow persons with disabilities to grasp them from outside the vehicle while starting to board, and to continue to use them throughout the boarding process, and shall have the top between 30 inches and 38 inches above the ramp surface. The handrails shall be capable of withstanding a force of 100 pounds concentrated at any point on the handrail without permanent deformation of the rail or its supporting structure. The handrail shall have a cross-sectional diameter between 1¼ inches and 1½ inches or shall provide an equivalent grasping surface, and have "eased" edges with corner radii of not less than ⅛ inch. Handrails shall not interfere with wheelchair or mobility aid maneuverability when entering or leaving the vehicle.

§ 38.85 Between-car barriers.

Where vehicles operate in a high-platform, level-boarding mode, devices or systems shall be provided to prevent, deter or warn individuals from inadvertently stepping off the platform between cars. Appropriate devices include, but are not limited to, pantograph gates, chains, motion detectors or other suitable devices.

§ 38.87 Public information system.

(a) Each vehicle shall be equipped with an interior public address system permitting transportation system personnel, or recorded or digitized human speech messages, to announce stations and provide other passenger information. Alternative systems or devices which provide equivalent access are also permitted.

(b) [Reserved]

Subpart E—Commuter Rail Cars and Systems

§ 38.91 General.

(a) New, used and remanufactured commuter rail cars, to be considered accessible by regulations in part 37 of this title, shall comply with this subpart.

(b) If portions of the car are modified in such a way that it affects or could affect accessibility, each such portion shall comply, to the extent practicable, with the applicable provisions of this subpart. This provision does not require that inaccessible cars be retrofitted with lifts, ramps or other boarding devices.

(c)(1) Commuter rail cars shall comply with §§ 38.93(d) and 38.109 of this part for level boarding wherever structurally and operationally practicable.

(2) Where level boarding is not structurally or operationally practicable, commuter rail cars shall comply § 38.95 of this part.

(d) Existing vehicles retrofitted to comply with the "one-car-per-train rule" at § 37.93 of this title shall comply with §§ 38.93(e), 38.95(a) and 38.107 of this part and shall have, in new and key stations at least one door on each side from which passengers board which complies with § 38.93(d) of this part. Vehicles previously designed and manufactured in accordance with the program accessibility requirements of section 504 of the Rehabilitation Act of 1973, or implementing regulations of the Secretary of Transportation that were in effect before October 7, 1991; and which can be entered and used from stations in which they are to be operated, may be used to satisfy the requirements of § 37.93 of this title.

§ 38.93 Doorways.

(a) *Clear width.* (1) At least one door on each side of the car from which passengers board opening onto station platforms and at least one adjacent doorway into the passenger coach compartment, if provided, shall have a minimum clear opening of 32 inches.

(2) If doorways connecting adjoining cars in a multi-car train are provided, and if such doorway is connected by an aisle with a minimum clear width of 30 inches to one or more spaces where wheelchair or mobility aid users can be accommodated, then such doorway shall have, to the maximum extent practicable in accordance with the regulations issued under the Federal Railroad Safety Act of 1970 (49 CFR parts 229 and 231), a clear opening of 30 inches.

(b) *Passageways.* A route at least 32 inches wide shall be provided from doors required to be accessible by paragraph (a)(1) of this section to seating locations complying with § 38.95(d) of this part. In cars where such doorways require passage through a vestibule, such vestibule shall have a minimum width of 42 inches. (See Fig. 3.)

(c) *Signals.* If doors to the platform close automatically or from a remote location, auditory and visual warning signals shall be provided to alert passengers or closing doors.

(d) *Coordination with boarding platform*—(1) *Requirements.* Cars operating in stations with high platforms, or mini-high platforms, shall be coordinated with the boarding platform design such that the horizontal gap between a car at rest and the platform shall be no greater than 3 inches and the height of the car floor shall be within plus or minus ⅝ inch of the platform height. Vertical alignment may be accomplished by car air suspension, platform lifts or other devices, or any combination.

(2) *Exception.* New vehicles operating in existing stations may have a floor height within plus or minus 1½ inches of the platform height. At key stations, the horizontal gap between at least one accessible door of each such vehicle and the platform shall be no greater than 3 inches.

(3) *Exception.* Where platform set-backs do not allow the horizontal gap or vertical alignment specified in paragraph (d)(1) or (d)(2) of this section, car, platform or portable lifts complying with § 38.95(b) of this part, or car or platform ramps or bridge plates, complying with § 38.95(c) of this part, shall be provided.

(4) *Exception.* Retrofitted vehicles shall be coordinated with the platform in new and key stations such that the horizontal gap shall be no greater than 4 inches and the height of the vehicle floor, under 50% passenger load, shall be within plus or minus 2 inches of the platform height.

(e) *Signage.* The International Symbol of Accessibility shall be displaced on the exterior of all doors complying with this section unless all cars are accessible and are not marked by the access symbol (see Fig. 6). Appropriate signage shall also indicate which accessible doors are adjacent to an accessible restroom, if applicable.

§ 38.95 Mobility aid accessibility.

(a)(1) *General.* All new commuter rail cars, other than level entry cars, covered by this subpart shall provide a level-change mechanism or boarding device (e.g., lift, ramp or bridge plate) complying with either paragraph (b) or (c) of this section; sufficient clearances to permit a wheelchair or mobility aid user to reach a seating location; and at least two wheelchair or mobility aid seating locations complying with paragraph (d) of this section.

(2) *Exception.* If portable or platform lifts, ramps or bridge plates meeting the applicable requirements of this section are provided on station platforms or other stops required to be accessible, or mini-high platforms complying with § 38.93(d) are provided, the car is not required to be equipped with a car-borne device. Where each new car is compatible with a single platform-mounted access system or device, additional systems or devices are not required for each car provided that the single device could be used to provide access to each new car if passengers using wheelchairs or mobility aids could not be accommodated on a single car.

(b) *Car Lift*—(1) *Design load.* The design load of the lift shall be at least 600 pounds. Working parts, such as cables, pulleys, and shafts, which can be expected to wear, and upon which the lift depends for support of the load, shall have a safety factor of at least six, based on the ultimate strength of the material. Nonworking parts, such as platform, frame, and attachment hardware which would not be expected to wear, shall have a safety factor of at least three, based on the ultimate strength of the material.

(2) *Controls*—(i) *Requirements.* The controls shall be interlocked with the car brakes, propulsion system, or door, or shall provide other appropriate mechanisms or systems, to ensure that the car cannot be moved when the lift is not stowed and so the lift cannot be deployed unless the interlocks or systems are engaged. The lift shall deploy to all platform levels normally encountered in the operating environment. Where provided, each control for deploying, lowering, raising, and stowing the lift and lowering the roll-off barrier shall be of a monetary contact type requiring continuous manual pressure by the operator and shall not allow improper lift sequencing when the lift platform is occupied. The controls shall allow reversal of the lift operation sequence, such as raising or lowering a platform that is part way down, without allowing an occupied platform to fold or retract into the stowed position.

(ii) *Exception.* Where physical or safety constraints prevent the deployment at some stops of a lift having its long dimension perpendicular to the car axis, the transportation entity may specify a lift which is designed to deploy with its long dimension parallel to the car axis and which pivots into or out of the car while occupied (i.e., "rotary lift"). The requirements of paragraph (b)(2)(i) of this section prohibiting the lift from being stowed while occupied shall not apply to a lift design of this type if the stowed position is within the passenger compartment and the lift is intended to be stowed while occupied.

(iii) *Exception.* The brake or propulsion system interlock requirement does not apply to a platform mounted or portable lift provided that a mechanical, electrical or other system operates to ensure that cars do not move when the lift is in use.

(3) *Emergency operation.* The lift shall incorporate an emergency method of deploying, lowering to ground or platform level with a lift occupant, and raising and stowing the empty lift if the power to the lift fails. No emergency method, manual or otherwise, shall be capable of being operated in a manner that could be hazardous to the lift occupant or to the operator when operated according to manufacturer's instructions, and shall not permit the platform to be stowed or folded when occupied, unless the lift is a rotary lift intended to be stowed while occupied.

(4) *Power or equipment failure.* Platforms stowed in a vertical position, and deployed platforms when occupied, shall have provisions to prevent their deploying, falling, or folding any faster than 12 inches/second or their dropping of an occupant in the event of a single failure of any load carrying component.

(5) *Platform barriers.* The lift platform shall be equipped with barriers to prevent any of the wheels of a wheelchair or mobility aid from rolling off the lift during its operation. A movable barrier or inherent design feature shall prevent a wheelchair or mobility aid from rolling off the edge closest to the car until the lift is in its fully raised position. Each side of the lift platform which, in its raised position, extends beyond the car shall have a barrier a minimum 1½ inches high. Such barriers shall not interfere with maneuvering into or out of the car. The loading-edge barrier (outer barrier) which functions as a loading ramp when the lift is at ground or station platform level, shall be sufficient when raised or closed, or a supplementary system shall be provided, to prevent a power wheelchair or mobility aid from riding over or defeating it. The outer barrier of the lift shall automatically rise or close, or a supplementary system shall automatically engage, and remain raised, closed, or engaged at all times that the lift platform is more than 3 inches above the station platform and the lift is occupied. Alternatively, a barrier or system may be raised, lowered, opened, closed, engaged or disengaged by the lift operator provided an interlock or inherent design feature prevents the lift from rising unless the

barrier is raised or closed or the supplementary system is engaged.

(6) *Platform surface.* The lift platform surface shall be free of any protrusions over ¼ inch high and shall be slip resistant. The lift platform shall have a minimum clear width of 28½ inches at the platform, a minimum clear width of 30 inches measured from 2 inches above the lift platform surface to 30 inches above the surface, and a minimum clear length of 48 inches measured from 2 inches above the surface of the platform to 30 inches above the surface. (See Fig. 1)

(7) *Platform gaps.* Any openings between the lift platform surface and the raised barriers shall not exceed ⅝ inch wide. When the lift is at car floor height with the inner barrier down (if applicable) or retracted, gaps between the forward lift platform edge and car floor shall not exceed ½ inch horizontally and ⅝ inch vertically.

(8) *Platform entrance ramp.* The entrance ramp, or loading-edge barrier used as a ramp, shall not exceed a slope of 1:8, when measured on level ground, for a maximum rise of 3 inches, and the transition from station platform to ramp may be vertical without edge treatment up to ¼ inch. Thresholds between ¼ inch and ½ inch high shall be beveled with a slope no greater than 1:2.

(9) *Platform deflection.* The lift platform (not including the entrance ramp) shall not deflect more than 3 degrees (exclusive of vehicle roll) in any direction between its unloaded position and its position when loaded with 600 pounds applied through a 26 inch by 26 inch test pallet at the centroid of the lift platform.

(10) *Platform movement.* No part of the platform shall move at a rate exceeding 6 inches/second during lowering and lifting an occupant, and shall not exceed 12 inches/second during deploying or stowing. This requirement does not apply to the deployment or stowage cycles of lifts that are manually deployed or stowed. The maximum platform horizontal and vertical acceleration when occupied shall be 0.3g.

(11) *Boarding direction.* The lift shall permit both inboard and outboard facing of wheelchairs and mobility aids.

(12) *Use by standees.* Lifts shall accommodate persons using walkers, crutches, canes or braces or who otherwise have difficulty using steps. The lift may be marked to indicate a preferred standing position.

(13) *Handrails.* Platforms on lifts shall be equipped with handrails, on two sides, which move in tandem with the lift which shall be graspable and provide support to standees throughout the entire lift operation. Handrails shall have a usable component at least 8 inches long with the lowest portion a minimum 30 inches above the platform and the highest portion a maximum 38 inches above the platform. The handrails shall be capable of withstanding a force of 100 pounds concentrated at any point on the handrail without permanent deformation of the rail or its supporting structure. The handrail shall have a cross-sectional diameter between 1¼ inches and 1½ inches or shall provide an equivalent grasping surface, and have eased edges with corner radii of not less than ⅛ inch. Handrails shall be placed to provide a minimum 1½ inches knuckle clearance from the nearest adjacent surface. Handrails shall not interfere with wheelchair or mobility aid maneuverability when entering or leaving the car.

(c) *Car ramp or bridge plate*—(1) *Design load.* Ramps or bridge plates 30 inches or longer shall support a load of 600 pounds, placed at the centroid of the ramp or bridge plate distributed over an area of 26 inches by 26 inches, with a safety factor of at least 3 based on the ultimate strength of the material. Ramps or bridge plates shorter than 30 inches shall support a load of 300 pounds.

(2) *Ramp surface.* The ramp or bridge plate surface shall be continuous and slip resistant, shall not have protrusions from the surface greater than ¼ inch high, shall have a clear width of 30 inches and shall accommodate both four-wheel and three-wheel mobility aids.

(3) *Ramp threshold.* The transition from station platform to the ramp or bridge plate and the transition from car floor to the ramp or bridge plate may be vertical without edge treatment up to ¼ inch. Changes in level between ¼ inch and ½ inch shall be beveled with a slope no greater than 1:2.

(4) *Ramp barriers.* Each side of the ramp or bridge plate shall have barriers at least 2 inches high to prevent mobility aid wheels from slipping off.

(5) *Slope.* Ramps or bridge plates shall have the least slope practicable. If the height of the vehicle floor, under 50% passenger load, from which the ramp is deployed is 3 inches or less above the station platform a maximum slope of 1:4 is permitted; if the height of the vehicle floor, under 50% passenger load, from which the ramp is deployed is 6 inches or less, but more than 3 inches, above the station platform a maximum slope of 1:6 is permitted; if the height of the vehicle floor, under 50% passenger load, from which the ramp is deployed is 9 inches or less, but more than 6 inches, above the station platform a maximum slope of 1:8 is permitted; if the height of the vehicle floor, under 50% passenger load, from which the ramp is deployed is greater than 9 inches above the station platform a slope of 1:12 shall be achieved. Folding or telescoping ramps are permitted provided they meet all structural requirements of this section.

(6) *Attachment*—(i) *Requirement.* When in use for boarding or alighting, the ramp or bridge plate shall be attached to the vehicle, or otherwise prevented from moving such that it is not subject to displacement when loading or unloading a heavy power mobility aid and that any gaps between vehicle and ramp or bridge plate, and station platform and ramp or bridge plate, shall not exceed ⅝ inch.

(ii) *Exception.* Ramps or bridge plates which are attached to, and deployed from, station platforms are permitted in lieu of car devices provided they meet the displacement requirements of paragraph (c)(6)(i) of this section.

(7) *Stowage.* A compartment, securement system, or other appropriate method shall be provided to ensure that stowed ramps or bridge plates, including portable ramps or bridge plates stowed in the passenger area, do not impinge on a passenger's wheelchair or mobility aid or pose any hazard to passengers in the event of a sudden stop.

(8) *Handrails.* If provided, handrails shall allow persons with disabilities to grasp them from outside the car while starting to board, and to continue to use them throughout the boarding process, and shall have the top between 30 inches and 38 inches above the ramp surface. The handrails shall be capable of withstanding a force of 100 pounds concentrated at any point on the handrail without permanent deformation of the rail or its supporting structure. The handrail shall have a cross-sectional diameter between 1¼ inches and 1½ inches or shall provide an equivalent grasping surface, and have eased edges with corner radii of not less than ⅛ inch. Handrails shall not interfere with wheelchair or mobility aid maneuverability when entering or leaving the car.

(d) *Mobility aid seating location.* Spaces for persons who wish to remain in their wheelchairs or mobility aids shall have a minimum clear floor space 48 inches by 30 inches. Such spaces shall adjoin, and may overlap, an accessible path. Not more than 6 inches of the required clear floor space may be accommodated for footrests under another seat provided there is a minimum of 9 inches from the floor to the lowest part of the seat overhanging the space. Seating spaces may have

fold-down or removable seats to accommodate other passengers when a wheelchair or mobility aid user is not occupying the area, provided the seats, when folded up, do not obstruct the clear floor space required. (See Fig. 2.)

§ 38.97 Interior circulation, handrails and stanchions.

(a) Where provided, handrails or stanchions within the passenger compartment shall be placed to permit sufficient turning and maneuvering space for wheelchairs and other mobility aids to reach a seating location, complying with § 38.95(d) of this part, from an accessible entrance. The diameter or width of the gripping surface of interior handrails and stanchions shall be 1¼ inches to 1½ inches or shall provide an equivalent gripping surface. Handrails shall be placed to provide a minimum 1½ inches knuckle clearance from the nearest adjacent surface.

(b) Where provided, handrails or stanchions shall be sufficient to permit safe boarding, on-board circulation, seating and standing assistance, and alighting by persons with disabilities.

(c) At entrances equipped with steps, handrails or stanchions shall be provided in the entrance to the car in a configuration which allows passengers to grasp such assists from outside the car while starting to board, and to continue using such assists throughout the boarding process, to the extent permitted by part 231 of this title.

§ 38.99 Floors, steps and thresholds.

(a) Floor surfaces on aisles, step treads, places for standees, and areas where wheelchair and mobility aid users are to be accommodated shall be slip-resistant.

(b) All thresholds and step edges shall have a band of color(s) running the full width of the step or threshold which contrasts from the step tread and riser or adjacent floor, either light-on-dark or dark-on-light.

§ 38.101 Lighting

(a) Any stepwell or doorway with a lift, ramp or bridge plate shall have, when the door is open, at least 2 footcandles of illumination measured on the step tread, ramp, bridge plate, or lift platform.

(b) The doorways of cars not operating at lighted station platforms shall have outside lights which, when the door is open, provide at least 1 footcandle of illumination on the station platform surface for a distance of 3 feet perpendicular to all points on the bottom step tread edge. Such lights shall be shielded to protect the eyes of entering and exiting passengers.

§ 38.103 Public information system.

(a) Each car shall be equipped with an interior public address system permitting transportation system personnel, or recorded or digitized human speech messages, to announce stations and provide other passenger information. Alternative systems or devices which provide equivalent access are also permitted.

(b) [Reserved]

§ 38.105 Priority seating signs.

(a) Each car shall contain sign(s) which indicate that certain seats are priority seats for persons with disabilities and that other passengers should make such seats available to those who wish to use them.

(b) Characters on signs required by paragraph (a) shall have a width-to-height ratio between 3:5 and 1:1 and a stroke width-to-height ratio between 1:5 and 1:10, with a minimum character height (using an upper case "X") of ⅝ inch, with "wide" spacing (generally, the space between letters shall be 1/16 the height of upper case letters), and shall contrast with the background either light-on-dark or dark-on-light.

§ 38.107 Restrooms.

(a) If a restroom is provided for the general public, it shall be designed so as to allow a person using a wheelchair or mobility aid to enter and use such restroom as specified in paragraphs (a)(1) through (5) of this section.

(1) The minimum clear floor area shall be 35 inches by 60 inches. Permanently installed fixtures may overlap this area a maximum of 6 inches, if the lowest portion of the fixture is a minimum of 9 inches above the floor, and may overlap a maximum of 19 inches, if the lowest portion of the fixture is a minimum of 29 inches above the floor, provided such fixtures do not interfere with access to the water closet. Fold-down or retractable seats or shelves may overlap the clear floor space at a lower height provided they can be easily folded up or moved out of the way.

(2) The height of the water closet shall be 17 inches to 19 inches measured to the top of the toilet seat. Seats shall not be sprung to return to a lifted position.

(3) A grab bar at least 24 inches long shall be mounted behind the water closet, and a horizontal grab bar at least 40 inches long shall be mounted on at least one side wall, with one end not more than 12 inches from the back wall, at a height between 33 inches and 36 inches above the floor.

(4) Faucets and flush controls shall be operable with one hand and shall not require tight grasping, pinching, or twisting of the wrist. The force required to activate controls shall be no greater than 5 lbf (22.2 N). Controls for flush valves shall be mounted no more than 44 inches above the floor.

(5) Doorways on the end of the enclosure, opposite the water closet, shall have a minimum clear opening width of 32 inches. Doorways on the side wall shall have a minimum clear opening width of 39 inches. Door latches and hardware shall be operable with one hand and shall not require tight grasping, pinching, or twisting of the wrist.

(b) Restrooms required to be accessible shall be in close proximity to at least one seating location for persons using mobility aids and shall be connected to such a space by an unobstructed path having a minimum width of 32 inches.

§ 38.109 Between-car barriers.

Where vehicles operate in a high-platform, level-boarding mode, and where between-car bellows are not provided, devices or systems shall be provided to prevent, deter or warn individuals from inadvertently stepping off the platform between cars. Appropriate devices include, but are not limited to, pantograph gates, chains, motion detectors or other suitable devices.

Subpart F—Intercity Rail Cars and Systems

§ 38.111 General.

(a) New, used and remanufactured intercity rail cars, to be considered accessible by regulations in part 37 of this title shall comply with this subpart to the extent required for each type of car as specified below.

(1) Single-level rail passenger coaches and food service cars (other than single-level dining cars) shall comply with §§ 38.113 through 38.123 of this part. Compliance with § 38.125 of this part shall be required only to the extent necessary to meet the requirements of paragraph (d) of this section.

(2) Single-level dining and lounge cars shall have at least one connecting doorway complying with § 38.113(a)(2) of this part connected to a car accessible to persons using wheelchairs or mobility aids, and at least one space complying with §§ 38.125(d) (2) and (3) of this part, to provide table service to a person who wishes to remain in his or her wheelchair, and space to fold and

store a wheelchair for a person who wishes to transfer to an existing seat.

(3) Bi-level dining cars shall comply with §§ 38.113(a)(2), 38.115(b), 38.117(a), and 38.121 of this part.

(4) Bi-level lounge cars shall have doors on the lower level, on each side of the car from which passengers board, complying with § 38.113, a restroom complying with § 38.123, and at least one space complying with § 38.125(d) (2) and (3) to provide table service to a person who wishes to remain in his or her wheelchair and space to fold and store a wheelchair for a person who wishes to transfer to an existing seat.

(5) Restrooms, complying with § 38.123 shall be provided in single-level rail passenger coaches and food services cars adjacent to the accessible seating locations required by paragraph (d) of this section. Accessible restrooms are required in dining and lounge cars only if restrooms are provided for other passengers.

(6) Sleeper cars shall comply with §§ 38.113 (b) through (d), 38.115 through 38.121, and 38.125, of this part, and have at least one compartment which can be entered and used by a person using a wheelchair or mobility aid and complying with § 38.127 of this part.

(b)(1) If physically and operationally practicable, intercity rail cars shall comply with § 38.113(d) of this part for level boarding.

(2) Where level boarding is not structurally or operationally practicable, intercity rail cars shall comply with § 38.125.

(c) If portions of the car are modified in a way that it affects or could affect accessibility, each such portion shall comply, to the extent practicable, with the applicable provisions of this subpart. This provision does not require that inaccessible cars be retrofitted with lifts, ramps or other boarding devices.

(d) Passenger coaches or food service cars shall have the number of spaces complying with § 38.125(d)(2) of this part and the number of spaces complying with § 38.125(d)(3) of this part, as required by § 37.91 of this title.

(e) Existing cars retrofitted to meet the seating requirements of § 37.91 of this title shall comply with § 38.113(e), § 38.123, § 38.125(d) of this part and shall have at least one door on each side from which passengers board complying with § 38.113(d) of this part. Existing cars designed and manufactured to be accessible in accordance with the Secretary of Transportation regulations implementing section 504 of the Rehabilitation Act of 1973 that were in effect before October 7, 1991, shall comply with § 38.125(a) of this part.

§ 38.113 Doorways.

(a) *Clear width.* (1) At least one doorway, on each side of the car from which passengers board, of each car required to be accessible by § 38.111(a) and where the spaces required by § 38.111(d) of this part are located, and at least one adjacent doorway into coach passenger compartments shall have a minimum clear opening width of 32 inches.

(2) Doorways at ends of cars connecting two adjacent cars, to the maximum extent practicable in accordance with regulations issued under the Federal Railroad Safety Act of 1970 (49 CFR parts 229 and 231), shall have a clear opening width of 32 inches to permit wheelchair and mobility aid users to enter into a single-level dining car, if available.

(b) *Passageway.* Doorways required to be accessible by paragraph (a) of this section shall permit access by persons using mobility aids and shall have an unobstructed passageway at least 32 inches wide leading to an accessible sleeping compartment complying with § 38.127 of this part or seating locations complying with § 38.125(d) of this part. In cars where such doorways require passage through a vestibule, such vestibule shall have a minimum width of 42 inches. (see Fig. 4)

(c) *Signals.* If doors to the platform close automatically or from a remote location, auditory and visual warning signals shall be provided to alert passengers of closing doors.

(d) *Coordination with boarding platforms.*—(1) *Requirements.* Cars which provide level-boarding in stations with high platforms shall be coordinated with the boarding platform or mini-high platform design such that the horizontal gap between a car at rest and the platform shall be no greater than 3 inches and the height of the car floor shall be within plus or minus ⅝ inch of the platform height. Vertical alignment may be accomplished by car air suspension, platform lifts or other devices, or any combination.

(2) *Exception.* New cars operating in existing stations may have a floor height within plus or minus 1½ inches of the platform height.

(3) *Exception.* Where platform set-backs do not allow the horizontal gap or vertical alignment specified in paragraph (d) (1) or (2), platform or portable lifts complying with § 38.125(b) of this part, or car or platform bridge plates, complying with § 38.125(c) of this part, may be provided.

(4) *Exception.* Retrofitted vehicles shall be coordinated with the platform in existing stations such that the horizontal gap shall be no greater than 4 inches and the height of the vehicle floor, under 50% passenger load, shall be within plus or minus 2 inches of the platform height.

(3) *Signage.* The International Symbol of Accessibility shall be displayed on the exterior of all doors complying with this section unless all cars and doors are accessible and are not marked by the access symbol (see fig. 6). Appropriate signage shall also indicate which accessible doors are adjacent to an accessible restroom, if applicable.

§ 38.115 Interior circulation, handrails and stanchions.

(a) Where provided, handrails or stanchions within the passenger compartment shall be placed to permit sufficient turning and maneuvering space for wheelchairs and other mobility aids to reach a seating location, complying with § 38.125(d) of this part, from an accessible entrance. The diameter or width of the gripping surface of interior handrails and stanchions shall be 1¼ inches to 1½ inches or shall provide an equivalent gripping surface. Handrails shall be placed to provide a minimum 1½ inches knuckle clearance from the nearest adjacent surface.

(b) Where provided, handrails and stanchions shall be sufficient to permit safe boarding, on-board circulation, seating and standing assistance, and alighting by persons with disabilities.

(c) At entrances equipped with steps, handrails or stanchions shall be provided in the entrance to the car in a configuration which allows passengers to grasp such assists from outside the car while starting to board, and to continue using such assists throughout the boarding process, to the extent permitted by part 231 of this title.

§ 38.117 Floors, steps and thresholds.

(a) Floor surfaces on aisles, step treads and areas where wheelchair and mobility aid users are to be accommodated shall be slip-resistant.

(b) All step edges and thresholds shall have a band of color(s) running the full width of the step or threshold which contrasts from the step tread and riser or adjacent floor, either light-on-dark or dark-on-light.

§ 38.119 Lighting.

(a) Any stepwell, or doorway with a lift, ramp or bridge plate, shall have, when the door is open, at least 2 foot-candles of illumination measured on the step tread, ramp, bridge plate or lift platform.

(b) The doorways of cars not operating at lighted station platforms

shall have outside lights which, when the door is open, provide at least 1 foot-candle of illumination on the station platform surface for a distance of 3 feet perpendicular to all points on the bottom step tread edge. Such lights shall be shielded to protect the eyes of entering and exiting passengers.

§ 38.121 Public information system.

(a) Each car shall be equipped with a public address system permitting transportation system personnel, or recorded or digitized human speech messages, to announce stations and provide other passenger information. Alternative systems or devices which provide equivalent access are also permitted.

(b) [Reserved].

§ 38.123 Restrooms.

(a) If a restroom is provided for the general public, and an accessible restroom is required by § 38.111 (a) and (e) of this part, it shall be designed so as to allow a person using a wheelchair or mobility aid to enter and use such restroom as specified in paragraphs (a)(1) through (5) of this section.

(1) The minimum clear floor area shall be 35 inches by 60 inches. Permanently installed fixtures may overlap this area a maximum of 6 inches, if the lowest portion of the fixture is a minimum of 9 inches above the floor, and may overlap a maximum of 19 inches, if the lowest portion of the fixture is a minimum of 29 inches above the floor. Fixtures shall not interfere with access to and use of the water closet. Fold-down or retractable seats or shelves may overlap the clear floor space at a lower height provided they can be easily folded up or moved out of the way.

(2) The height of the water closet shall be 17 inches to 19 inches measured to the top of the toilet seat. Seats shall not be sprung to return to a lifted position.

(3) A grab bar at least 24 inches long shall be mounted behind the water closet, and a horizontal grab bar at least 40 inches long shall be mounted on at least one side wall, with one end not more than 12 inches from the back wall, at a height between 33 inches and 36 inches above the floor.

(4) Faucets and flush controls shall be operable with one hand and shall not require tight grasping, pinching, or twisting of the wrist. The force required to activate controls shall be no greater than 5 lbf (22.2 N). Controls for flush valves shall be mounted no more than 44 inches above the floor.

(5) Doorways on the end of the enclosure, opposite the water closet, shall have a minimum clear opening width of 32 inches. Doorways on the side wall shall have a minimum clear opening width of 39 inches. Door latches and hardware shall be operable with one hand and shall not require tight grasping, pinching, or twisting of the wrist.

(b) Restrooms required to be accessible shall be in close proximity to at least one seating location for persons using mobility aids complying with § 38.125(d) of this part and shall be connected to such a space by an unobstructed path having a minimum width of 32 inches.

§ 38.125 Mobility aid accessibility.

(a)(1) *General.* All intercity rail cars, other than level entry cars, required to be accessible by §§ 38.111 (a) and (e) of this subpart shall provide a level-change mechanism or boarding device (e.g., lift, ramp or bridge plate) complying with either paragraph (b) or (c) of this section and sufficient clearances to permit a wheelchair or other mobility aid user to reach a seating location complying with paragraph (d) of this section.

(2) *Exception.* If portable or platform lifts, ramps or bridge plates meeting the applicable requirements of this section are provided on station platforms or other stops required to be accessible, or mini-high platforms complying with § 38.113(d) are provided, the car is not required to be equipped with a car-borne device.

(b) *Car Lift*—(1) *Design load.* The design load of the lift shall be at least 600 pounds. Working parts, such as cables, pulleys, and shafts, which can be expected to wear, and upon which the lift depends for support of the load, shall have a safety factor of at least six, based on the ultimate strength of the material. Nonworking parts, such as platform, frame, and attachment hardware which would not be expected to wear, shall have a safety factor of at least three, based on the ultimate strength of the material.

(2) *Controls*—(i) *Requirements.* The controls shall be interlocked with the car brakes, propulsion system, or door, or shall provide other appropriate mechanisms or systems, to ensure that the car cannot be moved when the lift is not stowed and so the lift cannot be deployed unless the interlocks or systems are engaged. The lift shall deploy to all platform levels normally encountered in the operating environment. Where provided, each control for deploying, lowering, raising, and stowing the lift and lowering the roll-off barrier shall be of a monetary contact type requiring continuous manual pressure by the operator and shall not allow improper lift sequencing when the lift platform is occupied. The controls shall allow reversal of the lift operation sequence, such as raising or lowering a platform that is part way down, without allowing an occupied platform to fold or retract into the stowed position.

(ii) *Exception.* Where physical or safety constraints prevent the deployment at some stops of a lift having its long dimension perpendicular to the car axis, the transportation entity may specify a lift which is designed to deploy with its long dimension parallel to the car axis and which pivots into or out of the car while occupied (i.e., "rotary lift"). The requirements of paragraph (b)(2)(i) of this section prohibiting the lift from being stowed while occupied shall not apply to a lift design of this type if the stowed position is within the passenger compartment and the lift is intended to be stowed while occupied.

(iii) *Exception.* The brake or propulsion system interlocks requirement does not apply to platform mounted or portable lifts provided that a mechanical, electrical or other system operates to ensure that cars do not move when the lift is in use.

(3) *Emergency operation.* The lift shall incorporate an emergency method of deploying, lowering to ground or station platform level with a lift occupant, and raising and stowing the empty lift if the power to the lift fails. No emergency method, manual or otherwise, shall be capable of being operated in a manner that could be hazardous to the lift occupant or to the operator when operated according to manufacturer's instructions, and shall not permit the platform to be stowed or folded when occupied, unless the lift is a rotary lift and is intended to be stowed while occupied.

(4) *Power or equipment failure.* Platforms stowed in a vertical position, and deployed platforms when occupied, shall have provisions to prevent their deploying, falling, or folding any faster than 12 inches/second or their dropping of an occupant in the event of a single failure of any load carrying component.

(5) *Platform barriers.* The lift platform shall be equipped with barriers to prevent any of the wheels of a wheelchair or mobility aid from rolling off the lift during its operation. A movable barrier or inherent design feature shall prevent a wheelchair or mobility aid from rolling off the edge closest to the car until the lift is in its fully raised position. Each side of the lift platform which, in its raised position, extends beyond the car shall have a barrier a minimum 1½ inches high. Such barriers shall not interfere with

maneuvering into or out of the car. The loading-edge barrier (outer barrier) which functions as a loading ramp when the lift is at ground or station platform level, shall be sufficient when raised or closed, or a supplementary system shall be provided, to prevent a power wheelchair or mobility aid from riding over or defeating it. The outer barrier of the lift shall automatically rise or close, or a supplementary system shall automatically engage, and remain raised, closed, or engaged at all times that the lift platform is more than 3 inches above the station platform and the lift is occupied. Alternatively, a barrier or system may be raised, lowered, opened, closed, engaged or disengaged by the lift operator provided an interlock or inherent design feature prevents the lift from rising unless the barrier is raised or closed or the supplementary system is engaged.

(6) *Platform surface.* The lift platform surface shall be free of any protrusions over ¼ inch high and shall be slip resistant. The lift platform shall have a minimum clear width of 28½ inches at the platform, a minimum clear width of 30 inches measured from 2 inches above the lift platform surface to 30 inches above the surface, and a minimum clear length of 48 inches measured from 2 inches above the surface of the platform to 30 inches above the surface. (See Fig. 1.)

(7) *Platform gaps.* Any openings between the lift platform surface and the raised barriers shall not exceed ⅝ inch wide. When the lift is at car floor height with the inner barrier (if applicable) down or retracted, gaps between the forward lift platform edge and car floor shall not exceed ½ inch horizontally and ⅝ inch vertically.

(8) *Platform entrance ramp.* The entrance ramp, or loading-edge barrier used as a ramp, shall not exceed a slope of 1:8, when measured on level ground, for a maximum rise of 3 inches, and the transition from station platform to ramp may be vertical without edge treatment up to ¼ inch. Thresholds between ¼ inch and ½ inch high shall be beveled with a slope no greater than 1:2.

(9) *Platform deflection.* The lift platform (not including the entrance ramp) shall not deflect more than 3 degrees (exclusive of car roll) in any direction between its unloaded position and its position when loaded with 600 pounds applied through a 26 inch by 26 inch test pallet at the centroid of the lift platform.

(10) *Platform movement.* No part of the platform shall move at a rate exceeding 6 inches/second during lowering and lifting an occupant, and shall not exceed 12 inches/second during deploying or stowing. This requirement does not apply to the deployment or stowage cycles of lifts that are manually deployed or stowed. The maximum platform horizontal and vertical acceleration when occupied shall be 0.3g.

(11) *Boarding direction.* The lift shall permit both inboard and outboard facing of wheelchairs and mobility aids.

(12) *Use by standees.* Lifts shall accommodate persons using walkers, crutches, canes or braces or who otherwise have difficulty using steps. The lift may be marked to indicate a preferred standing position.

(13) *Handrails.* Platforms on lifts shall be equipped with handrails, on two sides, which move in tandem with the lift, and which shall be graspable and provide support to standees throughout the entire lift operation. Handrails shall have a usable component at least 8 inches long with the lowest portion a minimum 30 inches above the platform and the highest portion a maximum 38 inches above the platform. The handrails shall be capable of withstanding a force of 100 pounds concentrated at any point on the handrail without permanent deformation of the rail or its supporting structure. The handrail shall have a cross-sectional diameter between 1¼ inches and 1½ inches or shall provide an equivalent grasping surface, and have eased edges with corner radii of not less than ⅛ inch. Handrails shall be placed to provide a minimum 1½ inches knuckle clearance from the nearest adjacent surface. Handrails shall not interfere with wheelchair or mobility aid maneuverability when entering or leaving the car.

(c) *Car ramp or bridge plate*—(1) *Design load.* Ramps or bridge plates 30 inches or longer shall support a load of 600 pounds, placed at the centroid of the ramp or bridge plate distributed over an area of 26 inches by 26 inches, with a safety factor of at least 3 based on the ultimate strength of the material. Ramps or bridge plates shorter than 30 inches shall support a load of 300 pounds.

(2) *Ramp surface.* The ramp or bridge plate surface shall be continuous and slip resistant, shall not have protrusions from the surface greater than ¼ inch high, shall have a clear width of 30 inches and shall accommodate both four-wheel and three-wheel mobility aids.

(3) *Ramp threshold.* The transition from station platform to the ramp or bridge plate and the transition from car floor to the ramp or bridge plate may be vertical without edge treatment up to ¼ inch. Changes in level between ¼ inch and ½ inch shall be beveled with a slope no greater than 1:2.

(4) *Ramp barriers.* Each side of the ramp or bridge plate shall have barriers at least 2 inches high to prevent mobility aid wheels from slipping off.

(5) *Slope.* Ramps or bridge plates shall have the least slope practicable. If the height of the vehicle floor, under 50% passenger load, from which the ramp is deployed is 3 inches or less above the station platform a maximum slope of 1:4 is permitted; if the height of the vehicle floor, under 50% passenger load, from which the ramp is deployed is 6 inches or less, but more than 3 inches, above the station platform a maximum slope of 1:6 is permitted; if the height of the vehicle floor, under 50% passenger load, from which the ramp is deployed is 9 inches or less, but more than 6 inches, above the station platform a maximum slope of 1:8 is permitted; if the height of the vehicle floor, under 50% passenger load, from which the ramp is deployed is greater than 9 inches above the station platform a slope of 1:12 shall be achieved. Folding or telescoping ramps are permitted provided they meet all structural requirements of this section.

(6) *Attachment*—(i) *Requirement.* When in use for boarding or alighting, the ramp or bridge plate shall be attached to the vehicle, or otherwise prevented from moving such that it is not subject to displacement when loading or unloading a heavy power mobility aid and that any gaps between vehicle and ramp or bridge plate, and station platform and ramp or bridge plate, shall not exceed ⅝ inch.

(ii) *Exception.* Ramps or bridge plates which are attached to, an deployed from, station platforms are permitted in lieu of car devices provided they meet the displacement requirements of paragraph (c)(6)(i) of this section.

(7) *Stowage.* A compartment, securement system, or other appropriate method shall be provided to ensure that stowed ramps or bridge plates, including portable ramps or bridge plates stowed in the passenger area, do not impinge on a passenger's wheelchair or mobility aid or pose any hazard to passengers in the event of a sudden stop.

(8) *Handrails.* If provided, handrails shall allow persons with disabilities to grasp them from outside the car while starting to board, and to continue to use them throughout the boarding process, and shall have the top between 30 inches and 38 inches above the ramp surface. The handrails shall be capable of withstanding a force of 100 pounds concentrated at any point on the handrail without permanent deformation of the rail or its supporting structure.

The handrail shall have a cross-sectional diameter between 1¼ inches and 1½ inches or shall provide an equivalent grasping surface, and have eased edges with corner radii of not less than ⅛ inch. Handrails shall not interfere with wheelchair or mobility aid maneuverability when entering or leaving the car.

(d) *Seating*—(1) *Requirements*. All intercity rail cars required to be accessible by §§ 38.111 (a) and (e) of this subpart shall provide at least one, but not more than two, mobility aid seating location(s) complying with paragraph (d)(2) of this section; and at least one, but not more than two, seating location(s) complying with paragraph (d)(3) of this section which adjoin or overlap an accessible route with a minimum clear width of 32 inches.

(2) *Wheelchair or mobility aid spaces*. Spaces for persons who wish to remain in their wheelchairs or mobility aids shall have a minimum clear floor area 48 inches by 30 inches. Such space may have fold-down or removable seats for use when not occupied by a wheelchair or mobility aid user. (See Fig. 2.)

(3) *Other spaces*. Spaces for individuals who wish to transfer shall include a regular coach seat or dining car booth or table seat and space to fold and store the passenger's wheelchair.

§ 38.127 Sleeping compartments.

(a) Sleeping compartments required to be accessible shall be designed so as to allow a person using a wheelchair or mobility aid to enter, maneuver within and approach and use each element within such compartment. (See Fig. 5.)

(b) Each accessible compartment shall contain a restroom complying with § 38.123(a) which can be entered directly from such compartment.

(c) Controls and operating mechanisms (e.g., heating and air conditioning controls, lighting controls, call buttons, electrical outlets, etc.) shall be mounted no more than 48 inches, and no less than 15 inches, above the floor and shall have a clear floor area directly in front a minimum of 30 inches by 48 inches. Controls and operating mechanisms shall be operable with one hand and shall not require tight grasping, pinching, or twisting of the wrist.

Subpart G—Over-the-Road Buses and Systems

§ 38.151 General.

(a) New, used and remanufactured over-the-road buses, to be considered accessible by regulations in part 37 of this title, shall comply with this subpart.

(b) Over-the-road buses covered by § 37.7 (c) of this title shall comply with § 38.23 and this subpart.

§ 38.153 Doors, steps and thresholds.

(a) Floor surfaces on aisles, step treads and areas where wheelchair and mobility aid users are to be accommodated shall be slip-resistant.

(b) All step edges shall have a band of color(s) running the full width of the step which contrasts from the step tread and riser, either dark-on-light or light-on-dark.

(c) To the maximum extent practicable, doors shall have a minimum clear width when open of 30 inches, but in no case less than 27 inches.

§ 38.155 Interior circulation, handrails and stanchions.

(a) Handrails and stanchions shall be provided in the entrance to the vehicle in a configuration which allows passengers to grasp such assists from outside the vehicle while starting to board, and to continue using such handrails or stanchions throughout the boarding process. Handrails shall have a cross-sectional diameter between 1¼ inches and 1½ inches or shall provide an equivalent grasping surface, and have eased edges with vcorner radii of not less than ⅛ inch. Handrails shall be placed to provide a minimum 1½ inches knuckle clearance from the nearest adjacent surface. Where on-board fare collection devices are used, a horizontal passenger assist shall be located between boarding passengers and the fare collection device and shall prevent passengers from sustaining injuries on the fare collection device or windshield in the event of a sudden deceleration. Without restricting the vestibule space, the assist shall provide support for a boarding passenger from the door through the boarding procedure. Passengers shall be able to lean against the assist for security while paying fares.

(b) Where provided within passenger compartments, handrails or stanchions shall be sufficient to permit safe on-board circulation, seating and standing assistance, and alighting by persons with disabilities.

§ 38.157 Lighting.

(a) Any stepwell or doorway immediately adjacent to the driver shall have, when the door is open, at least 2 foot-candles of illumination measured on the step tread.

(b) The vehicle doorway shall have outside light(s) which, when the door is open, provide at least 1 foot-candle of illumination on the street surface for a distance of 3 feet perpendicular to all points on the bottom step tread outer edge. Such light(s) shall be located below window level and shielded to protect the eyes of entering and exiting passengers.

§ 38.159 Mobility aid accessibility. [Reserved]

Subpart H—Other Vehicles and Systems

§ 38.171 General.

(a) New, used and remanufactured vehicles and conveyances for systems not covered by other subparts of this part, to be considered accessible by regulations in part 37 of this title shall comply with this subpart.

(b) If portions of the vehicle or conveyance are modified in a way that affects or could affect accessibility, each such portion shall comply, to the extent practicable, with the applicable provisions of this subpart. This provision does not require that inaccessible vehicles be retrofitted with lifts, ramps or other boarding devices.

(c) Requirements for vehicles and systems not covered by this part shall be determined on a case-by-case basis by the Department of Transportation in consultation with the U.S. Architectural and Transportation Barriers Compliance Board (Access Board).

§ 38.173 Automated guideway transit vehicles and systems.

(a) Automated Guideway Transit (AGT) vehicles and systems, sometimes called "people movers", operated in airports and other areas where AGT vehicles travel at slow speed, shall comply with the provisions of § 38.53 (a) through (c), and §§ 38.55 through 38.61 of this part for rapid rail vehicles and systems.

(b) Where the vehicle covered by paragraph (a) will operate in an accessible station, the design of vehicles shall be coordinated with the boarding platform design such that the horizontal gap between a vehicle door at rest and the platform shall be no greater than 1 inch and the height of the vehicle floor shall be within plus or minus ½ inch of the platform height under all normal passenger load conditions. Vertical alignment may be accomplished by vehicle air suspension or other suitable means of meeting the requirement.

(c) In stations where open platforms are not protected by platform screens, a suitable device or system shall be provided to prevent, deter or warn individuals from stepping off the platform between cars. Acceptable devices include, but are not limited to,

pantograph gates, chains, motion detectors or other appropriate devices.

(d) Light rail and rapid rail AGT vehicles and systems shall comply with subparts D and C of this part, respectively.

§ 38.175 High-speed rail cars, monorails and systems.

(a) All cars for high-speed rail systems, including but not limited to those using "maglev" or high speed steel-wheel-on-steel rail technology, and monorail systems operating primarily on dedicated rail (i.e., not used by freight trains) or guideway, in which stations are constructed in accordance with Part 37, Subpart C of this title, shall be designed for high-platform, level boarding and shall comply with § 38.111(a) of this part for each type of car which is similar to intercity rail, §§ 38.111(d), 38.113 (a) through (c) and (e), 38.115 (a) and (b), 38.117 (a) and (b), 38.121 through 38.123, 38.125(d), and 38.127 (if applicable) of this part. The design of cars shall be coordinated with the boarding platform design such that the horizontal gap between a car door at rest and the platform shall be no greater than 3 inches and the height of the car floor shall be within plus or minus ⅝ inch of the platform height under all normal passenger load conditions. Vertical alignment may be accomplished by car air suspension or other suitable means of meeting the requirement. All doorways shall have, when the door is open, at least 2 footcandles of illumination measured on the door threshold.

(b) All other high-speed rail cars shall comply with the similar provisions of subpart F of this part.

§ 38.177 Ferries, excursion boats and other vessels. [Reserved]

§ 38.179 Trams, and similar vehicles, and systems

(a) New and used trams consisting of a tractor unit, with or without passenger accommodations, and one or more passenger trailer units, including but not limited to vehicles providing shuttle service to remote parking areas, between hotels and other public accommodations, and between and within amusement parks and other recreation areas, shall comply with this section. For purposes of determining applicability of 49 CFR 37.101, 37.103, or 37.105 the capacity of such a vehicle or "train" shall consist of the total combined seating capacity of all units, plus the driver, prior to any modification for accessibility.

(b) Each tractor unit which accommodates passengers and each trailer unit shall comply with § 38.25 and § 38.29 of this part. In addition, each such unit shall comply with § 38.23 (b) or (c) and shall provide at least one space for wheelchair or mobility aid users complying with § 38.23(d) of this part unless the complete operating unit consisting of tractor and one or more trailers can already accommodate at least two wheelchair or mobility aid users.

Figures in Part 38

BILLING CODE 4910-62-M

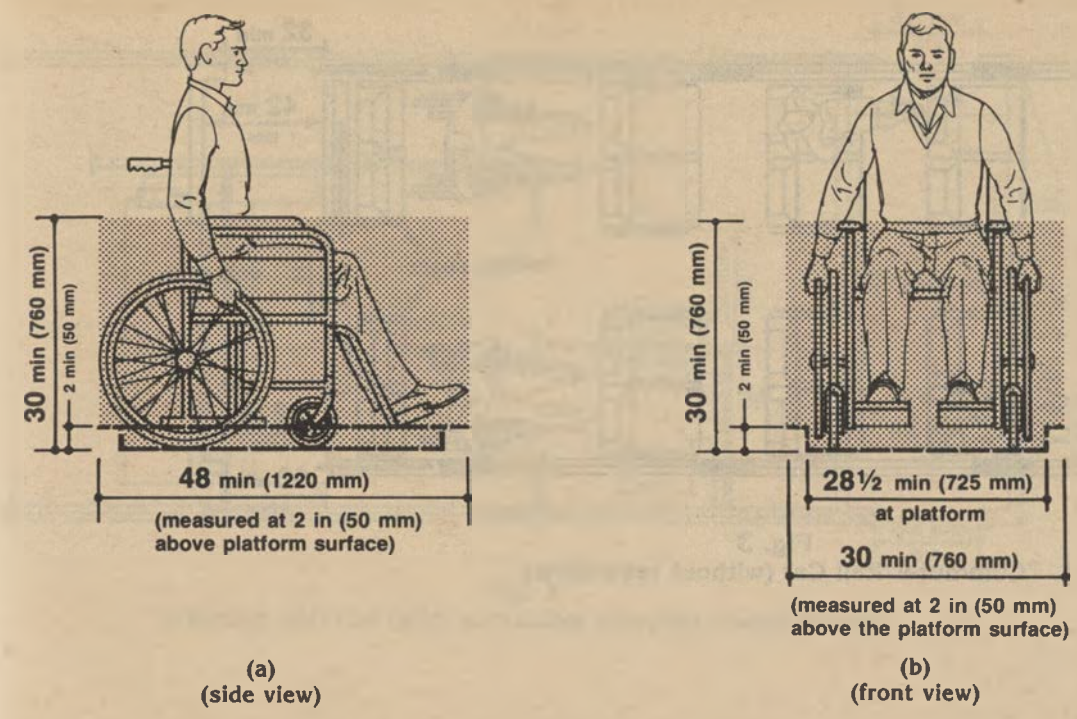

Fig. 1
Wheelchair or Mobility Aid Envelope

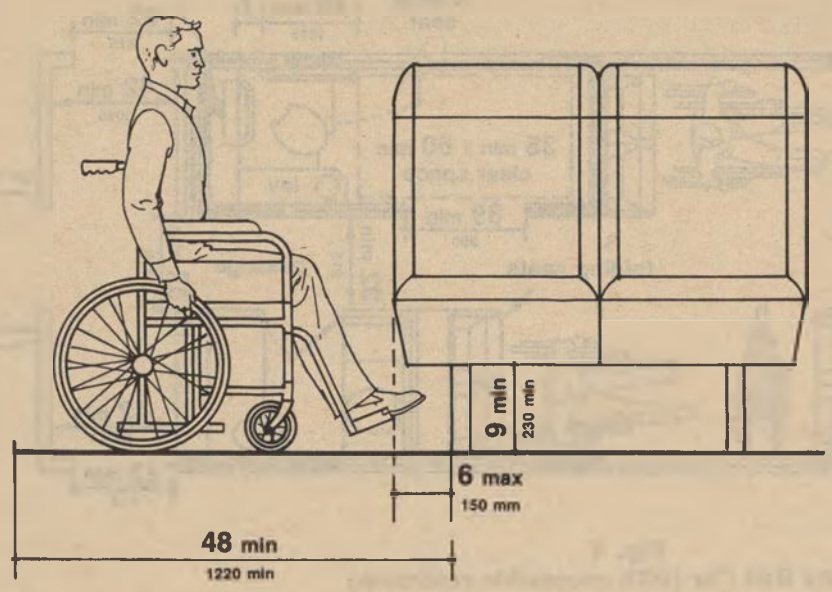

Fig. 2
Toe Clearance Under a Seat

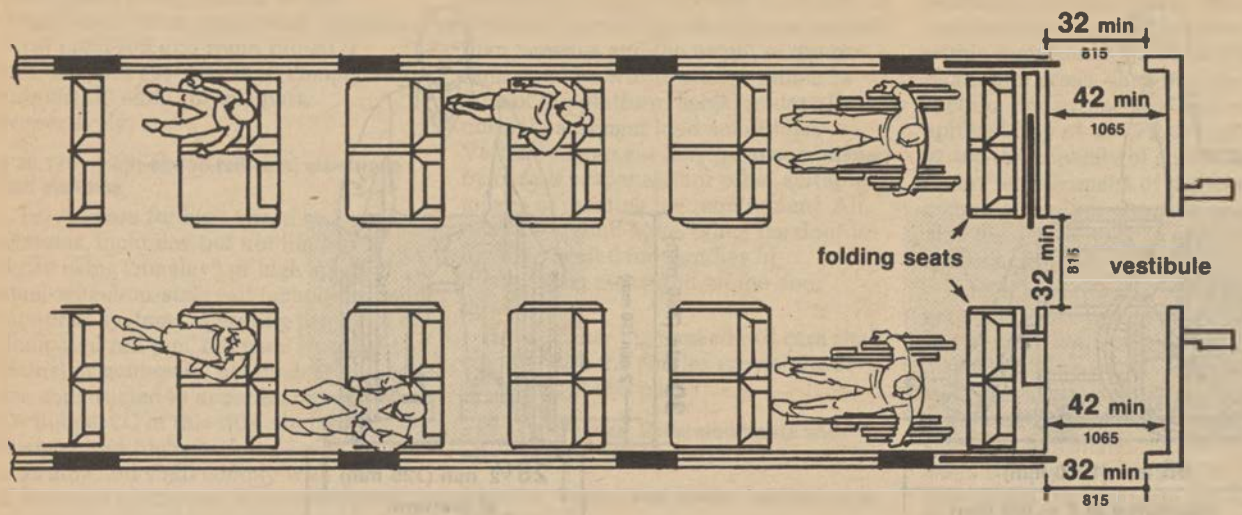

Fig. 3
Commuter Rail Car (without restrooms)

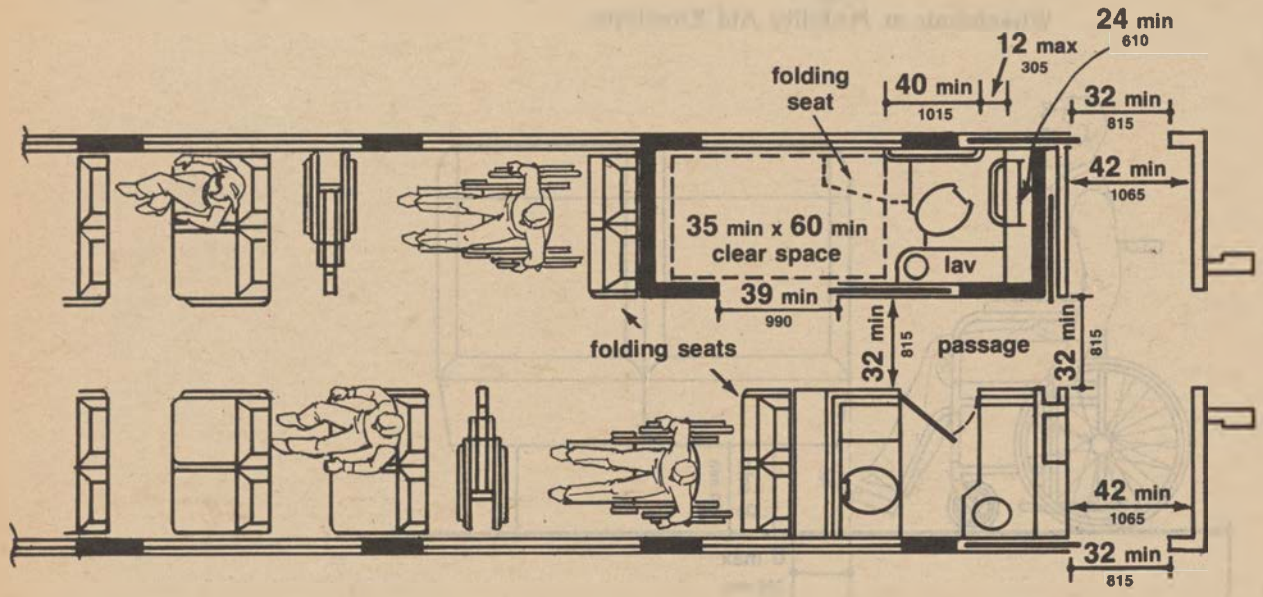

Fig. 4
Intercity Rail Car (with accessible restroom)

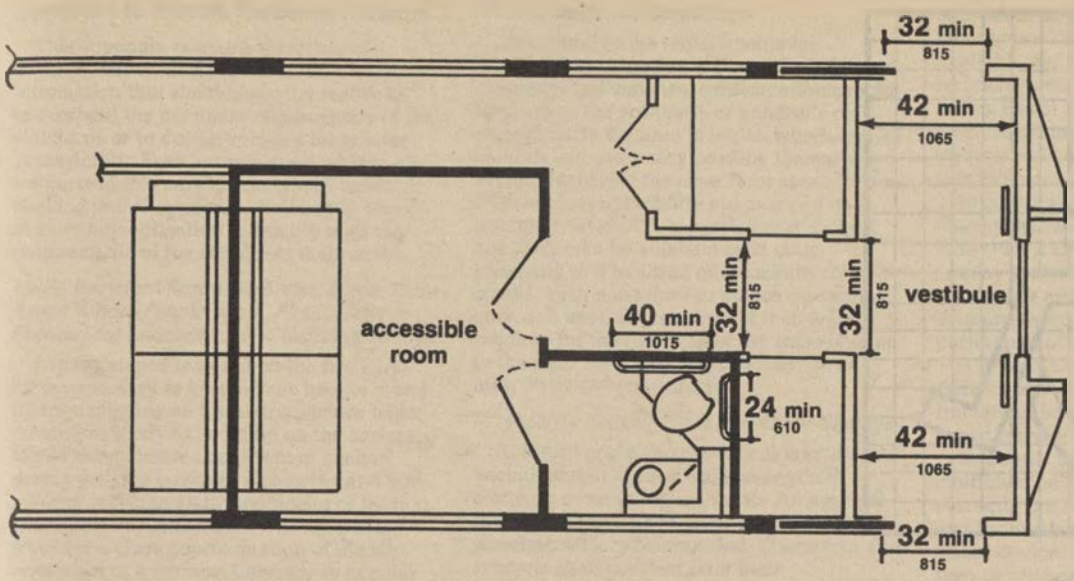

Fig. 5
Intercity Rail Car (with accessible sleeping compartment)

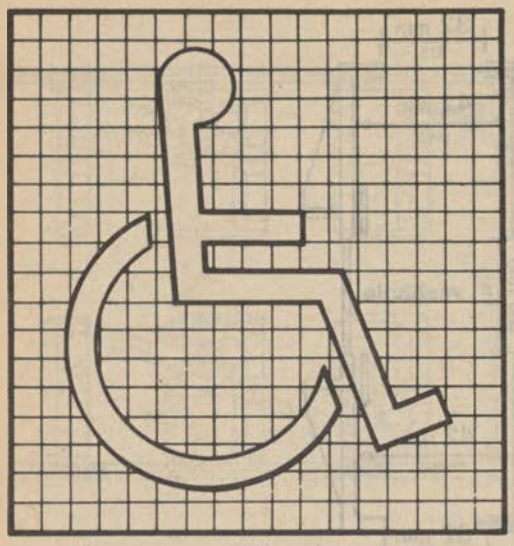

(a)
Proportions

(b)
Display Conditions

Fig. 6
International Symbol of Accessibility

BILLING CODE 4910-62-C

Appendix to Part 38: Guidance Material

This appendix contains materials of a advisory nature and provides additional information that should help the reader to understand the minimum requirements of the standards or to design vehicles for greater accessibility. Each entry is applicable to all subparts of this part except where noted. Nothing in this appendix shall in any way obviate any obligation to comply with the requirements of the standards themselves.

I. Slip Resistant Surface—Aisles, Steps, Floor Areas Where People Walk, Floor Areas in Securement Locations, Lift Platforms, Ramps

Slip resistance is based on the frictional force necessary to keep a shoe heel or crutch tip from slipping on a walking surface under conditions likely to be found on the surface. While the dynamic coefficient of friction during walking varies in a complex and non-uniform way, the static coefficient of friction, which can be measured in several ways, provides a close approximation of the slip resistance of a surface. Contrary to popular belief, some slippage is necessary to walking, especially for persons with restricted gaits; a truly "non-slip" surface could not be negotiated.

The Occupational Safety and Health Administration recommends that walking surfaces have a static coefficient of friction of 0.5. A research project sponsored by the Architectural and Transportation Barriers Compliance Board (Access Board) conducted tests with persons with disabilities and concluded that a higher coefficient of friction was needed by such persons. A static coefficient of friction of 0.6 is recommended for steps, floors, and lift platforms and 0.8 for ramps.

It is recognized that the coefficient of friction varies considerably due to the presence of contaminants, water, floor finishes, and other factors not under the control of transit providers and may be difficult to measure. Nevertheless, many common materials suitable for flooring are now labeled with information on the static coefficient of friction. While it may not be possible to compare one product directly with another, or to guarantee a constant measure, transit operators or vehicle designers and manufacturers are encouraged to specify materials with appropriate values. As more products include information on slip resistance, improved uniformity in measurement and specification is likely. The Access Board's advisory guidelines on Slip Resistant Surfaces provides additional information on this subject.

II. Color Contrast—Step Edges, Lift Platform Edges

The material used to provide contrast should contrast by at least 70%. Contrast in percent is determined by:

$$\text{Contrast} = [B - B)/B] \times 100$$

Where B = light reflectance value (LRV) of the lighter area

and B = light reflectance value (LRV) of the darker area.

Note that in any application both white and black are never absolute; thus, B never equals 100 and B is always greater than 0.

III. Handrails and Stanchions

In addition to the requirements for handrails and stanchions for rapid, light, and commuter rail vehicles, consideration should be given to the proximity of handrails or stanchions to the area in which wheelchair or mobility aid users may position themselves. When identifying the clear floor space where a wheelchair or mobility aid user can be accommodated, it is suggested that at least one such area be adjacent or in close proximity to a handrail or stanchion. Of course, such a handrail or stanchion cannot encroach upon the required 32 inch width required for the doorway or the route leading to the clear floor space which must be at least 30 by 48 inches in size.

IV. Priority Seating Signs and Other Signage

A. *Finish and Contrast.* The characters and background of signs should be eggshell, matte, or other non-glare finish. An eggshell finish (11 to 19 degree gloss on 60 degree glossimeter) is recommended. Characters and symbols shall contrast with their background—either light characters on a dark background or dark characters on a light background. Research indicates that signs are more legible for persons with low vision when characters contrast with their background by at least 70 percent. Contrast in percent shall be determined by:

$$\text{Contrast} = [B - B)/B] \times 100$$

Where B = light reflectance value (LRV) of the lighter area

and B = light reflectance value (LRV) of the darker area.

Note that in any application both white and black are never absolute; thus, B never equals 100 and B is always greater than 0.

The greatest readability is usually achieved through the use of light-colored characters or symbols on a dark background.

B. *Destination and Route Signs.* (The following specifications, which are required for buses (§ 38.39), are recommended for other types of vehicles, particularly light rail vehicles, were appropriate.)

1. Where destination or route information is displayed on the exterior of a vehicle, each vehicle shall have illuminated signs on the front and boarding side of the vehicle.

2. Characters on signs required by paragraph IV.B.1 of this appendix shall have a width-to-height ratio between 3:5 and 1:1 and a stroke width-to-height ratio between 1:5 and 1:10, with a minimum character height (using an upper case "X") of 1 inch for signs on the boarding side and a minimum character height of 2 inches for front "headsigns," with "wide" spacing (generally, the space between letters shall be 1/16 the height of upper case letters), and shall contrast with the background, either dark-on-light or light-on-dark, or as recommended above.

C. *Designation of Accessible Vehicles.* The International Symbol of Accessibility should be displayed as shown in Figure 6.

V. Public Information Systems

This section has been reserved and there currently is no requirement that vehicles be equipped with an information system which is capable of providing the same or equivalent information to persons with hearing loss. While the Department assesses available and soon-to-be available technology during a study to be conducted during Fiscal Year 1992, entities are encouraged to employ whatever services, signage or alternative systems or devices that provide equivalent access and are available. Two possible types of devices are visual display systems and listening systems. However, it should be noted that while visual display systems accommodate persons who are deaf or are hearing impaired, assistive listening systems aid only those with a partial loss of hearing.

A. *Visual Display Systems.* Announcements may be provided in a visual format by the use of electronic message boards or video monitors.

Electronic message boards using a light emitting diode (LED) or "flip-dot" display are currently provided in some transit stations and terminals and may be usable in vehicles. These devices may be used to provide real time or pre-programmed messages; however, real time message displays require the availability of an employee for keyboard entry of the information to be announced.

Video monitor systems, such as visual paging systems provided in some airports (e.g., Baltimore-Washington International Airport), are another alternative. The Architectural and Transportation Barriers Compliance Board (Access Board) can provide technical assistance and information on these systems ("Airport TDD Access: Two Case Studies," (1990)).

B. *Assistive Listening Systems.* Assistive listening systems (ALS) are intended to augment standard public address and audio systems by providing signals which can be received directly by persons with special receivers or their own hearing aids and which eliminate or filter background noise. Magnetic induction loops, infra-red and radio frequency systems are types of listening systems which are appropriate for various applications.

An assistive listening system appropriate for transit vehicles, where a group of persons or where the specific individuals are not known in advance, may be different from the system appropriate for a particular individual provided as an auxiliary aid or as part of a reasonable accommodation. The appropriate device for an individual is the type that individual can use, whereas the appropriate system for a station or vehicle will necessarily be geared toward the "average" or aggregate needs of various individuals. Earphone jacks with variable volume controls can benefit only people who have slight hearing loss and do not help people who use hearing aids. At the present time, magnetic induction loops are the most feasible type of listening system for people who use hearing aids equipped with "T-coils", but people without hearing aids or those with hearing aids not equipped with inductive pick-ups cannot use them without special receivers. Radio frequency systems can be extremely effective and inexpensive. People without hearing aids can use them, but people with hearing aids need a special receiver to use them as they are presently

designed. If hearing aids had a jack to allow a by-pass of microphones, then radio frequency systems would be suitable for people with and without hearing aids. Some listening systems may be subject to interference from other equipment and feedback from hearing aids of people who are using the systems. Such interference can be controlled by careful engineering design that anticipates feedback sources in the surrounding area.

The Architectural and Transportation Barriers Compliance Board (Access Board) has published a pamphlet on Assistive Listening Systems which lists demonstration centers across the country where technical assistance can be obtained in selecting and installing appropriate systems. The State of New York has also adopted a detailed technical specification which may be useful.

[FR Doc. 91-20846 Filed 9-5-91; 8:45 am]

BILLING CODE 4910-62-M

federal register

Friday
September 6 1991

Part V

Department of the Interior

Office of Surface Mining Reclamation and Enforcement

30 CFR Parts 701, 773, 778, 840, and 843

Use of the Applicant/Violator Computer Systems (AVS) in Surface Coal Mining and Reclamation Permit Approval; Proposed Rule

DEPARTMENT OF THE INTERIOR

Office of Surface Mining Reclamation and Enforcement

30 CFR Parts 701, 773, 778, 840, and 843

RIN 1029-AB34

Use of the Applicant/Violator Computer System (AVS) in Surface Coal Mining and Reclamation Permit Approval; Standards and Procedures for Ownership and Control Determinations; Sanctions for Knowing Omissions and Inaccuracies in Ownership and Control Information

AGENCY: Office of Surface Mining Reclamation and Enforcement, Interior.

ACTION: Proposed rule.

SUMMARY: The Office of Surface Mining Reclamation and Enforcement (OSM) proposes to establish new regulations to require regulatory authorities to use OSM's Applicant/Violator Computer System (AVS) and other information sources to identify ownership or control links between permit applicants and violators.

The regulations would establish the procedures, standards, and type of proof required to challenge ownership or control links and to disprove violations and include sanctions for a permit applicant's knowing submission of inaccurate or incomplete ownership and control information.

OSM also proposes to amend a number of current regulations affecting blocking of permits, abatement of notices of violation, improvidently issued permits, and permit application information.

The proposed regulations will provide necessary guidance to the regulated community and will enhance compliance with the provisions of section 510(c) of the Surface Mining Control and Reclamation Act of 1977 (SMCRA or the Act) and the provisions of 30 CFR 773.15(b), 30 CFR 773.20, and 30 CFR 773.21. Such proposals will reduce the possibility of violators receiving and retaining permits in violation of the permit approval provisions of SMCRA.

DATES: *Written comments:* OSM will accept written comments on the proposed rule until 5 p.m. Eastern time on October 21, 1991.

Public hearings: Upon request, OSM will hold public hearings on the proposed rule in Washington, DC, on a date and at a time that would be subsequently announced. Upon request, OSM will also hold public hearings in the States of California, Georgia, Idaho, Massachusetts, Michigan, North Carolina, Oregon, Rhode Island, South Dakota, Tennessee, and Washington at times and dates to be announced prior to any requested hearings. OSM will accept requests for public hearings until 5 p.m. Eastern time on September 27, 1991. Individuals wishing to attend, but not testify, at any hearing should contact the person identified under "**FOR FURTHER INFORMATION CONTACT**" beforehand to verify that the hearing will be held.

ADDRESSES: *Written comments:* Hand deliver to the Office of Surface Mining Reclamation and Enforcement, Administrative Record, room 5131, 1100 L Street NW., Washington, DC; or mail to the Office of Surface Mining Reclamation and Enforcement, Administrative Record, room 5131-L, 1951 Constitution Avenue NW., Washington, DC 20240.

Public hearings: The addresses for any hearings scheduled in the States of California, Georgia, Idaho, Massachusetts, Michigan, North Carolina, Oregon, Rhode Island, South Dakota, Tennessee, Washington, and the District of Columbia will be announced prior to the hearings.

Request for public hearings: Submit request orally or in writing to the person and address specified under "**FOR FURTHER INFORMATION CONTACT.**"

FOR FURTHER INFORMATION CONTACT: Dr. Annetta Cheek, Office of Surface Mining Reclamation and Enforcement, U.S. Department of the Interior, 1849 C Street NW., Washington, DC 20240. Telephone: 202-208-4421 (Commercial) or 268-4421 (FTS).

SUPPLEMENTARY INFORMATION:

I. Public Comment Procedures
II. Background
III. Discussion of the Proposed Rules
A. Section 701.5—Definitions
B. Part 773—Table of Contents
C. Section 773.5—Definitions
D. Section 773.10—Information Collection
E. Section 773.15—Review of permit applications
F. Section 773.20—Improvidently issued permits: General Procedures
G. Section 773.21—Improvidently issued permits: Rescission procedures
H. Section 773.22—Verification of ownership or control application information
I. Section 773.23—Review of ownership or control and violation information
J. Section 773.24—Procedures for challenging ownership or control links shown in AVS
K. Section 773.25—Procedures for challenging ownership or control links prior to entry in AVS
L. Section 773.26—Standards for challenging ownership or control links and the status of violations
M. Section 773.27—Periodic check of ownership and control information
N. Section 778.13—Identification of interests
O. Section 778.14—Violation information
P. Section 840.13—Enforcement authority
Q. Part 843—Table of Contents
R. Section 843.10—Information collection
S. Section 843.23—Sanctions for knowing omissions or inaccuracies in ownership or control and violation information.
T. Section 843.24—Oversight of State permitting decisions with respect to ownership or control or the status of violations
IV. Procedural Matters

I. Public Comment Procedures

Written Comments

Written comments submitted on the proposed rule should be specific, should be confined to issues pertinent to the proposed rule, and should explain the reason for any recommended change. Where practical, commenters should submit three copies of their comments. Comments received after the close of the comment period (see "**DATES**") or delivered to addresses other than those listed above (see "**ADDRESSES**"), may not be considered or included in the Administrative Record for the final rule.

Public Hearings

OSM will hold public hearings on the proposed rule on request only. The times, dates, and addresses for all hearings will be announced in the **Federal Register** at least 7 days prior to any hearings which are to be held.

Any person interested in participating at a hearing at a particular location should inform Dr. Cheek (see "**FOR FURTHER INFORMATION CONTACT**") either orally or in writing of the desired hearing location by 5 p.m. Eastern time September 27, 1991. If no one has contacted Dr. Cheek to express an interest in participating in a hearing at a given location by that date, the hearing will not be held. If only one person expresses an interest, a public meeting rather than a hearing may be held and the results will be included in the Administrative Record.

If a hearing is held, it will continue until all persons wishing to testify have been heard. To assist the transcriber and ensure an accurate record, OSM requests that persons who testify at a hearing provide the transcriber a written copy of their testimony. To assist OSM in preparing appropriate questions, OSM also requests that persons who plan to testify submit to OSM at the address previously specified for the submission of written comments (see "**ADDRESSES**") an advance copy of their testimony.

II. Background

Section 510(c) of SMCRA and existing 30 CFR part 773 establish certain requirements for permits and permit processing. These requirements include the determination of ownership or control links between permit applicants and individuals or entities who are responsible for unabated violations of Federal or State laws and rules. See 30 CFR 773.5; 30 CFR 773.15(b). The purpose of such inquiry is to determine whether a permit applicant is linked to unabated violations. See 30 CFR 773.15(b). In the event that a permit applicant is so linked, the regulatory authority may not issue a permit to the applicant unless the applicant submits proof that the violation has been or is in the process of being corrected to the satisfaction of the agency that has jurisdiction over the violation. In the alternative, the applicant may establish that the violation is the subject of a good faith, direct, administrative or judicial appeal which contests the validity of the violation. *Id.* In the event that a permit applicant is so linked and proof of the violation's correction or good faith appeal is not submitted, issuance of a permit to the applicant may constitute improvident issuance and may subject the permittee to certain remedial measures including suspension or rescission of the permit. See 30 CFR 773.20 and 30 CFR 773.21.

Under a court order in the case of *Save Our Cumberland Mountains, Inc. et al.* v. *Clark*, No. 81-2134 (D.D.C. January 31, 1985) (Parker, J.), the Secretary of the Interior was required to improve the enforcement and implementation of Section 510(c) of SMCRA, and to establish a computerized Applicant/Violator System ("AVS") to match permit applicants and their owners and controllers with current violators of SMCRA. OSM has developed such a computer system to enable OSM and State regulatory authorities to comply effectively with the responsibilities prescribed by section 510(c) of SMCRA and 30 CFR Part 773.

On January 24, 1990, OSM and DOI entered into a Settlement Agreement to resolve this litigation with Save Our Cumberland Mountains ("SOCM") and other plaintiffs. The Settlement Agreement was approved by the U.S. District Court on September 5, 1990, and became effective, by its own terms, on that date. See Memorandum of the Court, *Save Our Cumberland Mountains, Inc., et al.*, v. *Lujan*, No. 81-2134 (D.D.C. September 5, 1990). Pursuant to the Settlement Agreement, OSM agreed to propose rules of the type proposed today.

The purpose of these proposed rules is to require that, prior to issuing permits to applicants, regulatory authorities consider complete ownership and control information in conducting the analysis mandated by section 510(c) of SMCRA and 30 CFR 773.15(b). The proposed rules would mandate the use of AVS as a critical component of the ownership and control information consideration process. The proposed rules would establish the sanctions to be applied for failures of compliance with these rules.

The AVS does not create presumptions of ownership and control or links to violations. On the contrary, such presumptions and links are created by the application of SMCRA and current regulations to the available facts. See Preamble to Requirements for Surface Coal Mining and Reclamation Permit Approval; Ownership and Control; Final Rule, 53 FR 38863 *et seq.* (October 3, 1988); 30 CFR 773.5 and 30 CFR 773.15(b). The AVS is a convenient, centralized means of recording and reporting such presumptions and links to regulatory authorities throughout the country to provide a shared information base for permit decisionmaking.

As stated above, the proposed rules also represent OSM's fulfillment of its commitments made under the Settlement Agreement with SOCM. Nevertheless, it must be emphasized that OSM independently believes that the proposal and public consideration of such rules are important to assist OSM in implementing its duties under section 510(c) of SMCRA and duties imposed by regulations such as 30 CFR 773.15. The proposed rules should be viewed as proposals that OSM would have made regardless of any litigation or settlement.

At the same time, OSM emphasizes that it is in no way committed to the ultimate adoption of any proposed rules. OSM expects that there will be substantial comments by the regulated community and the public in response to the rules proposed today. OSM intends to fully consider such comments and evaluate the proposed rules in light of such comments and the requirements of SMCRA.

III. Discussion of the Proposed Rules

In substance, the proposed rules would require regulatory authorities to use AVS and other computerized and manual information sources at their disposal when making decisions whether to grant or deny permits. The proposed rules would, if adopted, help provide additional assurance that ownership, control, and violation information is adequately reviewed in the permitting process.

The proposed rules would aid in the implementation of the substantive ownership and control standards which are currently operative in Federal regulations. See 30 CFR 773.5. Such standards are already part of State programs or will become part of State programs without regard to whether these proposed rules are adopted.

Further, the proposed rules represent an important application of computer information technology to protect the mining industry, the environment and the public against operators who commit violations of the Act or fail to pay penalties as a result of their operations and who then attempt to seek new permits to engage in mining operations. The proposed rules would help to identify those parties who are responsible for mining and mining violations and would help to assure that responsibilities assumed by mining entities are fulfilled before such entities can obtain new permits. Under the proposed rules, information would be recorded, pooled, and readily accessible to all State regulatory authorities.

The heart of the proposed rules is the regulatory authority's use of AVS. Accordingly, the rules would mandate that the regulatory authority use this system prior to making permitting decisions. Additionally, the proposed rules would (1) establish methods, procedures, and standards for challenging ownership and control information shown in AVS and prior to entry of such information into AVS; (2) provide a means, under certain circumstances, for challengers of ownership or control links to secure temporary relief from permit blocking during the pendency of their challenges; (3) clarify OSM's oversight authority to review the compliance of regulatory authorities with the proposed rules; and (4) impose certain follow-up duties upon a regulatory authority once a permitting decision has been made.

OSM also proposes to amend its current rules in a number of respects. The definition of "violation notice" would be removed from the current regulations at 30 CFR 701.5 and transferred in amended form to 30 CFR 773.5. As discussed above, other amendments to current regulations would include the deletion of the presumption contained in 30 CFR 773.15(b) that a notice of violation is in the process of being abated in the absence of a failure to abate cessation order.

Current regulations governing improvidently issued permits at 30 CFR 773.20 and 30 CFR 773.21 would also be amended. Such proposed amendments would provide for prior notice and appeals of both permit suspensions and rescissions. The proposed amendments would provide for temporary relief, under certain circumstances, during the pendency of such appeals. Further, the standards and procedures of the proposed AVS rules would be applicable to the rules governing improvidently issued permits.

Current regulations at 30 CFR 778.13 and 778.14 which govern the contents of permit application information would be also amended to include the identification of deemed or presumed ownership or control interests and to include the reporting of violation notices for surface coal mining operations which are deemed or presumed to be owned or controlled by the applicant. The current regulation at 30 CFR 840.13 would be amended to require that State enforcement programs be no less effective than OSM's proposed sanctions for a permit applicant's knowing submission of inaccurate or incomplete ownership and control information.

OSM also proposes to revise certain regulations to reflect the information collection impact of the proposed AVS related regulations.

This preamble will discuss proposed regulations in numerical order by section. Thus, there will first be a brief discussion of the proposed definition changes in current regulations contained at 30 CFR 701.5 and 30 CFR 773.5. The preamble then contains a discussion of proposed changes to current information collection regulations at 30 CFR 773.10. Then, there will be a brief discussion of proposed changes to current regulations at 30 CFR 773.20 and 30 CFR 773.21, relating to improvidently issued permits. A detailed discussion of the proposed new rules relating to AVS and permit decisions will follow. Then, there will be a discussion of amendments to the current inspection and enforcement regulation at 30 CFR 840.13. The preamble will next discuss the rationale for the proposed deletion of the current information collection regulation at 30 CFR 843.10. The preamble will conclude with a discussion of proposed regulations relating to Federal enforcement and oversight.

As used throughout the proposed rules and this preamble, the term "person" includes one or more individuals, partnerships, corporations, or other business entities. See section 701(19) of SMCRA; 30 CFR 700.5.

A. Section 701.5—Definitions

OSM proposes to delete the definition of *violation notice* contained in the current regulations and to transfer such definition in expanded form to § 773.5. The expanded definition, as described below, would refer to the types of violations of the Act or other laws which would form the basis for a regulatory authority to deny a permit application under the provisions of § 773.15(b).

B. Part 773—Table of Contents

OSM proposes to amend the Table of Contents of 30 CFR part 773 to add, in numerical order, the proposed AVS regulations. The proposed additions would include § 773.22, Verification of ownership or control application information; § 773.23, Review of ownership or control and violation information; § 773.24, Procedures for challenging ownership or control links shown in AVS; § 773.25, Procedures for challenging ownership or control links prior to entry in AVS; § 773.26, Standards for challenging ownership or control links and the status of violations; and § 773.27, Periodic check of ownership or control information.

C. Section 773.5—Definitions

The proposed rule would add certain definitions to current § 773.5. Such additional proposed definitions are necessary to an understanding of the comprehensive regulations relating to the implementation of AVS which OSM is proposing today.

The proposed additional definitions include the terms *Applicant/Violator Computer System, AVS, Federal violation notice, Ownership or control link, State violation notice,* and *Violation notice.*

The terms *Applicant/Violator Computer System* or *AVS* would be defined to mean the computer system maintained by OSM to identify ownership or control links involving permit applicants, permittees, and persons cited in violation notices.

A *Federal violation notice* would be defined to include a violation notice issued by OSM or by another agency or instrumentality of the United States.

An *ownership or control link* would be defined as any relationship included in the definition of *owned or controlled* or *owns or controls* in 30 CFR 773.5 or in the violations review provisions of 30 CFR 773.15(b). It would include any relationship presumed to constitute ownership or control under 30 CFR 773.5(b) unless such presumption has been successfully rebutted under §§ 773.24 and 773.26 or §§ 773.25 and 773.26 of this proposed rule or under the provisions of 30 CFR part 775 and § 773.26 of this proposed rule. It would also include an identity between persons, e.g., an applicant and a violator.

A *State violation notice* would be defined as a violation notice issued by a State regulatory authority or by another agency or instrumentality of State government.

Violation notice would be defined as any written notification from any governmental entity advising of violations of the Act or any other laws which would form the basis for a regulatory authority to deny issuance of a permit in accordance with the criteria contained in § 773.15(b) of the regulations. The type of written notification would continue to be broadly defined to include a letter, memorandum, legal or administrative pleading, or other written communication. Consistent with the provisions of current § 773.15(b), the term would include notification of a violation of the Act, any Federal rule or regulation promulgated pursuant thereto, a State program, or any Federal or State law, rule, or regulation pertaining to air or water environmental protection in connection with a surface coal mining operation. It would include, but not be limited to, a notice of violation; an imminent harm cessation order; a failure-to-abate cessation order; a final order, bill, or demand letter pertaining to a delinquent civil penalty; a bill or demand letter pertaining to delinquent abandoned mine reclamation fees; and a notice of bond forfeiture, where one or more violations upon which the forfeiture was based have not been corrected.

D. Section 773.10—Information Collection

The proposed rule would revise existing § 773.10 which contains a list of the existing information collection requirements in part 773 and also the OMB clearance number indicating OMB approval of the information collection requirements. The proposed revision would update § 773.10 by including the new sections of the proposed AVS-related rules containing information collection requirements. The proposed revision would provide an estimate of the average public reporting burden per response for the collection of information under part 773 as such part would be revised by the proposed rules. The section would also list the addresses for OSM and OMB where comments on the information collection requirements may be sent.

E. Section 773.15—Review of Permit Applications

The proposed amendment to 30 CFR 773.15(b)(1) would refer to relevant proposed amended definitions and proposed AVS-related rules as the basis for a regulatory authority's analysis when reviewing a permit. The proposed amendment would further provide that delinquent civil penalties for violations cited prior to October 3, 1988, would not form the basis for a permit block against persons linked through ownership or control to such violations, where reclamation has been completed in accordance with the provisions of the applicable regulatory program and where, with respect to each cessation order for which a delinquent civil penalty exists, such persons have paid $750 of the amount of such penalty to the regulatory authority which issued such cessation order.

The proposed amendment to the regulation would require the regulatory authority to review all reasonably available information concerning violation notices and ownership or control links involving the applicant. Such information would include that obtained pursuant to proposed § 773.22 (Verification of ownership or control application information); proposed § 773.23 (Review of ownership or control and violation information); proposed amended § 778.13 (Identification of interests); and proposed amended § 778.14 (Violation information).

While these proposed regulations and proposed amended regulations are discussed in further detail below, the net effect of referencing such provisions in § 773.15(b)(1) would be to assure that the regulatory authority makes a decision with respect to permit issuance or denial based upon complete information relating to ownership, control, and violations. Such complete information would include the mandated use of AVS.

Furthermore, in accordance with proposed § 773.23, the regulatory authority would follow the procedures and standards set forth in proposed §§ 773.24 and 773.26 in deciding whether to issue the permit under § 773.15(b).

The proposed amendments to 30 CFR 773.15(b)(1) would also delete the presumption contained in the current version of that rule that allows a regulatory authority, in evaluating whether a surface coal mining operation owned or controlled by a permit applicant is currently in violation of the law, to presume, in the absence of a failure-to-abate cessation order (FTACO), that a notice of violation (NOV) has been or is being corrected, except where evidence to the contrary is set forth in the permit application, or where the notice of violation is issued for non-payment of abandoned mine reclamation fees or civil penalties.

In litigation relating to § 773.15(b)(1) and related matters before the U.S. District Court of the District of Columbia, the Secretary advised the court that he had decided to reconsider the issue of whether, in the absence of an FTACO, the regulatory authority may presume that an NOV has been or is being corrected. The Secretary further advised the court that he would, if appropriate, engage in further rulemaking on the subject as expeditiously as possible. See *National Wildlife Fed'n* v. *Lujan*, No. 88–3117–AER (D.D.C.), Memorandum of Points and Authorities in Support of the Federal Defendants' Cross-Motion for Summary Judgment and in Opposition to Plaintiffs' Motions for Summary Judgment, at pages 89–90.

Accordingly, the proposed amendment represents the "further rulemaking" of which the Court was advised. OSM has determined that, since Congress expressly included the phrase "notices of violations of this Act" in section 510(c) of SMCRA, regulatory authorities must require applicants to list NOV's and to submit proof that the violation underlying each NOV has been corrected or is in the process of being corrected. It is not OSM's intention, however, to load NOV's into the AVS database, given the large volume of data entry that would be required to keep such violation information up to date. (Delinquent NOV civil penalties will be maintained on the AVS, however.)

Proposed language in paragraph (b)(1) of § 773.15 would provide that the regulatory authority's decision with respect to permit issuance is subject to the provisions of proposed paragraph (b)(4) of § 773.15. Proposed paragraph (b)(4) would provide that delinquent civil penalties for notices of violation or cessation orders would not be a basis to block permit issuance for a permit applicant if the four conditions contained in paragraph (b)(4) are fulfilled.

First, such notices or orders must have been issued under the Act prior to October 3, 1988, the date on which OSM's ownership and control rules were published in the **Federal Register**. See *Requirements for Surface Coal Mining and Reclamation Permit Approval; Ownership and Control; Final Rule*, 53 FR 38868 (October 3, 1988). In this context, notices or orders "issued under the Act" include those issued under the Act and those issued under the Initial Program or any applicable regulatory program.

Members of the regulated community have complained that the ownership and control rules unfairly subject them to permit blocking on account of delinquent civil penalties assessed against entities that they owned or controlled prior to October 3, 1988. If they had known that the ownership and control rules would take that position, these companies have argued, they would have taken steps at the time the violations occurred to avoid or mitigate the civil penalties by compelling the entity cited for the violations to abate promptly or to appeal the citation, or by doing so themselves.

While OSM does not endorse these companies' arguments, it does agree that the collection of civil penalties is subsidiary to the goal of achieving complete reclamation and the abatement of on-the-ground violations. By agreeing not to block owners or controllers on account of pre-October 3, 1988, civil penalties where reclamation has been completed and a portion of such penalties have been paid, OSM hopes to significantly further that goal.

On the other hand, there is no question that the regulated community and the public have been on official notice since October 3, 1988, that delinquent civil penalties would form a basis for blocking the permit applications of owners or controllers. Such owners or controllers have had sufficient incentive since the publication of the ownership and control rules, therefore, to ensure prompt abatement or timely appeal of violation notices.

Second, proposed paragraph (b)(4)(A) of § 773.15 would provide that the permit applicant must not be the person actually cited in the violation notice. The applicant must only be linked through ownership or control to the person cited in the violation notice.

Third, proposed paragraph (b)(4)(B) of § 773.15 would provide that the surface coal mining operation for which the violation notice was issued must have been fully reclaimed in accordance with the provisions of the applicable regulatory program within 120 days after the effective date of this proposed amendment to § 773.15. OSM is particularly interested in comments from the regulated community and the public as to whether the proposed time period of 120 days for the completion of reclamation is appropriate; whether a different time period would be better; or whether any time period should be included in the rule.

Fourth, proposed paragraph (b)(4)(C) would provide that, with respect to each

cessation order for which a delinquent civil penalty exists, the applicant would pay $750 of the amount of such penalty to the regulatory authority which issued such cessation order. OSM requests comments on possible alternative approaches, including OSM's requiring payment of $750 for each violation cited in a cessation order. The payment of such amount for each cessation order would not constitute settlement of the underlying debt owed by the violator. Instead, such amount would be sufficient to justify not blocking an applicant linked to a violation through ownership or control, where the surface coal mining operation has been fully reclaimed and the cessation order for which penalties are delinquent was issued prior to October 3, 1988.

As stated previously, some members of the regulated community have argued that they would have acted quickly to cure any violations if they had known, at the time that a cessation order was issued against a violator, that they would be subject to a future permit block through the rules on ownership or control. Instead, they argue, the named violators ignored the cessation orders, and such orders accumulated large amounts of civil penalties at the rate of $750 per day. Again, while OSM does not necessarily agree with the views of the regulated community on this matter, OSM intends to focus its energies upon reclamation. Accordingly, those applicants who act to reclaim expeditiously would be treated as though they were subject to only one day's worth of a cessation order penalty, rather than the many days' worth of delinquent civil penalties assessed against the violator for the violator's continued failure to abate a cessation order. OSM proposes $750 as the amount for each cessation order because this represents an amount which would be assessed under section 518(h) of the Act for each day that an operator fails to correct a violation for which a cessation order has been issued.

In substance, proposed paragraph (b)(4) of § 773.15 would provide a limited "safe harbor" with respect to civil penalties for owners or controllers of violators in order to create strong economic incentives for reclamation. The primary purpose of the ownership and control rules and the Act is to accomplish reclamation. Under this proposal, owners or controllers who wish to avoid permit blocks by reason of delinquent civil penalties would have a strong incentive to initiate and complete reclamation as soon as possible. They could then pay the proposed amount and avoid permit blocks by reason of delinquent civil penalties.

OSM is proposing this limited opportunity in the hopes that it will stimulate reclamation efforts. Those owners or controllers who do not take advantage of this opportunity would be subject to permit blocks for both delinquent civil penalties and for reclamation, along with the other bases for permit blocking contained in 30 CFR 773.15(b)(1).

As indicated, the proposed regulation would not provide the benefits of the limited safe harbor to the persons cited in the violation notices and against whom the penalties were assessed. The remaining amounts of any delinquent civil penalties would still be the basis for permit blocks against such violators, even if reclamation has been completed.

F. Section 773.20—Improvidently Issued Permits: General Procedures

OSM proposes to amend paragraph (b)(1)(ii) of CFR 773.20. The current regulation states, in relevant part, that a permit is improvidently issued if it is issued in reliance upon the presumption that an NOV was abated or is being abated, and subsequently, a cessation order is issued. OSM proposes to delete this reference to the presumption of NOV abatement because such reference would have no utility upon removal of the NOV presumption in 30 CFR 773.15(b)(1).

OSM further proposes to renumber provisions of the current regulation at 30 CFR 773.20(b) so that current paragraph (b)(2) will become (b)(1)(ii), current paragraph (b)(2)(i) will become (b)(1)(ii)(A), current paragraph (b)(2)(ii) will become (b)(1)(ii)(B), and current paragraph (b)(3) will become (b)(1)(iii).

OSM further proposes to amend the current regulation at 30 CFR 773.20 by inserting a new paragraph (b)(2), which would make the provisions of proposed § 773.26, standards for challenging ownership or control links and the status of violations, applicable when a regulatory authority makes determinations with respect to improvidently issued permits. Proposed § 773.26 would be applicable when a regulatory authority determines whether a violation, penalty, or fee remains unabated or delinquent, has been corrected, is in the process of being corrected, or is the subject of a good faith appeal, and whether any ownership or control link between the permittee and the person responsible for the violation, penalty, or fee existed, still exists, or has been severed.

The insertion of the new language referring to proposed § 773.26 would have the effect of assuring that the standards responsibilities, and procedures created by proposed § 773.26 are consistently applied to permit issuance and to determinations regarding improvident permit issuance. Such an approach enhances the fairness of the permitting process and the prospect for the uniform enforcement of nationwide minimum standards. See Memorandum of the Court, *Save Our Cumberland Mountains, Inc., et al.*, v. *Lujan*, No. 81–2134 (D.D.C. September 5, 1990), at page 4.

OSM further proposes to renumber provisions of the current regulation at 30 CFR 773.20(c), which relates to remedial measures for improvidently issued permits, so that current paragraph (c) will become (c)(1), current paragraph (c)(1) will become (c)(1)(i), current paragraph (c)(2) will become (c)(1)(ii), current paragraph (c)(3) to become (c)(1)(iii), and current paragraph (c)(4) will become (c)(1)(iv).

Further, renumbered paragraph (c)(1)(iv), which authorizes the regulatory authority to use rescission as one of the remedial measures for improvident permit issuance, would delete a specific reference contained in the current 30 CFR 773.20(c)(4) to the rescission procedures of 30 CFR 773.21.

The reason for such proposed deletion is that OSM is today proposing prior notice and a common appeal procedure for both permit suspensions and permit rescissions with respect to improvidently issued permits. The current regulation governing permit suspensions at 30 CFR 773.20(c)(3) does not impose any specific requirements for prior notice, opportunity to be heard, or right of appeal for the permittee whose permit is to be suspended. See 54 FR 18450 (1989). In contrast to this, current regulations governing permit rescissions at 30 CFR 773.21 do contain specific requirements for prior notice to a permittee and an explicit right of appeal. OSM wishes to provide for greater consistency in its procedures governing suspension and rescission of permits.

Accordingly, OSM proposes to amend 30 CFR 773.20 to add a new paragraph (c)(2) which would require that a regulatory authority which decides to suspend a permit must provide at least 30 days' prior written notice to the permittee. In the event that the regulatory authority decides to rescind a permit, it would provide notice in accordance with the provisions of 30 CFR 773.21. The proposed amendment further provides that a permittee be given the opportunity to request administrative review of the notice under proposed Office of Hearings and Appeals rule (OHA) 43 CFR 4.1370 *et*

seq., where OSM is the regulatory authority, or under the State program equivalent, where the State is the regulatory authority. See this edition of the **Federal Register.**

The proposed regulation would further allow for enhanced due process protection and fairness by providing that temporary relief from the regulatory authority's decision would be available in accordance with the provisions of proposed OHA rule 43 CFR 4.1376 or the State program equivalent. *Id.* In the absence of such temporary relief, the regulatory authority's decision would remain in effect during the pendency of appeal.

G. Section 773.21—Improvidently Issued Permits: Rescission Procedures

OSM proposes to amend the current regulation at 30 CFR 773.21(a) to make the provisions of proposed § 773.26, Standards for challenging ownership or control links and the status of violations, applicable when a regulatory authority invokes the automatic suspension and rescission procedures of 30 CFR 773.21. The rationale for such proposed amendment is the same as that discussed above with respect to similar language proposed for § 773.20.

Further, OSM proposes to delete current paragraph (c) of 30 CFR 773.21 which provides for appeals of rescission notices. As discussed above, rescission appeal procedures would be incorporated in 30 CFR 773.20.

H. Section 773.22—Verification of Ownership or Control Application Information

Proposed § 773.22 would be a new section and would mandate an inquiry whose focus would be to assure that the regulatory authority develops complete and accurate information as to the identification of the applicant and all owners or controllers of the applicant prior to making a determination on a permit application. Accordingly, the proposed section focuses on verification of ownership or control application information. Such accurate and complete information would enable the regulatory authority to make an informed decision as to whether the applicant is linked to a surface coal mining and reclamation operation in violation of the Act or any other environmental laws within the terms of 30 CFR 773.15(b)(1).

Paragraph (a) of proposed § 773.22 would impose a duty upon a regulatory authority to review the information provided in the permit application, pursuant to 30 CFR 778.13(c) and 778.13(d), to determine whether the information provided, including the identification of the operator and all owners and controllers of the operator, is complete and accurate. In making such determination, the regulatory authority would be required to compare information provided in the application with information contained in manual and automated data sources. Manual sources for review would include the regulatory authority's own enforcement and inspection records and State corporation commission or tax records, to the extent they contain information concerning ownership or control links. Automated data sources would include the regulatory authority's own computer systems, if any, and the AVS.

Paragraph (b) of proposed § 773.22 would provide that, if it appears from information provided in the application pursuant to paragraphs (c) and (d) of § 778.13 that none of the persons identified in the application has had any previous mining experience, the regulatory authority would have to inquire of the applicant whether anyone other than those persons identified in the application will own or control the mining operation as either an operator or as another type of owner or controller.

Given the complexity of modern coal mining operations, it is likely that most applicants would have at least someone in an ownership or control capacity who has had previous mining experience. If it appears from the face of an application that that is not the case, the regulatory authority would contact the applicant to verify that the applicant has not omitted from the application an operator or other owner or controller who does have such experience.

Paragraph (c) of proposed § 773.22 would provide that if, after conducting the information review described above, the regulatory authority identifies any potential omission, inaccuracy, or inconsistency in the ownership or control information provided in the application, it must contact the applicant prior to making a final determination with respect to the application. The applicant would then be required to resolve the potential omission, inaccuracy, or inconsistency through submission of an amendment to the application or a satisfactory explanation which would include credible information sufficient to demonstrate that no actual omission, inaccuracy, or inconsistency exists. The regulatory authority would also be required to take action in accordance with the provisions of proposed § 843.23, Sanctions for knowing omissions or inaccuracies in ownership or control and violation information, or the State program equivalent, where appropriate.

Paragraph (d) of proposed § 773.22 would require that, upon completion of the information review mandated by § 773.22, the regulatory authority promptly enter all ownership or control information into AVS.

I. Section 773.23—Review of Ownership or Control and Violation Information

Proposed § 773.23 is a new section which would delineate the regulatory authority's review obligations with respect to a permit application after the regulatory authority has completed the process of verifying ownership or control application information as described in proposed § 773.22.

Paragraph (a) of proposed § 773.23 would require the regulatory authority to review all reasonably available information concerning violation notices and ownership or control links involving the applicant, such information would include all information obtained under proposed § 773.22 and 30 CFR 778.13. With respect to violation notices, such information would include all information obtained under § 778.14, information obtained from OSM, including information shown in the AVS, and information obtained from the regulatory authority's own records concerning violation notices.

In substance, the proposed regulation would assure that the regulatory authority considers complete ownership, control, and violation information in making the decision required by 30 CFR 773.15(b)(1) with respect to a permit application.

Paragraph (b) of proposed § 773.23 would provide the course of action which a regulatory authority would be required to take if the review conducted pursuant to paragraph (a) of the proposed section disclosed any ownership or control link between the applicant and any person cited in a violation notice.

Thus, paragraph (b)(1) of proposed § 773.23 would require that the regulatory authority notify the applicant of such link and refer the applicant to the agency with jurisdiction over the violation notice.

Paragraph (b)(2) of proposed § 773.23 would require that the regulatory authority not approve the permit application unless and until it determines that all ownership or control links between the applicant and any person cited in a violation notice are erroneous or have been rebutted, or the regulatory authority determines that the violation to which the applicant has been linked has been corrected, is in the process of being corrected, or is the subject of a good faith appeal, within the

meaning of 30 CFR 773.15(b)(1) or the State program equivalent. The determinations to be made by the regulatory authority under paragraph (b)(2) of the proposed regulation would be made in accordance with the provisions of proposed § 773.24, Procedures for challenging ownership or control links shown in AVS, and proposed § 773.26, Standards for challenging ownership or control links and the status of violations, or their State program equivalents.

Paragraph (c) of proposed § 773.23 would require that, following the regulatory authority's decision on the application or following the applicant's withdrawal of the application, the regulatory authority would be required to promptly enter all relevant information related to the decision or withdrawal into AVS. The regulatory authority's decision could include unconditional issuance, conditional issuance, or denial of the permit. The proposed requirement that all relevant information be promptly entered into AVS is intended to insure that AVS is continually updated to reflect the most current information available with respect to permit applicants. A critical source of such information is the regulatory authority.

J. Section 773.24—Procedures for Challenging Ownership or Control Links Shown in AVS

Proposed § 773.24 is a new section. It establishes the procedures to be followed in the event that the AVS shows an ownership or control link between a person and someone cited in a Federal or State violation notice. The proposed section would provide procedures for direct appeals of such links to OSM by persons who have been so linked. The proposed section would also provide for challenges concerning the status of violations. The proposed section would further provide the opportunity to obtain temporary relief from any adverse use of such links or such violation information during the pendency of a challenge, for those persons making such challenge.

Paragraph (a)(1) of proposed § 773.24 would provide that an applicant or anyone else shown in AVS in an ownership or control link to a person cited in a Federal or State violation could challenge such a link in accordance with the provisions of paragraphs (b) through (d) of proposed § 773.24 and in accordance with the provisions of proposed § 773.26, which are discussed in detail below. Paragraph (a)(1) of proposed § 773.24 provides, however, that such challenge would not be available if the challenger is bound by a prior administrative or judicial decision with respect to the link.

In substance, paragraph (a)(1) of proposed § 773.24 provides that challenges of ownership or control links shown on AVS would be made before OSM. The theory of the proposed regulation is that, once information with respect to particular ownership or control links has become part of the AVS and accessible to regulatory authorities across the country, the responsibility for the maintenance of such information is a Federal responsibility. Accordingly, the process for challenging such information should be a Federal process.

Paragraph (a)(2) of proposed § 773.24 would provide that an applicant or anyone else shown in AVS in an ownership or control link to a person cited in a Federal violation notice could challenge the status of such violation in accordance with the provisions of paragraphs (b) through (d) of proposed § 773.24 and in accordance with the provisions of proposed § 773.26, which are discussed in detail below. The procedures applicable would be similar to those described in paragraph (a)(1) of proposed § 773.24.

The *status of the violation* means whether the violation remains outstanding, has been corrected, is in the process of being corrected, or is the subject of a good faith, direct administrative or judicial appeal to contest the validity of the violation. See 30 CFR 773.15(b)(1)(i)–(ii). This usage is carried forward into paragraphs (b) and (c) of proposed § 773.25 and into the provisions of paragraph (b)(1)(iv) of proposed § 773.26. Again, the process for challenging the status of a Federal violation would be a Federal process. Challenges would be made before OSM.

In challenging the current status of a violation under proposed § 773.24 or 773.25, a person would not be able to challenge the existence of the violation at the time it was cited. In general, the existence of the violation will have been established by prior administrative or judicial proceedings involving the person cited in the violation notice, or by such person's failure to exhaust its available remedies in a timely manner.

OSM believes that the due process rights of any person linked to a violation by ownership or control are adequately protected if the person has the right to fully challenge such link and the current status of the violation prior to any use of the link for permit blocking or rescission. If the challenger is able to show that it is not linked to the person cited in a violation notice, then it will obviously not be bound by the prior administrative or judicial proceedings involving the person cited or by such person's failure to exhaust its remedies.

If a person linked to a violation through ownership or control is not able to show that the link is erroneous, and is also not able to show that the violation has been abated, is in the process of being abated, or is the subject of a good faith appeal, the person will be subject to permit blocking or rescission. If a regulatory authority subsequently denies a permit application or takes action to suspend or rescind a permit, the person will have an opportunity at that point to litigate the existence of the violation, see 53 FR 38879 (1988), unless such litigation is precluded, e.g., by the doctrines of res judicata or collateral estoppel. OSM specifically requests comments on the scope of review that should be afforded prior to any regulatory authority decision to deny or rescind a permit.

Paragraph (a)(2) of proposed § 773.24 would provide, in language similar to that contained in paragraph (a)(1) of the proposed regulation, that the opportunity to challenge the status of a violation is not available to any person who "is bound by a prior administrative or judicial determination concerning the status of the violation." Of course, a prior adjudication concerning the status of a violation would not be binding with respect to a claim that the status of the violation has changed since the prior adjudication.

Paragraph (a)(3) of proposed § 773.24 would provide that any applicant or person shown in AVS to be linked by ownership or control to a person cited in a State violation notice would be able to challenge the status of such violation before the State that issued the violation notice. Such challenge would be made in accordance with such State's program equivalents to paragraphs (b) through (d) of proposed § 773.24 and proposed § 773.26. Again, such challenge would not involve the existence of the violation at the time it was cited, and would not be available if the challenger is bound by a prior administrative or judicial determination with respect to status of the violation.

Under paragraph (a)(3) of proposed § 773.24, the process for challenging the status of the State violation would be a State process. The regulation would assure consistency in the procedures used by the various States by requiring that such determinations be made under State equivalents to the proposed Federal regulations governing such status determinations.

Paragraph (b) of proposed § 773.24 would provide that a person seeking to

challenge ownership or control links shown in AVS or the status of Federal violations submit to OSM a written explanation of the basis for his or her challenge and provide relevant evidentiary materials and supporting documents. Such information would be submitted to the Chief of OSM's AVS Office in Washington, DC.

Paragraph (c) of proposed § 773.24 would provide that OSM make a written determination with respect to the ownership or control link and/or with respect to the status of the violation. If an ownership or control link has been challenged, OSM would determine whether the link has been shown to be erroneous or has been rebutted.

A determination that a link was *erroneous* means that the facts in the case show that no ownership or control relationship set forth in 30 CFR 773.5 ever existed. For instance, if an individual is shown on AVS as being linked to a corporation by virtue of his or her position as an officer of such corporation, see 30 CFR 773.5(b)(1), evidence demonstrating that such individual is not and has never been an officer of the corporation would support a determination that an ownership or control link based upon such a relationship is erroneous.

A determination that a link has been *rebutted* means that, while the facts in the case show that a presumed ownership or control relationship as set forth in 30 CFR 773.5(b) existed, sufficient evidence has been presented to demonstrate that the "person subject to the presumption (did) not in fact have the authority directly or indirectly to determine the manner in which the relevant surface coal mining operation (was) conducted * * *" See 30 CFR 773.5(b). Accordingly, if the individual in the preceding example was, in fact, an officer of the corporation, but did not have authority or demonstrated control over the conduct of the surface coal mining operation, the presumption of ownership or control would be rebutted. A detailed discussion of the types of proof and the standards for challenging ownership or control links is provided below in the discussion of proposed § 773.26, Standards for challenging ownership or control links and the status of violations.

Paragraph (c) of proposed § 773.24 further provides that OSM would make a determination whether the violation remains outstanding, has been corrected, is in the process of being corrected, or is the subject of a good faith appeal within the meaning of 30 CFR 773.15(b)(1).

Paragraph (d)(1) of proposed § 773.24 would provide that, if OSM has determined that the ownership or control link has been shown to be erroneous or has been rebutted and/or that the violation covered by the violation notice has been corrected, appropriately appealed, or otherwise resolved within the terms of 30 CFR 773.15(b)(1)(i)–(ii), OSM would be required to provide notice of its determination to the permit applicant or other person challenging the link or the status of the violation. If an application is pending, OSM would also notify the regulatory authority before whom the application is pending. Further, OSM would be required to correct information contained in AVS to reflect the determination which has been made.

Paragraph (d)(2) of proposed § 773.24 would provide that, if OSM has determined that the challenged ownership or control link has not been shown to be erroneous and has not been rebutted, and that the violation remains outstanding, OSM would provide notice of its determination to the permit applicant or other person challenging the link or the status of the violation. If an application is pending, OSM would also notify the regulatory authority before whom the application is pending. Further, OSM would be required to update information contained in AVS, if necessary, to reflect OSM's determinations.

Paragraph (d)(2)(i) of proposed § 773.24 would provide that OSM would serve a copy of its decision with respect to a challenge upon the applicant or other challenger by U.S. certified mail or by any other means consistent with the rules governing service of a summons and complaint under Rule 4 of the Federal Rules of Civil Procedure.

The date of service of the decision will set a date certain from which the time for appeals will begin to run. The proposed regulation would provide that service is complete upon tender of the notice or of the mail and would not be deemed incomplete by virtue of a challenger's refusal to accept the notice or mail. The theory of this provision is to assure that a challenger not be able to delay the running of the time for appeal by avoiding or refusing service of OSM's decision and then claiming that he or she was never served.

Paragraph (d)(2)(ii) of proposed § 773.24 would provide that the applicant or other challenger could appeal OSM's decision to the Department of the Interior's Office of Hearings and Appeals (OHA) within 30 days of such decision in accordance with proposed OHA regulations at 43 CFR 4.1380 *et seq.* See this edition of the **Federal Register**. Paragraph (d)(2)(ii) would further provide that OSM's decision would remain in effect unless temporary relief was granted in accordance with proposed OHA regulations at 43 CFR 4.1386. *Id.*

The proposed regulation would provide all challengers to an OSM decision in these matters with the opportunity to appeal the decision to OHA. Currently, appeals by individuals from OSM decisions with respect to information contained in AVS are made to the Assistant Secretary—Policy, Management, and Budget under procedures developed under the Privacy Act of 1974. Appeals by entities other than individuals are made to OHA. See Preamble to Requirements for Surface Coal Mining and Reclamation Permit Approval; Ownership and Control; Final Rule, 53 FR 38868 at page 38879 ("Procedures to Amend Applicant Violator System Information") (October 3, 1988). OSM believes that a single, formal process of appeal for both individuals and entities will promote consistency for both the public and the regulated community.

Paragraph (d)(2)(ii) of proposed § 773.24 would further provide for temporary relief from OSM's decision, if OHA granted such relief in accordance with proposed OHA regulations at 43 CFR 4.1386. The filing of an appeal would not automatically suspend the use of the information in AVS during the pendency of such appeal. The challenger would have to explicitly seek such relief in appeal proceedings before OHA.

Under its proposed regulations, OHA would apply the criteria of section 525(c) of the Act, 30 U.S.C. 1275(c), to determine whether such temporary relief was warranted. See proposed OHA regulations at 43 CFR 4.1386. To grant temporary relief under such criteria, OHA would have to find that the challenger has a substantial likelihood of prevailing in his appeal of the OSM decision and that temporary relief, if granted, would not adversely affect the health or safety of the public or cause significant, imminent environmental harm to land, air, or water resources. See this edition of the **Federal Register**.

In determining whether the granting of temporary relief would cause significant, imminent environmental harm, OHA would not attempt to decide whether a denial of temporary relief would compel the applicant or other challenger to abate a violation posing such harm. It is not the intent of the proposed rules to force a person to abate a violation even if he or she is able to show a substantial likelihood that he or she had no ownership or control over the operation that is in violation.

Instead, OHA would focus its attention on the compliance history of those persons who do appear to have had ownership or control over operations in violation, to determine whether the granting of temporary relief would pose a risk of significant, imminent environmental harm at sites for which new permits could be issued during the pendency of the appeal process.

K. Section 773.25—Procedures for Challenging Ownership or Control Links Prior to Entry in AVS

Proposed § 773.25 is a new section and represents OSM's desire to enhance procedural safeguards in its development and implementation of AVS. In substance, the proposed regulation would prospectively require that OSM or a State regulatory authority provide notice to those persons who are actively involved in surface coal mining operations and who are linked to a violation through ownership or control before such link information is incorporated into AVS. Such persons would then have an opportunity to challenge such information.

OSM believes that adequate due process rights to notice and an opportunity to be heard are afforded by current practices which permit a challenge to ownership or control and violation information after it is incorporated into AVS. Such challenges can be made currently both within the context of a permit application and independent of such an application. OSM believes that these opportunities suffice to pass constitutional muster. See Preamble to Requirements for Surface Coal Mining and Reclamation Permit Approval; Ownership and Control; Final Rule, 53 FR 38868 at page 38885 ("Due Process Provided") and at page 38879 ("Procedures to Amend Applicant Violator System Information") (October 3, 1988).

Nevertheless, some members of the regulated community believe that it is unfair to incorporate information linking persons to violators into AVS before giving such persons an opportunity to challenge such information. To the extent that persons perceive the system as fair, they may be more willing to comply with the Act. Also, the accuracy of the AVS in identifying links between persons and violators could be augmented by providing the right to challenge information prior to the incorporation of such information into AVS. The process of reviewing and responding to such challenges may also enhance the completeness of the AVS database.

OSM believes that the credibility of the AVS with the public, the regulated community, and State regulatory authorities will be reinforced by enabling persons to challenge information before such information is incorporated into AVS. Thus, OPM proposes to go beyond constitutional due process requirements and to provide notice and the opportunity to be heard to any person who is actively involved in a surface coal mining operation and who OSM believes is linked to a violator, prior to the incorporation of such information into AVS.

As part of OSM's ongoing development of AVS, OSM is currently conducting research to identify the owners and controllers of surface coal mining operations, including those operations not identified as being in violation of SMCRA or other laws. When OSM completes its research with respect to a surface coal mining operation not currently part of the AVS database, OSM routinely attempts to provide notice and the opportunity to challenge such information to the owners and controllers of such operation prior to the loading of such information into the AVS database. OSM is also providing notice to permit applicants of their ownership or control links to surface coal mining operations currently incorporated into the AVS database. Where OSM has already provided a person with prior notice of an ownership or control link to a surface coal mining operation, whether or not such surface coal mining operation is identified as being in violation of SMCRA or other laws at the time of such notice, OSM would consider that the notice requirements of proposed § 773.25 have been fulfilled.

Paragraph (a)(1) of proposed § 773.25 would provide for prior notice and an opportunity to challenge to a person linked to Federal or State violation notices, subject to certain exceptions listed in paragraph (a)(2) of the proposed regulation which are discussed below. The provisions of paragraph (a)(1) and § 773.25 are designed to deal with ownership and control links not previously entered into AVS. The beneficiary of such prior notice would be a person who has owned or controlled a surface coal mining and reclamation operation that has been active within the previous 12 months from the date that a link between such person and a violator has been identified.

A basis for limiting the class of persons who will receive notice of ownership or control links prior to listing on AVS is the sheer number of potential recipients of such notice. Given the potentially huge number of persons who could come onto the AVS as owners or controllers in the future, OSM has determined that it would be impossible to provide prior notice to all such persons without paralyzing AVS in service of such notice.

Further, providing notice to people who have been actively involved in mining within the past year increases the probability that notice is provided to those who would need such prior notice. Persons who have been actively involved in surface coal mining and reclamation operations within the past year are more likely to be applying for new permits than those who have been out of the mining business for over a year.

Accordingly, the class of those to receive prior notice would be limited to those who have been active in surface coal mining and reclamation operations within the previous 12 months.

Paragraph (a)(2) of proposed § 773.25 would provide that the provisions requiring prior notice would not apply to any ownership or control link identified as a result of the application review process set forth in sections 30 CFR 773.15(b), proposed § 773.22, and proposed § 773.23, nor to the improvidently issued permit process set forth in 30 CFR 773.20, 30 CFR 773.21, and 30 CFR 843.21, since those provisions already require notice and an opportunity to be heard.

Paragraph (b) of proposed § 773.25 would provide that the agency which identified the ownership or control link would provide written notice to the person of such link and of the opportunity to challenge the link or the status of the violation according to the provisions of paragraph (c) of proposed § 773.25. Thus, if OSM identifies the link, OSM would provide the notice to the person. If a State regulatory authority identifies the ownership or control link, the State regulatory authority would provide the required notice. The paragraph would further require that such notice be provided prior to the entry of the link information into AVS. If a State does not provide the required notice, however, OSM is not precluded from doing so.

Paragraph (b) of proposed § 773.25 would further require that such notice be served on the person by certified mail, or by any means consistent with the rules governing service of a summons and complaint under rule 4 of the Federal Rules of Civil Procedure. Service would be considered complete upon tender of the notice or of the mail and would not be deemed incomplete

because of a refusal of acceptance by the person to be served. Similar methods of service have been proposed for the service of OSM's decision as to a challenge of an ownership or control link under the provisions of paragraph (d)(2)(i) of proposed § 773.24. The discussion and rationale previously provided in this Preamble with respect to paragraph (d)(2)(i) of proposed § 773.24 is equally applicable here.

In general, the procedures for challenging ownership or control links before such links are incorporated into AVS are consistent with the procedures for challenging information already contained in AVS. The major difference between the two procedures would be that a challenge to ownership or control information already shown on AVS would be addressed only to OSM. In contrast to this, where a State regulatory authority identifies an ownership or control link not yet shown on AVS and provides notice to the person so linked, a challenge to such information, prior to its entry into AVS, would be addressed to the State regulatory authority.

The basis for providing that a challenge be made to the State regulatory authority prior to the entry of the ownership or control information into AVS is that the proposed link to a State violation notice has been identified by the State and closely connected to enforcement of the State's regulatory program under SMCRA. The State would have a strong interest in the resolution of such a challenge. Also, it is reasonable to assume that the State has custody of, or convenient access to, the information which forms the basis of the proposed link. Accordingly, a challenge would be conveniently made in the State forum. Further, the information has not yet entered AVS and become part of the Federal information stream. Under such circumstances, any Federal interest in the resolution of such a challenge is outweighed by the State interests in a challenge to State-identified links prior to their entry into AVS.

Paragraph (c)(1) of proposed § 773.25 would require that a person seeking to challenge the link submit a written explanation of the basis for the challenge, along with any relevant evidentiary materials and supporting documents, to the agency providing notice within 30 days of service of the notice. Under the paragraph (c)(1), a challenge could not be initiated by a person who is bound by a prior administrative or judicial determination concerning the matter.

Paragraph (c)(2) of proposed § 773.25 would provide that, when the agency providing prior notice is OSM, the person challenging the information would send his or her written explanations and materials to OSM at the address provided in paragraph (b) of proposed § 773.24. Paragraph (c)(2) of proposed § 773.25 would further provide that OSM make its decision with respect to such challenges in accordance with the provisions of paragraph (c) of proposed § 773.24 and the provisions of proposed § 773.26. Appeals of OSM's decision would be undertaken in accordance with the provisions of paragraph (d) of proposed § 773.24.

Paragraph (c)(3) of proposed § 773.25 would provide that, where the agency providing notice to a person of an ownership or control link is a State regulatory authority, the State program equivalents to paragraphs (b)–(d) of proposed § 773.24 and to proposed § 773.26 would apply.

Paragraph (d) of proposed § 773.25 would provide that, if no written explanation is provided within 30 days of the service of the notice on the person, or if OSM or the State regulatory authority determines that the challenge to the ownership or control link is not well taken and that the violation covered by the notice remains outstanding, the agency making such determination would be required to promptly enter the link information into AVS. If temporary relief from the agency's determination has been granted in accordance with the provisions of proposed OHA regulations at 43 CFR 4.1386 or in accordance with the equivalent State program, then the agency would not enter such information pending a decision upon the challenger's appeal to OHA or to the State reviewing authority. The purpose of paragraph (d) of proposed § 773.25 is to provide for finality in the process of giving notice and an opportunity to challenge ownership and control link information prior to the entry of such information into AVS.

OSM intends that the provisions of proposed § 773.25 operate prospectively for information to be incorporated into AVS after the effective date of this regulation. As stated above, OSM believes that current procedures adequately protect due process rights. OSM has also made concerted efforts to verify information currently contained in the AVS database. The effect of imposing the provisions of the proposed section retroactively to information currently in AVS would be to hinder the current, necessary use of the AVS in the permit application process. Accordingly, OSM will use information currently shown on AVS, along with other information available to OSM, as the basis for making decisions with respect to permit applications.

L. Section 773.26—Standards for Challenging Ownership or Control Links and the Status of Violations

Proposed § 773.26 would establish standards for challenges to ownership or control links and for challenges to the status of violations. The proposed section would allocate responsibilities between OSM and State regulatory authorities for resolving issues related to ownership and control and would provide the substantive criteria for resolving such issues.

Paragraph (a) of proposed § 773.26 provides that its provisions would be applicable to any challenge concerning an ownership or control link or the status of a violation when such challenge is made under the provisions of 30 CFR 773.20 and 30 CFR 773.21 (improvidently issued permits); proposed §§ 773.23 (the regulatory authority's review of ownership or control and violation information), 773.24 (procedures for challenging ownership or control links shown in AVS), and 773.25 (procedures for challenging ownership or control links prior to entry in AVS); or 30 CFR part 775 (administrative and judicial review of permitting decisions).

Paragraph (b) of proposed § 773.26 would provide the basic allocation of authority among regulatory authorities to make decisions with respect to ownership or control and with respect to the status of violations.

Paragraph (b)(1)(i) of proposed § 773.26 would provide that the regulatory authority before which an application is pending would have authority for making decisions with respect to the ownership or control of the applicant. Such regulatory authority has responsibility for reviewing information submitted by the applicant and other available information to ensure that complete identification of the applicant's ownership or control links. *See* discussion above with respect to proposed § 773.22, Verification of ownership or control application information. Accordingly, that regulatory authority would be in the best position to make an informed decision with respect to ownership or control links to the applicant.

Paragraph (b)(1)(ii) of proposed § 773.26 would provide that the regulatory authority that issued a permit would have authority for making decisions with respect to the ownership or control of the permittee. Such decisions would be necessary in determining whether the permit was improvidently issued, pursuant to 30 CFR 773.20. The regulatory authority

which issued a permit would have done so based upon a complete review of ownership or control information as required by the proposed regulations. Further, as will be discussed below, the proposed regulations would require that the regulatory authority issuing a permit make regular, periodic checks of ownership and control information with respect to such permit. See proposed § 773.27, Periodic check or ownership or control information. Accordingly, that regulatory authority would be in the best position to make decisions with respect to ownership or control links to the permittee.

Paragraph (b)(1)(iii) of proposed § 773.26 would provide that the State regulatory authority that issued a State violation notice would have authority for making decisions with respect to the ownership or control of any person cited in the notice. The State regulatory authority issuing the violation should be in the best position to be aware, in the first instance, of operative facts which identify those owners or controllers "who have the authority directly or indirectly to determine the manner in which the relevant surface coal mining operation is conducted" and who can thus cause the abatement of the violation. See 30 CFR 773.5(b).

Paragraph (b)(1)(iv) of proposed § 773.26 would provide that the regulatory authority that issued a violation notice, whether State or Federal, would have authority for making decisions concerning the status of the violation covered by the notice. The *status* of the violation would mean whether the violation remains outstanding, has been corrected, is in the process of being corrected, or is the subject of a good faith appeal, within the meaning of 30 CFR 773.15(b)(1). This approach is consistent with the provisions of section 510(c) of SMCRA which requires that a regulatory authority considering a permit application look to the "agency that has jurisdiction over such violation" to determine whether a violation "has been or is in the process of being corrected."

Paragraph (b)(2) of proposed § 773.26 would provide that OSM would have authority for making decisions with respect to the ownership or control of any person cited in a Federal violation notice. This provision is simply the Federal counterpart to proposed paragraph (b)(1)(iii), and the same basic rationale applies here, as well.

Under the allocation principles set forth in paragraphs (b)(1) and (b)(2) of proposed § 773.26, a regulatory authority that was deciding whether a permit application should be granted or whether a permit had been improvidently issued would determine for itself the ownership or control of the applicant or permittee, but it would defer to the regulatory authority that issued a violation notice for a determination of the ownership or control of the violator. The application would be blocked or the permit would be found improvidently issued if any owner or controller of the applicant or permittee were also an owner or controller of a violator, as determined by the respective regulatory authorities.

Paragraph (b)(3) of proposed § 773.26 would provide that the authority of State regulatory authorities to make decisions with respect to ownership or control links or the status of violations is subject to OSM's oversight authority under 30 CFR parts 733, 842, and 843. Under paragraph (b)(3) of proposed § 773.26, when OSM disagreed with a decision of a State regulatory authority, it would take action, as appropriate, under proposed § 843.24, Oversight of State permitting decisions with respect to ownership or control or the status of violations.

Under paragraph (b)(3) of proposed § 773.26, OSM's review would be conducted in a manner consistent with normal oversight and OSM's desire to maintain the integrity of the AVS. Accordingly, OSM would review data entered into AVS by the States and the process by which the States make decisions regarding ownership and control links to the extent necessary to insure the integrity of the AVS. While OSM would not review every individual ownership and control decision made by a State regulatory authority, it is probable that in the exercise of its oversight authority, OSM would review particular decisions with a view to determining whether the State regulatory authority complied with the provisions of its approved program.

Further, if it comes to OSM's attention that provisions of a State program have created an ownership or control link to a violation where comparable Federal provisions would not generate a presumptive ownership or control link under 30 CFR 773.5(b), OSM will consider whether placement of the link information into AVS is appropriate. For instance, a State regulatory program might provide that a five percent or greater shareholder of an entity is presumed to be an owner or controller of the entity. Such a provision is more stringent than the comparable Federal provision at 30 CFR 773.5(b)(5), which presumes that only ten percent or greater shareholders are owners or controllers. OSM would probably not include such a State link into AVS, unless there is some other basis to support the link which is no more stringent than the comparable Federal provisions contained in 30 CFR 773.5. If the State regulatory authority has already entered such information into AVS, OSM would consider whether continuation of the link in the AVS database is appropriate.

Paragraph (c) of proposed § 773.26 would establish evidentiary standards applicable to the formal and informal review of ownership or control links and the status of violations.

Paragraph (c)(1) of proposed § 773.26 would provide that in any formal or informal review of an ownership or control link or of the status of a violation, the agency responsible for making a decision would be required to first make a prima facie determination or showing that the link exists or that the violation remains outstanding. A prima facie determination would be made when the agency is reviewing the evidence itself, in an informal process; a prima facie showing would be made when the agency's determination is the subject of a formal administrative or judicial review process. When the agency makes such a determination or showing, the person seeking to challenge the link or the status of the violation would then have the burden of proving the necessary elements of his or her challenge to the link or to the status of the violation by a preponderance of the evidence.

Under paragraph (c) of proposed § 773.26, a challenger of a link to a violation would have to prove at least one of three proposed conclusions by a preponderance of the evidence to succeed in his or her challenge.

First, under paragraph (c)(1)(i) of proposed § 773.26, a challenger could prove that the facts relied upon by the responsible agency to establish ownership or control within the terms of 30 CFR 773.5(a) or to establish a presumption of ownership or control under 30 CFR 773.5(b) do not or did not exist.

For instance, a person is deemed to be an owner or controller of a surface coal mining operation, under the provisions of 30 CFR 773.5(a)(1), if he or she was a permittee of such operation. A person could successfully challenge this conclusion by demonstrating that another person with a similar name, rather than the challenger, was in fact the permittee. Pursuant to 30 CFR 773.5(b)(1), a person is presumed to be an owner or controller of an entity if he or she is an officer of the entity. A person could demonstrate that he or she never been, in fact, an officer of the entity.

Paragraph (c)(1)(ii) of proposed § 773.26 would provide that a person subject to a presumption of ownership or control under 30 CFR 773.5(b) could rebut such presumption by demonstrating that he or she does not or did not in fact have the authority directly or indirectly to determine the manner in which surface coal mining operations are or were conducted. Such demonstration would be made in accordance with the provisions of paragraph (d) of proposed § 773.26.

For instance, a person presumed to be an owner or controller of a corporation by reason of being an officer in such corporation, 30 CFR 773.5(b)(1), could demonstrate that he or she did not have authority indirectly or directly to determine the manner in which surface coal mining operations are or were conducted by such corporation.

Paragraph (c)(1)(iii) of proposed § 773.26 would provide that a challenger could prove that the violation covered by a violation notice did not exist, has been corrected, is in the process of being corrected, or is the subject of a good faith appeal within the meaning of 30 CFR 773.15(b)(1). As noted previously with respect to proposed § 773.24, a person challenging the status of a violation under proposed § 773.24 or 773.25 would not be able to challenge the existence of the violation at the time it was cited. The existence of the violation could be challenged, however, in a proceeding under 30 CFR 773.20–773.21 (involving improvidently issued permits) or 30 CFR part 775 (involving administrative or judicial appeals of permitting decisions), unless the challenger had failed to take timely advantage of a prior opportunity to litigate the violation or was bound by a previous administrative or judicial determination concerning the existence of the violation.

Paragraph (c)(2) of proposed § 773.26 would describe the type of evidence that a person challenging of an ownership or control link or the status of a violation would have to present to meet the burden of proof by a preponderance of the evidence. The proposed regulation would provide that the evidence presented be probative, reliable, and substantial. See 5 U.S.C. 556(d).

Paragraph (c)(2) of proposed § 773.26 provides a list of examples of such evidence for proceedings before the "responsible agency" (the agency with responsibility for making a decision with respect to a challenge) and for proceedings before administrative or judicial tribunals reviewing the decisions of the responsible agency. The list of the types of acceptable evidence is intended to be illustrative, not exhaustive. It is expected that regulatory authorities would add to this list as they develop experience in making determinations under the proposed regulation.

Paragraph (c)(3)(i) of proposed § 773.26 focuses upon proceedings before the responsible agency. The list of examples includes documents which are likely to be truthful and which have certain indicators of reliability which go beyond the mere assertions of the individuals presenting the evidence.

Paragraph (c)(3)(i)(A) of the proposed section would provide that a challenger may submit affidavits setting forth specific facts concerning the scope of responsibility of the various owners or controllers of an applicant, a permittee, or any person cited in a violation notice; the duties actually performed by such owners or controllers; the beginning and ending dates of such owners' or controllers' affiliation with the applicant, permittee, or person cited in a violation notice; and the nature and details of any transaction creating or severing an ownership or control link; or specific facts concerning the status of the violation.

The proposed regulation would require proof of specific facts reflecting upon issues which would be essential to the rebuttal of presumptions as provided by paragraph (d) of proposed § 773.26, which is discussed in this Preamble below.

The theory underlying the use of affidavits proposed by paragraph (c)(3)(i)(A) of proposed § 773.26 is that affidavits have certain indicators of reliability. They are made under oath before a government official licensed to witness such oaths, a notary public. Further, affidavits are recognized as evidence sufficient to support a motion for summary judgment in civil litigation. *See* Rule 56 of the Federal Rules of Civil Procedure.

Paragraph (c)(3)(i)(B) and (c)(3)(i)(C) of proposed § 773.26 each look to official certification as the basis for the reliability of a submitted document. Paragraph (c)(3)(i)(B) would allow for submission of certified copies of corporate minutes, stock ledgers, contracts, purchase and sale agreements, leases, correspondence, or other relevant company records. Paragraph (c)(3)(i)(C) would allow for submission of certified copies of documents filed with or issued by any State, Municipal, or Federal governmental agency.

Paragraph (c)(3)(i)(D) of proposed § 773.26 would provide for a challenger's submission of an opinion of counsel in support of his or her position. Such opinion would be appropriate for submission when it is supported by evidentiary materials and when it is rendered by an attorney who certifies that he or she has personally and diligently investigated the facts of the matter and that he or she is qualified to render the opinion.

Such opinion is similar in type to that provided by counsel to an adversary party as to title, tax issues, or environmental compliance in real estate transactions. The indicator of reliability in this document is that the attorney is required to do a comprehensive personal investigation as the basis for his or her opinion and to offer his or her opinion subject to professional standards and possible sanctions for the violations of such standards. In addition, under the proposed regulation, the attorney's opinion by itself would not be enough. Evidentiary materials would need to be submitted along with such opinion.

Paragraph (c)(3)(ii) of proposed § 773.26 would provide that, when the decision of the responsible agency is reviewed by an administrative or judicial tribunal, the challenger could present any evidence to such tribunal which is admissible under the rules of the tribunal. Under the proposed regulation, however, the evidence submitted would still have to be probative, credible, and substantial.

Paragraph (d) of proposed § 773.26 represents OSM's attempt to offer substantive standards which would establish what must be proved by those seeking to rebut the presumptions of ownership or control contained in current § 773.5(b) of this title. Proof of that facts set forth in the proposed regulation would establish that the presumed owner or controller did not, in fact, have the authority directly or indirectly to determine the manner in which the relevant surface coal mining operation was conducted, under the provisions of 30 CFR 773.5(b).

In general, the proposed standards would allow a presumed owner or controller to demonstrate that he or she lacked control over a surface coal mining operation by presenting evidence that he or she actually lacked authority directly or indirectly to determine the manner in which the relevant surface coal mining operation would be conducted. In the alternative, with respect to a presumed owner or controller of a violator, the person could present evidence that he or she took all reasonable steps within his or her authority to cause the violation to be abated and that such abatement was prevented by those in actual control of the mining operation. If a person has done all that he or she can do to bring

about abatement and abatement is prevented by others, then the person does not have true control of the surface coal mining operation.

If a person intends to prove non-control through attempted abatement, he or she would be required to demonstrate what efforts he or she took to compel abatement during his or her tenure as an owner or controller. The basis for this approach is that people may change jobs or sell their shares. A person may not currently control a surface coal mining operation and, therefore, be unable at present to compel the violator to abate an outstanding violation. Thus, the proof of his or her current inability to bring about abatement may merely demonstrate a current lack of control. If a person previously had the capacity to compel the surface coal mining operation to abate the violation, however, and such capacity was not exercised while the violation was outstanding, it is reasonable to hold such person accountable for the unabated violation.

The test of control should look to the time that a person was in the presumed ownership or control relationship and would have been able to fully exercise the powers of such a relationship. If a presumed owner or controller is seeking to prove a lack of control by virtue of an actual, unsuccessful abatement attempt, such abatement effort is meaningful as an indicator of non-control if it was undertaken when the violation occurred or during the period of a person's tenure in the relationship which forms the basis for presuming that he or she is an owner or controller.

Further, a person could have a number of different types of presumptive links to an entity. He or she could be a shareholder, a director, an officer, and a person with authority to commit the assets of an entity. The proof which successfully rebuts one type of ownership or control link to an entity would not automatically rebut another link to the same entity. Thus, a person could rebut one ownership or control link to an entity and still be considered an owner or controller based on another type of link.

Also, there can be multiple owners or controllers of an entity. Proof that one person is not an owner or controller does not necessarily mean that another person is an owner or controller. Conversely, proof that one person is not an owner or controller does not mean that another person is also not an owner or controller. An entity does not have to have a single owner or controller. Instead, ownership or control may be dispersed among a number of persons.

OSM is particularly interested in comments from the regulated community and the interested public as to whether the standards contained in paragraph (d) of proposed § 773.26 are needed and helpful.

Paragraph (d)(1) of proposed § 773.26 would provide that, with respect to a presumed owner or controller of an applicant, proof could be submitted that the person subject to the presumption does not and will not have the authority directly or indirectly to determine the manner in which the relevant surface coal mining operation will be conducted, and that such authority is or will be exercised by one or more other persons to the exclusion of the presumed owner or controller.

The relevant time focus of this inquiry would be the present and the future. In effect, the issue of concern to a regulatory authority in making a decision with regard to a permit applicant is, how will this applicant operate if the permit is issued? Accordingly, a challenger seeking to rebut a presumption of ownership or control would have to produce proof of actual owners or controllers who will have authority over the relevant surface coal mining operation which is the subject of the application.

Paragraph (d)(1) of proposed § 773.26, which would govern ownership or control proof relating to applicants, would be subject to an exception contained in paragraph (d)(4) of the proposed section. Paragraph (d)(4) would provide that where the person cited in a violation notice is the applicant, the ownership or control of such person with respect to the violation notice would be determined under the provisions of proposed paragraph (d)(3) of proposed § 773.26, which would govern determinations of ownership or control of persons cited in violation notices.

Paragraph (d)(2) of proposed § 773.26 would provide that, with respect to a presumed owner or controller of a permittee, proof could be submitted that, at the time the permit was issued, the person subject to the presumption did not have the authority directly or indirectly to determine the manner in which the relevant surface coal mining operation would be conducted, and that such authority was to be exercised by one or more other persons to the exclusion of the presumed owner or controller.

The relevant time focus of this inquiry would be the time of permit issuance, since the purpose of the inquiry would be to determine whether the permit was improvidently issued. Accordingly, a challenger would have to demonstrate that, at the time of permit issuance, the person subject to the presumption did not have actual control over the relevant surface coal mining operation.

Like paragraph (d)(1) of proposed § 773.26, paragraph (d)(2), which would govern ownership or control proof relating to permittees, would be subject to the exception contained in paragraph (d)(4) of the proposed section. Paragraph (d)(4) would provide that where the person cited in a violation notice is the permittee, the ownership or control of such person with respect to the violation notice would be determined under the provisions of proposed paragraph (d)(3) of proposed § 773.26, which would govern determinations of ownership or control of persons cited in violation notices.

Paragraph (d)(3) of proposed § 773.26 would provide standards for the rebuttal of ownership or control presumptions for persons cited in violation notices.

Paragraph (d)(3)(i) of proposed § 773.26 would provide alternative standards of proof to rebut the presumption that a present or former officer of an entity cited in a violation is an owner or controller of such entity. See 30 CFR 773.5(b)(1). A challenger would have to submit proof that the officer does not and did not have authority or demonstrated control over the conduct of the surface coal mining operation, including the ability to cause the abatement of violations, nor any level of supervisory responsibility over a person having such authority or control.

In the alternative, a challenger would submit proof that the officer has taken all responsable steps within his or her legal authority to bring about abatement of the violation, but that such abatement has been prevented by the person or persons who have or had actual authority or control over the conduct of the surface coal mining operation.

Paragraph (d)(3)(ii) of proposed § 773.26 would provide alternative standards of proof to rebut the presumption that a present or former owner of 10 through 50 percent of an entity cited in a violation is an owner or controller of such entity. See 30 CFR 773.5(b)(5). A challenger would have to submit proof that the owner did not know of the violation at the surface coal mining operation and should not, considering all of the circumstances of the entity's method of operation, be expected to have known of such violation.

In the alternative, a challenger would submit proof that the owner took all reasonable steps within his or her legal authority to bring about abatement of

the violation, but that such abatement was prevented by the person or persons who had actual authority or control over the conduct of the surface coal mining operation.

Paragraph (d)(3)(iii) of proposed § 773.26 would provide the standard of proof to rebut the presumption that a present or former director or general partner or a present owner of 10 through 50 percent of an entity cited in a violation is an owner or controller of such entity. See 30 CFR 773.5(b) (1), (4), (5). A challenger would have to submit proof that the director, general partner, or owner has taken all reasonable steps within his or her legal authority to bring about abatement of the violation, but that such abatement has been prevented by the person or persons who have or had actual authority or control over the conduct of the surface coal mining operation.

Proposed paragraphs (d)(3)(i)–(iii) recognize that former shareholders, who are often just investors, may not have been in a position to know of a company's violations. Former officers with line responsibility for a surface coal mining operation, however, and former directors or general partners would have had a responsibility to know of such violations and to have done what they could to bring about abatement. Alleged lack of knowledge on their part, therefore, would not be sufficient to rebut the presumption of ownership or control.

Present shareholders will be on notice of the existence of the violation at the time of the regulatory authority's initial compliance check under § 773.15(b) and proposed § 773.23, if not sooner, and will thereafter have a responsibility to do what they can to bring about abatement. Alleged lack of knowledge on the part of present shareholders, therefore, would also not be sufficient to rebut the presumption of ownership or control.

Finally, under paragraphs (d)(3)(i)–(iii), it would not be sufficient for a shareholder, officer, director, or general partner to show that he or she was simply one among many other owners or controllers. For example, if a corporation has five shareholders each owning 20 percent of the stock, and the shares were voted 60 to 40 against spending the necessary funds to reclaim the company's mine site, the presumed owner or controller would have to show that his or her shares were among the 40, not among the 60. Thus, if a minority owner or controller is part of a majority block of ownership or control, the presumption would not be rebutted.

Paragraph (d)(3)(iv) of proposed § 773.26 would provide the standard of proof to rebut the presumption that a present or former operator of a surface coal mining operation is an owner or controller of such operation. See 30 CFR 773.5(b)(2). A challenger would have to submit proof that the violation was caused by the permittee or other person or persons who have or had actual authority or control over a portion of the surface coal mining operation, to the exclusion of the operator.

For example, if a permittee employed two contractors, one to conduct underground mining activities and one to maintain sedimentation ponds, haul roads, and other surface areas, the mining contractor may be able to rebut a presumption of control with respect to a water quality violation by showing that the violation related exclusively to the activities of the other contractor.

Paragraph (d)(3)(v) of proposed § 773.26 would provide the standard of proof to rebut the presumption that a person with present or former authority to commit the assets or working resources of an entity is an owner or controller of such entity. *See* 30 CFR 773.5(b)(3). A challenger would have to submit proof that the person has taken all reasonable steps within his or her legal authority to bring about abatement of the violation, but that such abatement has been prevented by the person or persons who have or had actual authority or control over the conduct of the surface coal mining operation.

Paragraph (d)(3)(vi) of proposed § 773.26 would provide rebuttal standards applicable to a person presently or formerly owning or controlling coal to be mined by another person under a lease, sublease, or other contract and having the right to receive such coal after mining or having authority to determine the manner in which the surface coal mining operation is or was conducted. See 30 CFR 773.5(b)(6).

A challenger would have to submit proof that the person in fact does not and did not have the authority directly or indirectly to determine the manner in which the relevant surface coal mining operation is or was conducted, and that such authority is or was exercised by one or more other persons to the exclusion of the person owning or controlling the coal.

In the alternative, a challenger could submit proof that the person has taken all reasonable steps within his or her legal authority to bring about abatement of the violation, but that such abatement has been prevented by the person or persons who have or had actual authority or control over the conduct of the surface coal mining operation.

As mentioned previously in this Preamble, paragraph (d)(4) of proposed § 773.26 would provide that where the person cited in a violation notice is itself the applicant or the permittee, the ownership or control of such person with respect to the violation notice would be determined under the provisions of proposed paragraph (d)(3) of proposed § 773.26, which would govern determinations of ownership or control of persons cited in violation notices, rather than under the provisions of paragraph (d)(1) of proposed § 773.26, rebuttal standards for applicants, or (d)(2) of proposed § 773.26, rebuttal standards for permittees.

Paragraph (d)(5) of proposed § 773.26 would further delineate the type of proof which would have to be provided by a challenger. Paragraph (d)(5) would govern the situation, under paragraphs (d)(1) through (d)(3) of proposed § 773.26, in which proof is submitted that one or more other persons exercised the authority to determine the manner in which a surface coal mining operation was conducted, to the exclusion of the presumed owner or controller, or that abatement was prevented by such other persons. When such proof is submitted, the challenger would also be required to identify the other persons who exercised such authority or prevented abatement and give specific facts demonstrating how such other persons exercised their authority to the exclusion of the presumed owner or controller or prevented abatement.

Paragraph (e) of proposed § 773.26 would provide for the review and revision of information in AVS to reflect determinations made by regulatory authorities in response to challenges of ownership or control links or the status of violations. Paragraph (e) would provide that, following any determination by a State regulatory authority or other State agency, or following any decision by an administrative or judicial tribunal reviewing such determination, the State regulatory authority shall review the information in AVS to determine if the information in AVS is consistent with the determination or decision. If it is not consistent, the State regulatory authority would be required to promptly inform OSM and request that the AVS information be revised to reflect the determination or decision.

M. Section 773.27—Periodic Check of Ownership and Control Information

Proposed § 773.27 would require that the regulatory authority engage in periodic review of a permitted site to assure that basic ownership and control information contained in the current

official record of the permit was and remains complete and accurate.

The underlying theory of this proposed section is that some permittees may inadvertently fail to provide accurate ownership and control information in their permit applications. Other permittees may intentionally provide misleading information in their applications to enable them to receive permits which would otherwise be blocked. In addition, relevant information as to ownership and control and as to the identification of operators may change over the life of a permit. In any of these situations, to the extent that a regulatory authority engages in periodic investigations subsequent to the issuance of a permit, there is a greater likelihood that only eligible persons are allowed to engage in surface coal mining operations and that the records of the regulatory authority will accurately reflect the actual facts of a particular permitted site.

Paragraph (a) of proposed § 773.27 would require that the regulatory authority take certain actions required by paragraphs (a)(1) and (a)(2) of proposed § 773.27, to determine whether the information contained in the current official record of the permit concerning the permittee, the operator, and the MSHA identification number for the site was and remains complete and accurate. The actions required by paragraphs (a)(1) and (a)(2) would have to be undertaken by the regulatory authority within two months after the initial disturbance of a permitted site and annually thereafter for as long as coal extraction on the site has not been completed.

Paragraph (a)(1) of proposed § 773.27 provides that the regulatory authority would be required to conduct an on-site inquiry in addition to, or during a regular inspection of, the site.

Paragraph (a)(2) of proposed § 773.27 provides that the regulatory authority would be required to conduct a check of Mine Safety and Health Administration (MSHA), Abandoned Mine Land (AML), and Energy Information Administration (EIA) information, as such information sources are made available through AVS.

Site disturbance is proposed as the key event triggering the regulatory authority's duty to conduct further investigation of previously submitted information. In the event that the permit application has failed to identify the operator who is actually conducting mining operations on the site, such operator can be readily identified once surface mining activities have begun.

On on-site inquiry means simply that the regulatory authority should be observing activities on the site and asking questions. For instance, if an inspector observes that the name on a mine identification sign or on motor vehicles or other equipment on the site is not listed in the permit application as an operator, permittee, or owner or controller, then the inspector should require as to the relationship of the named entity to the operator, permittee, and owners or controllers so listed.

In such situations, the regulatory authority should inquire to verify the identity of the permittee, the operator, and the MSHA number for the site and to otherwise determine whether information contained in the current official record of the permit remains complete and accurate.

OSM would place MSHA, AML, and EIA information files directly into AVS. Accordingly, the proposed duty of the regulatory authority to check such files can be accomplished through use of AVS. The assumption of this proposed requirement is that these other databases are updated from time to time, based on periodic reports submitted by the permittee or other operator. The proposed annual check of such information would help to assure that the regulatory authority is aware of changes relating to ownership and control relationships which are reported to and developed by the three Federal agencies.

Paragraph (b) of proposed § 773.27 would provide that if, after conducting an on-site inquiry and checking the MSHA, EIA, and AML databases, the regulatory authority identifies any potential omissions, inaccuracies, or inconsistencies in the information previously provided in the permit application, or the regulatory authority identifies a change to such information, the regulatory authority would be required to take one or more of the actions delineated in paragraph (b)(1).

Paragraph (b)(1) of proposed § 773.27 would require the regulatory authority, in all cases, to promptly contact the permittee and require expeditious resolution of the matter through one of the more actions listed in paragraphs (b)(1)(i)–(b)(1)(iv). The decision as to the appropriate action or actions to resolve a particular matter would be based upon the facts of a given situation.

Paragraph (b)(1)(i) would allow the regulatory authority to require, as a basis for resolution, that the permittee submit a satisfactory explanation which includes credible information to demonstrate that no actual omission, inaccuracy, or inconsistency existed at the time of permit issuance and that no subsequent change to such information has occurred.

Credible information could include the types of documentation presented in support of challenges to ownership or control links or to the status of violations as provided by proposed § 773.26. Such information would be submitted in this case, however, to make the demonstration required by paragraph (b)(1)(i) of proposed § 773.27

Paragraph (b)(1)(ii) of proposed § 773.27 would provide that resolution of the apparent omission, inaccuracy, or inconsistency could include, if appropriate, amendment of the regulatory authority's current official record of the permit. Such amendments would be appropriate, for example, to correct the MSHA member for the site or to update the permittee's or operator's mailing address. They would not be appropriate to document changes in ownership or control, which are discussed under paragraph (b)(1)(iv) below.

Under paragraph (b)(1)(iii) of proposed § 773.27, resolution of the apparent omission, inaccuracy, or inconsistency would include remedial action as provided by 30 CFR 773.20(c) in situations where complete and accurate information would have precluded issuance of the permit under 30 CFR 773.15(b). In a situation covered by paragraph (b)(1)(iii), the facts in existence at the time of permit issuance would have required a denial of the permit application had such facts been known. Accordingly, the regulatory authority would treat the permit as having been improvidently issued and would apply the remedial measures contained at 30 CFR 773.20(c).

Paragraph (b)(1)(iv) of proposed § 773.27 would require that resolution of the apparent omission, inaccuracy, or inconsistency include enforcement action under 30 CFR 843.11 or 843.12, or the State program equivalent, where there has been an attempt to change the permittee, operator, or other owner or controller of the surface coal mining operation without the written approval of the regulatory authority.

Under 30 CFR 774.17(a), "(n)o transfer, assignment, or sale of permit rights may be made" without such prior approval. The term, "transfer, assignment, or sale of permit rights" is defined in 30 CFR 701.5 to include any "change in ownership or other effective control over the right to conduct surface coal mining operations under a permit * * *." Since prior written approval is required, the proposed rule refers to an unapproved transfer, assignment, or sale as an "attempt to change the permittee, operator, or other owner or controller,"

even though a *de facto* change may have occurred on the mine site.

An unapproved transfer, assignment, or sale of permit rights does not relieve the approved permittee or operator (and their owners or controllers) of responsibility for the surface coal mining operation. Moreover, such unapproved change constitutes a violation of the approved permit and the regulatory program. Finally, any unapproved permittee or operator would be conducting surface coal mining operations without a permit.

Thus, where an unapproved change has occurred, the regulatory authority would be required by paragraph (b)(1)(iv) of proposed § 773.27 to issue a notice of violation to the approved permittee, requiring the submission of an application for a transfer, assignment, or sale of permit rights. The regulatory authority would also be required to issue a cessation order to any unapproved permittee or operator conducting mining operations on the site.

Paragraph (b)(2) of proposed § 773.27 would require that the regulatory authority also take action, where appropriate, in accordance with the provisions of proposed § 843.23 or the State program equivalent. Such action would impose sanctions, where appropriate, for knowing omissions or inaccuracies in the submission of ownership or control and violation information to the regulatory authority. The provisions of proposed § 843.23 are discussed below in this Preamble in detail.

N. Section 778.13—Identification of Interests

The provisions of paragraphs (c) and (d) of 30 CFR 778.13 would be revised to clarify that permit applicants are required to disclose relevant information with respect to both "deemed" and "presumed" owners or controllers within the meaning of the definitions of "owned or controlled" and "owns or controls" under 30 CFR 773.5 (a) and (b), respectively.

In 30 CFR 773.5(a), the regulations set forth three categories of persons who are deemed to be owners or controllers of a surface coal mining operation. In 30 CFR 773.5(b), the regulations set forth six categories of persons who are presumed to be owners or controllers.

Under current 30 CFR 778.13 (c)–(d), it is clear than an applicant is required to identify those ownership or control relationships covered by § 773.5(a). The question has occasionally arisen, however, whether an applicant is also required to identify all presumed ownership or control relationships covered by § 773.5(b), or only those presumed relationships which, in the applicant's opinion, are not rebutted.

The proposed changes to § 778.13 (c)–(d) would make it clear that all presumed ownership or control relationships must be identified, even if the applicant believes it will be able to rebut the presumption of ownership or control with respect to one or more of the relationships. This approach is consistent with the explanation of current § 778.13(c) in the preamble to that rule. See 54 FR 8984 (1989).

O. Section 778.14—Violation Information

The introductory language contained in paragraph (c) of 30 CFR 778.14 would be amended to require a permit applicant to disclose "all violation notices" received by the applicant within the preceding three years. In addition, the introductory language would be amended to require the disclosure of all outstanding violation notices for any surface coal mining operation that is deemed or presumed to be owned or controlled by either the applicant or by any person who is deemed or presumed to own or control the applicant under definitions of "owned or controlled" or "owns or controls" under 30 CFR 773.5.

The current regulation requires the applicant to disclose violations of a number of various laws listed in 30 CFR 778.14(c). Use of the proposed amended definition of "violation notice" from 30 CFR 773.5 would obviate the need for this list.

The current regulation further requires that the applicant provide only a list of unabated cessation orders and unabated air and water quality violation notices received prior to the date of the application by any surface coal mining and reclamation operation owned or controlled by either the applicant or by any person who owns or controls the applicant. With respect to this second list, the current regulation does not require that an applicant list notices of violation received or unpaid penalties or fees incurred by any surface coal mining operation owned or controlled by the applicant or by any person who owns or controls the applicant.

In litigation relating to §§ 778.14, 773.15(b)(1), and related matters before the U.S. District Court of the District of Columbia, the Secretary advised the court that he had decided to reconsider § 778.14(c). The Secretary stated that he intended to propose a regulation "which considers the extent to which violation information should be reported concerning owners and controllers of applicants as well as entities owned or controlled by the applicant." See *National Wildlife Fed'n* v. *Lujan*, No. 88–3117–AER (D.D.C.), Memorandum of Points and Authorities in Support of the Federal Defendants' Cross-Motion for Summary Judgment and in Opposition to Plaintiffs' Motions for Summary Judgment, footnote 33, at page 90.

Consistent with the representation made to the court, the proposed amendment to paragraph (c) of § 778.14 would require an applicant to disclose all outstanding violation notices received by any surface coal mining operation that is deemed or presumed to be owned or controlled by either the applicant or any person who is deemed or presumed to own or control the appplicant.

P. Section 840.13—Enforcement Authority

Paragraph (b) of 30 CFR 840.13 would be amended to include proposed § 843.23, Sanctions for knowing omissions or inaccuracies in ownership or control and violation information, as an enforcement provision whose stringency must be matched by State programs.

Q. Part 843—Table of Contents

OSM proposes to amend the Table of Contents of 30 CFR part 843 to add, in numerical order, proposed regulations for the Federal enforcement of the proposed AVS-related regulations. The proposed additions would include § 843.23, Sanctions for knowing omissions or inaccuracies in ownership or control and violation information, and § 843.24, Oversight of State permitting decisions with respect to ownership or control of the status of violations.

R. Section 843.10—Information Collection

The proposed rule would remove existing § 843.10 since part 843 does not contain any information collection requirements which require approval by the Office of Management and Budget under 44 U.S.C. 3507. The references to §§ 843.14(c) and 843.16 currently in § 843.10 do not represent information collection requirements. The requirement in § 843.14(c) for OSM to furnish copies of notices and orders to the State regulatory authority and to any person having an interest does not require OMB approval because the obligation to provide the information is imposed upon OSM and not upon the State or upon a member of the public. Section 843.16 merely informs the public of the right to file an application for review and request a hearing under 43 CFR part 4.

S. Section 843.23—Sanctions for Knowing Omissions or Inaccuracies in Ownership or Control and Violation Information

Proposed § 843.23 is designed to respond to those circumstances in which there has been a knowing failure to provide the regulatory authority with complete and accurate ownership and control or violation information in an application or other document submitted pursuant to parts 773 and 778 of Title 30.

Pursuant to section 201(c)(2) of SMCRA, the Secretary, acting through OSM, is authorized to "publish and promulgate such rules and regulations as may be necessary to carry out the purposes and provisions of this Act". Proposed § 843.23 is designed "to carry out the purposes" of sections 507(b)(4), 510(b), 510(c), and 518(g) of SMCRA. The proposed section would deter and punish the intentional failure to provide the complete and accurate ownership and control information required by sections 507(b)(4) and 510(b)–(c). It would further implement the criminal provisions of section 518(g) where appropriate.

OSM recognizes that ownership and control relationships can be complicated. There may be honest disagreements among reasonable people as to whether the facts of a particular matter establish an ownership and control relationship. In submitting information to a regulatory authority, people acting in good faith may inadvertently fail to provide complete or completely accurate information. The sanctions of proposed § 843.23 are not designed for such situations. The sanctions are designed to respond to situations of knowing concealment or deception.

Under paragraph (a)(1) of proposed § 843.23, OSM would determine whether omissions or inaccuracies contained in an application or otherwise provided pursuant to 30 CFR parts 773 and 778 were the result of a "knowing failure" to provide complete and accurate information.

Under the proposed regulation, a knowing failure would include any knowing submission of false information and any failure by a person to provide complete and accurate information where the person knew or had reason to know that such failure could mislead OSM as to the facts of ownership or control relevant to a surface coal mining operation or the status of any violation. OSM would examine the totality of the circumstances to determine what an individual knew or had reason to know when he or she supplied false information.

Paragraph (a)(2) of proposed § 843.23 would reaffirm the principle that the knowing failure to provide complete and accurate information to OSM is a violation of the Act. See sections 507(b)(4), 510(b), 510(c), and 518(g) of SMCRA.

Paragraph (b)(1) of proposed § 843.23 would require OSM to impose sanctions promptly in the event that OSM determines that a person knowingly failed to provide complete and accurate ownership and control or violation information. The proposed sanctions include denial of a permit for failure to comply with 30 CFR 773.15(b); issuance of a notice of violation, along with assessment of an appropriate civil penalty; and criminal prosecution under section 518(g) of SMCRA which is codified as 30 U.S.C. 1268(g). An "appropriate civil penalty" could include, where the circumstances indicate, the assessment of an individual civil penalty.

Paragraph (b)(2) of proposed § 843.23 would provide that any sanctions to be imposed under paragraph (b)(1) would be in addition to any actions taken by OSM under the provisions of paragraphs (b)(1)(iii)–(iv) of proposed § 773.27. The provisions of proposed § 773.27 are discussed in detail in this Preamble above.

OSM would choose the appropriate sanction or combination of sanctions based upon the facts of a particular case. Further, the choice of one of the listed sanctions does not preclude imposition of the other listed sanctions. The egregiousness of the behavior to which sanctions are to be applied and OSM's ability to prove such behavior before a reviewing tribunal would be factors in the choice of sanctions to be imposed.

T. Section 843.24—Oversight of State Permitting Decisions With Respect to Ownership or Control or the Status of Violations

Proposed § 843.24 would provide standards for OSM's oversight of State permitting decisions with respect to ownership or control or the status of violations.

Paragraph (a) of proposed § 843.24 would establish the bases which would require OSM to take action under the provisions of paragraphs (b) and (c) of proposed § 843.24.

Paragraph (a)(1) of proposed § 843.24 would provide that OSM would be required to take action whenever it determined, through its oversight of the implementation of State programs, that a State had issued a permit without complying with the State program equivalents of proposed §§ 773.22 (verification of ownership or control application information), 773.23 (review of ownership or control and violation information), 773.24 (procedures for challenging ownership or control links in AVS), 773.26 (standards for challenging ownership or control links and the status of violations), and 843.23 (sanctions for knowing omissions or inaccuracies in ownership or control and violation information).

Paragraph (a)(2) of proposed § 843.24 would provide that OSM would be required to take action whenever it determined, through its oversight of the implementation of State programs, that a State had failed in a systemic manner to comply with the State program equivalent of proposed § 773.27 (periodic check of ownership or control information).

Paragraph (a)(2) of proposed § 843.24 would define *failure to comply in a systemic manner* to include a continuing pattern of noncompliance by a State, or one of more instances of noncompliance that result from or evidence a legal or policy decision which the State intends to apply to similar cases.

In substance, OSM would look to whether the State has repeatedly failed to comply with the duty which would be imposed by proposed § 773.27 to check periodically that ownership and control information with respect to an issued permit is accurate and current. Isolated failures by the State to comply would not lead to remedial action under paragraph (c), unless such failures indicate that the State has made a policy decision not to comply in the future.

Under paragraph (a) of proposed § 843.24, a State's isolated failure to comply, with proposed § 773.27 (periodic check of ownership and control information) would be treated differently from isolated failures to comply with the proposed regulations listed in paragraph (a)(1) of proposed § 843.24.

The basis for this differing treatment reflects OSM's belief that the State's actions and decisions prior to issuing a permit are of primary importance. Prior to the issuance of a permit, an applicant has no legal right to engage in surface coal mining and has no opportunity to damage the environment. This is the point in time when risks to the environment can be dramatically reduced in the most economical manner by the State's use of AVS and complete research of ownership and control and violation information. Thus, OSM would use the remedial measures of proposed § 843.24(c) to address even isolated instances of a State's non-compliance

with the regulations listed in paragraph (a)(1) of proposed § 843.24.

On the other hand, when a permit has been issued following the research required by the regulations listed in paragraph (a)(1) of proposed § 843.21, there would have been an informed determination that the permittee represents a "good risk" to engage in lawful surface mining and reclamation. The periodic subsequent checking of ownership or control information which would be required by proposed § 773.27 would still be important. A *clean* permittee may be hiding a wrong-doing operator who can appear on the site later. Nevertheless, the level of potential risk would have been reduced by the full research which would precede permit issuance.

Accordingly, OSM proposes to employ the provisions of proposed 30 CFR 843.24(c) only with respect to proposed § 773.27 when the State's compliance failures under proposed § 773.27 are systemic.

If, as a result of the determination made under paragraph (a) of proposed § 843.24, OSM has reason to believe that the State has issued a permit improvidently within the meaning of 30 CFR 773.20, paragraph (b) of proposed § 843.24 would require OSM to initiate action under 30 CFR 843.21.

The State's failure to comply with the proposed rules in reviewing and rendering a decision on a permit application would significantly increase the chances that the permit was improvidently granted. If in fact the improvidently issued permit criteria of 30 CFR 773.20 are met, OSM would initiate remedial action under 30 CFR 843.21.

On the other hand, the State's failure to comply with the proposed rules would not automatically mean that the permit was improvidently issued. In some cases, full compliance with the proposed rules would have confirmed that the applicant was eligible to receive a permit. Thus, before OSM took action under 30 CFR 843.21, OSM would investigate the facts of each case to determine whether the permit should or should not have been issued.

Paragraph (c) of proposed § 843.24 would provide for remedial actions by OSM against a State which does not comply with the proposed regulations relating to ownership or control and violation information during the permit application process. Such actions would be applied where the State has knowingly failed to comply with the State program equivalents of §§ 773.22 (verification of ownership or control application information), 773.23 (review of ownership or control and violation information), 773.24 (procedures for challenging ownership or control links in AVS), 773.26 (standards for challenging ownership or control links and the status of violations), or 843.23 (sanctions for knowing omissions or inaccuracies in ownership or control and violation information), or where the State has failed in a systemic manner to comply with § 773.27 (periodic check of ownership and control information).

The remedial actions against a non-complying State could include grant reduction or termination under 30 CFR 735.21 or 30 CFR 886.18 and the substitution of Federal enforcement or other action pursuant to 30 CFR 733.12(b). Such remedial actions would not be used where the State's actions were mandated by court order or where the State has not knowingly failed to comply.

The determination of what constitutes a State's "knowing" behavior would be made based upon a full consideration of the facts. In substance, the issue would be whether the State knew or had reason to know that its actions constituted a failure to comply with the proposed AVS-related regulations.

IV. Procedural Matters

Effect of the Rule in Federal Program States and on Indian Lands

The proposed revisions, if adopted, will apply through cross-referencing in those States with Federal programs: California, Georgia, Idaho, Massachusetts, Michigan, North Carolina, Oregon, Rhode Island, South Dakota, Tennessee, and Washington. The Federal programs for these States appear at 30 CFR parts 905, 910, 912, 921, 922, 933, 937, 939, 941, 942, and 947, respectively. The proposed rule, if adopted will also apply through cross-referencing to Indian lands under the Federal program for Indian lands as provided in 30 CFR part 750. Comments are specifically solicited as to whether unique conditions exist in any of these Federal program States or on Indian lands relating to this proposal which should be reflected either as changes to the national rules or as specific amendments to any or all of the Federal programs or the Indian lands program.

Effects of the Rule on State Programs

The provisions of section 503(a)(1) of the Act require that State laws regulating surface coal mining and reclamation operations be "in accordance with" the requirements of the Act. Further, section 503(a)(7) of the Act requires that State programs contain rules and regulations "consistent with" regulations issued by the Secretary pursuant to the Act.

These terms are defined by § 730.5 of title 30 of the Code of Federal Regulations to require that State programs contain procedures which are, with respect to the Act, no less stringent than the Act; and with respect to the Secretary's regulations, no less effective than the Secretary's regulations in meeting the requirements of the Act.

If the proposed rules are adopted, OSM will then evaluate State programs to determine whether any changes in these programs will be necessary. If OSM determines that any State program provisions should be amended to be made no less effective that the revised Federal rules, the individual States will be notified in accordance with the provisions of 30 CFR 732.17.

Various provisions of the proposed rules contain specific references to "State program equivalents" of the proposed rules. The inclusion of such references in some provisions is not meant to imply that State program amendments will not be required for other provisions as well.

Federal Paperwork Reduction Act

The collection of information contained in this rule has been submitted to the Office of Management and Budget as required by 44 U.S.C. 3501 *et seq.* The collection of this information will not be required until it has been approved by the Office of Management and Budget.

Public reporting burden for this collection of information is estimated to average 11.5 hours per response, including the time for reviewing instructions, searching existing data sources, gathering and maintaining the data needed, and completing and reviewing the collection of information. Send comments regarding this burden estimate to Information Collection Clearance Officer, Office of Surface Mining Reclamation and Enforcement (OSM), 1951 Constitution Ave., room 5415 L, Washington, DC 20240 and the Office of Management and Budget, Paperwork Reduction Project (1029–0041) (1029–0034), Washington, DC 20503.

Executive Order 12291 and Regulatory Flexibility Act

The Department of the Interior has determined that this document is not a major rule under the criteria of Executive Order 12291 and certifies that it will not have a significant economic effect on a substantial number of small entities under the Regulatory Flexibility Act, 5 U.S.C. 601 *et seq.* The rules would

mandate that regulatory authorities use the AVS and other information resources prior to making a permitting decision. The rules would establish methods and procedural and evidentiary standards for the challenge of ownership and control links shown on AVS and for the challenge of ownership and control links prior to the entry of such information into AVS. The rules do not create the presumptions of ownership and control or links to violations which could result in the denial of a permit to mine or the rescission of an improvidently issued permit.

The economic effects of the proposed rule are not estimated to be significant because the cost of challenging the ownership or control links shown on AVS or prior to the entry of such information in AVS is estimated to average $3,300 per respondent. For Fiscal Year 1990, the total number of permit applications received nationwide was 589. Consequently, it is expected that the total cost to industry would be substantially less than the threshold criteria for determining when a rule is major. The rule does not distinguish between small and large entities. However, the cost for a small entity to refute a presumption of ownership or control should be less than the average because of its less complex business structure.

National Environmental Policy Act

OSM has prepared a draft environmental assessment (EA) of this proposed rule and has made a tentative finding that the proposed rule would not significantly affect the quality of the human environment under section 102(2)(C) of the National Environmental Policy Act of 1969 (NEPA), 42 U.S.C. 4332(2)(C). It is anticipated that a Finding of No Significant Impact (FONSI) will be approved for the final rule in accordance with OSM procedures under NEPA. The EA is on file in the OSM Administrative Record at the address specified previously (see "**ADDRESSES**"). An EA will be completed on the final rule and a finding made on the significance of any resulting impacts prior to promulgation of the final rule.

Author

The principal author of this proposed rule is Harvey P. Blank, Attorney-Adviser, Division of Surface Mining, Office of the Solicitor, U.S. Department of the Interior, 1849 C Street NW., Washington, DC 20240. Inquiries with respect to the proposed rule should be directed to Dr. Annetta L. Cheek at the address and telephone specified under "**FOR FURTHER INFORMATION CONTACT**."

List of Subjects in 30 CFR

Part 701

Surface mining and Underground mining.

Part 773

Administrative practice and procedure, Reporting and recordkeeping requirements, Permits, Surface mining, Underground mining.

Part 778

Administrative practice and procedure, Reporting and recordkeeping requirements, Permits, Surface mining, Underground mining.

Part 840

Administrative practice and procedure, Law enforcement, Surface mining, Underground mining.

Part 843

Administrative practice and procedure, Law enforcement, Surface mining, Underground mining.

Accordingly, it is proposed to amend 30 CFR parts 701, 773, 778, 840, and 843 as follows:

Dated: May 29, 1991.

David C. O'Neal,

Assistant Secretary, Land and Minerals Management.

PART 701—PERMANENT REGULATORY PROGRAM

1. The authority citation for part 701 continues to read as follows:

Authority: Pub. L. 95–87 (30 U.S.C. 1201 *et seq.*), and Pub. L. 100–34.

2. Section 701.5 is amended by removing the definition of *Violation notice.*

PART 773—REQUIREMENTS FOR PERMITS AND PERMIT PROCESSING

3–4. The authority citation for part 773 continues to read as follows:

Authority: 30 U.S.C. 1201 *et seq.*, 16 U.S.C. 470 *et seq.*, 16 U.S.C. 1531 *et seq.*, 16 U.S.C. 661 *et seq.*, 16 U.S.C. 703 *et seq.*, 16 U.S.C. 668a *et seq.*, 16 U.S.C. 469 *et seq.*, 16 U.S.C. 470aa *et seq.*, and Pub. L. 100–34.

5. Section 773.5 is amended by adding the definitions of *Applicant/Violator System*, or *AVS*, *Federal violation notice*, *Ownership* or *control link*, *State violation notice*, and *Violation notice*, in alphabetical order as follows:

§ 773.5 Definitions.

* * * * *

Applicant/Violator System or *AVS* means the computer system maintained by OSM to identify ownership or control links involving permit applicants, permittees, and persons cited in violation notices.

Federal violation notice means a violation notice issued by OSM or by another agency or instrumentality of the United States.

* * * * *

Ownership or control link means any relationship included in the definition of *owned* or *controlled* or *owns* or *controls* in this section or in the violations review provisions of § 773.15(b) of this part. It includes any relationship presumed to constitute ownership or control under paragraph (b) of the definition of *owned* or *controlled* or *owns* or *controls* in this section, unless such presumption has been successfully rebutted under the provisions of §§ 773.24 and 773.26 or §§ 773.25 and 773.26 of this part or under the provisions of part 775 of this chapter and § 773.26 of this part.

State violation notice means a violation notice issued by a State regulatory authority or by another agency or instrumentality of State government.

Violation notice means any written notification from a governmental entity, whether by letter, memorandum, legal or administrative pleading, or other written communication, of a violation of the Act, any Federal rule or regulation promulgated pursuant thereto, a State program, or any Federal or State law, rule, or regulation pertaining to air or water environmental protection in connection with a surface coal mining operation. It includes, but is not limited to, a notice of violation; an imminent harm cessation order; a failure-to-abate cessation order; a final order, bill, or demand letter pertaining to a delinquent civil penalty; a bill or demand letter pertaining to delinquent abandoned mine reclamation fees; and a notice of bond forfeiture, where one or more violations upon which the forfeiture was based have not been corrected.

6. Section 773.10 is revised to read as follows:

§ 773.10 Information collection.

The collection of information contained in 30 CFR 773.13, 773.15(b)(1), 773.17(i), 773.19(b)(1), 773.19(e)(2), 773.22(b–c), 773.24(b), 773.25(c)(1) and 773.27(a–b) have been approved by Office of Management and Budget under 44 U.S.C. 3501 *et seq.* and assigned clearance number 1029–0041. The information will be used by the regulatory authorities in processing applications. Response is required to obtain a benefit in accordance with Public Law 95–87. Public reporting burden for this collection of information is estimated to average 3 hours per

response, including the time for reviewing instructions, searching existing data sources, gathering and maintaining the data needed, and completing and reviewing the collection of information. Send comments regarding this burden estimate to OSM Information Collection Clearance Officer, 1951 Constitution Ave., room 5415 L, Washington, DC 20240 and the Office of Management and Budget, Paperwork Reduction Project (1029-0041), Washington, DC 20503.

7. Section 773.15 is amended by revising the introductory language contained in paragraph (b)(1) and adding a new paragraph (b)(4) as follows:

§ 773.15 Review of permit applications.

* * * * *

(b) *Review of violations.* (1) Based on a review of all reasonably available information concerning violation notices and ownership or control links involving the applicant, including information obtained pursuant to §§ 773.22, 773.23, 778.13, and 778.14 of this chapter, the regulatory authority shall not issue the permit, except as provided by paragraph (b)(4) of this section, if any surface coal mining and reclamation operation owned or controlled by either the applicant or by any person who owns or controls the applicant is currently in violation of the Act, any Federal rule or regulation promulgated pursuant thereto, a State program, or any Federal or State law, rule, or regulation pertaining to air or water environmental protection. If a current violation exists, the regulatory authority shall require the applicant or person who owns or controls the applicant, before the issuance of the permit, to either—

* * * * *

(4) *Delinquent civil penalties for violations cited prior to October 3, 1988.* If delinquent civil penalties exist with respect to notices of violation or cessation orders issued under the Act prior to October 3, 1988, the regulatory authority shall not deny a permit to the applicant under paragraph (b)(1) of this section if:

(i) The applicant is not the person cited in the violation notice, but is only linked to the person cited through ownership or control;

(ii) No later than 120 days after the effective date of this provision, the surface coal mining operation for which the violation notice was issued has been fully reclaimed in accordance with the provisions of the applicable regulatory program; and

(iii) With respect to each cessation order for which a delinquent civil penalty exists, the applicant pays $750 of the amount of such penalty to the regulatory authority which issued such cessation order.

* * * * *

8. Section 773.20 is amended by revising paragraphs (b) and (c) to read as follows:

§ 773.20 Improvidently issued permits: General procedures.

* * * * *

(b) *Review criteria.* (1) A regulatory authority shall find that a surface coal mining and reclamation permit was improvidently issued if—

(i) Under the violations review criteria of the regulatory program at the time the permit was issued, the regulatory authority should not have issued the permit because of an unabated violation or a delinquent penalty or fee; and

(ii) The violation, penalty, or fee:

(A) Remains unabated or delinquent; and

(B) Is not the subject of a good faith appeal, or of an abatement plan or payment schedule with which the permittee or other person responsible is complying to the satisfaction of the responsible agency; and

(iii) Where the permittee was linked to the violation, penalty, or fee through ownership or control under the violations review criteria of the regulatory program at the time the permit was issued, an ownership or control link between the permittee and the person responsible for the violation, penalty, or fee still exists, or where the link has been severed, the permittee continues to be responsible for the violation, penalty, or fee.

(2) The provisions of § 773.26 of this part shall be applicable when a regulatory authority determines—

(i) Whether a violation, penalty, or fee remains unabated or delinquent, has been corrected, is in the process of being corrected, or is the subject of a good faith appeal, and

(ii) Whether any ownership or control link between the permittee and the person responsible for the violation, penalty, or fee existed, still exists, or has been severed.

(c) *Remedial measures.* (1) A regulatory authority which, under paragraph (b) of this section, finds that because of an unabated violation or a delinquent penalty or fee a permit was improvidently issued shall use one or more of the following remedial measures:

(i) Implement, with the cooperation of the permittee or other person responsible, and of the responsible agency, a plan for abatement of the violation or a schedule for payment of the penalty or fee;

(ii) Impose on the permit a condition requiring that in a reasonable time the permittee or other person responsible abate the violation or pay the penalty or fee;

(iii) Suspend the permit until the violation is abated or the penalty or fee is paid; or

(iv) Rescind the permit.

(2) If the regulatory authority decides to suspend the permit, it shall afford at least 30 days' written notice to the permittee. If the regulatory authority decides to rescind the permit, it shall issue a notice in accordance with § 773.21 of this part. In either case, the permittee shall be given the opportunity to request administrative review of the notice under 43 CFR 4.1370 *et seq.*, where OSM is the regulatory authority, or under the State program equivalent, where a State is the regulatory authority. The regulatory authority's decision shall remain in effect during the pendency of the appeal, unless temporary relief is granted in accordance with 43 CFR 4.1376 or the State program equivalent.

9. Section 773.21 is amended by revising the introductory language contained in paragraph (a) to read as follows:

§ 773.21 Improvidently issued permits: Rescission procedures.

* * * * *

(a) *Automatic suspension and rescission.* After a specified period of time not to exceed 90 days the permit automatically will become suspended, and not to exceed 90 days thereafter rescinded, unless within those periods the permittee submits proof, and the regulatory authority finds, consistent with the provisions of § 773.26 of this part, that—

* * * * *

773.21 [Amended]

10. Section 773.21 is amended by deleting paragraph (c).

11. Section 773.22 is added as follows:

§ 773.22 Verification of ownership or control application information.

(a) In accordance with § 773.15(c)(1) of this part, prior to the issuance of a permit, the regulatory authority shall review the information provided in the application pursuant to § 778.13 of this chapter to determine that such information, including the identification of the operator and all owners and controllers of the operator, is complete and accurate. In making such determination, the regulatory authority shall compare the information provided in the application with information from

other reasonably available sources, including—

(1) Manual data sources within the State in which the regulatory authority exercises jurisdiction, including—

(i) The regulatory authority's inspection and enforcement records and

(ii) State corporation commission or tax records to the extent they contain information concerning ownership or control links; and

(2) Automated data sources, including—

(i) The regulatory authority's own computer systems and

(ii) The Applicant/Violator System.

(b) If it appears from the information provided in the application pursuant to § 778.13 (c) and (d) of this chapter that none of the persons identified in the application has had any previous mining experience, the regulatory authority shall inquire of the applicant whether any person other than those identified in the application will own or control the operation (as either an operator or other owner or controller).

(c) If, as a result of the review conducted under paragraphs (a) and (b) of this section, the regulatory authority identifies any potential omission, inaccuracy, or inconsistency in the ownership or control information provided in the application, it shall, prior to making a final determination with regard to the application, contact the applicant and require that the matter be resolved through submission of—

(1) An amendment to the application or

(2) A satisfactory explanation which includes credible information sufficient to demonstrate that no actual omission, inaccuracy, or inconsistency exists. The regulatory authority shall also take action in accordance with the provisions of § 843.23 of this chapter (or the State program equivalent), where appropriate.

(d) Upon completion of the review conducted under this section, the regulatory authority shall promptly enter all ownership or control information into AVS.

12. Section 773.23 is added as follows:

§ 773.23 Review of ownership or control and violation information.

(a) Following the verification of ownership or control information pursuant to § 773.22 of this part, the regulatory authority shall review all reasonably available information concerning violation notices and ownership or control links involving the applicant to determine whether the application can be approved under § 773.15(b) of this part. Such information shall include—

(1) With respect to ownership or control links involving the applicant, all information obtained under §§ 773.22 and 778.13 of this chapter; and

(2) With respect to violation notices, all information obtained under § 778.14 of this chapter, information obtained from OSM, including information shown in the AVS, and information from the regulatory authority's own records concerning violation notices.

(b) If the review conducted under paragraph (a) of this section discloses any ownership or control link between the applicant and any person cited in a violation notice—

(1) The regulatory authority shall so notify the applicant and shall refer the applicant to the agency with jurisdiction over such violation notice; and

(2) The regulatory authority shall not approve the application unless and until it determines, in accordance with the provisions of §§ 773.24 and 773.26 of this part (or the State program equivalent),

(i) That all ownership or control links between the applicant and any person cited in a violation notice are erroneous or have been rebutted, or

(ii) That the violation has been corrected, is in the process of being corrected, or is the subject of a good faith appeal, within the meaning of § 773.15(b)(1) of this part (or the State program equivalent).

(c) Following the regulatory authority's decision on the application (including unconditional issuance, conditional issuance, or denial of the permit) or following the applicant's withdrawal of the application, the regulatory authority shall promptly enter all relevant information related to such decision or withdrawal into AVS.

13. Section 773.24 is added as follows;

§ 773.24 Procedures for challenging ownership or control links shown in AVS.

(a)(1) Any applicant or other person shown in AVS in an ownership or control link to any person cited in a Federal or State violation notice may challenge such link in accordance with the provisions of paragraphs (b) through (d) of this section and § 773.26 of this part, unless such applicant or other person is bound by a prior administrative or judicial determination concerning the link.

(2) Any applicant or other person shown in AVS in an ownership or control link to any person cited in a Federal violation notice may challenge the status of the violation covered by such notice in accordance with provisions of paragraphs (b) through (d) of this section and § 773.26 of this part, unless such applicant or other person is bound by a prior administrative or judicial determination concerning the status of the violation.

(3) Any applicant or other person shown in AVS in an ownership or control link to any person cited in a State violation notice may challenge the status of the violation covered by such notice in accordance with the State program equivalents to paragraphs (b) through (d) of this section and § 773.26 of this part for the State that issued the violation notice, unless such applicant or other person is bound by a prior administrative or judicial determination concerning the status of the violation.

(b) Any application or other person who wishes to challenge an ownership or control link or the status of a violation, and who is eligible to do so under the provisions of paragraphs (a)(1) or (a)(2) of this section, shall submit a written explanation of the basis for the challenge, along with any relevant evidentiary materials and supporting documents, to OSM, addressed to the Chief of the AVS Office, Mail Stop 7424, Office of Surface Mining, U.S. Department of the Interior, 1849 C Street, NW., Washington, DC 20240.

(c) OSM shall review any information submitted under paragraph (b) of this section and shall make a written decision whether or not the ownership or control link has been shown to be erroneous or has been rebutted and/or whether the violation covered by the notice remains outstanding, has been corrected, is in the process of being corrected, or is the subject of a good faith appeal within the meaning of § 773.15(b)(1) of this part.

(d)(1) If, as a result of the decision reached under paragraph (c) of this section, OSM determines that the ownership or control link has been shown to be erroneous or has been rebutted and/or that the violation covered by the notice has been corrected, is in the process of being corrected, or is the subject of a good faith appeal, OSM shall so notify the applicant or other person and, if an application is pending, the regulatory authority, and shall correct the information in AVS.

(2) If, as a result of the decision reached under paragraph (c) of this section, OSM determines that the ownership or control link has not been shown to be erroneous and has not been rebutted and that the violation covered by the notice remains outstanding, OSM shall so notify the applicant or other person and, if an application is pending, the regulatory authority, and shall update the information in AVS, if necessary.

(i) OSM shall serve a copy of the decision on the applicant or other person by certified mail, or by any means consistent with the rules governing service of a summons and complaint under Rule 4 of the Federal Rules of Civil Procedure. Service shall be complete upon tender of the notice or of the mail and shall not be deemed incomplete because of a refusal to accept.

(ii) The applicant or other person may appeal OSM's decision to the Department of Interior's Office of Hearings and Appeals within 30 days of service of the decision in accordance with 43 CFR 4.1380 *et seq.* OSM's decision shall remain in effect during the pendency of the appeal, unless temporary relief is granted in accordance with 43 CFR 4.1386.

14. Section 773.25 is added as follows:

§ 773.25 Procedures for challenging ownership or control links prior to entry in AVS.

(a)(1) Except as provided in paragraph (a)(2) of this section, the provisions of paragraphs (b) through (d) of this section shall apply whenever—

(i) OSM identifies an ownership or control link between—

(A) A person who has owned or controlled a surface coal mining and reclamation operation that has been active within the previous 12 months and

(B) Any person cited in a Federal violation notice, if such link has not previously been entered into AVS; or

(ii) A State regulatory authority identifies an ownership or control link between—

(A) A person who has owned or controlled a surface coal mining and reclamation operation that has been active within the previous 12 months and

(B) Any person cited in a State violation notice from the State that identified the link, if such link has not previously been entered into AVS.

(2) The provisions of paragraphs (b) through (d) of this section shall not apply to any ownership or control link identified as a result of the application review process set forth in §§ 773.15(b), 773.22, and 773.23 of this part or the improvidently issued permit process set forth in §§ 773.20 and 773.21 of this part and § 843.21 of this chapter.

(b) Prior to entering into AVS any ownership or control link described in paragraph (a)(1) of this section, the agency that identified the link (OSM or the State regulatory authority) shall provide written notice to the person of the existence of the link and of the opportunity provided in paragraph (c) of this section to challenge such link or the status of the violation. The notice shall be served on the person certified mail, or by any means consistent with the rules governing service of a summons and complaint under Rule 4 of the Federal Rules of Civil Procedure. Service shall be complete upon tender of the notice or of the mail and shall not be deemed incomplete because of a refusal to accept.

(c)(1) If the person served wishes to challenge the ownership or control link and/or the status of the violation, he or she shall submit a written explanation of the basis for the challenge, along with any relevant evidentiary materials and supporting documents, to the agency providing such notice, within 30 days of service of the notice. No such challenge may be instituted by a person who is bound by a prior administrative or judicial determination concerning the matter.

(2) Where the agency providing such notice is OSM, the written explanation shall be sent to the address set forth in § 773.24(b) of this part. OSM shall make a decision with respect to such challenge in accordance with the provisions of §§ 773.24(c) and 773.26 of this part; and the person served may appeal OSM's decision, if adverse, in accordance with the provisions of § 773.24(d) of this part.

(3) Where the agency providing such notice is a State regulatory authority, the State program equivalents to §§ 773.24(b)–(d) and 773.26 of this part shall apply.

(d) If no written explanation is provided within 30 days of service of the notice under paragraphs (b) and (c) of this section or if, as a result of the decision reached under paragraph (c) of this section, OSM or the State regulatory authority determines that the ownership or control link has not been shown to be erroneous and has not been rebutted and that the violation covered by the notice remains outstanding, the agency shall promptly enter the information identifying the link into AVS, unless temporary relief has been granted in accordance with 43 CFR 4.1386 (or the State program equivalent).

15. Section 773.26 is added as follows:

§ 773.26 Standards for challenging ownership or control links and the status of violations.

(a) The provisions of this section shall apply whenever a person has and exercises a right, under the provisions of §§ 773.20, 773.21, 773.23, 773.24, or 773.25 of this part or under the provisions of part 775 of this chapter, to challenge—

(1) An ownership or control link to any person cited in a violation notice and/or

(2) The status of the violation covered by such notice.

(b) *Agencies responsible.* (1) Except as provided in paragraph (b)(3) of this section—

(i) The regulatory authority before which an application is pending shall have authority for making decisions with respect to the ownership or control of the applicant.

(ii) The regulatory authority that issued a permit shall have authority for making decisions with respect to the ownership or control of the permittee.

(iii) The State regulatory authority for the State that issued a State violation notice shall have authority for making decisions with respect to the ownership or control of any person cited in such notice.

(iv) The regulatory agency that issued a violation notice, whether State or Federal, shall have authority for making decisions concerning the status of the violation covered by such notice, i.e., whether the violation remains outstanding, has been corrected, is in the process of being corrected, or is the subject of a good faith appeal, within the meaning of § 773.15(b)(1) of this part.

(2) OSM shall have authority for making decisions with respect to the ownership or control of any person cited in a Federal violation notice.

(3) The authority referred to in paragraph (b)(1) of this section shall be subject to the authority of OSM to review any State regulatory authority decision regarding an ownership or control link or the status of a violation as an element of State program oversight under parts 733, 842, and 843 of this chapter. Where OSM disagrees with the decision, it shall take action under § 843.24 of this chapter, as appropriate.

(c) *Evidentiary Standards.* (1) In any formal or informal review of an ownership or control link to a person cited in a violation notice or of the status of a violation covered by such notice, the responsible agency shall make a prima facie determination or showing that such link exists and/or that the violation covered by such notice remains outstanding. Once such a prima facie determination or showing has been made, the person challenging such link or the status of the violation shall have the burden of proving by a preponderance of the evidence, with respect to any relevant time period—

(i) That the facts relied upon by the responsible agency to establish—

(A) Ownership or control under paragraph (a) of the definition of *owned or controlled* or *owns or controls* in § 773.5 of this part or

(B) A presumption of ownership or control under paragraph (b) of the definition of *owned or controlled* or *owns or controls* in § 773.5 of this part, do not or did not exist;

(ii) That a person subject to a presumption of ownership or control under paragraph (b) of the definition of "owned or controlled" or "owns or controls" in § 773.5 of this part, does not or did in fact have the authority directly or indirectly to determine the manner in which surface coal mining operations are or were conducted, in accordance with the provisions of paragraph (d) of this section; or

(iii) That the violation covered by the violation notice did not exist, has been corrected, is in the process of being corrected, or is the subject of a good faith appeal within the meaning of § 773.15(b)(1) of this section; *provided* that the existence of the violation may not be challenged under the provisions §§ 773.24 or 773.25 of this part, nor by any person who had a prior opportunity to challenge the violation notice and who failed to do so in a timely manner, nor by any person who is bound by a prior administrative or judicial determination concerning the existence of the violation.

(2) In meeting the burden of proof set forth in paragraph (c)(1) of this section, the person challenging the ownership or control link or the status of the violation shall present probative, reliable, and substantial evidence and any supporting explanatory materials, which may include—

(i) Before the responsible agency—

(A) Affidavits setting forth specific facts concerning the scope of responsibility of the various owners or controllers of an applicant, permittee, or any person cited in a violation notice; the duties actually performed by such owners or controllers; the beginning and ending dates of such owners' or controllers' affiliation with the applicant, permittee, or person cited in a violation notice; and the nature and details of any transaction creating or severing an ownership or control link; or specific facts concerning the status of the violation;

(B) Certified copies of corporate minutes, stock ledgers, contracts, purchase and sale agreements, leases, correspondence, or other relevant company records;

(C) Certified copies of documents filed with or issued by any State, Municipal, or Federal governmental agency; and

(D) An opinion of counsel, when supported by evidentiary materials and when rendered by counsel who certifies that he or she has personally and diligently investigated the facts of the matter and that he or she is qualified to render the opinion.

(ii) Before any administrative or judicial tribunal reviewing the decision of the responsible agency, any evidence admissible under the rules of such tribunal.

(d) *Required proof for the rebuttal of ownership or control presumptions.* The following proof shall be required to rebut any presumption of ownership or control under paragraph (b) of the definition of "owned or controlled" or "owns or controls" in § 773.5 of this part:

(1) With respect to a presumed owner or controller of an applicant (except as provided in paragraph (d)(4) of this section), proof that the person subject to the presumption does not and will not have the authority directly or indirectly to determine the manner in which the relevant surface coal mining operation will be conducted, and that such authority is or will be exercised by one or more other persons to the exclusion of the presumed owner or controller.

(2) With respect to a presumed owner or controller of a permittee (except as provided in paragraph (d)(4) of this section, proof that, at the time the permit was issued, the person subject to the presumption did not have the authority directly or indirectly to determine the manner in which the relevant surface coal mining operation would be conducted, and that such authority was to be exercised by one or more other persons to the exclusion of the presumed owner or controller.

(3) With respect to a presumed owner or controller of a person cited in a violation notice, proof as follows:

(i) *For a present or former officer of an entity,* proof—

(A) That the officer does not and did not have authority or demonstrated control over the conduct of the surface coal mining operation, including the ability to cause the abatement of violations, nor any level of supervisory responsibility over a person having such authority or control, or

(B) That the officer has taken all reasonable steps within his or her legal authority to bring about abatement of the violation, but that such abatement has been prevented by the person or persons who have or had actual authority or control over the conduct of the surface coal mining operation.

(ii) *For a former owner of 10 through 50 percent of an entity,* proof—

(A) That the owner did not know of the violation at the surface coal mining operation and should not, considering all of the circumstances of the entity's method of operation, be expected to have known of such violation, or

(B) That the owner took all reasonable steps within his or her legal authority to bring about abatement of the violation, but that such abatement was prevented by the person or persons who had actual authority or control over the conduct of the surface coal mining operation.

(iii) *For a present or former director or general partner or a present owner of 10 through 50 percent of an entity,* proof that the director, general partner, or owner has taken all reasonable steps within his or her legal authority to bring about abatement of the violation, but that such abatement has been prevented by the person or persons who have or had actual authority or control over the conduct of the surface coal mining operation.

(iv) *For a present or former operator of a surface coal mining operation,* proof that the violation was caused by the permittee or other person or persons who have or had actual authority or control over a portion of the surface coal mining operation, to the exclusion of the operator.

(v) *For a person with present or former authority to commit the assets or working resources of an entity,* proof that the person has taken all reasonable steps within his or her legal authority to bring about abatement of the violation, but that such abatement has been prevented by the person or persons who have or had actual authority or control over the conduct of the surface coal mining operation.

(vi) *For a person presently or formerly owning or controlling coal to be mined by another person under a lease, sublease, or other contract and having the right to receive such coal after mining or having authority to determine the manner in which the surface coal mining operation is or was conducted,* proof—

(A) That the person in fact does not and did not have the authority directly or indirectly to determine the manner in which the relevant surface coal mining operation is or was conducted, and that such authority is or was exercised by one or more other persons to the exclusion of the person owing or controlling the coal, or

(B) That the person has taken all reasonable steps within his or her legal authority to bring about abatement of the violation, but that such abatement has been prevented by the person or persons who have or had actual

authority or control over the conduct of the surface coal mining operation.

(4) Where the person cited in a violation notice is itself the applicant or permittee, the ownership or control of such person with respect to the violation notice shall be determined under the provisions of paragraph (d)(3) of this section, rather than under the provisions of paragraph (d)(1) or (d)(2) of this section.

(5) Proof under paragraphs (d)(1) through (d)(3) of this section that one or more other persons exercised the authority to determine the manner in which a surface coal mining operation was conducted, to the exclusion of the presumed owner or controller, or that abatement was prevented by such other persons shall include identification of the other persons who exercised such authority or prevented abatement and specific facts demonstrating how such other persons exercised such authority to the exclusion of the presumed owner or controller or prevented abatement.

(e) Following any determination by a State regulatory authority or other State agency, or any decision by an administrative or judicial tribunal reviewing such determination, the State regulatory authority shall review the information in AVS to determine if it is consistent with the determination or decision. If it is not, the State regulatory authority shall promptly inform OSM and request that the AVS information be revised to reflect the determination or decision.

15. Section 773.27 is added as follows:

§ 773.27 Periodic check of ownership or control information.

(a) Within two months after the initial disturbance of a permitted site and annually thereafter for as long as coal extraction on the site has not been completed, the regulatory authority shall take the following steps to determine whether the information contained in the current official record of the permit concerning the permittee, the operator, and the MSHA identification number for the site was and remains complete and accurate:

(1) An on-site inquiry during, or in addition to, a regular inspection; and

(2) A check of MSHA, Abandoned Mine Land, and Energy Information Administration information, as available through AVS.

(b) If, as a result of the steps taken under paragraph (a) of this section, the regulatory authority identifies any potential omission, inaccuracy, or inconsistency in the information provided in the application, or a subsequent change to such information—

(1) The regulatory authority shall promptly contact the permittee and require that the matter be resolved expeditiously through one or more of the following actions:

(i) Submission of a satisfactory explanation which includes credible information sufficient to demonstrate that no actual omission, inaccuracy, or inconsistency existed at the time of permit issuance and that no subsequent change to such information has occurred;

(ii) Amendment to the current official record of the permit, where appropriate;

(iii) Remedial action under § 773.20(c) of this part (or the State program equivalent) in situations where complete and accurate information would have precluded issuance of the permit under § 773.15(b) of this part; and

(iv) Enforcement action under §§ 843.11–843.12 of this chapter (or the State program equivalent) requiring the cessation of operations by any unapproved permittee or operator and the submission of an application for transfer, assignment, or sale of permit rights under § 774.17 of this chapter (or the State program equivalent) in situations where there has been an attempt to change the permittee, operator, or other owner or controller of the surface coal mining operation without the written approval of the regulatory authority.

(2) The regulatory authority shall also take action in accordance with the provisions of § 843.23 of this chapter (or the State program equivalent), where appropriate.

PART 778—PERMIT APPLICATIONS—MINIMUM REQUIREMENTS FOR LEGAL, FINANCIAL, COMPLIANCE, AND RELATED INFORMATION

17. The authority citation for part 778 continues to read as follows:

Authority: Pub. L. 95–87, 30 U.S.C. 1201 *et seq.*, and Pub. L. 100–34.

18. Section 778.13 is amended by revising the introductory language in paragraphs (c) and (d) to read as follows:

§ 778.13 Identification of interests.

* * * * *

(c) For each person who is deemed or presumed to own or control the applicant under the definition of *owned* or *controlled* and *owns* or *controls* in § 773.5 of this chapter, as applicable—

* * * * *

(d) For any surface coal mining operation that is deemed or presumed to be owned or controlled by either the applicant or any person who is deemed or presumed to own or control the applicant under the definition of *owned* or *controlled* and *owns* or *controls* in § 773.5 of this chapter, the operation's—

* * * * *

19. Section 778.14 is amended by revising the introductory language in paragraph (c) to read as follows:

§ 778.14 Violation information.

* * * * *

(c) A list of all violation notices received by the applicant during the three-year period preceding the application date, and a list of all outstanding violation notices received prior to the date of the application by any surface coal mining operation that is deemed or presumed to be owned or controlled by either the applicant or any person who is deemed or presumed to own or control the applicant under the definition of "owned or controlled" and "owns or controls" in § 773.5 of this chapter. For each violation notice reported, the list shall include the following information, as applicable:

* * * * *

PART 840—STATE REGULATORY AUTHORITY: INSPECTION AND ENFORCEMENT

20. The authority citation for part 840 continues to read as follows:

Authority: Pub. L. 95–87, 30 U.S.C. 1201 et seq., and Pub. L. 100–34, unless otherwise noted.

21. Section 840.13 is amended by revising paragraph (b) to read as follows:

§ 840.13 Enforcement authority.

* * * * *

(b) The enforcement provisions of each State program shall contain sanctions which are no less stringent than those set forth in section 521 of the Act and shall be consistent with §§ 843.11, 843.12, 843.13, and 843.23 and subchapters G and J of this chapter.

* * * * *

PART 843—FEDERAL ENFORCEMENT

22–23. The authority citation for part 843 continues to read as follows:

Authority: 30 U.S.C. 1201 *et seq.*, as amended; and Pub. L. 100–34.

§ 843.10 [Removed]

24. Section 843.10 is removed.

25. Section 843.23 is added as follows:

§ 843.23 Sanctions for knowing omissions or inaccuracies in ownership or control and violation information.

(a)(1) Whenever the Office identifies any omission or inaccuracy in ownership or control or violation

information provided in an application or other document submitted pursuant to §§ 773.22, 773.24, 773.25, 773.26, 773.27, 778.13, or 778.14 of this chapter, it shall determine whether the omission or inaccuracy resulted from a knowing failure to provide complete and accurate information, including—

(i) Any knowing submission of false information, and

(ii) Any failure by a person to provide complete and accurate information where the person knew or had reason to know that such failure could mislead the Office as to the facts of ownership or control relevant to a surface coal mining operation or the status of any violation.

(2) The knowing failure to provide complete and accurate information is a violation of the Act.

(b)(1) If the Office determines, pursuant to paragraph (a) of this section, that a failure to provide complete and accurate information was knowing, the Office shall promptly consider the imposition of one or more of the following sanctions:

(i) Denial of the permit for failure to comply with § 773.15(c)(1) of this chapter;

(ii) Issuance of a notice of violation, along with assessment of an appropriate civil penalty; and

(iii) Criminal prosecution under 30 U.S.C. 1268(g).

(2) Such sanctions shall be in addition to any action taken under § 773.27(b)(1)(iii) and (iv) of this chapter, if applicable.

26. Section 843.24 is added as follows:

§ 843.24 Oversight of State permitting decisions with respect to ownership or control or the status of violations.

(a) The Office shall take action pursuant to paragraphs (b) and (c) of this section whenever it determines, through its oversight of the implementation of State programs—

(1) That a State has issued a permit without complying with the State program equivalents of §§ 773.22, 773.23, 773.24, 773.26, and 843.23 of this chapter; or

(2) That a State has failed in a systemic manner to comply with the State program equivalent of § 773.27 of this chapter. Failure to comply in a systemic manner includes a continuing pattern of noncompliance by State, or one or more instances of noncompliance that result from or evidence a legal or policy decision which the State intends to apply to similar cases.

(b) If, as a result of its determination that a State has failed to comply with the provisions set forth in paragraph (a) of this section, the Office has reason to believe that the State has issued a permit improvidently within the meaning of § 773.20 of this chapter, the Office shall initiate action under the provisions of § 843.21 of this part.

(c) If the Office determines that a State's failure to comply with the State program equivalents of §§ 773.22, 773.23, 773.24, 773.26, and 843.23 of this chapter was knowing, or that the State has failed in a systemic manner to comply with the State program equivalent of § 773.27 of this chapter, it shall initiate action under §§ 735.21 or 886.18 (as allowed by law) and/or § 733.12(b) of this chapter, unless the State's action was the result of a mandatory injunction of a court of competent jurisdiction.

[FR Doc. 91-20976 Filed 9-5-91; 8:45 am]

BILLING CODE 4310-05-M

federal register

Friday
September 6, 1991

Part VI

Department of the Interior

Office of Hearings and Appeals

43 CFR Part 4

Special Rules Applicable to Surface Coal Mining Hearings and Appeals; Proposed Rule

DEPARTMENT OF THE INTERIOR

Office of Hearings and Appeals

43 CFR Part 4

RIN 1094-AA42

Special Rules Applicable to Surface Coal Mining Hearings and Appeals

AGENCY: Office of Hearings and Appeals, Interior.

ACTION: Proposed rule.

SUMMARY: Office of Hearings and Appeals (OHA) is proposing to amend its regulations applicable to surface coal mining hearings and appeals by adding procedural rules for administrative review of (1) decisions by the Office of Surface Mining Reclamation and Enforcement (OSM) to rescind permits that should not have been issued, and (2) decisions by OSM which determine that a person or entity is linked, within the meaning of OSM's ownership and control and permit review regulations, to a person currently in violation of the Surface Mining Control and Reclamation Act of 1977 or other applicable law. The proposed rules would provide for a hearing before an administrative law judge and for discretionary review of his initial decision by the Interior Board of Land Appeals. Amendment is also proposed of the rule pertaining to the burden of going forward with evidence to establish a prima facie case in an individual civil penalty proceeding. Additionally, appropriate editorial changes would be made in existing rules.

DATES: Written comments are due on or before October 21, 1991.

Public hearings will be held, if requested, in Washington, DC, and in Denver, Colorado, at dates and times that would subsequently be announced.

Public hearings may be requested in writing no later than September 27, 1991. Persons who wish to attend a public hearing, but not offer testimony, should check with the person listed below under FOR FURTHER INFORMATION CONTACT to determine whether a hearing has been requested.

ADDRESSES: Written comments on the proposed rules may be mailed or delivered in person to Director, Office of Hearings and Appeals, U.S. Department of the Interior, 4015 Wilson Blvd., Arlington, Virginia 22203.

Requests for a public hearing may be mailed or delivered to the same address.

The public hearing in Washington, DC, will be held, if requested, in the auditorium of the Department of the Interior, 1849 C Street, NW., Washington, DC. The public hearing in Denver, Colorado, will be held, if requested, at the Office of Surface Mining conference room, 1020 15th Street (Brooks Towers).

FOR FURTHER INFORMATION CONTACT: Will A. Irwin, Administrative Judge, Interior Board of Land Appeals, Office of Hearings and Appeals, U.S. Department of the Interior, 4015 Wilson Blvd., Arlington, Virginia 22203. Telephone 703-235-3750.

SUPPLEMENTARY INFORMATION:

Proposed Additions to 43 CFR 4.1105

References to the proposed rules, 4.1370 *et seq.* and 4.1380 *et seq.*, have been added to 43 CFR 4.1105(a)(2). The rules formerly designated as 43 CFR 4.1370 *et seq.* and 4.1380 *et seq.*, were removed by a recent rulemaking, effective February 21, 1991. See 56 FR 2139 (Jan. 22, 1991); 56 FR 5061 (Feb. 7, 1991).

Proposed Addition of 43 CFR 4.1370 et seq. Providing Procedures for Review of Decisions of the Office of Surface Mining Suspending or Rescinding Improvidently Issued Permits

30 CFR 773.20(c) requires a regulatory authority that finds a permit was improvidently issued (for reasons set forth in § 773.20(b)) to take one or more remedial measures. 30 CFR 773.20(c)(3) provides that the regulatory authority may suspend the permit until the violation is abated or the delinquent fee or penalty is paid; § 773.20(c)(4) provides that the regulatory authority may rescind the permit, 30 CFR 773.21(c) currently provides that a permittee "may file an appeal for administrative review of the notice (of proposed suspension and rescission, issued under § 773.21) under 43 CFR 4.1280–4.1286 * * * but where OSMRE is the regulatory authority the procedures of 43 CFR 4.21(a) shall not apply to suspend the effect of the notice."

43 CFR 4.1280–4.1286 are the procedures for an appeal from a decision of the Director of OSM that is "not required by the Act to be determined by formal adjudication under the procedures set forth in 5 U.S.C. 554." 43 CFR 4.1280. The appeal is to the Interior Board of Land Appeals (IBLA or the Board). 43 CFR 4.1281. 43 CFR 4.1286 provides that a party may request the Board to order a hearing on an issue of fact, which the Board may, in its discretion, grant. In OHA's view, however, it is likely that appeals from OSM decisions to suspend or rescind a permit will usually involve issues of fact because such decisions are based on findings that the permittee is responsible for or linked to violations that are unabated or penalties or fees that are unpaid pursuant to OSM's regulations on ownership and control and permit review, 30 CFR 773.5, 773.15. See 30 CFR 773.20, 773.21(a)(1)–(4). For this reason, although such appeals are not required by the Act to be determined by formal adjudication under the procedures set forth in 5 U.S.C. § 554, OHA proposes to add regulations that provide a permittee may file a request for review with the Hearings Division and a petition for discretionary review of the administrative law judge's initial decision with the Board. These proposed regulations are set forth in 43 CFR 4.1370 *et seq.* OSM has today published corresponding proposed amendments to 30 CFR 773.20 and 773.21(c).

The proposed rules set forth who may file a request for review of a suspension under 30 CFR 773.20(c)(3) or of a notice of proposed suspension and rescission under 30 CFR 773.21, where to file the request, when to file it, and the sanction for failure to file it on time. The proposed rules also state what the contents of a request should be, allow for the request to be amended, and require that the Office of Surface Mining and other interested parties respond to it.

The proposed rules require an administrative law judge to hold a hearing within 90 days of the filing of the responses to a request; they also require that the administrative law judge issue the initial decision within 30 days after the record of the hearing is closed.

At the hearing, the burden of going forward with evidence to establish a prima facie case for the validity of its decision is the responsibility of the Office of Surface Mining; the ultimate burden of persuasion that its decision is not valid rests with the person requesting review. This allocation of the burdens of proof conforms with that in other proceedings involving alleged violations under the Surface Mining Control and Reclamation Act of 1977 (the Act), 30 U.S.C. 1201 *et seq.* (1988); see 43 CFR 4.1171; 43 FR 34381 (Aug. 3, 1978); *Harry Smith Construction Co.* v. *OSM*, 78 IBLA 27, 30 (1983).

The proposed rules also provide that temporary relief from a notice of suspension or a notice of proposed suspension and rescission of an improvidently issued permit may be granted by the administrative law judge if it is shown that the person petitioning for temporary relief is likely to prevail on the merits and that the relief sought will not adversely affect public health or safety or cause significant, imminent harm to land, air, or water resources. The focus of the adverse effect inquiry would be the permitted operation, rather than the operation allegedly in violation.

Finally, the proposed rules provide that a party may file a petition for discretionary review of the administrative law judge's initial decision with IBLA; a decision on a petition is required within 60 days of the date for filing responses.

Proposed Addition of 43 CFR 4.1380 et seq. Providing Procedures for Review of Office of Surface Mining Written Decisions Concerning Ownership and Control

Section 510(c) of the Act, 30 U.S.C. 1260(c), provides in part:

> Where the schedule (filed by a permit applicant, listing violations of the Act) or other information available to the regulatory authority indicates that any surface coal mining operation owned or controlled by the applicant is currently in violation of this Act or such other laws referred to (in) this subsection (pertaining to air or water environmental protection), the permit shall not be issued until the applicant submits proof that such violation has been corrected or is in the process of being corrected to the satisfaction of the regulatory authority, department, or agency which has jurisdiction over such violation * * *.

OSM has defined the "owned or controlled" language in section 510(c). See 30 CFR 773.5. It has also provided procedures for reviewing violations in response to a permit application. *See* 30 CFR 773.15(b)(1).

Section 3.1.3 of the Agreement approved by the U.S. District Court for the District of Columbia on September 5, 1990, in *Save Our Cumberland Mountains* v. *Lujan*, Civil Action 81–2134–AER, provides that the regulatory authority

> shall not finally approve the application, unless and until (a) all ownership and control links involving the applicant and any violator, as shown by the computer system required by Section 1 of this Agreement (the Applicant/Violator System, or AVS), have been shown to be erroneous or have been rebutted, or (b) the applicant has established under 30 CFR 773.15(b)(1) or the State program equivalent that the violation has been abated, is in the process of being corrected to the satisfaction of the agency with jurisdiction over the violation, or is the subject of a good faith appeal.

In accordance with Paragraphs 1 and 2 of Attachment A of the Agreement, OSM has today published proposed rules governing how applicant/violator links identified by the Applicant/Violator System may be shown to be erroneous or may be rebutted and how the status of a violation is determined for purposes of 30 CFR 773.20–773.21.

Paragraph 4 of Attachment A of the Agreement states:

> The Department shall review the legal authorities, remedies, and procedures available to applicants, permittees, and persons or entities deemed to be in an ownership or control relationship with an applicant, permittee, or violator, to determine whether additional procedures should be adopted with regard to their rights to due process. If the Department determines that additional authorities, remedies, or procedures are needed or would be helpful, OHA shall propose a rule to address the subject within 180 days, and shall expeditiously proceed with the rulemaking thereafter.

The Department has tentatively determined that additional procedures for administrative review by the Hearings Division of OHA similar to those provided by 5 U.S.C. 554, with discretionary review by IBLA, of written decisions by OSM based on ownership and control would be helpful.

OSM stated, in the preamble to 30 CFR 773.5 and 773.15(b), that when OSM is the regulatory authority, "(a)ny applicant denied a permit by OSM may file a request for review with the Hearings Division of the Department of the Interior's Office of Hearings and Appeals in accordance with 43 CFR 4.1360 *et seq.*" 53 FR 38879 (Oct. 3, 1989). Although this is true, it may be preferable for an applicant to be able to resolve ownership and control issues before an application is denied. OSM also stated in the preamble that, where a state regulatory authority denies an application based on information that a federal violation exists or that monies are owed to the Federal Government, "challenges to (such) determinations * * * (would) be resolved in a Federal forum using national standards. The Department * * * is prepared to address any problems which may arise on a case-by-case basis if existing procedures prove insufficient to ensure due process." 53 FR 38879 (Oct. 3, 1989). Administrative review by OHA would provide this forum.

Finally, the preamble stated that "both individuals and organizations may seek to amend the information in the (AVS), independent of the existence of a permit application if they believe that the records are not accurate, relevant, timely or complete * * *. A determination which OSM makes on a request for amending information contained in the (AVS) will be subject to administrative review within DOI." *Id.* The preamble outlined alternative avenues of review for individuals and organizations and said OSM would "inform any persons requesting * * * review of the proper forum for appeal." *Id.* Upon reconsideration, the Department believes the same forum, *i.e.*, OHA, should conduct administrative review of OSM decisions on requests, whether from individuals or organizations, for amending information in the AVS and that the same procedures should apply to such review as to review of other ownership and control decisions. Therefore, OHA is proposing to add 43 CFR 4.1380 *et seq.* to provide procedures for administrative review of a written OSM decision that a person is in an ownership or control link to any person cited in the Federal violation notice under 30 CFR 773.5 and 773.15(b). *See* proposed 30 CFR 773.5 for definitions of "ownership and control link" and "Federal violation notice."

The proposed procedures are similar to those for review of notices of suspension and notices of proposed suspension and rescission, 43 CFR 4.1370 *et seq.*, described above. As with decisions to suspend or rescind a permit, the Department recognizes it is important that uncertainties about a person's status be clarified promptly so that, for example, an application for a permit will be blocked no longer than necessary. The proposed rules therefore provide for expedited procedures and for temporary relief from an ownership and control decision pending completion of administrative review. In this context the adverse effect inquiry in a temporary relief proceeding would focus on the operation to be permitted.

Proposed Amendment of Burden of Going Forward with Evidence in an Individual Civil Penalty Proceeding, 43 CFR 4.1307

Paragraph 3 of Attachment A of the Agreement in *Save Our Cumberland Mountains* v. *Lujan, supra,* provides that OSM is to propose a rule that an individual civil penalty will be "assessed against each officer, director, or agent who has been served a notice of potential liability and who has not demonstrated that he or she has taken all reasonable steps within his or her legal authority to bring about abatement by the permittee." OSM intends to publish such a proposed rule.

Accordingly, OHA proposes to amend 43 CFR 4.1307, the rule governing burdens of proof in individual civil penalty proceedings, to provide that OSM has established its prima facie case that the individual willfully and knowingly authorized, ordered, or carried out the corporate permittee's violation or failure or refusal to comply if it shows that it served a notice of potential liability on an appropriate individual with responsibility for the mining operation and the violation has not been abated. *See* proposed 43 CFR 4.1307(a)(3). "A prima facie case is made where sufficient evidence is presented to establish the essential facts and which evidence will remain sufficient if not contradicted. It is evidence that will justify but not compel a finding in favor of the one presenting it." *James Moore,* 1 IBSMA 216, 223 n.7, 86 I.D. 369, 373 n.7 (1979). The ultimate burden of persuasion that the individual willfully and knowingly authorized, ordered, or carried out the corporate permittee's violation or failure or refusal to comply would remain with OSM. See 43 CFR 4.1307(c). OSM would carry that burden if its prima facie case were not contradicted or, if it were contradicted, it presented a preponderance of evidence that the individual willfully and knowingly authorized, ordered, or carried out the corporate permittee's violation or failure or refusal to comply.

Determination of Effects

Because these rules only set forth the details of procedures for conducting hearings and appeals of decisions of OSM under the Surface Mining Control and Reclamation Act of 1977, the Department has determined that they are not major, as defined by Executive Order 12291, and will not have a significant economic effect on a substantial number of small entities under the Regulatory Flexibility Act (5 U.S.C. 601 *et seq.*).

National Environmental Policy Act

The Department has determined that these rules will not significantly affect the quality of the human environment on the basis of the categorical exclusion of regulations of a procedural nature set forth in 516 DM 2, Appendix 1, section 1.10.

Paperwork Reduction Act

These rules contain no information collection requirements requiring Office of Management and Budget approval under 44 U.S.C. 3501 *et seq.*

Takings Implication Assessment

These rules do not pose any takings implications requiring preparation of a Takings Implication Assessment under Executive Order No. 12630 of March 18, 1988.

Drafting Information

The primary author of these proposed regulations is Will A. Irwin, Administrative Judge, Interior Board of Land Appeals, Office of Hearings and Appeals, U.S. Department of the Interior.

List of Subjects in 43 CFR Part 4

Administrative practice and procedure, Mines, Public lands, Surface mining.

For the reasons set forth in the preamble, it is proposed to amend subpart L of part 4 of title 43 of the Code of Federal Regulations as set forth below:

Dated: May 15, 1991.

Roger E. Middleton,

Director.

PART 4—[AMENDED]

43 CFR part 4 is amended as follows:

Subpart L—Special Rules Applicable to Surface Coal Mining Hearings and Appeals

1. The authority citation for part 4, subpart L, continues to read as follows:

Authority: 30 U.S.C. 1256, 1260, 1261, 1264, 1268, 1271, 1272, 1275, 1293; 5 U.S.C. 301.

2. Section 4.1105 is proposed to be amended by revising paragraph (a)(2) introductory text to read:

§ 4.1105 Parties.

(a) * * *

(2) In a review proceeding under §§ 4.1160 *et seq.*, 4.1180 *et seq.*, 4.1300 *et seq.*, 4.1350 *et seq.*, 4.1360 *et seq.*, 4.1370 *et seq.*, 4.1380 *et seq.*, or 4.1390 *et seq.* of this part, OSM, as represented by the Office of the Solicitor, Department of the Interior, and—

* * * * *

3. Section 4.1307 is proposed to be amended by revising paragraph (a)(3) to read:

§ 4.1307 Elements; burdens of proof.

(a) * * *

(3) The individual willfully and knowingly authorized, ordered, or carried out the corporate permittee's violation or failure or refusal to comply. A showing that OSM served the individual with a notice of potential liability for an individual civil penalty in accordance with 30 CFR 724.11 or 846.11, that, at the time of such service, the individual was the president or other chief executive officer, a director, or any other officer or agent of the corporation who had line responsibility with respect to the minesite; and that a violation that was the subject of the cessation order issued to the corporate permittee has not been abated is sufficient to establish this element of its prima facie case.

* * * * *

4. New §§ 4.1370–4.1377 and a new heading preceding them are proposed to be added to read:

Review of Decisions of the Office of Surface Mining Suspending or Rescinding Improvidently Issued Permits

Sec.
4.1370 Scope.
4.1371 Who may file, where to file, when to file.
4.1372 Contents of request for review, response to request, amendment of request.
4.1373 Hearing.
4.1374 Burdens of proof.
4.1375 Time for initial decision.
4.1376 Petition for temporary relief from notice of suspension or notice of proposed suspension and rescission; appeals from decisions granting or denying temporary relief.
4.1377 Petition for discretionary review of initial decisions.

Review of Decisions of the Office of Surface Mining Suspending or Rescinding Improvidently Issued Permits

§ 4.1370 Scope.

These rules govern the procedures for review of notices from OSM of suspension of improvidently issued permits issued under 30 CFR 773.20(c)(2) or of notices of proposed suspension and rescission of improvidently issued permits under 30 CFR 773.21.

§ 4.1371 Who may file, where to file, when to file.

(a) A permittee that is served with a notice of suspension under 30 CFR 773.20(c)(2) or a notice of proposed suspension and rescission under 30 CFR 773.21 may file a request for review with

the Hearings Division, Office of Hearings and Appeals, U.S. Department of the Interior, 4015 Wilson Boulevard, Arlington, Virginia 22203 (Telephone 703–235–3800), within 30 days of service of the notice.

(b) Failure to file a request for review within 30 days of service of the notice shall constitute a waiver of review of the notice. An untimely request for review shall be dismissed.

§ 4.1372 Contents of request for review, response to request, amendment of request.

(a) The request for review shall include

(1) A copy of the notice of suspension or the notice of proposed suspension and rescission;

(2) Documentary proof, or, where appropriate, offers of proof, concerning the matters set forth in 30 CFR 773.20(b) or 773.21(a) (1)–(4) showing that the person requesting review is entitled to administrative relief;

(3) A statement whether the person requesting review wishes an evidentiary hearing or waives the opportunity for such a hearing;

(4) A request for specific relief; and

(5) Any other relevant information.

(b) Within 20 days of service of the request for review by the permittee in accordance with § 4.1109, OSM and all interested parties shall file an answer to the request for review or a motion in response to the request or a statement that no answer or motion will be filed. OSM or any interested party may request an evidentiary hearing even if the person requesting review has waived the opportunity for such a hearing.

(c) The permittee may amend the request for review once as a matter of right before a response in accordance with paragraph (b) of this section is required to be filed. After the period for filing such a response, the permittee may file a motion for leave to amend the request for review with the administrative law judge. If the administrative law judge grants a motion for leave to amend, he shall provide OSM and any other party that filed a response in accordance with paragraph (b) not less than 10 days to file an amended response.

§ 4.1373 Hearing.

(a) Within 90 days of receipt of the responses in accordance with § 4.1372, the administrative law judge shall convene a hearing on the request for review. The 90-day deadline for convening the hearing may be waived for a definite time by the written agreement of all parties, filed with the administrative law judge, or may be extended by the administrative law judge, in response to a motion setting forth good cause to do so, if no other party is prejudiced by the extension.

(b) The administrative law judge shall give notice of and conduct the hearing at least 10 days in advance.

§ 4.1374 Burdens of proof.

(a) OSM shall have the burden of going forward to present a prima facie case of the validity of the notice of suspension or the notice of proposed suspension and rescission.

(b) The permittee shall have the ultimate burden of persuasion by a preponderance of the evidence that the notice is invalid.

§ 4.1375 Time for initial decision.

The administrative law judge shall issue an initial decision within 30 days of the date the record of the hearing is closed.

§ 4.1376 Petition for temporary relief from notice of suspension or notice of proposed suspension and rescission; appeals from decisions granting or denying temporary relief.

(a) Any party may file a petition for temporary relief from the notice of suspension or the notice of proposed suspension and rescission in conjunction with the filing of the request for review or at any time before an initial decision is issued by the administrative law judge.

(b) The petition for temporary relief shall be filed with the administrative law judge to whom the request for review has been assigned. If none has been assigned, the petition shall be filed with the Hearings Division, Office of Hearings and Appeals, U.S. Department of the Interior, 4015 Wilson Boulevard, Arlington, Virginia 22203 (Telephone 703–235–3800).

(c) The petition for temporary relief shall include

(1) A statement of the specific relief requested;

(2) A detailed statement of why temporary relief should be granted, including—

(i) A showing that there is a substantial likelihood that petitioner will prevail on the merits, and

(ii) A showing that the relief sought will not adversely affect the public health or safety or cause significant, imminent environmental harm to land, air or water resources;

(3) A statement whether the petitioner requests an evidentiary hearing.

(d) Any party may file a response to the petition no later than 5 days after it was served and may request a hearing even if the petitioner has not done so.

(e) The administrative law judge may hold a hearing on any issue raised by the petition within 10 days of the filing of responses to the petition, and shall do so if a hearing is requested by any party.

(f) The administrative law judge shall issue an order or decision granting or denying the petition for temporary relief within 5 days of the date of a hearing on the petition or, if no hearing is held, of service of the responses to the petition on all parties.

(g) The administrative law judge may only grant temporary relief if

(1) All parties to the proceeding have been notified of the petition and have had an opportunity to respond and a hearing has been held if requested;

(2) The petitioner has demonstrated a substantial likelihood of prevailing on the merits; and

(3) Temporary relief will not adversely affect public health or safety or cause significant, imminent environmental harm to land, air or water resources.

(h) Any party may file an appeal of an order or decision granting or denying temporary relief with the Board within 30 days of receipt of the order or decision or, in the alternative, may seek judicial review within 30 days in accordance with section 526(a) of the Act, 30 U.S.C. 1276(a). If an appeal is filed with the Board, the Board shall issue an expedited briefing schedule and shall decide the appeal expeditiously.

§ 4.1377 Petition for discretionary review of initial decisions.

(a) Any party may file a petition for discretionary review of an initial decision of an administrative law judge on a request for review of a notice of suspension or a notice of proposed suspension and rescission with the Board within 30 days of receipt of the decision. An untimely petition shall be dismissed.

(b) The petition for discretionary review shall set forth specifically the alleged errors in the initial decision, with supporting argument, and shall attach a copy of the decision.

(c) Any part may file a response to the petition for discretionary review within 30 days of its service.

(d) The Board shall issue a decision denying the petition or granting the petition and deciding the merits within 60 days of the deadline for filing responses.

5. New §§ 4.1380 through 4.1387 and a new heading preceding them are proposed to be added to read:

Review of Office of Surface Mining Written Decisions Concerning Ownership and Control

Sec.
4.1380 Scope.
4.1381 Who may file; when to file; where to file.
4.1382 Contents of request for review; response to request; amendment of request.
4.1383 Hearing.
4.1384 Burdens of proof.
4.1385 Time for initial decision.
4.1386 Petition for temporary relief from decision; appeals from decisions granting or denying temporary relief.
4.1387 Petition for discretionary review of initial decisions.

Review of Office of Surface Mining Written Decisions Concerning Ownership and Control

§ 4.1380 Scope.

These rules govern the procedures for review of written decisions of OSM that a person is in an ownership or control link to any person cited in a violation notice within the scope of 30 CFR 773.5, 773.15(b).

§ 4.1381 Who may file; when to file; where to file.

(a) Any person who receives a written decision from OSM pursuant to 30 CFR 773.24(d)(2) or 773.25(c)(2) that such person is in an ownership or control link to any person cited in a violation notice within the scope of 30 CFR 773.5, 773.15(b), may file a request for review with the Hearings Division, Office of Hearings and Appeals, U.S. Department of the Interior, 4015 Wilson Blvd., Arlington, Virginia 22203 (Telephone 703–235–3800) within 30 days of service of the decision.

(b) Failure to file a request for review within 30 days of service of the decision constitutes a waiver of review of the decision. An untimely request for review shall be dismissed.

§ 4.1382 Contents of request for review; response to request; amendment of request.

(a) The request for review shall include:

(1) A copy of the decision of OSM;

(2) A statement of the alleged errors in the decision and the facts that entitle the person requesting review to administrative relief;

(3) A statement whether the person requesting review wishes an evidentiary hearing or waives the opportunity for such a hearing;

(4) A request for specific relief; and

(5) Any other relevant information.

(b) Within 20 days of service of the request for review in accordance with § 4.1109, OSM and all interested parties shall file an answer to the request for review or a motion in response to the request or a statement that no answer or motion will be filed. OSM or any interested party may request an evidentiary hearing even if the person requesting review has waived the opportunity for a hearing.

(c) The person filing the request for review may amend it once as a matter of right before the response in accordance with paragraph (b) of this section is required to be filed. After the period for filing such a response, the person may file a motion for leave to amend the request with the administrative law judge. If the administrative law judge grants a motion for leave to amend, he shall provide OSM and any other party that filed a response in accordance with paragraph (b) not less than 10 days to file an amended response.

§ 4.1383 Hearing.

(a) Within 90 days of receipt of responses in accordance with § 4.1382, the administrative law judge shall convene a hearing on the request for review. The 90-day deadline for convening the hearing may be waived for a definite time by the written agreement of all parties, filed with the administrative law judge, or may be extended by the administrative law judge, in response to a motion setting forth good cause to do so, if no other party is prejudiced by the extension.

(b) The administrative law judge shall give notice of and conduct the hearing at least 10 days in advance.

§ 4.1384 Burdens of proof.

(a) OSM shall have the burden of going forward to present a prima facie case of the validity of the decision.

(b) The person filing the request for review shall have the ultimate burden of persuasion by a preponderance of the evidence that the decision is in error.

§ 4.1385 Time for initial decision.

The administrative law judge shall issue an initial decision within 30 days of the date the record of the hearing is closed.

§ 4.1386 Petition for temporary relief from decision; appeals from decisions granting or denying temporary relief.

(a) Any party may file a petition for temporary relief from the decision of OSM in conjunction with the filing of the request for review or at any time before an initial decision is issued by the administrative law judge.

(b) The petition for temporary relief shall be filed with the administrative law judge to whom the request for review has been assigned. If none has been assigned, the petition shall be filed with the Hearings Division, Office of Hearings and Appeals, U.S. Department of the Interior, 4015 Wilson Boulevard, Arlington, Virginia 22203 (Telephone 703–235–3800).

(c) The petition for temporary relief shall include:

(1) A statement of the specific relief requested;

(2) A detailed statement of why temporary relief should be granted, including:

(i) A showing that there is a substantial likelihood that petitioner will prevail on the merits, and

(ii) A showing that granting the relief requested will not adversely affect the public health or safety or cause significant, imminent environmental harm to land, air or water resources;

(3) A statement whether the petitioner requests an evidentiary hearing.

(d) Any party may file a response to the petition no later than 5 days after it was served and may request a hearing even if the petitioner has not done so.

(e) The administrative law judge may hold a hearing on any issue raised by the petition within 10 days of the filing of responses to the petition, and shall do so if a hearing is requested by any party

(f) The administrative law judge shall issue an order or decision granting or denying the petition for temporary relief within 5 days of the date of a hearing on the petition or, if no hearing is held, of service of the responses to the petition on all parties.

(g) The administrative law judge may only grant temporary relief if:

(1) All parties to the proceeding have been notified of the petition and have had an opportunity to respond and a hearing has been held if requested;

(2) The petitioner has demonstrated a substantial likelihood of prevailing on the merits; and

(3) Temporary relief will not adversely affect public health or safety or cause significant, imminent environmental harm to land, air or water resources.

(h) Any party may file an appeal of an order or decision granting or denying temporary relief with the Board within 30 days of receipt of the order or decision or, in the alternative, may seek judicial review within 30 days in accordance with section 526(a) of the Act, 30 U.S.C. 1276(a). If an appeal is filed with the Board, the Board shall issue an expedited briefing schedule and shall decide the appeal expeditiously.

§ 4.1387 Petition for discretionary review of initial decisions.

(a) Any party may file a petition for discretionary review of an initial decision of an administrative law judge on a request for review with the Board

within 30 days of receipt of the decision. An untimely petition shall be dismissed.

(b) The petition for discretionary review shall set forth specifically the alleged errors in the initial decision, with supporting argument, and shall attach a copy of the decision.

(c) Any party may file a response to the petition for discretionary review within 30 days of its service.

(d) The Board shall issue a decision denying the petition or granting the petition and deciding the merits within 60 days of the deadline for filing responses.

[FR Doc. 91-20977 Filed 9-5-91; 8:45 am]

BILLING CODE 4310-79-M

federal register

Friday
September 6, 1991

Part VII

Department of Housing and Urban Development

Office of the Assistant Secretary for Public and Indian Housing

24 CFR Parts 905 and 990

Low-Income Public and Indian Housing—Vacancy Rule; Proposed Rule

DEPARTMENT OF HOUSING AND URBAN DEVELOPMENT

Office of the Assistant Secretary for Public and Indian Housing

24 CFR Parts 905 and 990

[Docket No. R-91-1552; FR-2784-P-01]

RIN 2577-AA84

Low-Income Public and Indian Housing—Vacancy Rule

AGENCY: Office of the Assistant Secretary for Public and Indian Housing, HUD.

ACTION: Proposed rule.

SUMMARY: This proposed rule would establish new conditions under which a Public Housing Agency or an Indian Housing Authority could include vacant units in its computation of eligibility under the Performance Funding System (PFS). The proposed rule will establish a new occupancy standard (Actual Occupancy Standard) for PHAs and IHAs of 98% rather than the current 97%. This new occupancy standard will be used in calculating the Dwelling Rental Income component of the Performance Funding System. In addition, the determination of Unit Months Available will be changed to limit the circumstances under which operating subsidies will be paid to various categories of units not occupied as residences. The increase in the occupancy standard from the present 97% to 98% and the reduction in operating subsidy assistance for vacant units outside that parameter is consistent with the Department's responsibility to provide housing assistance to low-income families, not simply to pay subsidies to housing authorities for PHA/IHA units.

The Department's obligation, and our goal in developing this revised vacancy rule, is to assist in the provision of decent, safe, and sanitary housing for low-income families and to reduce expenditure of limited operating subsidy funds in support of units not occupied by eligible families. It is the Department's intent to have a final rule on this subject published in time to be effective for PHA fiscal years starting on or after January 1, 1992.

DATES: Comments must be received by November 5, 1991, to assure their consideration.

ADDRESSES: Interested persons are invited to submit written comments regarding this proposed rule to the Office of the General Counsel, Rules Docket Clerk, room 10276, Department of Housing and Urban Development, 451 Seventh Street SW., Washington, DC 20410. Comments should refer to the above docket number and title. A copy of each comment submitted will be available for public inspection and copying during regular business hours in room 10276.

As a convenience to commenters, the Rules Docket Clerk will accept brief public comments transmitted by facsimile ("FAX") machine. The telephone number of the FAX receiver is (202) 708-4337. (This is not a toll-free number.) Only public comments of six or fewer total pages will be accepted via FAX transmittal. This limitation is necessary in order to assure reasonable access to the equipment. Comments sent by FAX in excess of six pages will not be accepted. Receipt of FAX transmittals will not be acknowledged, except that the sender may request confirmation of receipt by calling the rules Docket Clerk (202) 708-2084) after transmission of the comment.

FOR FURTHER INFORMATION CONTACT: Mr. John T. Comerford, Director, Financial Management Division, Office of Management Operations, Public and Indian Housing, room 4212, U.S. Department of Housing and Urban Development, 451 Seventh Street, SW., Washington DC 20410, telephone (202) 708-1872. Hearing or speech impaired individuals may call HUD's TDD number, (202) 708-0850. (These telephone numbers are not toll-free.)

SUPPLEMENTARY INFORMATION:

I. Paperwork Reduction Act Statement

The information collection requirements contained in §§ 905.720(b)(1), 990.108(b)(1), 905.720(b)(2)(i)(E), 990.108(b)(2)(i)(E), 905.725(b)(3), 990.109(b)(3), 905.730(e), and 990.110(e) have been submitted to the Office of Management and Budget (OMB) for review under the Paperwork Reduction Act of 1980. Information on the estimated public reporting burden is provided under the Preamble heading, Findings and Certifications, at VII H.

II. Background

On May 31, 1984, the Department published a proposed rule (49 FR 22663) that would have permitted the payment of full operating subsidies to PHAs and IHAs only for occupied units and to those vacant units that fell within an Allowable Vacancy Rate as defined in the proposed rule. The Department published that proposed rule because it was concerned that the existing Performance Funding System regulation provided little incentive to PHAs/IHAs to reduce vacancies. (We note, however, that IHAs tend to have very few vacancy problems.)

The interim rule that was published on June 24, 1985 (50 FR 25951), and the final rule that was published on May 7, 1986 (51 FR 16835), were closer in structure to the then existing regulation than to the proposed rule. There was no separate computation of operating subsidy for vacant units. Instead, PHAs/IHAs with high vacancy rates were encouraged to adopt vacancy reduction strategies that would be reflected in Comprehensive Occupancy Plans (COPs).

There are a number of significant problems with the current rule that argue for change. Most importantly, there is little indication that the current policy has had the desired effect of stabilizing and reducing vacancy rates; in fact, program-wide vacancy rates have steadily increased from 5.8% in FY 1986 to 7.8% at the end of FY 1990.

The current policy permits eligibility for payment of full operating subsidy for empty units if they are incorporated into a HUD-approved Comprehensive Occupancy Plan or if most of the vacancies are part of a funded, on-schedule modernization program. Such units may not generate full operating costs simply because they are not occupied, because they are in poor condition and are not being repaired and offered for rent, or because they are in a project or building that is completely closed. Furthermore, vacant units in projects that are undergoing modernization receive full subsidy even though they may not have full operating costs and, in some cases, it may not have been necessary to vacate the entire building for the modernization to proceed.

The Department finds that it is unacceptable fiscal policy to pay full subsidy under the circumstances outlined above and proposes that there must be incentives to increase occupancy levels, principally by limiting the conditions under which subsidy is paid for vacant units and under which units not occupied as residences are placed in excepted categories.

III. Existing Regulation

Under the existing PFS regulation, the treatment of vacant units depends to a large extent on how the PHA/IHA has classified itself into one of several occupancy categories. These occupancy categories, in turn, determine the Projected Occupancy Percentage to be used in computing a PHA's/IHA's Dwelling Rental Income. These occupancy categories have taken into account units that are vacant because of

modernization activities. The Projected Occupancy Percentage used by a low occupancy PHA/IHA depends on whether it has a HUD-approved Comprehensive Occupancy Plan. A low occupancy PHA/IHA without an approved plan uses the standard percentage (97%); one with an approved plan uses the higher of the occupancy percentage goal stated in the plan for the budget year or the actual occupancy percentage, both of which are adjusted to discount units vacant for reasons beyond the PHA/IHA's control.

The per-unit operating subsidy eligibility is calculated in accordance with §§ 990.105–990.110 (§§ 905.710–905.730), and is then multiplied by the total Unit Months Available (UMAs). Under the existing regulation, a unit is considered available for occupancy from the time the project reached the end of the initial occupancy period until the time it is approved by HUD for deprogramming and vacated or is approved for non-dwelling use. Other than referring to a unit approved for deprogramming or nondwelling use, the existing definition does not attempt to distinguish further among various categories of vacant units such as those undergoing modernization.

Note: Under the provisions of 24 CFR 964.39, Operating Subsidy eligibility is calculated separately for any project(s) managed by a Resident Management Corporation, including a separate calculation of project occupancy percentage.

IV. Proposed Rule

The proposed rule would alter the way in which units will be considered as eligible for operating subsidy, effective beginning with the first PHA fiscal year after the effective date of a final rule. The Department intends to publish the final rule in time for it to be effective for PHA fiscal years beginning on or after January 1, 1992. The changes involve the exclusion of certain units from the calculation of Unit Months Available (UMAs); allowance of full subsidy for only a few types of units other than units occupied by eligible residents; and allowance of partial subsidy for certain other units.

The categories of units excluded from UMAs will consist of:

(a) Vacant units approved for demolition or disposition;

(b) Units lost when one or more dwelling units are combined to create a single larger dwelling unit;

(c) Units approved for non-dwelling use;

(d) Vacant units that are being condemned by a public body; and

(e) Excess vacant units, defined as vacant units in excess of the higher of 5 vacant units or the product derived by taking 2% of the total units available for occupancy after adjusting for vacant units in the above four categories.

Operating subsidies will be paid in full (subject to the availability of appropriations) for the following categories of units:

(a) Units available for occupancy and occupied as a residence;

(b) Units available for occupancy but vacant—up to 2% of the units or a total of 5 units, whichever is greater;

(c) Units lost (and excluded from UMAs) when one or more dwelling units are combined to create a single larger unit, as long as the total number of people served by the newly combined unit(s) is not reduced; and

(d) Units removed (and excluded from UMAs) for temporary non-dwelling use in anti-drug and economic self-sufficiency activities.

Partial operating subsidy will be provided for the following categories:

(a) Excess vacancies (20% of AEL); and

(b) Vacant units approved for demolition or disposition or being condemned by a public body (documented costs—up to 20% of AEL), until the units are removed from ACC coverage when demolition, disposition or condemnation is complete.

Computation of Subsidy Under Proposed Rule

In computing its per-unit Dwelling Rental Income under the Performance Funding System, a PHA/IHA will use as its Projected Occupancy Percentage the lesser of 98% or the reciprocal of the percentage determined by taking no more than 5 vacant units and dividing by the total number of units available for occupancy. After the per-unit operating subsidy eligibility has been determined, it will be multiplied by the total Unit Months Available (UMAs) which will have been adjusted to exclude various categories of units. For those vacant units not included in the total UMAs, separate computations of operating subsidy eligibility will be made as shown in the following table.

Vacancy category	Subsidy eligibility
1. Approved for nondwelling use:	
a. Approved for temporary use in anti-drug or economic self-sufficiency activities and meeting criteria for full subsidy.	Full eligibility under a separate category. (See additional discussion on this subject under the heading UNITS APPROVED FOR ANTI-DRUG OR ECONOMIC SELF-SUFFICIENCY ACTIVITIES.)
b. Approved for temporary use for PHA/IHA-related activities other than described in 1.a.	No eligibility.
c. Approved for permanent nondwelling use.	No eligibility.
2. Approved for combination with other dwelling units.	Full eligibility for units lost, under a separate category, if there is no reduction in the number of people served. (See additional discussion on this subject under the heading TREATMENT OF UNITS COMBINED WITH OTHER UNITS.)
3. Excess vacancies:	
a. Vacant units that are part of a funded modernization program.	Eligibility is limited to 20% of the AEL. (See additional discussion under the heading DEVELOPMENT OF REDUCED AEL PAYMENTS.)
b. Other vacant units above the allowed number.	
4. Units approved for demolition of disposition and units being condemned by a public body.	Eligibility is limited to documented costs, with a maximum of 20% of the AEL, until removed from ACC coverage.

V. Comparison of Current and Proposed Rule

The proposed rule distinguishes itself from the current regulation in several important respects, as follows:

(a) *Establishment of a new standard for defining excess vacancies.* The proposed rule establishes 98% as the acceptable occupancy standard for PHAs/IHAs rather than the current 97% standard. The proposed rule would maintain the five-unit exception, as in the current regulations, for small PHAs/IHAs where small numbers of vacant units would make it extremely difficult to attain a 98% occupancy rate. These changes are consistent with the Department's policy of encouraging efficient use of housing resources, increasing the availability of assisted housing for eligible families, reducing excessive vacancy rates, and minimizing subsidy expenditures for units not occupied by low-income families.

(b) *Exclusion of CIAP/Mod units from*

eligibility for operating subsidy. The proposed rule would not differentiate between units vacated incident to CIAP projects and other vacancies. Under the existing rule, vacant units in projects that had funded, on-schedule modernization programs were not counted against the PHA's/IHA's allowable 3% vacancy margin.

Modernization work often involves the vacating of units and may result in a short term loss of rental income while the unit is vacant. This initial loss should be more than offset by having a more viable unit that is quickly occupied and producing a steady stream of rental income. The Department did not wish to impose undue penalties on PHAs undertaking modernization activities that would be in their and the Department's best interest. The Department, therefore, has allowed PHAs that have or apply to have vacant units in a funded, on-schedule modernization program an opportunity to receive special treatment in determining operating subsidy eligibility.

This special treatment has been provided in two ways: First, if a PHA anticipates that it will have less than 97% occupancy in its budget year, the Authority may be able to use that lower percentage in its operating subsidy calculations by showing that its occupancy rate would be 97% or higher after adjusting for vacant units in an on-schedule modernization program. Second, if a PHA has a HUD-approved Comprehensive Occupancy Plan (COP), the Authority has been permitted to adjust its otherwise fixed occupancy goals if it could demonstrate that it had submitted an approvable application for modernization work that was rejected because of insufficient HUD funds. This special treatment has allowed a PHA to receive full operating subsidy for vacant units that are undergoing modernization and for units awaiting modernization when funds become available.

The Department continues to support the principle embodied in the existing rule, i.e., PHAs should not be unduly burdened in undertaking modernization activities because of lost rental revenue. However, the Department believes that payment of *full* operating subsidy to this class of vacant units is inappropriate and unjustified.

The Department's current practice with regard to other vacant units that have been approved for temporary use as nondwelling units is to exclude them from operating subsidy benefits. Vacant units that have been approved for demolition or disposition receive only partial operating subsidy. (See § 990.108.)

Where operating subsidy is provided for units not being occupied as residences, the number and/or type of unit involved is very limited. The Department allows payment of full operating subsidy for some public housing units used to support anti-drug or economic self-sufficiency activities for public housing tenants. Approval is limited to one site per public housing project and for a period of no more than three years. The Department also pays full operating subsidy for units that have been combined with other units—but only where there has been no reduction in the number of people served.

The Department finds it appropriate to provide only partial payments of operating subsidy for vacant units in a funded modernization program. The proposed rule reflects a payment level of 20% of the PHA's Allowance Expense Level (AEL) for vacant units in excess of the projected occupancy rate of 98%. It is believed that this figure reasonably reflects the level of expenses directly related to the operation and maintenance of vacant units. The Department calls special attention to this change and invites specific comments on the percentage factor to be applied.

(c) *Prohibition against using a Projected Occupancy Percentage less than the HUD-acceptable standard.* The proposed rule would limit a PHA/IHA to using the HUD-approved occupancy standard of 98% (or no more than 5 vacant units) as its Projected Occupancy Percentage. The existing regulation permits use of a lower percentage in the case of vacant units in projects that had funded, on-schedule modernization programs, or had been included in a HUD-approved Comprehensive Occupancy Plan (COP).

Under the proposed rule, the COPs would have no further effect after the beginning of the PHA/IHA's next fiscal year following the effective date of a final rule. PHAs are still encouraged to undertake the structured, analytical approach encompassed in the COP concept, i.e., identify the causes of their vacancy problems and develop vacancy reduction strategies and actions that are responsive to the problems and appropriate to the management and resources of the PHA.

Under the existing regulation, PHAs could justify using a less than 97% occupancy percentage by having a HUD-approved COP that contained yearly occupancy goals. PHAs that submitted COPs during the initial year of that system were allowed up to five years to achieve the 97% level. After the first year, PHAs that developed COPs were expected to achieve the 97% level within a two year period. In both cases, a longer timeframe could be had with HUD Headquarters approval.

The reason for having the two different timeframes was that PHAs with the most extensive and difficult vacancy problems were expected to develop COPs during that first year and a five year COP was a reasonable period of time for them. Vacancy problems that might develop in other PHAs after that first year were expected to be less severe and could be corrected in two years. In either case, the relief provided was expected to be for a finite period and not to be prolonged by extensions of the timeframe or the submission of new COPs from the same PHAs.

Since the rule authorizing COPs was adopted in 1986, nearly all COPs are due to expire by sometime in 1991. The expiration of a PHA's COP will mean that it will have to adjust from the occupancy rate acceptable as the goal under the COP, such as 85%, to the standard rate prescribed under the rule—97% under the current rule, or 98% under this proposed rule. While the Department has occasionally granted waiver requests from PHAs to extend the period of a COP, any COP that would extend beyond the effective date of a final rule based on this proposed rule will be terminated by this rule. This proposed rule will actually ease that transition to a standard occupancy rate by providing some subsidy for "excess vacant units", i.e., 20% of the AEL for vacant units in excess of 2%. (There will be a minor disadvantage of excluding from the units subsidized the on-schedule modernization units.)

Experience under the existing rule indicates that there are two groups of PHAs that might have some difficulties in the transition to the new rule. The first group is very small PHAs that are located in towns experiencing population loss, economic dislocations and other factors outside there control that are contributing to a lack of demand. The second group is large PHAs that are classified as "troubled authorities," whose vacancy problems are of such a magnitude and complexity that a short-term solution is not feasible.

The Department solicits comments from these PHAs or from representatives of their associations. Respondents are invited to recommend alternate or additional provisions that would enable these two groups to increase occupancy levels consistent with the objectives of the proposed Rule. In addition, the Department is also interested in comments on appropriate criteria for accommodating the needs of affected PHAs within the framework of the proposed rule.

(d) *Conditions under which a unit is considered eligible for subsidy.* The proposed rule carefully and explicitly limits the universe of units eligible for full operating subsidy, to units actually occupied as residences plus a limited number of expressly defined other categories of eligible units. All other units are treated as "excess vacancies" and there operating subsidy eligibility is limited accordingly.

Units Approved for Anti-Drug or Economic Self-Sufficiency Activities

The Department will allow payment of operating subsidies for some public housing units where such units are used to support anti-drug or economic self-sufficiency activities for public housing tenants. Procedures for requesting approval of such payments will be contained in the Performance Funding System (PFS) Handbook, 7475.13 REV. Approval will be limited to one site per public housing project and for a period of no more than three years. Renewal of the approval to allow payments may be made if it can be demonstrated that no other sources for paying the operating costs of the unit are available.

The unit must be used for either:

a. *Economic Self-Sufficiency Activities.* Activities directly related to maximizing the number of employed residents. Examples of such services include child care facilities, adult day care, training facilities and literacy programs, space for Resident Management Corporation sponsored resident-operated businesses (consistent with local law).

b. *Anti-Drug Programs.* Activities directly related to ridding the project of illegal drugs and drug-related crime. Examples of such programs include use by law enforcement officials, drug rehabilitation facilities, educational programs, Youth Sports Initiatives, and Boys and Girls Clubs.

Approvals will not be limited to these specific examples and other services of the same nature may be approved. The activities must be directed toward and for the benefit of residents of the development.

It must be demonstrated that space for the service or program is not available elsewhere and that the space to be used is safe and suitable for its intended use or that resources are committed to make the space safe and suitable. If units are to be used temporarily pending demolition or disposition, only minimal funds may be expended for rehabilitation to make the unit safe and suitable. The availability of existing office or community space in the project should be considered.

It must be demonstrated satisfactorily that other funding is not available to pay for the operating costs. Such a demonstration should show that other Federal, State, local or private sources are not available. All rental income generated as a result of the activity must be reported as income in the operating subsidy calculation.

Only one site (involving one or more contiguous units) in a public housing development will be approved for operating subsidy for economic self-sufficiency services or anti-drug programs. The number of units should be the minimum necessary to support the service or program.

The PHA/IHA must submit a certification with its Operating Budget that the units are being used for the purpose for which they were approved and that any rental income generated as a result of the activity is reported as income in the operating subsidy calculation. The PHA/IHA must maintain specific documentation of the units covered. Such documentation should include a listing of the units, the street addresses, and project/management control numbers.

Under the current rule, when a PHA/IHA converts a unit from dwelling to nondwelling use, the operating subsidy eligibility amount automatically decreases, because it is based on an approved expense level for each "unit month available", which is, in turn, based on the number of dwelling units and the number of months which they are available for occupancy. This change would be implemented by the addition of another category of other costs in 990.108 in the operating subsidy determination that will compensate PHAs/IHAs with units that meet the criteria outlined in this section.

As of the effective date of the final rule, PHAs/IHAs would be eligible for an additional amount of subsidy calculated as follows: the Allowable Expense Level for the requested year shall be multiplied by the number of unit months eligible under this section.

Treatment of Units Combined With Other Units

The combination of units issue is the subject of another rulemaking, PFS–Energy Conservation Savings, etc., (Docket No. R–91–1453, FR–2504–F–01, RIN 2577–AA49). However, this rule adopts the same position as is being taken in that pending rule. Subsidy level is preserved when units are combined if same number of people as were previously served are housed. In the case of units combined to accommodate larger families, the determination of the number of people served is to be based on a comparison of bedroom counts before and after conversions.

In the absence of an objective method of comparing units, counting the numbers of people residing in a unit or units before and after conversion could be subject to distortions because of vacancies, situations where families are doubled-up and/or otherwise overcrowded, and by cases where families are temporarily assigned to larger-than-appropriate units. Therefore, the number of people served in a unit is defined according to the formula [(2 × No. of Bedrooms) minus 1], which yields the average number of people that would be served under optimal circumstances.

Development of Reduced AEL Payments

The Department proposes to reduce operating subsidy payments for excess vacant units to a level of 20% of the PHA's/IHA's Allowable Expense Level (AEL). It is believed that this figure reasonably reflects the level of expenses directly related to operation and maintenance of vacant units. For example, using data from year-end financial statements reported by PHAs during 1988, the 20% figure would cover approximately half the per-unit amounts recorded in the Total Routine Expense accounts for Accounting and audit fees, Utilities-related Labor, and Protective Services, and about one-quarter of the cost of Ordinary Maintenance and Operation (including employee benefits in all cases).

The costs now covered for units approved for demolition or disposition are documented costs. This rule places a cap on those costs of 20% of AEL, to treat these units in a similar way to the excess vacant units. The Department believes this will provide some incentive to proceed with approved plans rather than to continue to incur holding costs for these units. The category of units being condemned by a public body has been added in this rule because units are occasionally removed from the housing inventory in this manner without any HUD approval process, and they are to be treated the same way for subsidy purposes as they would be if the PHA had acted first to obtain approval of removing them from the inventory. No further subsidy will be paid after the units have been deprogrammed by removal from the ACC.

Year End Adjustment

At the end of each fiscal year, a PHA will review its actual occupancy and vacancy experience and compare it to the occupancy and vacancy estimates used for determining operating subsidy

eligibility. This review may result in additional operating subsidy eligibility or a reduction in eligibility and an amount owed to HUD. Because a vacant unit may be eligible to receive no subsidy, 20% of subsidy or 100% of subsidy, HUD deems a year end adjustment to be necessary to ensure that the payments made for the vacant units were appropriate and justified.

VI. Section-by-Section Analysis

Sections 990.102 and 905.102—Definitions

The proposed rule would revise the definition of Unit Months Available by expanding the categories of units for which operating subsidies would be computed separately or that would be ineligible for operating subsidy.

Sections 990.108 and 905.720—Other Costs

Paragraph (b) is re-written in its entirety to identify categories of units not occupied by families under leases, so specify the terms and conditions under which these categories would be excepted from calculation of "Unit Months Available", and to delineate the operating costs attributable to each of the identified categories and the bases for determining amounts of operating subsidy for which units in those categories would be eligible.

Sections 990.109 and 905.725—Projected Operating Income Level

Paragraph (a) has been rewritten to clarify the statement of policy, but has not been substantively amended.

Paragraph (b)(3)(i) is revised to increase from 97% to 98% the occupancy rate on which eligibility for operating subsidies is to be based.

Paragraph (b)(3)(ii) has been revised to make clear that a PHA/IHA can use its Actual Occupancy Percentge as its Projected Occupancy Percentage in calculating eligibility for operating subsidies if the PHA/IHA has five or fewer vacant units. This is a protection for relatively small PHSs/IHAs where a small number of vacant units would result in a relatively high vacancy rate.

The proposed rule eliminates the separate identification formerly at paragraph (b)(3)(ii) of "Vacant, On-schedule Modernization Units" because units under modernization are no longer differentiated from other vacant units, but are subject to the same limitations on operating subsidy eligibility as any other vacant units.

Paragraphs (b)(3)(iii) and (iv) formerly described the applicability of Comprehensive Occupancy Plans and the use of Projected Occupancy Percentages lower than 97% (or five units). The proposed rule removes all such discussion, and the revised paragraph (b)(3)(iii) makes the 98% occupancy rule uniformly applicable to all PHAs/IHAs.

Sections 990.110 and 905.730—Adjustments

A new paragraph (e) describes a procedure for PHAs/IHAs to request adjustments to the projected occupancy percentage at the end of a budget year. HUD deems it imperative that projected occupancy percentages be up-dated for purposes of year-end adjustments in the amounts of operating subsidy for which a PHA/IHA is eligible: the new paragraph (e) authorizes HUD to withhold operating subsidy obligations pending receipt of the required adjustment data.

The material on "Additional HUD-Initiated Adjustments" is moved to a new paragraph (f), and is unchanged.

Sections 990.117 and 905.760—Determining Actual Operating Percentages

The last sentence in these sections is revised to recapitulate the requirement for a year-end adjustment of the projected occupancy percentage, and replaces a less-specific description of the permissibility of such adjustments.

Sections 990.118 and 905.770—Comprehensive Occupancy Plan Requirements

These sections are deleted in their entirety.

VII. Findings and Certifications

A. Environmental Impact

A Finding of No Significant Impact with respect to the environment has been made in accordance with HUD regulations in 24 CFR part 50, which implement section 102(2)(C) of the National Environmental Policy Act of 1969, 42 U.S.C. 4332. The Finding of No Significant Impact is available for public inspection and copying between 7:30 a.m. and 5:30 p.m. weekdays in the Office of the Rules Docket Clerk, Room 10276, 451 Seventh Street, SW., Washington, DC 20410.

B. Economic Impact

This rule does not constitute a "major rule" as that term is defined in section 1(b) of Executive Order 12291 issued by the President on February 17, 1981, and therefore no regulatory impact analysis is necessary. It will not have an annual effect on the economy of $100 million or more. Furthermore, it will not cause a major increase in cost or prices for consumers, individual industries, Federal, State, or local government agencies, or geographic regions, not have a significant adverse effect on competition, employment, investment, productivity, innovation, or on the ability of the United States-based enterprises to compete with foreign-based enterprises in domestic or export markets.

C. Impact on Small Entities

Under the Regulatory Flexibility Act (5 U.S.C. 601), the Undersigned hereby certifies that this rule would not have a significant economic impact on a substantial number of small entities. The rule will result in tighter eligibility criteria for low-income public housing operating subsidies and may impact those PHAs/IHAs with large numbers of vacant units. However, HUD's research incident to Operation Occupancy indicates that high-vacancy PHAs are relatively few in number (and high-vacancy IHAs virtually nonexistent), and that a preponderance of the program's vacancies are in a very limited number of the larger PHAs. Most PHAs/IHAs will be unaffected by this rule.

D. Federalism

The General Counsel, as the Designated Official under section 6(a) of Executive Order 12612, Federalism, has determined that the policies contained in this rule would not have federalism implications and, thus, are not subject to review under the Order. The rule will refine the criteria under which operating subsidies are paid on HUD-assisted housing owned and operated by PHAs/IHAs but will not interfere with State or local governments functions.

E. Impact on Family

The General Counsel, as the Designated Official under Executive Order 12606, The Family, has determined that this rule would not have potential significant impact on family formation, maintenance, and general well-being, and, thus, is not subject to review under the Order. The rule involves the amount of funding that a PHA/IHA should receive under a refinement of an existing procedure.

F. Regulatory Agenda

This rule was listed as item number 1398 under the Office of Public and Indian Housing in the Department's Semiannual Agenda of Regulations published on April 22, 1991 (56 FR 17360, 17408) pursuant to Executive order 12291 and the Regulatory Flexibility Act.

G. Catalog

The Catalog of Federal Domestic Assistance Program numbers for this rule are 14.145, 14.146, and 14.147.

H. Information Collections

The following chart provides estimates of public reporting burden of the provisions in this proposed rule that contain information collections. The estimates include the time for reviewing the instructions, searching existing data sources, gathering and maintaining the data needed, and completing and reviewing the collections of information.

Comments regarding the burden estimates or any other aspect of these information collections, including suggestions for reducing the burden, should be sent to the Department of Housing and Urban Development, Rules Docket Clerk, at the address stated above, and to the Office of Information and Regulatory Affairs, Room 3001, Office of Management and Budget, Washington, DC 20503, Attention: Wendy Swire, Desk Officer for HUD.

TABULATION OF ANNUAL REPORTING BURDEN—CONTRIBUTIONS FOR OPERATING SUBSIDIES—PERFORMANCE FUNDING SYSTEM; LOW-INCOME PUBLIC HOUSING—VACANCY PROPOSED RULE

Description of information collection	Section of 24 CFR affected	No. of respondents	No. of responses per respondent	Total annual responses	Hours per responses	Total hours
PHAs/IHAs required to list units approved for deprogramming and provide supporting documentation.	905.720(b)(1) 990.108(b)(1)	2,400	1	2400	1	2,400
PHAs/IHAs must certify with their Operating Budget that units are being used for approved purpose. Maintain documentation on units.	905.720(b)(2)(i)(E) 990.108(b)(2)(i)(E)	2,400	1	2400	½	1,200
PHAs/IHAs must determine projected percentage of occupancy for all units using Form HUD-52728.	905.725(b)(3) 990.109(b)(3)	2,400	1	2400	¾	1,800
PHAs/IHAs must submit a year-end adjustment regarding the projected occupancy percentage approved for operating subsidy eligibility purposes using Form HUD-52728A.	905.730(e) 990.110(e)	2,400	1	2400	¾	1,800
Total reporting burden						7,200

List of Subjects

24 CFR Part 905

Grant programs: Indians; Low and moderate income housing; Homeownership; Public housing.

24 CFR Part 990

Grant programs: Housing and community development; Low and moderate income housing; Public housing.

Accordingly, 24 CFR parts 905 and 990 are proposed to be revised as follows:

PART 905—INDIAN HOUSING PROGRAMS

1. The authority citation for part 905 would continue to read as follows:

Authority: Secs. 201, 202, 203, 205, United States Housing Act of 1937, as added by the Indian Housing Act of 1988 (Pub. L. 100-358) (42 U.S.C. 1437aa, 1437bb, 1437cc, and 1437ee); sec. 7(b), Indian Self-Determination and Education Assistance Act (25 U.S.C. 450e(b)); sec. 7(d), Department of Housing and Urban Development Act (42 U.S.C. 3535(d)).

2. In § 905.102, the definition of "Unit Months Available" would be revised to read as follows:

§ 905.102 Definitions.

* * * * *

Unit Months Available. Project Units multiplied by the number of months the Project Units are available for occupancy during a given IHA fiscal year.

(1) For purposes of this part, a unit is considered available for occupancy from the date on which the End of the Initial Operating Period for the Project is established until the time it is:

(i) Approved by HUD for nondwelling use;

(ii) Lost when two or more dwelling units are redesigned or substantially rehabilitated to combine them into a single larger dwelling unit;

(iii) Vacated and approved for demolition or disposition; or

(iv) Vacated and being condemned by a public body.

(2) Vacant units in excess of the higher of 5 vacant units, or the product derived by taking 2 percent of the total units available for occupancy after adjusting for vacant units in the above four categories, are also excluded from Unit Months Available.

* * * * *

3. In § 905.720, paragraph (b) would be revised to read as follows:

§ 905.720 Other costs.

* * * * *

(b) *Costs attributable to certain units not included in the Unit Months Available.* (1) Vacant units approved by HUD for demolition or disposition or being condemned by a public body may receive operating subsidy for up to 20 percent of the AEL until the units are disposed of, demolished, or condemned and removed from the coverage of the ACC. These units shall be listed by the IHA and supporting documentation regarding direct costs attributable to such units shall be included as a part of the operating budget in which the IHA requests operating subsidy for these units. If the IHA requires assistance in this matter, the HUD Field Office should be contacted.

(2) Units approved for nondwelling use may receive operating subsidy under certain circumstances.

(i) Units approved for temporary nondwelling use to promote economic self-sufficiency services and anti-drug activities are eligible for operating subsidy under certain conditions, and the cost attributable to them is to be included in the operating budget. If a unit satisfies the conditions stated below, it will be eligible for subsidy at the rate of the AEL for the number of months it is devoted to such use. Renewal of the approval to allow payments after that period may be made only if it can be demonstrated that no other sources for paying the operating costs of the unit are available:

(A) The unit must be used for either economic self-sufficiency activities directly related to maximizing the number of employed residents or anti-drug programs directly related to ridding the project of illegal drugs and drug-related crime. The activities must be directed toward and for the benefit of residents of the development.

(B) It must be demonstrated that space for the service or program is not available elsewhere in the locality.

(C) It must be demonstrated satisfactorily that other funding is not

available to pay for the operating costs. All rental income generated as a result of the activity must be reported as income in the operating subsidy calculation.

(D) Only one site (involving one or more contiguous units) per Indian housing project may be approved for economic self-sufficiency services or anti-drug programs, and the number of units involved should be the minimum necessary to support the service or program.

(E) The IHA must submit a certification with its Operating Budget that the units are being used for the purpose for which they were approved and that any rental income generated as a result of the activity is reported as income in the operating subsidy calculation. The IHA must maintain specific documentation of the units covered. Such documentation should include a listing of the units, the street addresses, and project/management control numbers.

(ii) Units approved for temporary nondwelling use because they are utilized for IHA-related activities other than those given in (i) above, are not eligible to receive operating subsidy.

(iii) Costs attributable to dwelling units approved for permanent nondwelling use are not eligible to receive operating subsidy and must not be included in the IHA's operating budget.

(3) Units approved for consolidation or combination into a single larger unit may receive operating subsidy in accordance with § 905.720(e).

(4) Costs attributable to the greater of the vacant units in excess of 2 (two) percent of the total Units Available for Occupancy or 5 (five) vacant units shall be included as part of the operating budget in which the IHA requests operating subsidy for these units. Operating subsidy for these excess vacant units, however, shall be limited to 20 percent of the Allowable Expense Level (AEL).

* * * * *

4. In § 905.725, paragraphs (a) and (b)(3) would be revised to read as follows:

§ 905.725 Projected operating income level.

(a) *Policy.* PFS determines the amount of operating subsidy for a particular IHA based in part upon a projection of the actual dwelling rental income and other income for the IHA. The projection of dwelling rental income is obtained by computing the average monthly dwelling rental charge per unit for the IHA, and projecting this amount for the Requested Budget Year by applying an upward trend factor (subject to updating) of 3 percent. This amount will be multiplied by the Projected Occupancy Percentage for the Requested Budget Year which has been determined in accordance with § 905.725(b). Nondwelling income is projected by the IHA subject to adjustment by HUD. There are special provisions at 905.725(c) for the projection of dwelling rental income for new projects.

(b) *Computation of projected average monthly dwelling rental income.* The projected average monthly dwelling rental income per unit for the IHA is computed as follows:

* * * * *

(3) *Projected Occupancy Percentage.* The IHA shall determine its projected percentage of occupancy for all Project Units (Projected Occupancy Percentage), as follows:

(i) If the IHA has five or fewer vacant units, it may use its Actual Occupancy Percentage (see § 905.760).

(ii) All other IHAs are required to use 98 percent as their Projected Occupancy Percentage.

* * * * *

5. In § 905.730, paragraph (e) would be redesignated as paragraph (f), and a new paragraph (e) would be added, to read as follows:

§ 905.730 Adjustments.

* * * * *

(e) *Adjustments to determination of projected occupancy percentage.* An IHA receiving operating subsidy under § 905.705, excluding those IHAs that receive operating subsidy solely for IA audit (§ 905.720(a)), must submit a year-end adjustment regarding the projected occupancy percentage approved for operating subsidy eligibility purposes. This adjustment, which compares the Actual Occupancy Percentage for the IHA fiscal year to the estimates used for subsidy eligibility purposes, shall be submitted on a format prescribed by HUD. This request shall be submitted to the HUD Field Office by a deadline established by HUD, which will be during the IHA fiscal year following the IHA fiscal year for which an operating subsidy was received by the IHA, exclusive of a subsidy solely for IA audit costs. Failure to submit the required adjustment of the projected occupancy percentage by the due date may, in the discretion of HUD, result in the withholding of approval of future obligation of operating subsidies until it is received. Adjustments under this subsection normally will be made in the IHA fiscal year following the year for which the adjustment is applicable.

* * * * *

§ 905.760 [Amended]

6. In § 905.760, the last sentence would be removed and the following sentence would be added in its place: "At the end of the year, the IHA shall submit a year-end adjustment with respect to the Actual Occupancy Percentage approved for operating subsidy purposes in accordance with § 905.730(e)."

§ 905.770 [Removed]

7. Section 905.770 would be removed.

PART 990—ANNUAL CONTRIBUTIONS FOR OPERATING SUBSIDY

8. The authority citation for part 990 would continue to read as follows:

Authority: Sec. 9, United States Housing Act of 1937 (42 U.S.C. 1437g); sec. 7(d), Department of Housing and Urban Development Act (42 U.S.C. 3535(d)).

9. In § 990.102, the definition of "Unit Months Available" would be revised to read as follows:

§ 990.102 Definitions.

* * * * *

Unit Months Available. Project Units multiplied by the number of months the Project Units are available for occupancy during a given PHA fiscal year.

(1) For purposes of this part, a unit is considered available for occupancy from the date on which the End of the Initial Operating Period for the Project is established until the time it is:

(i) Approved by HUD for nondwelling use;

(ii) Lost when two or more dwelling units are redesigned or substantially rehabilitated to combine them into a single larger dwelling unit;

(iii) Vacated and approved for demolition or disposition; or

(iv) Vacated and being condemned by a public body.

(2) However, vacant units is excess of the higher of 5 vacant units, or the product derived by taking 2 percent of the total units available for occupancy after adjusting for vacant units in the above four categories, are also excluded from Unit Months Available.

* * * * *

10. In § 990.108, paragraph (b) would be revised to read as follows:

§ 990.108 Other costs.

* * * * *

(b) *Cost attributable to certain units not included in the unit months available.*

(1) Vacant units approved by HUD for demolition or disposition or being condemned by a public body may receive operating subsidy for up to 20

percent of the AEL until the units are disposed of, demolished, or condemned and removed from the coverage of the ACC. These units shall be listed by the PHA and supporting documentation regarding direct costs attributable to such units shall be included as a part of the operating budget in which the PHA requests operating subsidy for these units. If the PHA requires assistance in this matter, the HUD Field Office should be contacted.

(2) Units approved for nondwelling use may receive operating subsidy under certain circumstances.

(i) Units approved for temporary nondwelling use to promote economic self-sufficiency services and anti-drug activities are eligible for operating subsidy under certain conditions, and the cost attributable to them is to be included in the operating budget. If a unit satisfies the conditions stated below, it will be eligible for subsidy at the rate of the AEL for the number of months it is devoted to such use. Approval will be given for a period of no more than three years. Renewal of the approval to allow payments after that period may be made only if it can be demonstrated that no other sources for paying the operating costs of the unit are available:

(A) The unit must be used for either economic self-sufficiency activities directly related to maximizing the number of employed residents or anti-drug programs directly related to ridding the project of illegal drugs and drug-related crime. The activities must be directed toward and for the benefit of residents of the development.

(B) It must be demonstrated that space for the service or program is not available elsewhere in the locality.

(C) It must be demonstrated satisfactorily that other funding is not available to pay for the operating costs. All rental income generated as a result of the activity must be reported as income in the operating subsidy calculation.

(D) Only one site (involving one or more contiguous units) per public housing project may be approved for economic self-sufficiency services or anti-drug programs, and the number of units involved should be the minimum necessary to support the service or program.

(E) The PHA must submit a certification with its Operating Budget that the units are being used for the purpose for which they were approved and that any rental income generated as a result of the activity is reported as income in the operating subsidy calculation. The PHA must maintain specific documentation of the units covered. Such documentation should include a listing of the units, the street addresses, and project/management control numbers.

(ii) Units approved for temporary nondwelling use because they are utilized for PHA-related activities other than those given in (i) above, are not eligible to receive operating subsidy.

(iii) Costs attributable to dwelling units approved for permanent nondwelling use are not eligible to receive operating subsidy and must not be included in the PHA's operating budget.

(3) Units approved for consolidation or combination into a single larger unit may receive operating subsidy in accordance with § 990.108(e).

(4) Costs attributable to the greater of the vacant units in excess of 2 (two) percent of the total Units Available for Occupancy or 5 (five) vacant units shall be included as part of the operating budget in which the PHA requests operating subsidy for these units. Operating subsidy for these excess vacant units, however, shall be limited to 20 percent of the Allowable Expense Level (AEL).

* * * * *

11. In § 990.109, paragraphs (a) and (b)(3) would be revised to read as follows:

§ 990.109 Projected operating income level.

(a) *Policy.* PFS determines the amount of operating subsidy for a particular PHA based in part upon a projection of the actual dwelling rental income and other income for the PHA. The projection of dwelling rental income is obtained by computing the average monthly dwelling rental charge per unit for the PHA, and projecting this amount for the Requested Budget Year by applying an upward trend factor (subject to updating) of 3 percent. This amount will be multiplied by the Projected Occupancy Percentage for the Requested Budget Year which has been determined in accordance with § 990.109(b)(3). Nondwelling income is projected by the PHA subject to adjustment by HUD. There are special provisions at § 990.109(c) for the projection of dwelling rental income for new projects.

(b) *Computation of projected average monthly dwelling rental income.* The projected average monthly dwelling rental income per unit for the PHA is computed as follows:

* * * * *

(3) *Projected Occupancy Percentage.* The PHA shall determine its projected percentage of occupancy for all Project Units (Projected Occupancy Percentage), as follows:

(i) If the PHA has five or fewer vacant units, it may use its Actual Occupancy Percentage (see § 990.117).

(ii) All other PHAs are required to use 98 percent as their Projected Occupancy Percentage.

* * * * *

12. § 990.110, paragraph (e) would be redesignated as paragraph (f), and a new paragraph (e) would be added, to read as follows:

§ 990.110 Adjustments.

* * * * *

(e) *Adjustments to determination of projected occupancy percentage.* A PHA receiving operating subsidy under § 990.104, excluding those PHAs that receive operating subsidy solely for IA audit (§ 990.108(a)), must submit a year-end adjustment regarding the projected occupancy percentage approved for operating subsidy eligibility purposes. This adjustment, which compares the Actual Occupancy Percentage for the PHA fiscal year to the estimates used for subsidy eligibility purposes, shall be submitted on a format prescribed by HUD. This request shall be submitted to the HUD Field Office by a deadline established by HUD, which will be during the PHA fiscal year following the PHA fiscal year for which an operating subsidy was received by the PHA, exclusive of a subsidy solely for IA audit costs. Failure to submit the required adjustment of the projected occupancy percentage by the due date may, in the discretion of HUD, result in the withholding of approval of future obligation of operating subsidies until it is received. Adjustments under this subsection normally will be made in the PHA fiscal year following the year for which the adjustment is applicable.

* * * * *

§ 990.117 [Amended]

13. In § 990.117, the last sentence would be removed and the following sentence would be added in its place: "At the end of the year, the PHA shall submit a year-end adjustment with respect to the Actual Occupancy Percentage approved for operating subsidy purposes in accordance with § 990.110(e)."

§ 990.118 [Removed]

14. Section 990.118 would be removed.

Dated: August 5, 1991.

Joseph G. Schiff,

Assistant Secretary for Public and Indian Housing.

[FR Doc. 91-21319 Filed 9-5-91; 8:45 am]

BILLING CODE 4210-33-M

federal register

Friday
September 6, 1991

Part VIII

Department of Labor

Employment Standards Administration, Wage and Hour Division

29 CFR Part 541

Exemptions From Minimum Wage and Overtime Compensation Requirements of the Fair Labor Standards Act; Public Sector Employers; Interim Rule

DEPARTMENT OF LABOR

Employment Standards Administration; Wage and Hour Division

29 CFR Part 541

Exemptions From Minimum Wage and Overtime Compensation Requirements of the Fair Labor Standards Act; Public Sector Employers

AGENCY: Wage and Hour Division, Employment Standards Administration, Labor.

ACTION: Interim final rule; request for comments.

SUMMARY: These interim final regulations relative to governmental pay practices under Regulations, 29 CFR part 541, contain revised criteria for exemption from the minimum wage and overtime compensation requirements of the Fair Labor Standards Act (FLSA) for executive, administrative, and professional employees. The purpose of this revision is to provide an exception from certain provisions requiring payment "on a salary basis" applicable only to public sector employees.

DATES: Effective Date: The interim final rule is effective on September 6, 1991.

Comments are due on or before October 7, 1991.

ADDRESSES: Submit written comments to John R. Fraser, Acting Administrator, Wage and Hour Division, Employment Standards Administration, U.S. Department of Labor, room S-3502, 200 Constitution Avenue, NW., Washington, DC 20210. Commenters who wish to receive notification of receipt of comments are requested to include a self-addressed, stamped post card.

FOR FURTHER INFORMATION CONTACT: J. Dean Speer, Director, Division of Policy and Analysis, Wage and Hour Division, Employment Standards Administration, U.S. Department of Labor, room S-3506, 200 Constitution Avenue, NW., Washington, DC 20210; telephone (202) 523-8412 (this is not a toll-free number).

SUPPLEMENTARY INFORMATION:

I. Background

Since the enactment of the FLSA in 1938, Congress and the Supreme Court have each periodically acknowledged the special circumstances of, and the different treatment to be accorded to, governmental employers and employees under the FLSA, as distinguished from employment in the private sector.

The regulations governing exemption from the requirements of the Act for employees who are "executive, administrative, professional * * *" generally require that such employees meet regulatory standards with respect to both their duties and their compensation. Compensation must be greater than the amount specified in the regulations, and must be "on a salary basis." These matters are defined and explained in 29 CFR part 541. These regulations were adopted prior to the extension of FLSA coverage to public employees and, therefore, make no distinction between public and private employment.

In administering the FLSA in the public sector [1], the Department has become aware that few public employers compensate employees in a manner that meets the "on a salary basis" requirement for exemption under the current regulation. Governmental payroll systems commonly prohibit paying employees for time not actually worked. Systems of leave in the public sector (as often is the case in the private sector) are generally relied on as the exclusive method to permit employees who might otherwise not be compensated for periods of absence to avoid reduction of compensation in connection with such absences.

The Department initially attempted to address this problem by means of an enforcement policy, adopted by the Wage and Hour Division on January 9, 1987. The policy, which is still in effect, provides that the Division, will not deny exemption pursuant to section 13(a)(1) of the FLSA to an otherwise exempt executive, administrative, or professional employee in the public sector whose pay is reduced by deductions for absence(s) of less than a day for personal reasons, or because of illness or accident, because the employee does not have, or has exhausted available paid leave for such absence(s). This policy applies only where applicable State or local law, in effect before April 15, 1986, prohibits payment to employees for such absences which are not covered by paid leave.

The Wage and Hour Division's 1987 enforcement policy does not affect the rights of public employees to file private lawsuits under section 16(b) of the FLSA. Since the U.S. Supreme Court's decision in *Garcia* v. *San Antonio Metropolitan Transit Authority*, 469 U.S. 528 (1985), there have been numerous lawsuits by public employees to recover overtime pay. The courts in these cases have approached the construction of the regulations in different fashions, and have reached differing results.

Some courts have found the exemption to be inapplicable for the sole reason that the public entity's pay practices did not meet the "on a salary basis" requirement. Construing the existing regulations, some courts have held that employees under a pay system which requires that deductions be made when the employee is absent and has no leave are not paid "on a salary basis" even where no such deductions have occurred. In these circumstances the "salary basis" requirement is not met because the employee's compensation was subject to deductions for absences of less than one day when all accumulated leave was exhausted. See, *e.g.*, *Abshire* v. *County of Kern*, 908 F. 2d 483 (9th Cir. 1990) cert. denied, 111 S.Ct. 785, rehearing denied, 111 S.Ct. 1341 (1991); *Banks* v. *City of North Little Rock*, 708 F. Supp. 1023 (E.D. Ark. 1988); *D'Camera* v. *District of Columbia*, 693 F. Supp. 1208 (D.D.C. 1988); *Hawks* v. *City of Newport News, Va.*, 707 F. Supp. 212 (E.D. Va. 1988).

On the other hand, some courts have considered that even in the above-described circumstances a salary was not subject to deduction where there was no evidence that the employee's pay was ever reduced, that only actual and not "theoretical" deductions could invalidate the salary basis of compensation, and that rare instances of docking pay for absences of less than a day did not defeat the exemption (except in a workweek in which deduction was made). See, *e.g.*, *Atlanta Professional Firefighters Union* v. *Atlanta*, 920 F. 2d 800 (11th Cir. 1991); *Harris* v. *District of Columbia*, 709 F. Supp. 238 (D.D.C. 1989); and *DC Nurses Assn.* v. *District of Columbia*, 29 WH Cases 868 (D.D.C. 1988). Some courts have also allowed application of the "correction" provisions at 29 CFR 541.118(a)(6) to preserve exempt status in cases where the public employer made "inadvertent" deductions from pay for absences of less than a day when leave was exhausted, reimbursed the affected employee for such deductions, and promised future compliance. See *e.g.*, *Hartman* v. *Arlington County, Va.*, 720 F. Supp. 1227 (E.D. Va. 1989), aff'd, 903 F. 2d 290 (4th

[1] With respect to Federal employees, as provided in section 4(f) of FLSA, DOL administers the Act for employees employed in the Library of Congress, United States Postal Service, Postal Rate Commission, and the Tennessee Valley Authority; the Office of Personnel Management (OPM) administers FLSA with respect to all other employees of the Federal government except certain Congressional employees. See 29 U.S.C. section 204(f), Reorganization Plan No. 2 of 1978 (92 Stat. 3783), and section 8 of the Fair Labor Standards Amendments of 1989 (Pub. L. 101-157). Thus, the reference to Federal government employees in this rulemaking extends the revision to those Federal employees with respect to whom DOL is authorized to administer the Act.

Cir. 1990); *Fire Fighters Local 2141* v. *City of Alexandria, Va.*, 720 F. Supp. 1230 (E.D. Va. 1989), aff'd., 912 F. 2d 463 (4th Cir. 1990); *Harkins* v. *City of Chesapeake*, 29 WH Cases 1399 (E.D. Va. 1988); *Chadwick* v. *City of Norfolk, Va.*, 29 WH Cases 1407 (E.D. Va. 1988); and *Sarver* v. *City of Roanoke, Va.*, 29 WH Cases 1442 (W.D. Va. 1989).

The Department has been considering (and continues to consider) a variety of possible changes to the regulations governing the exemption for bona fide executive, administrative, and professional employees, including the particular requirement in the public sector that such employees be paid on a salary basis.

In the meantime, these diverging judicial interpretations and accompanying confusion have developed, resulting in the exposure of governmental employers to potentially enormous and generally unexpected back wage liabilities to employees, some of whom would clearly be exempt if duties and amount of compensation alone were examined. Such unforeseen liabilities could seriously threaten the fiscal integrity of State and local governmental agencies, and could seriously disrupt widespread pay practices that were designed and intended to serve the public trust and were established long before State and local government employees were subject to the Fair Labor Standards Act.

State and local government jurisdictions have varied pay policies. Some of these pay policies are based on constitutional or statutory provisions while others are derived from regulations or policies that have evolved over the years. These pay systems are generally premised on the concept—based on principles of public accountability—that governmental employees should not be paid for time not worked, and that there is a need to be accountable to the taxpayers for the expenditure of public funds.

For these reasons the Department is of the view that public sector pay systems must be analyzed differently from, because they are significantly distinguishable from, private sector pay systems. In the Department's judgment, certain aspects of the existing "salary basis" regulatory requirement for exemption are unduly restrictive when applied in the public sector. These aspects are not, in the Department's judgment, valid indicators in the public sector of the *bona fides* of a claimed exemption under section 13(a)(1). State and local governments are thus inappropriately deprived of the opportunity to apply the section 13(a)(1) exemption to their employees who would otherwise be properly exempt.

While the Department is continuing its overall review of the full range of issues raised by the public comments submitted on its advance notice of proposed rulemaking of November 19, 1985 (50 FR 47696), it is undertaking this separate rulemaking on the specific issue of application of the "salary basis" of payment for public sector employees. As discussed below, it is considered necessary to issue an interim final rule so as to stem any accrual of additional liability to State and local governments while consideration is given to the comments received on the rule.

II. Paperwork Reduction Act

This regulation contains no reporting or recordkeeping requirements.

III. Summary of the Rule

A new § 541.5d is being added that provides that an otherwise exempt public sector employee who is paid according to a pay system that requires the use of paid leave and, absent the use of paid leave, reduces the employee's pay for absences of less than one work-day, will not be disqualified from exemption due to such pay system. This rule also provides that the exemption will not be defeated by deductions from salary caused by budget-required furloughs, which are not regular and recurring, except in the workweek in which such a deduction occurs.

Executive Order 12291

This rule is not considered to be a "major rule" within the meaning of Executive Order 12291, in that under the status quo, most public employers consider otherwise-exempt employees to be exempt, notwithstanding public sector pay systems under which their pay is subject to deductions for absences of less than one day. Furthermore, under current Department of Labor enforcement policy, the exemption would generally not be denied by the Department to such employees. Therefore the rule is not likely to result in: (1) An annual effect on the economy of $100 million or more; (2) a major increase in costs or prices for consumers, individual industries, Federal, State, or local government agencies, or geographic regions; or (3) significant adverse effects on competition, employment, investment, productivity, innovation, or on the ability of United States-based enterprises to compete with foreign-based enterprises in domestic or export markets. Therefore, no regulatory impact analysis is required.

Regulatory Flexibility Analysis

The Department has determined that this rulemaking will not have a significant economic impact on a substantial number of small entities. This conclusion is based on the fact that under the status quo, most public employers consider otherwise-exempt employees to be exempt, notwithstanding public sector pay systems under which their pay is subject to deductions for absences of less than one day. Furthermore, under the current Department of Labor enforcement policy, the exemption would generally not be denied by the Department to such employees. In addition, because no notice of proposed rulemaking is required for the rule under 5 U.S.C. 553(b), the requirements of the Regulatory Flexibility Act pertaining to regulatory flexibility analysis do not apply to this rule. See 5 U.S.C. 601(2).

Publication as an Interim Final Rule

Application of the salary basis test to State and local government employees may result in denial of the exemption to thousands of such employees who have been considered exempt by their employers. The Department considers it inappropriate that public sector employees be denied the exemption because they fail to meet the "on a salary basis" test under pay systems imposed by law, regulation or public policy that were established pursuant to principles of public accountability even before extension of the Act to such employees. Such application could well result in enormous, unforeseen liability of such governments and may threaten their fiscal integrity. For these reasons it has been determined that an interim final rule is appropriate to forestall accrual of additional liability while the Department receives and considers comments in the preparation of any final rule which would be determined to be appropriate. Accordingly, the Secretary finds, pursuant to 5 U.S.C. 553(b)(3)(B), that prior notice and public comment are contrary to the public interest.

For the same reasons, the Secretary also for good cause finds, pursuant to 5 U.S.C. 553(d)(3), that this rule cannot be published 30 days before its effective date.

Document Preparation

This document was prepared under the direction and control of John R. Fraser, Acting Administrator, Wage and Hour Division, Employment Standards Administration, U.S. Department of Labor.

List of Subjects in 29 CFR Part 541

Labor, Minimum wages, Overtime pay, Salaries, Teachers, Wages.

Accordingly, part 541 of title 29 of the Code of Federal Regulations is amended as set forth below.

Signed at Washington, DC, on this 3rd day of September 1991.

Lynn Martin,

Secretary of Labor.

Samuel D. Walker,

Acting Assistant Secretary for Employment Standards.

John R. Fraser,

Acting Administrator, Wage and Hour Division.

PART 541—DEFINING AND DELIMITING THE TERMS "ANY EMPLOYEE EMPLOYED IN A BONA FIDE EXECUTIVE, ADMINISTRATIVE, OR PROFESSIONAL CAPACITY (INCLUDING ANY EMPLOYEE EMPLOYED IN THE CAPACITY OF ACADEMIC ADMINISTRATIVE PERSONNEL OR TEACHER IN ELEMENTARY OR SECONDARY SCHOOLS), OR IN THE CAPACITY OF OUTSIDE SALESMAN"

1. The authority citation for part 541 continues to read as follows:

Authority: 29 U.S.C. 213; Public Law 101–583, 104 Stat. 2871; Reorganization Plan No. 6 of 1950 (3 CFR 1945–53 comp. p. 1004); Secretary's Order No. 13–71 (3 CFR 8755).

2. A new § 541.5d is added to subpart A of part 541 to read as follows:

§ 541.5d Special Provisions Applicable to Public Sector Employers (Federal, State and Local Governments)

(a) A Federal, State or local government employee ("public employee") who otherwise meets the requirements of § 541.118 shall not be disqualified from exemption under §§ 541.1, 541.2, or 541.3 of this part on the basis that such employee is paid according to a pay system established by statute, ordinance, regulation or public policy under which the employee accrues personal leave and sick leave and, absent the use of such accrued leave (because the leave has been exhausted or by the employee's choice), requires the public employee's pay to be reduced ("leave without pay") for absences, for personal reasons or because of illness or injury, of less than one work-day.

(b) Deductions from a public employee's pay that are not regular and recurring for absences due to a budget-required furlough shall not disqualify the employee from being paid "on a salary basis" except in the workweek in which such deductions occurred.

[FR Doc. 91–21341 Filed 9–5–91; 8:45 am]

BILLING CODE 4510–27–M

federal register

Friday
September 6, 1991

Part IX

Department of Labor

Employment Standards Administration, Wage and Hour Division

29 CFR Part 541

Exemptions From Minimum Wage and Overtime Compensation Requirements of the Fair Labor Standards Act; Public Sector Employers; Proposed Rule

DEPARTMENT OF LABOR

Employment Standards Administration; Wage and Hour Division

29 CFR Part 541

Exemptions From Minimum Wage and Overtime Compensation Requirements of the Fair Labor Standards Act; Public Sector Employers

AGENCY: Wage and Hour Division, Employment Standards Administration, Labor.

ACTION: Notice of proposed rulemaking, request for comments.

SUMMARY: The Department of Labor proposes to revise the regulations governing exemption from minimum wage and overtime compensation under the Fair Labor Standards Act (FLSA) for executive, administrative and professional employees in the public sector. This proposal would allow governmental entities to restore eligibility for exemption under the rules governing payment "on a salary basis" at 29 CFR part 541, § 541.118(a)(6), for otherwise-exempt public employees subject to pay systems that provide for the use of paid leave and, when accrued leave is not used, result in deductions from pay for absences of less than one work-day.

DATES: Comments are due on or before October 7, 1991.

ADDRESSES: Submit written comments to John R. Fraser, Acting Administrator, Wage and Hour Division, Employment Standards Administration, U.S. Department of Labor, room S–3502, 200 Constitution Avenue, NW., Washington, DC 20210. Commenters who wish to receive notification of receipt of comments are requested to include a self-addressed, stamped post card.

FOR FURTHER INFORMATION CONTACT: J. Dean Speer, Director, Division of Policy and Analysis, Wage and Hour Division, Employment Standards Administration, U.S. Department of Labor, room S–3506, 200 Constitution Avenue, NW., Washington, DC 20210; telephone (202) 523–8412 (this is not a toll-free number).

SUPPLEMENTARY INFORMATION:

I. Background

Since the enactment of the FLSA in 1938, Congress and the Supreme Court has each periodically acknowledged the special circumstances of, and the different treatment to be accorded to, governmental employers and employees under the FLSA, as distinguished from employment in the private sector.

The regulations governing exemption from the requirements of the Act for employees who are "executive, administrative, professional * * *" generally require that such employees meet regulatory standards with respect both to their duties and their compensation. Compensation must be greater than the amount specified in the regulations, and must be "on a salary basis." These matters are defined and explained in 29 CFR part 541. These regulations were adopted prior to the extension of FLSA coverage to public employees and, therefore, make no distinction between public and private employment.

In administering the FLSA in the public sector [1] the Department has become aware that few public employers compensate employees in a manner that meets the "on a salary basis" requirement for exemption under the current regulation. Governmental payroll systems commonly prohibit paying employees for time not actually worked. Systems of leave in the public sector (as often is the case in the private sector) are generally relied on as the exclusive method to permit employees who might otherwise not be compensated for periods of absence to avoid reduction of compensation in connection with such absences.

The Department initially attempted to address this problem by means of an enforcement policy adopted by the Wage and Hour Division in January 1987. The policy, which it still in effect, provides that the Division will not deny exemption pursuant to section 13(a)(1) of the FLSA to an otherwise exempt executive, administrative, or professional employee in the public sector whose pay is reduced by deductions for absence(s) of less than a day for personal reasons, or because of illness or accident, because the employee does not have, or has exhausted available paid leave for such absence(s). This policy applied only where applicable State or local law in effect prior to April 15, 1986, prohibits payment to employees for such absences which are not covered by paid leave.

The Wage and Hour Division's 1987 enforcement policy does not affect the rights of public employees to file private lawsuits under section 16(b) of the FLSA. Since the U.S. Supreme Court's decision in *Garcia* v. *San Antonio Metropolitan Transit Authority*, 469 U.S. 528 (1985), there have been numerous lawsuits by public employees to recover overtime pay. The courts in these cases have approached the construction of the regulations in different fashions, and have reached differing results.

Some courts have found the exemption to be inapplicable for the sole reason that the public entity's pay practices did not meet the "on a salary basis" requirement. Construing the existing regulations, some courts have held that employees under a pay system which requires that deductions be made when the employee is absent and has no leave are not paid "on a salary basis" even where no such deductions have occurred. In these circumstances the "salary basis" requirement is not met because the employee's compensation was subject to deductions for absences of less than one day when all accumulated leave was exhausted. See, *e.g.*, *Abshire* v. *County of Kern*, 908 F. 2d 483 (9th Cir. 1990) *cert. denied*, 111 S.Ct. 785, *rehearing denied*, 111 S.Ct. 1341 (1991); *Banks* v. *City of North Little Rock*, 708 F. Supp. 1023 (E.D. Ark. 1988); *D'Camera* v. *District of Columbia*, 693 F. Supp. 1208 (D.D.C. 1988); *Hawks* v. *City of Newport News, Va.*, 707 F. Supp. 212 (E.D. Va. 1988).

On the other hand, some courts have considered that even in the above-described circumstances a salary was not subject to deduction where there was no evidence that the employee's pay was ever reduced, that only actual and not "theoretical" deductions could invalidate the salary basis of compensation, and that rare instances of docking pay for absences of less than a day did not defeat the exemption (except in a workweek in which deduction was made). See, *e.g.*, *Atlanta Professional Firefighters Union* v. *Atlanta*, 920 F. 2d 800 (11th Cir. 1991); *Harris* v. *District of Columbia*, 709 F. Supp. 238 (D.D.C. 1989); and *D.C. Nurses Assn.* v. *District of Columbia*, 29 WH Cases 868 (D.D.C. 1988). Some courts have also allowed application of the "correction" provisions at 29 CFR 541.118(a)(6) to preserve exempt status in cases where the public employer made "inadvertent" deductions from pay for absences of less than a day when leave was exhausted, reimbursed the affected employee for such

[1] With respect to Federal employees, as provided in section 4(f) of FLSA, DOL administers the Act for employees employed in the Library of Congress, United States Postal Service, Postal Rate Commission, and the Tennessee Valley Authority; the Office of Personnel Management (OPM) administers FLSA with respect to all other employees of the federal government except certain Congressional employees. See 29 U.S.C. 204(f), Reorganization Plan No. 2 of 1978 (92 Stat. 3783), and § 8 of the Fair Labor Standards Amendments of 1989 (Pub. L. 101–157). Thus, the reference to Federal Government employees in this rulemaking extends the revision to those Federal employees with respect to whom DOL is authorized to administer the Act.

deductions, and promised future compliance. See, *e.g.*, *Hartman* v. *Arlington County, Va.*, 720 F. Supp. 1227 (E.D. Va. 1989), *aff'd*, 903 F. 2d 290 (4th Cir. 1990); *Fire Fighters Local 2141* v. *City of Alexandria, Va.*, 720 F. Supp. 1230 (E.D. Va. 1989), *aff'd*, 912 F. 2d 463 (4th Cir. 1990); *Harkins* v. *City of Chesapeake*, 29 WH Cases 1399 (E.D. Va. 1988); *Chadwick* v. *City of Norfolk, Va.*, 29 WH Cases 1407 (E.D. Va. 1988); and *Sarver* v. *City of Roanoke, Va.*, 29 WH Cases 1442 (W.D. Va. 1989).

The Department has been considering (and continues to consider) a variety of possible changes to the regulations governing the exemption for bona fide executive, administrative, and professional employees, including the particular requirements in the public sector affecting how employees may be paid on a salary basis. (Interim final regulations implementing a special "salary basis" rule for public sector employers are being published separately this date in the **Federal Register**, to be codified at 29 CFR 541.5d.)

In the meantime, these diverging judicial interpretations and accompanying confusion have developed, resulting in the exposure of governmental employers to potentially enormous and generally unexpected back wage liabilities to employees, some of whom would clearly be exempt if duties and amount of compensation alone were examined. The payment of such unforeseen liabilities could seriously threaten the fiscal integrity of State and local governmental agencies, and could seriously disrupt widespread pay practices which were designed and intended to serve the public trust and were established long before State and local government employees were subject to the Fair Labor Standards Act.

For these reasons the Department is of the view that public sector pay systems must be analyzed differently from, because they are significantly distinguishable from, private sector pay systems. In the Department's judgment, certain aspects of the existing "salary basis" regulatory requirement for exemption are unduly restrictive when applied in the public sector. State and local governments are thus inappropriately deprived of the opportunity to apply the section 13(a)(1) exemption to their employees who would otherwise be bona fide exempt.

While the Department is continuing its overall review of the full range of issues raised by the public comments submitted on its advance notice of proposed rulemaking of November 19, 1985 (50 FR 47696), it is undertaking this separate rulemaking proposal on the specific issue of measures that could be taken by public employers to restore the exempt status of public employees who would otherwise have been exempt but for pay systems calling for deductions (i.e., where no actual deductions are made and where actual deductions made are reimbursed) inconsistent with the "on a salary basis" requirement for public sector employees.

This proposal would operate in conjunction with the Department's newly-published interim final rule regarding salary basis in the public sector. (See the interim final rule published separately this date in the **Federal Register**, at 29 CFR 541.5d.) The proposal would, in essence, provide that employees previously subject to deductions under a pay system that now passes muster under § 541.5d, and, with respect to whom actual deductions have been reimbursed, shall be restored to exempt status under § 541.118(a)(6). As with the existing § 541.118(a)(6), this provision deals with a situation which has arisen unexpectedly when some parts, but not all essential parts, of the regulatory requirements for exemption have been met with respect to public sector employees. Unlike the existing § 541.118(a)(6), which deals primarily with occasional "inadvertent" deductions from the pay of employees who are generally paid in a "salary basis" structure, this provision would deal with the effect of past deductions made by virtue of a pay system that may otherwise have resulted in a complete disallowance of the exemption.

The Department seeks comments on all aspects of this proposal, in particular drawing the attention of commenters to legal and other considerations regarding: (1) The retroactive aspects of the proposal; and (2) the fairness of the proposal, both to employers and employees.

II. Paperwork Reduction Act

This regulation contains no reporting or recordkeeping requirements.

III. Summary of the Rule

The rule provides that eligibility for the exemption under the requirement that employees be paid "on a salary basis" will not be defeated in the case of governmental entities that either: (1) Made no deductions from pay for absences of less than one work-day before the effective date of new regulations promulgated at 29 CFR 541.5d (i.e., September 6, 1991), or (2) reimburse otherwise-exempt public employees for deductions from pay made for absences, for personal reasons or because of illness or injury, of less than one work-day that occurred before the effective date of § 541.5d.

Executive Order 12291

This rule is not considered to be a "major rule" within the meaning of Executive Order 12291, in that under the status quo, most public employers consider otherwise-exempt employees to be exempt, notwithstanding public sector pay systems under which their pay is subject to deductions for absences of less than one day. Furthermore, under the current Department of Labor enforcement policy, the exemption would generally not be denied by the Department to such employees. Therefore the rule is not likely to result in: (1) An annual effect on the economy of $100 million or more; (2) a major increase in costs or prices for consumers, individual industries, federal, state, or local government agencies, or geographic regions; or (3) significant adverse effects on competition, employment, investment, productivity, innovation, or on the ability of United States-based enterprises to compete with foreign-based enterprises in domestic or export markets. Therefore, no regulatory impact analysis is required.

Regulatory Flexibility Analysis

The Department has determined that this rulemaking will not have a significant economic impact on a substantial number of small entities. The Secretary has certified to this effect to the Chief Counsel for Advocacy of the Small Business Administration. This conclusion is based on the fact that under the status quo, most public employers consider otherwise-exempt employees to be exempt, notwithstanding that under some public sector pay systems the pay of employees is subject to deductions for absences of less than one day. Furthermore, under current Department of Labor enforcement policy, the exemption would generally not be denied by the Department to such employees.

Document Preparation

This document was prepared under the direction and control of John R. Fraser, Acting Administrator, Wage and Hour Division, Employment Standards Administration, U.S. Department of Labor.

List of Subjects in 29 CFR Part 541

Labor, Minimum wages, Overtime pay, Salaries,Teachers, Wages.

Accordingly, part 541 of Title 29 of the Code of Federal Regulations is proposed to be amended as set forth below.

Signed at Washington, DC, on this 3rd day of September 1991.

Lynn Martin,

Secretary of Labor.

Samuel D. Walker,

Acting Assistant Secretary for Employment Standards.

John R. Fraser,

Acting Administrator, Wage and Hour Division.

PART 541—DEFINING AND DELIMITING THE TERMS "ANY EMPLOYEE EMPLOYED IN A BONA FIDE EXECUTIVE, ADMINISTRATIVE, OR PROFESSIONAL CAPACITY (INCLUDING ANY EMPLOYEE EMPLOYED IN THE CAPACITY OF ACADEMIC ADMINISTRATIVE PERSONNEL OR TEACHER IN ELEMENTARY OR SECONDARY SCHOOLS), OR IN THE CAPACITY OF OUTSIDE SALESMAN"

1. The authority citation for Part 541 continues to read as follows:

Authority: 29 U.S.C. 213; Public Law 101–583, 104 Stat. 2871; Reorganization Plan No. 6 of 1950 (3 CFR 1945–53 comp. p. 1004); Secretary's Order No. 13–71 (3 CFR 8755).

2. The text of existing § 541.118(a)(6) is proposed to be renumbered as paragraph (a)(6 (i) and a new paragraph 541.118(a)(6)(ii) is proposed to be added to part 541 to read as follows:

§ 541.118 Salary basis.

(a) * * *

(6) * * *

(ii) If a Federal, State or local government (i.e., public sector) employer's pay system is as described in § 541.5d, and either:

(A) the public employer has made no actual deductions from the pay of otherwise-exempt public employees for absences, for personal reasons or because of illness or injury, of less than one work-day before the effective date of § 541.5d (i.e., September 6, 1991); or,

(B) The employer reimburses any otherwise-exempt public employees for deductions from salary that were made for absences, for personal reasons or because of illness or injury, of less than one work-day occurring before the effective date of § 541.5d (i.e., September 6, 1991);

then eligibility for exemption for public employees who otherwise meet the requirements of § 541.118 and who were subject to such pay system will not be defeated for failure to pay "on a salary basis."

* * * * *

[FR Doc. 91–21342 Filed 9–5–91; 8:45 am]

BILLING CODE 4510–27–M

federal register

Friday
September 6, 1991

Part X

Department of Defense

48 CFR Part 233

Acquisition Regulations; General Accounting Office Protest Procedures; Interim Rule

DEPARTMENT OF DEFENSE

48 CFR Part 233

Department of Defense, Federal Acquisition Regulation Supplement; GAO Protest Procedures

AGENCY: Department of Defense (DOD).

ACTION: Interim rule with request for comments.

SUMMARY: The Defense Acquisition Regulations (DAR) Council has issued an interim rule amending the Defense Federal Acquisition Regulation Supplement (DFARS) by adding a new subpart 233.1 to implement the General Accounting Office's revised protest procedures which went into effect on April 1, 1991.

Note: This rule amends the 1988 Edition of DFARS, not the 1991 Edition which was published July 31, 1991 (56 FR 36280).

DATES: *Effective Date:* April 1, 1991. For protests filed, against the award of a Government contract, with the General Accounting Office on or after April 1, 1991.

Comment Date: Comments on the interim rule should be submitted in writing at the address shown below on or before October 7, 1991, to be considered in the formulation of the final rule. Please cite DAR Case 91–006D in all correspondence.

ADDRESSES: Interested parties should submit written comments to: Defense Acquisition Regulations Council, ATTN: Mr. Eric Mens, DAR Council, OUSD(A)DP, The Pentagon, Washington, DC 20301–3000. Telefax Number (703) 697–9845.

FOR FURTHER INFORMATION CONTACT: Mr. Eric Mens, (703) 697–7266.

SUPPLEMENTARY INFORMATION:

A. Background

The General Accounting Office (GAO) revised its protest rules (4 CFR part 21) effective April 1, 1991. This DFARS interim rule covers only those changes in GAO's rules which are essential to contracting officers. The most significant of these address the information an agency is required to provide to GAO, protective orders issued by GAO, and formal fact-finding hearings. DFARS 233.104 reflects a substantial rewrite of FAR 33.104 to implement GAO's revised rules, present a more logical order to the protest procedures, and make other editorial improvements. Similar changes have been proposed for FAR 33.104 and will be published at a later date.

"All evaluation documents" are added to the list of documents an agency report must now include (233.104(a)(3)(ii)(D)). In addition to the documents contained in the report, agencies must also make available to GAO any document specifically requested by the protestor (233.104(a)(3)(iii)). GAO's new rules provide interested parties with easier access to documents. Accordingly, DFARS 233.104(a)(5) addresses requests for, and GAO issuance of, protective orders to limit the right to use and disclose released documents. DFARS 233.104(e) provides notice of the GAO's formal fact-finding hearings, with minimal discussion of GAO's detailed procedures. In addition, the terms "work day" or "calendar day" have been used throughout 233.104, consistent with the use of those terms in 31 U.S.C. 3551 and 4 CFR part 21.

B. Determination to Issue an Interim Rule

A determination has been made under the authority of the Secretary of Defense to issue this regulation as an interim rule. This action is necessary because GAO's revised protest rules became effective April 1, 1991. Similar changes proposed for FAR 33.104 will not be published until a later date. Therefore, it is essential that the guidance in the DFARS be revised to conform to the protest rules as expeditiously as possible.

C. Regulatory Flexibility Act

The interim rule is not expected to have a significant economic impact on a substantial number of small entities within the meaning of the Regulatory Flexibility Act, 5 U.S.C. 601 *et seq.* The rule implements GAO's revised protest procedures (4 CFR part 21) by incorporating those revised procedures which are essential to the knowledge of contracting officers; it does not impact the involvement of small entities in the GAO protest process. An initial regulatory flexibility analysis has therefore not been performed. However, comments from small entities concerning the affected DFARS subpart will be considered in accordance with section 610 of the Act. Such comments must be submitted separately and cite 5 U.S.C. 610 (DAR Case 91–610D) in correspondence.

D. Paperwork Reduction Act

The Paperwork Reduction Act (Pub. L. 96–511) does not apply because the interim rule does not impose any recordkeeping requirements or information collection requirements or collection of information from offerors, contractors, or members of the public which require the approval of OMB under 44 U.S.C. 3501, *et seq.*

List of Subjects in 48 CFR Parts 233

Government procurement.

Claudia L. Naugle,

Executive Editor, Defense Acquisition Regulations Council.

Therefore, it is proposed that 48 CFR part 233 be amended as follows:

1. The authority citation for 48 CFR part 233 continues to read as follows:

Authority: 5 U.S.C. 301, 10 U.S.C. 2202, DoD Directive 5000.35, DoD FAR Supplement 201.301.

PART 233—PROTESTS, DISPUTES, AND APPEALS

2. A new subpart 233.1 is added to read as follows:

Subpart 233.1—Protests

233.104 Protests to GAO.

The GAO revised its protest procedures (4 CFR part 21) effective April 1, 1991. Use the procedures in this section instead of those in FAR 33.104 until the FAR is amended to implement GAO's revised procedures.

(a) *General Procedures.*

(1) A protestor is required to furnish a copy of its complete protest to the official or location designated in the solicitation or, in the absence of such a designation, to the contracting officer, no later than one work day after the protest is filed with GAO. The GAO may dismiss the protest if the protestor fails to furnish a complete copy of the protest within one work day.

(2) Immediately after receipt of the GAO's written notice that a protest has been filed, the department/agency shall give notice of the protest to the contractor if the award has been made, or, if no award has been made, to all parties who appear to have a reasonable prospect of receiving award if the protest is denied. The department/agency shall also advise these parties that they may submit their views and relevant information directly to the GAO with a copy to the contracting officer and to other participating interested parties within a specified period of time. Normally, the time specified will be one week.

(3)(i) Upon notice that a protest has been filed with the GAO, the contracting officer shall immediately begin compiling the information necessary for a report to the GAO. The department/agency submit a complete report to the GAO within 25 work days after the GAO notifies the department/agency by telephone that a protest has been filed, or within ten work days after receipt from the GAO of a determination to use

the express option (4 CFR 21.8), unless the GAO—

(A) Advises the department/agency that the protest has been dismissed; or

(B) Authorizes a longer period in response to an department/agency's written request for an extension. Any new date shall be documented in the department/agency's protest file.

(ii) The department/agency report to the GAO shall include a copy of—

(A) The protest;

(B) The offer submitted by the protesting offeror;

(C) The offer which is being considered for award or which is being protested;

(D) All evaluation documents;

(E) The solicitation, including the specifications or portions relevant to the protest;

(F) The abstract of offers of relevant portions;

(G) Any other documents that the department/agency determines are relevant to the protest;

(H) The contracting officer's signed statement settings forth findings, actions, and recommendations and any additional evidence or information deemed necessary in determining the validity of the protest. The statement shall be fully responsive to the allegation of the protest. If the contract action or contract performance continues after receipt of the protest, the report will include the determination(s) prescribed in paragraphs (b) or (c) of this section;

(I) A list identifying the other parties who are being provided copies of the report; and

(J) A list of the documents withheld from the protestor or other interested parties, and the reasons for withholding them. The list shall identify any documents specifically requested by, and withheld from, the protestor.

(iii) In addition to the documents contained in the report, the department/agency shall make available to the GAO any documents specifically requested by the protestor.

(4)(i) At the same time the department/agency submits its report to the GAO, it shall furnish copies of its report to the protestor and other interested parties who have responded to the notice given under paragraph (a)(2) of this section. A party shall receive all relevant documents, except:

(A) Those that the department/agency has decided to withhold from that party for any reason including those covered by a protective order issued by the GAO. Documents covered by a protective order shall be released only in accordance with the terms of the order. Examples of documents the department/agency may decide to exclude from a copy of the report include documents previously furnished to or prepared by a party; classified information; information that would give a party a competitive advantage;

(B) Protestor's documents which the department/agency determines, pursuant to law or regulation, to withhold from any interested party.

(ii)(A) If, within two work days after receipt of the department/agency report, the protestor requests additional documents, the department/agency shall provide the requested documents to the GAO within five work days of receipt of the request.

(B) The additional documents shall also be provided to the protestor and other interested parties within this five-work day period unless the department/agency has decided to withhold them for any reason (see paragraph (a)(4)(i)(A) of this section). This includes any documents covered by a protective order issued by the GAO. Documents covered by a protective order shall be provided only in accordance with the terms of the protective order. A request for protective order to cover additional documents shall be made in accordance with 233.104(a)(5) within this five-work day period.

(C) the department/agency shall notify the GAO of any documents withheld from the protestor and other interested parties and state the reasons for withholding them.

(5) The GAO may issue a protective order to limit the release of particular documents to counsel for the protestor and to counsel for the other interested parties entitled to receive the documents if the documents contain information that is privileged, or if their release would create a competitive advantage (4 CFR 21.3(d)(1)).

(i) *Requests for Protective Orders.* Any party seeking issuance of a protective order shall file its request with the GAO as soon as practicable after the protest is filed, but not more than 20 work days after the protest filing date, with copies furnished simultaneously to all parties.

(ii) *Exclusions and Rebuttals.* Within two work days after receipt of a copy of the protective order request, any party may file with the GAO a request that particular documents be excluded from the coverage of the protective order, or that particular parties or individuals be included in or excluded from the protective order. Copies of the request shall be furnished simultaneously to all parties. Within one work day after receipt of a copy of the request, any rebuttal shall be filed with the GAO, with copies furnished simultaneously to all parties.

(iii) *Additional Documents.* If the existence or relevance of additional documents first becomes evident after a protective order has been issued, any party may request that these documents be covered by the protective order. Any party to the protective order also may request that individuals not already covered by the protective order be included in the order. Requests shall be filed with the GAO, with copies furnished simultaneously to all parties. Any rebuttal to such a request must be filed within one work day after receipt of a copy of the request.

(iv) *Sanctions and Remedies.* The GAO may impose appropriate sanctions for any violation of the terms of the protective order. Improper disclosure of protected information will entitle the aggrieved party to all appropriate remedies under law or equity. The GAO may also take appropriate action against a department/agency which fails to provide documents designated in a protective order.

(6) The protestor and other interested parties are required to furnish a copy of any comments on the department/agency report directly to the GAO within ten work days after receipt of the report, with copies provided to the contracting officer and to other participating parties.

(7) Departments/agencies shall furnish the GAO with the name, title, and telephone number of one or more officials (in both field and headquarters offices, if desired) whom the GAO may contact, who are knowledgeable about the subject matter of the protest. Each department/agency shall be responsible for promptly advising the GAO of any change in the designated officials.

(b) *Protests before award.* (1) When the department/agency has received notice from the GAO of a protest filed directly with the GAO, a contract may not be awarded unless authorized, in accordance with department/agency procedures, by the head of the contracting activity, on a nondelegable basis, upon a written finding that—

(i) Urgent and compelling circumstances which significantly affect the interest of the United States will not permit awaiting the decision of the GAO; and

(ii) Award is likely to occur within 30 calendar days of the written finding.

(2) A contract award shall not be authorized until the department/agency has notified the GAO of the finding in paragraph (b)(1) of this section.

(3) When a protest against the making of an award is received and award will

be withheld pending disposition of the protest, the contracting officer should inform the offerors whose offers might become eligible for award of the protest. If appropriate, those offerors should be requested, before expiration of the time for acceptance of their offer, to extend the time for acceptance to avoid the need for resolicitation. In the event of failure to obtain such extension of offers, consideration should be given to proceeding under paragraph (b)(1) of this section.

(c) *Protests after award.* (1) When the department/agency receives notice of a protest from the GAO after award of a contract, but within ten calendar days after award, the contracting officer shall immediately suspend performance or terminate the awarded contract, except as provided in paragraphs (c) (2) and (3) of this section.

(2) In accordance with department/agency procedures, the head of the contracting activity may, on a nondelegable basis, authorize contract performance, notwithstanding the protest, upon a written finding that—

(i) Contract performance will be in the best interests of the United States; or

(ii) Urgent and compelling circumstances that significantly affect the interests of the United States will not permit waiting for the GAO's decision.

(3) Contract performance shall not be authorized until the department/agency has notified the GAO of the finding in paragraph (c)(2) of this section.

(4) When it is decided to suspend performance or terminate the awarded contract, the contracting officer should attempt to negotiate a mutual agreement on a no-cost basis.

(5) When the department/agency receives notice of a protest filed with the GAO more than ten calendar days after award of the protested acquisition, the contracting officer need not suspend contract performance or terminate the awarded contract unless the contracting officer believes that an award may be invalidated and a delay in receiving the supplies or services is not prejudicial to the Government's interest.

(d) *Findings and notice.* If the decision is to proceed with contract award, or continue contract performance under paragraph (b) or (c) of this section, the contracting officer shall include the written findings or other required documentation in the file. The contracting officer also shall give written notice of the decision to the protestor and any other interested parties.

(e) *Hearings.* The GAO may hold a hearing at the request of the department/agency, a protestor, or other interested party who has responded to the notice in 233.104(a)(2). The GAO may designate representatives of the parties to attend the hearing. The attending parties and the hearing official may question representatives of the parties at the hearing. A recording or transcription of the hearing will normally be made, and copies are available from the GAO for a fee. All parties may file comments on the hearing and report within seven work days of the hearing.

(f) *GAO decision time.* GAO will issue its recommendation on a protest within 90 work days from the date of filing of the protest with the GAO, or within 45 calendar days under the express option (4 CFR 21.8), unless GAO establishes a longer period of time.

(g) *Notice to GAO.* The head of the department/agency or a designee (not below the level of the head of the contracting activity) responsible for the solicitation, proposed award, or award of the contract shall report to the Comptroller General within 60 calendar days of receipt of the GAO's recommendation, if the department/agency has decided not to comply with the recommendation. The report shall explain the reasons why the GAO's recommendation, including any recommendation concerning the award of protest costs (i.e., the costs of filing and pursuing the protest, including reasonable attorneys' fees and bid and proposal preparation), will not be followed by the department/agency.

(h) *Award of protest costs.* Pending a final, nonappealable judicial determination of the constitutionality of 31 U.S.C. 3554(c), a recommended award of protest costs (as defined under paragraph (g) of this section) may be paid by the department/agency out of funds available to or for the use of the department/agency for the acquisition of supplies or services, but such payments may be subject to recoupment by the department/agency if 31 U.S.C. 3554(c) is judicially determined not to be constitutional. Before paying a recommended award of protest costs (as defined under paragraph (g) of this section), department/agency personnel should consult the General Counsel's office of the department/agency. This paragraph (h) applies to all recommended awards of protest costs (as defined under paragraph (g) of this section) which have not yet been paid.

[FR Doc. 91-21173 Filed 9-6-91; 8:45 am]

BILLING CODE 3810-01-M

federal register

Friday
September 6, 1991

Part XI

Department of Health and Human Services

Office of Refugee Resettlement

Refugee Resettlement Program; Availability of Funding for Formula Grants for Fiscal Year 1991 Targeted Assistance for Services to Refugees in Local Areas of High Need; Notice

DEPARTMENT OF HEALTH AND HUMAN SERVICES

Office of Refugee Resettlement

Refugee Resettlement Program; Availability of Funding for Formula Grants for FY 1991 Targeted Assistance for Services to Refugees[1] in Local Areas of High Need

AGENCY: Administration for Children and Families (ACF), HHS.

ACTION: Final notice of availability of funding for formula grants for FY 1991 targeted assistance for services to refugees [1] in local areas of high need.

SUMMARY: This notice announces the availability of funds and award procedures for FY 1991 targeted assistance formula grants for services to refugees under the Refugee Resettlement Program (RRP). These grants are for service provision in localities with large refugee populations, high refugee concentrations, and high use of assistance, and where specific needs exist for supplementation of currently available resources.

A notice of proposed qualification of counties and allocation of funds was published for public comment in the **Federal Register** of May 10, 1991 (56 FR 21862).

An across-the-board sequestration of 0.0013% has reduced the amount available for the targeted assistance formula allocations by $330 and the awards to Florida for the Dade County public schools and Jackson Memorial Hospital by $241. This revision has produced minor adjustments in the allocations for all States. No changes have been made in response to the five comments received.

APPLICATION DEADLINE: The deadline for applications from States for grants under this notice is September 23, 1991. Applications must be received on time.

An application will be considered to be received on time under either of the following two circumstances:

A. The application was sent via the U.S. Postal Service or by private commercial carrier not later than 30 days after publication of the final notice unless it arrives too late to be considered by the reviewers. (Applicants are responsible for assuring that the U.S. Postal Service or private commercial carrier dates the application package. Applicants should be aware that not all post offices or private commercial carriers provide a dated postmark unless specifically instructed to do so.)

B. The application is hand-delivered on or before the closing date to the Division of Grants Management, ACF, 6th floor, 901 D Street SW., Washington, DC 20447. Hand-delivered applications will be accepted during the normal working hours of 8 a.m. to 4:30 p.m., Monday through Friday (excluding Federal legal holidays) up to 4:30 p.m. of the closing date.

Late applications will be returned to the sending agency.

To be considered complete an application package must include a signed original and one copy of Standard Form 424, 424A, and 424B, dated April 1988. A copy should also be sent to the ACF Regional Administrator. The package must also include the following three certifications by the applicant: Drug-Free Workplace, Debarment, and Anti-Lobbying. (We will provide copies of these materials to all targeted assistance States.)

GRANT REGULATIONS: Grants are subject to the administrative regulations published under title 45 of the Code of Federal Regulations, part 74, § § 74.62(a), 74.174(b), 74.304, 74.710, and 74.715, and part 92.

FOR FURTHER INFORMATION ON APPLICATION AND GRANT PROCEDURES, STATES SHOULD CONTACT: Shirley Parker, Division of Grants Management, Administration for Children and Families, 370 L'Enfant Promenade, SW., Washington, DC 20447, telephone (202) 401–4618.

FOR FURTHER PROGRAMMATIC INFORMATION, STATES SHOULD CONTACT: Ron Munia, Office of Refugee Resettlement, Administration for Children and Families, 370 L'Enfant Promenade, SW., Washington, DC 20447, telephone (202) 401-4559.

SUPPLEMENTARY INFORMATION:

I. Purpose and Scope

This notice announces the availability of funds for grants for targeted assistance for services to refugees in counties where, because of factors such as unusually large refugee populations, high refugee concentrations, and high use of public assistance, there exists and can be demonstrated a specific need for supplementation of resources for services to this population.

The Office of Refugee Resettlement (ORR) has available $48,794,366 in FY 1991 funds for the targeted assistance program (TAP) as part of the FY 1991 appropriations for the Department of Health and Human Services (Pub. L. 101–517). The $48,795,000 appropriated was reduced by $634 as the result of a 0.0013% across-the-board sequestration.

The Conference Report on appropriations reads as follows with respect to the targeted assistance funds (H. Conf. Rept. 101–908, p. 27):

The conference agreement for targeted assistance includes the same funding level as provided in fiscal year 1990 to continue the current program of support to communities affected as a result of the massive influx of Cuban and Haitian entrants during the Mariel boatlift. The conference agreement also provides that 10 percent of the total appropriated for targeted assistance be used for grants to localities most heavily impacted by the influx of refugees such as Laotian Hmong, Cambodians, and Soviet Pentecostals, including secondary migrants who entered the United States after October 1, 1979. The conferees expect these grants to be awarded to communities not presently receiving targeted assistance because of previous concentration requirements and other factors in the grant formulas, as well as those who do currently receive targeted assistance grants. This agreement is consistent with the policy established in Public Law 101–166, the fiscal year 1990 Appropriations Act, and Public Law 101–302, the fiscal year 1990 Supplemental Appropriations Act.

The conferees intend that the State of California, which has 49 percent of the nation's refugees, shall be held harmless in the formula allocation of targeted assistance funds as a result of any reductions to the total amount appropriated for the targeted assistance program. California's total share of funding under the formula allocation in fiscal year 1991 should be no less than the percentage share of California's allotment under fiscal year 1990 appropriations, excluding funds appropriated by Public Law 101–302, the fiscal year 1990 Supplemental Appropriations Act. In determining the hold harmless allocation to California, the total amount appropriated for targeted assistance will be used.

[1] In addition to persons admitted to the United States as refugees, eligibility for targeted assistance includes Cuban and Haitian entrants, certain Amerasians from Vietnam who are admitted to the U.S. as immigrants, and certain Amerasians from Vietnam who are U.S. citizens. (See section III of this notice on "Authorization.") The term "refugee," used in this notice for convenience, is intended to encompass such additional persons who are eligible to participate in refugee program services, including the targeted assistance program.

Refugees admitted to the U.S. under admissions numbers set aside for private-sector-initiative admissions are not eligible to be served under the targeted assistance program (or under other programs supported by Federal refugee funds) during their period of coverage under their sponsoring agency's agreement with the Department of State—usually two years from their date of arrival or until the refugee is granted permanent resident alien status.

In accordance with the Conference Report language, the Director of the Office of Refugee Resettlement (ORR) will use the $48,794,366 available for FY 1991 targeted assistance as follows:

• $25,373,070 will be allocated under the updated formula, as set forth in this notice.

• $18,541,859 will be awarded to Florida for the Dade County public schools and Jackson Memorial Hospital, Miami, the same amount as was provided in FY 1990 less the 2.41% reduction required by sec. 514(b) of the FY 1991 Appropriations Act (Pub. L. 101–517) and the 0.0013% sequestration.

• $4,879,437 (10% of the total) will be awarded to the most heavily impacted localities under a competitive grant announcement which has been issued separately to States setting forth application requirements and evaluation criteria. States may apply on behalf of impacted counties that do not receive TAP formula grants as well as those that do.

This notice contains slight changes in requirements from previous years regarding the use of the FY 1991 targeted assistance formula allocations, as follows: (1) Encourages the use of bilingual women on service agency staffs to ensure adequate service access by refugee women; (2) encourages States and counties to treat day care services as a priority employment-related service in order to allow women with children the opportunity to participate in employment services or to accept or retain employment; and (3) clarifies that if a job placement resulting from TAP services has not resulted in sufficient earnings to terminate cash assistance, TAP services may continue to be provided to the refugee as part of a self-sufficiency plan after job placement to help the refugee retain employment or move to self-sufficiency.

The purpose of targeted assistance grants is to provide, through a process of local planning and implementation, direct services intended to result in the economic self-sufficiency and reduced welfare dependency of refugees through job placements.

The targeted assistance program reflects the requirements of section 412(c)(2)(B) of the Immigration and Nationality Act (INA), as amended by the Refugee Assistance Extension Act of 1986 (Pub. L. 99–605), which provides that targeted assistance grants shall be made available "(i) primarily for the purpose of facilitating refugee employment and achievement of self-sufficiency, (ii) in a manner that does not supplant other refugee program funds and that assures that not less than 95 percent of the amount of the grant award is made available to the county or other local entity."

Services funded under the targeted assistance allocations are required to focus primarily on those refugees who, either because of their considerable and protracted use of public assistance or continued difficulty in securing employment, constitute a major resettlement problem for the affected jurisdiction which cannot be addressed without additional services. In order to ensure sufficient emphasis on services to appropriate clients, each State is required to assure that, for each qualified local area, cash assistance recipients (time-eligible and time-expired recipients under any program of the State or locality) will make up a percentage of the FY 1991 targeted assistance clientele which is not less than the State's final FY 1989 dependency rate.

Reflecting section 412(a)(1)(A)(iv) of the INA, the Director expects States to "insure that women have the same opportunities as men to participate in training and instruction." In addition, States are expected to make sure that services are provided in a manner that encourages the use of bilingual women on service agency staffs to ensure adequate service access by refugee women. In order to facilitate refugee self-support, the Director also strongly encourages States to implement strategies which address simultaneously the employment potential of both male and female wage earners in a family unit, particularly in the case of large families. States and counties are encouraged to treat day care services as a priority employment-related service in order to allow women with children the opportunity to participate in employment services or to accept or retain employment. To be eligible for day care funded through targeted assistance, a refugee must be participating in TAP employment services or have accepted employment. For an employed refugee, TAP-funded day care will be limited to 6 months after the refugee becomes employed.

Funds awarded under this program are intended to help fulfill the Congressional intent that "employable refugees should be placed on jobs as soon as possible after their arrival in the United States" (section 412(a)(1)(B) of the INA). Therefore at least 85% of targeted assistance funds are required to support projects which directly enhance refugee employment potential, have specific employment objectives, and are designed to enable refugees to obtain jobs with less than one year's participation in the targeted assistance program. General or remedial educational activities—such as adult basic education (ABE) or preparation for a high school equivalency or general education diploma (GED)—may be provided only within the context of an individual employability plan for a refugee which is intended to result in job placement in less than one year. Services may continue to be provided as part of a self-sufficiency plan for a refugee after job placement (a) to help the refugee retain employment or (b) to move the refugee to self-sufficiency if the placement has not resulted in sufficient earnings to enable the refugee's cash assistance to terminate. Targeted assistance funds cannot be used for long-term training programs such as vocational training that lasts for more than a year or educational programs that are not intended to lead to employment within a year.

The degree of success of targeted assistance programs will be measured in terms of job placements, job retention, and reductions in cash assistance—the principle objectives of the authorizing legislation.

In order to meet extreme and unusual needs, up to 15% of a local area's allocation may be used for services which are not directed toward the achievement of a specific employment objective in less than one year but which are essential to the adjustment of refugees in the community, provided such needs are clearly demonstrated and such use is approved by the State, or by ORR in the case of State-administered local programs.

Cases in which a county plan contains proposed program activities not allowable under section VII, below, may be entertained by a State only where extreme and unusual need exists and is clearly demonstrated in the county's proposed plan. Such cases will be considered to involve a change in program scope or objectives and will therefore be subject to ORR prior approval.

A State may request a waiver in order to be able to allow a county to use more than 15% for non-employment-related services. ORR will approve such a request only in the most extreme circumstances of need.

The award of funds to States under this notice will be contingent upon the completeness of a State's application as described in section IX, below.

II. Discussion of Comments Received

Five letters of comment were received in response to the notice of proposed availability of FY 1991 funds for refugee targeted assistance. The comments are

summarized below and are followed in each case by the Department's response.

Comment: Two commenters objected to the continued earmarking of targeted assistance funds for Jackson Memorial Hospital and the Dade County public schools in the State of Florida on the grounds that funding of these institutions is inconsistent with the stated intent of the targeted assistance program to provide direct services that result in the economic self-sufficiency of refugees. One commenter objected to the inequity of allocating 50% of the targeted assistance appropriation to the State of Florida when other States are more heavily impacted with large refugee populations. One commenter recommended that the special earmarking cease after FY 1991.

Response: The allocation of funds for Jackson Memorial Hospital and the Dade County public schools reflects Congressional intent expressed in the Conference Report on appropriations.

Comment: One commenter objected to the weight given in the formula to refugees who arrived during fiscal years 1980–1982 and recommended that the weight for this population be reduced from 45% to 25% in determining allocations.

Response: The formula represents a 5% reduction in the weight assigned to the 1980–1982 refugee/entrant arrival cohort, from 50% in the FY 1990 final notice to the current 45%. We expect the weight for this early refugee/entrant population to continue to decrease in succeeding years as the formula is updated to take into account each year's new arrivals.

Comment: One commenter objected to the exclusion of secondary migration as a factor in determining county eligibility for targeted assistance funding.

Response: We agree that the use of secondary migration data would be desirable. Such data are not uniformly collected by all counties and therefore are not used in determining allocations. ORR will consider in FY 1992, however, allowing counties to provide secondary migration data for the purpose of determining the eligibility of new counties to participate in the targeted assistance formula-allocation program. Counties would be required to provide acceptable evidence including refugees' names, alien numbers, and dates of arrival.

Comment: One commenter objected to the use of FY 1989 State welfare dependency data in the allocation formula as an inaccurate measure of current welfare dependency rates, recommending instead that ORR use more recent dependency data. Another commenter complained that too much weight is given to high welfare dependency rates in determining allocations, thereby failing to credit States that have been effective in reducing dependency rates. This commenter recommended reducing the weight value for this factor to 25%.

Response: We recognize that welfare dependency rates may have changed since the end of FY 1989. However, ORR does not have current data of similar scope because data from States have been almost entirely limited to refugee cash assistance (RCA) recipients since FY 1989. In FY 1992, we will consider other options for handling the dependency issue. We believe that the intent of the targeted assistance program is to provide extra assistance to counties that are experiencing the greatest impact from refugee resettlement. We continue to feel that two of the best measures of impact are the number and proportion of refugees in a county who are dependent on publicly funded cash assistance and, to the extent feasible, that targeted assistance funding should continue to be based on these measures of need.

Comment: Two commenters objected to our limiting eligibility for day care funded through targeted assistance to only those refugees who are either participating in TAP employment services or have become employed. Both commenters stated that this limitation would restrict efforts to coordinate TAP-funded services with other local services, such as services funded through refugee social service funds, to the detriment of the refugee.

Response: The provision of day care services to TAP participants, as set forth in our earlier notice, did not represent a change from previous guidelines. The basic intent of TAP has always been to target underserved, difficult-to-place refugees, to identify their barriers to employment, and, by removing those barriers, to enable these refugees to obtain and retain employment. Given this specific purpose of the program, we believe that TAP-funded day care should continue to be for TAP participants. In specific instances, where refugee TAP and social service programs have been merged and are carried out by the same agency, we would be willing to consider a request for a waiver that the administering agency believes would improve the integration and effectiveness of the programs.

Comment: One commenter indicated that while there is merit in allowing TAP clients who have not been able to become self-sufficient to continue in the program, the large numbers of refugee arrivals and the likely reduction in refugee funds argue for placing a priority on services to new arrivals. Another commenter interpreted this language to mean that TAP services could continue to be provided only to refugees who have received TAP employment services.

Response: Our intent is to clarify that it is permissible to provide services beyond job placement to assist refugees to become economically self-sufficient. The State and local administering agencies retain the right and responsibility to prioritize clients and service strategies for their respective communities. Targeted assistance services are available to the specific target populations identified in the local plan and are not limited to refugees who have received TAP employment services before.

Comment: One commenter objected to the limitation on the use of targeted assistance funds for long-term training programs that last for more than a year.

Response: We recognize that long-term training may be desirable for many refugees as they continue to build their lives in this country; however, we believe that such long-term activities are beyond the legislated intent, scope, and funding of the refugee program whose purpose is to help refugees achieve self-sufficiency through employment as quickly as possible.

Comment: One commenter emphasized the need to target refugee women for health education on maternal and child health issues and argued that preventive health activities directed at keeping the family healthy should be regarded as an employment-related service since they enhance the availability of women to enter the work force.

Response: These kinds of activities may be addressed under the 15% extreme and unusual needs TAP funds, or may be competed for separately under the targeted assistance 10% discretionary grant announcement which has a specific health services category.

Comment: One commenter requested clarification on: The differences between project periods, grant periods, and budget periods; definitions of additional or special requirements regarding fiscal and statistical reporting for these various periods; the effect of this new process on rollovers; and a definition of continuation grants and unobligated balances. Clarification was also requested on: (1) Whether future TAP funds appropriated within the 3-year grant period will be awarded under the same grant number; (2) whether States will have to submit separate

Federal fiscal reports by year of appropriation; and (3) whether States will be required to submit separate 6-month and closeout reports for each fiscal year's funds.

Response: Definitions of the terms are as follows: (1) *Project period:* The total time for which a project is approved for support, including any extensions. (2) *Grant period:* The period of time for which funds have been awarded; in incrementally funded projects this means from the beginning date of the project period to the expiration date of the most recently funded budget period. (3) *Budget period:* The interval of time into when a multi-year period of assistance (project period) is divided for budgetary and funding purposes. (4) *Continuation grant:* An award which adds funds to a grant and extends the grant period, to support a budget period after the first budget period. (5) *Unobligated balance:* The portion of total authorized grant funds which is available for obligation by the recipient organization. In general, obligations are transactions during a given period which legally bind the grantee to subsequent payment and for which there would be a penalty for failure to liquidate.

Standard terms and conditions will be attached to each grant award notice issued under this program; these terms and conditions define reporting cycles and requirements. There are no special or additional reporting requirements for grants awarded under this program. With respect to financial reporting, the SF–269 with standard reporting instructions applies. With respect to special requirements for statistical reporting, it is the grant recipient's responsibility to provide programmatic reports with sufficient detail, including statistics when necessary, to identify and define progress towards achieving grant project goals and objectives. We have not defined any specific, nationwide statistical reporting format for this program.

A process of allowing unobligated grant funds from a prior budget period to be carried forward into subsequent budget period will continue for FY 1991 grant awards. As a result of the longer grant periods utilized beginning in FY 1991, the current rollover process will be superseded by procedures more consistent with Department-wide grants management and administration policy. Carryover of unobligated funds within a grant period will be allowed from the budget period for year one to the budget period for year two, and from the budget period for year two to the budget period for year three. Each total budget period funding amount requested must be necessary, reasonable, and allocable to the project. The unobligated balance of the grant at the end of each budget period is retained (carried over) by the grantee into the next budget period, provided a continuation extends the grant period to include that next budget period and justification for the total new year budget request has been accepted. Any unobligated balance of grant funds remaining at the end of the 3-year grant period will be deobligated from the grant award and the total grant reduced by that amount.

TAP funds awarded within the 3-year grant period will be awarded under the same grant number. Fiscal reports are not developed to apply to a year of appropriation. They apply to the entire cumulative budget period(s) in existence at the end of the report period. States are not required to submit separate 6-month and/or closeout reports for each fiscal year funds. One report for each 6-month period and one closeout report per grant are required.

III. Authorization

Targeted assistance projects are funded under the authority of section 412(c)(2) of the Immigration and Nationality Act (INA), as amended by the Refugee Assistance Extension Act of 1986 (Pub. L. 99–605), 8 U.S.C. 1522(c); section 501(a) of the Refugee Education Assistance Act of 1980 (Pub. L. 96–422), 8 U.S.C. 1522 note, insofar as it incorporates by reference with respect to Cuban and Haitian entrants the authorities pertaining to assistance for refugees established by section 412(c)(2) of the INA, as cited above; section 584(c) of the Foreign Operations, Export Financing, and Related Programs Appropriations Act, 1988, as included in the FY 1988 Continuing Resolution (Pub. L. 100–202), insofar as it incorporates by reference with respect to certain Amerasians from Vietnam the authorities pertaining to assistance for refugees established by section 412(c)(2) of the INA, as cited above, including certain Amerasians from Vietnam who are U.S. citizens, as provided under title II of the Foreign Operations, Export Financing, and Related Programs Appropriations Acts, 1989 (Pub. L. 100–461), 1990 (Pub. L. 101–167), and 1991 (Pub. L. 101–513).

IV. Eligible Grantees

The following requirements, which have previously applied to TAP, continue to apply with respect to FY 1991 awards:

Eligible grantees are those agencies of State governments which are responsible for the refugee program under 45 CFR 400.5 in States containing counties which qualify for FY 1991 targeted assistance awards. The use of targeted assistance funds for services to Cuban and Haitian entrants is limited to States which have an approved State plan under the Cuban/Haitian Entrant Program (CHEP).

The State agency will submit a single application on behalf of all county governments of the qualified counties in that State. Subsequent to the approval of the State's application by ORR, local targeted assistance plans will be developed by the county government or other designated entity and submitted to the State.

A State with more than one qualified county is permitted, but not required, to determine the allocation amount for each qualified county within the State. However, if the State chooses to determine county allocations differently from those set forth in this notice, the allocations proposed by the State are subject to ORR approval.

Applications submitted in response to this notice are not subject to review by State and areawide clearinghouses under Executive Order 12372, "Intergovernmental Review of Federal Programs."

V. Qualification and Allocation Formula

The Director of ORR has decided to base the FY 1991 TAP formula allocations on the same formula as in FY 1990 updated to reflect arrivals through September 30, 1990.

Under this formula, one portion of the allocation is based on refugee and Cuban/Haitian entrant arrivals during FY 1980–1982; funds for this portion of the formula are allocated on the same proportionate basis among participating counties as in FY 1990. The second portion of the allocation is based on refugee and entrant placements in these counties during calendar year (CY) 1983–September 30, 1990, and on cash assistance dependency rates. Because of the lack of more recent dependency rate data, the Director has decided to use States' dependency rates as of September 30, 1989.

In determining whether additional counties would be eligible to participate in this targeted assistance formula allocation, the Director has applied the same four criteria used previously, including the same cutoff points, to the updated information on refugee arrivals, concentrations, dependency rates, and receipt of cash assistance. As before, a county would have to meet three out of the four criteria in order to qualify. (For a detailed discussion of these criteria, see the FY 1989 TAP notice published in the **Federal Register** of July 3, 1989,

section V. "Qualification and Allocation Formula," subsection on "Formula Used to Date" (54 FR 27944).) In applying these criteria, ORR has found that no county not currently participating in TAP meets at least three out of the four criteria.

For the participating counties, the $25,373,070 which is allocated by formula is apportioned as follows:

a. $11,417,882, or 45%, is allocated on the basis of the formula which has been used for all previous targeted assistance allocations ("old formula") and which is based on initial placements during FY 1980–1982 and other factors as described under "Formula Used to Date" in the reference cited above.

b. $13,955,188, or 55%, is allocated on the basis of arrivals during CY 1983–September 30, 1990 ("new formula").

The above percentages are based on the proportion of initial placements in these counties during the two periods: 340,737, or 45%, during the old-formula period; and 410,549, or 55%, during the new-formula period.

The old-formula allocation of $11,417,882 follows the same distribution among counties as in the past.

The new-formula allocation of $13,955,188 is based on the number of initial placements in each county during CY 1983–September 30, 1990, multiplied by the State's time-eligible [2] dependency rate as of September 30, 1989. The weighted index resulting from this calculation was used to determine each county's share of the new-formula funds. We continue to believe that, in the absence of additional data, each county's proportionate share of the number of initial placements and the State's time-eligible dependency rate provide good indicators of relative need.[3]

VI. Allocations

Table 1 lists the participating counties, the amount of each county's allocation which is based on the old formula, the number of placements in each county during CY 1983—September 30, 1990, the State's dependency rate as of September 30, 1989, the amount of each county's allocation which is based on the new formula, and the county's total allocation.

Although Table 1 shows an amount for each county, the Director has decided, in the case of a State which contains more than one qualified county, to continue to permit the State to determine (in accordance with the requirements set forth in this notice) the appropriate allocation of the State's targeted assistance award among the qualified counties in the State. The Director sees this as continuing ORR's practice of providing as much authority and flexibility as possible to States in determining the relative needs of the qualified counties within a State. Thus each such State, as in the FY 1990 TAP, is responsible for determining an appropriate and equitable basis for allocating the funds among the qualified counties in the State and for including in its application for approval by ORR a description of this allocation basis, the data to be used, and the allocation proposed for each county.

Table 2 provides State totals for the proposed county allocations set forth in Table 1.

[2] The term "time-eligible" means refugees in their first 24 months in the U.S., the time-period for which States could claim cash and medical assistance costs against ORR's grants to the States as of the end of FY 1989. "Time-expired" refers to refugees who have been in the U.S. more than 24 months.

[3] More specific data might include the estimated county populations of refugees who arrived during CY 1983–FY 1990 and actual numbers of time-expired refugees who are receiving cash assistance. However, it is not possible to estimate county refugee populations reliably because of lack of county-level information on secondary migration. Data are not universally available on the receipt of cash assistance by time-expired refugees.

TABLE 1.—TARGETED ASSISTANCE ALLOCATIONS BY COUNTY: FY 1991

	County and State	Arrivals Jan. 1983-Sept. 1990 (A)	Percent receiving assistance (9/30/89) (B)	Portion of FY 1991 allocation under old formula (C)	Portion of FY 1991 allocation under new formula (D)	Total FY 1991 allocation[1] (E)
1	Alameda, CA	10,339	80.1	$287.447	$533,581	$821,028
2	Contra Costa, CA	2,865	80.1	82,188	147,858	230,046
3	Fresno, CA	8,231	80.1	158,728	424,790	583,518
4	Los Angeles, CA	69,507	80.1	1,451,568	3,587,155	5,038,723
5	Merced, CA	2,734	80.1	193,741	141,098	334,839
6	Orange, CA	23,162	80.1	645,902	1,195,357	1,841,259
7	Sacramento, CA	7,545	80.1	246,026	389,386	635,412
8	San Diego, CA	14,2	80.1	481,410	733,873	1,215,283
9	San Francisco, CA	15,219	80.1	373,593	785,430	1,159,023
10	San Joaquin, CA	6,699	80.1	248,255	345,726	593,981
11	Santa Clara, CA	19,046	80.1	480,833	982,936	1,463,769
12	Stanislaus, CA	2,349	80.1	44,917	121,228	166,145
13	Denver, CO	4,715	38.0	94,835	112,896	7,731
14	Broward, FL	923	18.5	157,088	10,759	167,847
15	Dade, FL	28,741	18.5	2,740,511	335,033	[1] 21,617,403
16	Hillsboro, FL	1,658	18.5	49,367	19,327	68,694
17	Palm Beach, FL	607	18.5	65,258	7,076	72,334
18	Honolulu, HI	2,229	67.7	104,428	95,085	199,513
19	Cook/Kane, IL	,686	19.5	490,543	254,171	744,714
20	Sedgwick, KS	2,705	24.9	116,895	42,441	159,336
21	Orleans, LA	2,794	7.2	79,856	12,676	92,532
22	Montgomery/Prince Georges, MD	5,026	18.0	97,149	57,004	154,153
23	Middlesex, MA	4,029	60.3	76,745	153,084	229,829
24	Suffolk, MA	10,585	60.3	176,135	402,182	578,317
25	Hennepin, MN	6,222	75.4	123,744	295,608	419,352
26	Ramsey, MN	6,174	75.4	173,991	293,327	467,318
27	Jackson, MO	1,648	16.9	45,427	17,549	62,976

TABLE 1.—TARGETED ASSISTANCE ALLOCATIONS BY COUNTY: FY 1991—Continued

County and State	Arrivals Jan. 1983-Sept. 1990 (A)	Percent receiving assistance (9/30/89) (B)	Portion of FY 1991 allocation under old formula (C)	Portion of FY 1991 allocation under new formula (D)	Total FY 1991 allocation[1] (E)
28 Essex, NJ	4,025	18.8	26,289	47,680	73,969
29 Hudson, NJ	1,346	18.8	175,913	15,945	191,858
30 Union, NJ	791	18.8	35,314	9,370	44,684
31 New York, NY	58,899	25.1	392,493	931,528	1,324,021
32 Multinomah, OR	8,1	49.2	266,667	251,730	518,397
33 Philadelphia, PA	11,070	39.7	182,534	276,919	459,453
34 Providence, RI	3,578	43.1	130,375	97,170	227,545
35 Harris, TX	12,491	18.3	213,962	144,033	357,995
36 Salt Lake, UT	4,968	22.3	65,044	69,807	134,851
37 Arlington, VA	1,935	.4	112,717	24,873	137,590
38 Fairfax, VA	4,948	.4	135,915	63,602	199,517
39 King/Snohomish, WA	14,990	47.1	324,690	444,874	769,564
40 Pierce, WA	2,730	47.1	69,389	81,021	150,410
Total	410,549	48.5	11,417,882	13,955,188	43,914,929

[1] The allocation for Dade County, Florida, includes $18,541,859 for Jackson Memorial Hospital (Miami) and the Dade County (Miami) public schools, the same amount as in FY 1990, less the 2.41% reduction applied to the FY 1991 HHS appropriation and the 0.0013% across-the-board sequestration. This is referred to in the Conference Report on the appropriation "to continue the current program of support to communities affected as a result of the massive influx of Cuban and Haitian entrants during the Mariel boatlift." The amounts are $10,379,904 for Jackson Memorial and $8,161,955 for the Dade County schools.

In accordance with the Conference Report, California has been held harmless in the formula allocation, accounting for approximately 28.86% of the funds awarded in both FY 1990 and FY 1991.

TABLE 2.—TARGETED ASSISTANCE ALLOCATIONS BY STATE: FY 1991

State	FY 1991 allocation
California	$14,083,026
Colorado	207,731
Florida	[1] 21,926,278
Hawaii	199,513
Illinois	744,714
Kansas	159,336
Louisiana	92,532
Maryland	154,153
Massachusetts	808,146
Minnesota	886,670
Missouri	62,976
New Jersey	310,511
New York	1,324,021
Oregon	518,397
Pennsylvania	459,453
Rhode Island	227,545
Texas	357,995
Utah	134,851
Virginia	337,107
Washington	919,974
Total	43,914,929

[1] The allocation for Florida includes $18,541,859 for Jackson Memorial Hospital (Miami) and the Dade County (Miami) public schools. See footnote to Table 1.

VII. Allowable Activities and Client Prioritization

At least 85% of a county's FY 1991 targeted assistance funds must be used to support activities permissible under section 412(c) of the INA which have specific employment objectives and are directly related to aiding refugees in finding and retaining jobs within less than one year's participation in the targeted assistance program. Examples of these activities are: Job development; job placement; job-related and vocational English; short-term job training specifically related to opportunities in the local economy; on-the-job training; business and employer incentives (such as on-site employee orientation, vocational English training, or bilingual supervisor assistance); and business technical assistance. These funds may be used for general or remedial education services—such as adult basic education (ABE) or preparation for a high school equivalency or general education diploma (GED)—only if such service is provided within the context of an individual employability plan for a refugee which is intended to result in job placement within less than one year. Services may continue to be provided as part of a self-sufficiency plan for a refugee after job placement (a) to help the refugee retain employment or (b) to move the refugee to self-sufficiency if the placement has not resulted in sufficient earnings to enable the refugee's cash assistance to terminate. Targeted assistance funds cannot be used for long-term training programs such as vocational training that lasts for more than a year or educational programs that are not intended to lead to employment within a year.

The Director of ORR expects States to "insure that women have the same opportunities as men to participate in training and instruction." In addition, States are expected to make sure that services are provided in a manner that encourages the use of bilingual women on service agency staffs to ensure adequate service access by refugee women.

In order to facilitate refugee self-support, the Director also strongly encourages States to implement strategies which address simultaneously the employment potential of both male and female wage earners, particularly in the case of large families. States are encouraged to treat day care services as a priority employment-related service in order to allow women with children the opportunity to participate in employment services or to accept or retain employment. To be eligible for day care funded through targeted assistance, a refugee must be participating in TAP employment services or have accepted employment. For an employed refugee, TAP-funded day care will be limited to 6 months after the refugee becomes employed.

Up to 15% of a local area's allocation may be used for other services which are permissible under section 412(c) of the INA and which are identified and demonstrated in the county plan to be essential services in addressing extreme and unusual needs of the refugee population in the targeted assistance area even though they do not have the specific objective of job placement within less than one year. Subject to State review and approval, a maximum of 15% of the allocation amount for each area may be used in funding these services.

In the event that a State might wish to grant a local area's request to allocate

more than 15% of its funds for such non-employment-related services, the State is required to obtain formal prior approval by the Director of ORR. Only the most extreme needs will be considered adequate justification for a local area to use more than 15% of its TAP funds for these services. In order to justify the provision of services for extreme and unusual needs, a county plan must identify the target population, demonstrate clearly the nature and extent of the needs, and describe how the use of more than 15% of its targeted assistance funds to address such needs would contribute to the adjustment of the refugee population.

Services funded under TAP are required to focus primarily on those refugees who, either because of their considerable and protracted use of public assistance or continued difficulty in securing employment, constitute a major resettlement problem for the affected jurisdiction which cannot be addressed without additional services. In order to ensure sufficient emphasis on services to appropriate clients, each State is required to provide an assurance in its application to ORR that, for each qualified local area, cash assistance recipients (time-eligible and time-expired recipients under any program of the State or locality) will make up a percentage of the FY 1991 targeted assistance clientele which is not less than the State's final FY 1989 dependency rate as determined by ORR.

This client prioritization requirement does not apply to the 15% funds described above.

VIII. Application and Implementation Process

Under the FY 1991 targeted assistance program, as in FY 1990, States may apply for and receive grant awards on behalf of qualified counties in the State. A single allocation will be made to each State by ORR on the basis of an approved State application. The State agency will, in turn, receive, review, and determine the acceptability of individual county targeted assistance plans.

TAP is a multi-year program, with grant project periods issued for periods of 3 years and grant funding generally limited to 12-month budgets within the grant project period. In the event that targeted assistance funds are appropriated in future years, additional 12-month budget period applications will be considered as noncompetitive continuation grant applications so long as they are within the total grant project period.

Although funding for educational services in Dade County, FL, and for medical services at Jackson Memorial Hospital in Miami, FL, is part of the appropriation amount for targeted assistance, the scope of activities for these special projects will be administratively determined. Applications for those funds are therefore not subject to provisions contained in this notice but to other requirements which have been conveyed separately. Similarly, the requirements regarding the 10% of the targeted assistance appropriation that will be awarded separately are addressed in the grant announcement for those funds.

IX. Application Requirements

The State application requirements for grants for the FY 1991 targeted assistance formula allocation are as follows:

States that are currently operating under approved management plans for their FY 1990 targeted assistance program and wish to continue to do so for their FY 1991 grants may provide the following in lieu of resubmitting the full currently approved plan:

The State's application shall provide:

A. Assurance that the State's current management plan for the administration of the targeted assistance program, as approved by ORR, will continue to be in full force and effect for the FY 1991 targeted assistance program, subject to any additional assurances or revisions required by this notice which are not reflected in the current plan. Any proposed modifications to the approved plan will be described separately in the application and are subject to ORR review and approval.

B. Timetables for awarding funds to the local areas consistent with the conclusion of services under the FY 1990 program as modified by no-cost extensions of prior-year targeted assistance funds and service periods, including budgets with an estimated carryover of unobligated balances from the prior-year budget period. New budget periods are to be for 12 months; however, budget periods greater than 12 months but less than 18 months will be considered if adequately justified.

C. A line item budget and justification for State administrative costs limited to a maximum of 5% of the total award to the State.

D. Revised information and description of any proposed plan modifications. Any proposed changes must address and reference all appropriate portions of the FY 1990 application content requirements to ensure complete incorporation in the State's management plan.

E. If an unobligated balance is available from a prior year, a State must indicate at the time of application how any proposed carryover of unobligated funds will be used. If this information is not available when the application is submitted, the State must submit a supplement to the application explaining how the unobligated funds will be used to expand the program. The proposed budget must also be adjusted accordingly.

F. *This paragraph applies only to States administering the program locally:* States that have administered the program locally or provide direct service to the refugee population (with the concurrence of the county) must submit a program summary to ORR for prior review and approval. The summary must include a description of the proposed services; a justification for the projected allocation for each component including relationship of funds allocated to numbers of clients served, characteristics of clients, duration of training and services, projected outcomes, and cost per placement. In addition, the program component summary should describe any ancillary services or subcomponents such as day care, transportation, or language training.

G. *This paragraph applies only to States with two or more counties receiving targeted assistance funds:* As in FY 1990, a State with two or more local areas which qualify for the program may choose to determine respective county allocations. If the State chooses to determine county allocations differently from those set forth in Table 1 of this notice, the State should provide a description of the State's proposed allocation plan. The allocation approach should be based upon existing FY 1990 funds, prior-year funds carried forward, and indicators of refugee need for targeted assistance services. The application should contain a description of the allocation approach, data used in its determination, and the calculated allocation amount for each county. States are encouraged to revise allocation formulas to assure appropriate funding among eligible counties for the duration of the grant such that targeted assistance activities within the State conclude simultaneously. The allocation formula is subject to ORR approval. If the State chooses not to determine county allocation amounts, the State must provide the allocations which are specified in this notice.

H. Assurance that, for each qualified local area, cash assistance recipients (time-eligible or time-expired recipients under any program of the State or locality) will make up a percentage of

the FY 1991 targeted assistance clientele no less than the State's final FY 1989 dependency rate, as determined by ORR, unless a waiver of this requirement is granted by ORR.

I. Assurance that at least 85% of targeted assistance funds will support projects which directly enhance refugee employment potential, have specific employment objectives, and are designed to enable refugees to obtain jobs with less than one year's participation in the targeted assistance program.

J. The following certifications: Drug-Free Workplace, Debarment, and Anti-Lobbying.

X. Review, Technical Assistance, and Award Policy

Applications will be considered on a non-competitive basis. They will be reviewed and approved in accordance with the criteria set forth in this announcement. Continuation awards will be considered based on the receipt of the required program and financial reports and ORR's determination that continued funding is in the best interest of the Government. The Department will provide technical assistance to the applicant if it is necessary in order to develop a proposal which warrants the award of funds at the proposed allocation amount and if such assistance is requested by the applying State agency. Final determination as to the acceptability of applications is at the discretion of the Director of ORR.

XI. Reporting Requirements

FY 1991 TAP grants must be tracked separately from previous TAP grants, both financially and programmatically. For the FY 1991 program, States are required to submit semiannual reports and one final report as in previous years on the services provided in each targeted area. States are required to report on the number of job placements and retentions, cash assistance recipients placed on jobs, costs per placement, and other items specified in the "Reporting Requirements for Targeted Assistance Grants for Services for Refugees in Local Areas of High Need," OMB No. 0970–0042, expiration date February 28, 1991. Semiannual reports covering activity through September 30 and March 31 of each year are due on October 31 and April 30 of each year. A final cumulative report is due 90 days after the end of the full grant period.

Dated: August 26, 1991.

Chris Gersten,

Director, Office of Refugee Resettlement.

Attachment A—DHHS Regulations Applicable to All Applicants/Grantees

The following DHHS regulations apply to all applicants/grantees.

Title 45 of the Code of Federal Regulations:

Part 16—Departmental Procedures of the Grant Appeals Board
Part 74—Administration of Grants (non-governmental)
Part 74—Administration of Grants (state and local governments and Indian Tribal affiliates):
Sections 74.62 (a) Non-Federal Audits
74.173 Hospitals
74.174 (b) Other Nonprofit Organizations
74.304 Final Decisions in Disputes
74.710 Real Property, Equipment and Supplies
74.715 General Program Income
Part 75—Informal Grant Appeals Procedures
Part 76—Debarment and Suspension from Eligibility for Financial Assistance
Subpart F—Drug Free Workplace Requirements
Part 80—Nondiscrimination Under Programs Receiving Federal Assistance through the Department of Health and Human Services Effectuation of Title VI of the Civil Rights Act of 1964
Part 81—Practice and Procedures for Hearings Under Part 80 of this Title
Part 83—Nondiscrimination on the Basis of Sex in the Admission of Individuals to Training Programs
Part 84—Nondiscrimination on the Basis of Handicap in Programs
Part 91—Nondiscrimination on the Basis of Age in Health and Human Services Programs or Activities Receiving Federal Financial Assistance
Part 92—Uniform Administrative Requirements for Grants and Cooperative Agreements to States and Local Governments
Part 100—Intergovernmental Review of Department of Health and Human Services Programs and Activities.

BILLING CODE 4150-04-M

ATTACHMENT B—SF 424, APPLICATION FOR FEDERAL ASSISTANCE AND INSTRUCTIONS FOR THE SF–424

OMB Approval No. 0348-0043

APPLICATION FOR FEDERAL ASSISTANCE

1. TYPE OF SUBMISSION: *Application* ☐ Construction ☐ Non-Construction; *Preapplication* ☐ Construction ☐ Non-Construction	2. DATE SUBMITTED	Applicant Identifier
	3. DATE RECEIVED BY STATE	State Application Identifier
	4. DATE RECEIVED BY FEDERAL AGENCY	Federal Identifier

5. APPLICANT INFORMATION

Legal Name	Organizational Unit
Address *(give city, county, state, and zip code)*	Name and telephone number of the person to be contacted on matters involving this application *(give area code)*

6. EMPLOYER IDENTIFICATION NUMBER (EIN): ☐☐ – ☐☐☐☐☐☐☐

7. TYPE OF APPLICANT: *(enter appropriate letter in box)* ☐

A State
B County
C Municipal
D Township
E Interstate
F Intermunicipal
G Special District
H Independent School Dist
I State Controlled Institution of Higher Learning
J Private University
K Indian Tribe
L Individual
M Profit Organization
N Other (Specify) _____

8. TYPE OF APPLICATION:

☐ New ☐ Continuation ☐ Revision

If Revision, enter appropriate letter(s) in box(es): ☐ ☐

A Increase Award B Decrease Award C Increase Duration
D Decrease Duration Other *(specify)*: _____

9. NAME OF FEDERAL AGENCY

10. CATALOG OF FEDERAL DOMESTIC ASSISTANCE NUMBER: ☐☐ . ☐☐☐

TITLE

11. DESCRIPTIVE TITLE OF APPLICANT'S PROJECT

12. AREAS AFFECTED BY PROJECT *(cities, counties, states, etc.)*

13. PROPOSED PROJECT: Start Date	Ending Date	14. CONGRESSIONAL DISTRICTS OF: a. Applicant	b. Project

15. ESTIMATED FUNDING:	
a. Federal	$ .00
b. Applicant	$ .00
c. State	$ .00
d. Local	$ .00
e. Other	$ .00
f. Program Income	$ .00
g. TOTAL	$ .00

16. IS APPLICATION SUBJECT TO REVIEW BY STATE EXECUTIVE ORDER 12372 PROCESS?

a. YES THIS PREAPPLICATION/APPLICATION WAS MADE AVAILABLE TO THE STATE EXECUTIVE ORDER 12372 PROCESS FOR REVIEW ON

DATE _____

b. NO ☐ PROGRAM IS NOT COVERED BY E.O. 12372

☐ OR PROGRAM HAS NOT BEEN SELECTED BY STATE FOR REVIEW

17. IS THE APPLICANT DELINQUENT ON ANY FEDERAL DEBT?

☐ Yes If "Yes," attach an explanation ☐ No

18. TO THE BEST OF MY KNOWLEDGE AND BELIEF, ALL DATA IN THIS APPLICATION/PREAPPLICATION ARE TRUE AND CORRECT, THE DOCUMENT HAS BEEN DULY AUTHORIZED BY THE GOVERNING BODY OF THE APPLICANT AND THE APPLICANT WILL COMPLY WITH THE ATTACHED ASSURANCES IF THE ASSISTANCE IS AWARDED

a. Typed Name of Authorized Representative	b. Title	c. Telephone number
d. Signature of Authorized Representative		e. Date Signed

Previous Editions Not Usable

Standard Form 424 (REV 4-88)
Prescribed by OMB Circular A-102

Authorized for Local Reproduction

INSTRUCTIONS FOR THE SF 424

This is a standard form used by applicants as a required facesheet for preapplications and applications submitted for Federal assistance. It will be used by Federal agencies to obtain applicant certification that States which have established a review and comment procedure in response to Executive Order 12372 and have selected the program to be included in their process, have been given an opportunity to review the applicant's submission.

Item: Entry:

1. Self-explanatory.

2. Date application submitted to Federal agency (or State if applicable) & applicant's control number (if applicable).

3. State use only (if applicable).

4. If this application is to continue or revise an existing award, enter present Federal identifier number. If for a new project, leave blank.

5. Legal name of applicant, name of primary organizational unit which will undertake the assistance activity, complete address of the applicant, and name and telephone number of the person to contact on matters related to this application.

6. Enter Employer Identification Number (EIN) as assigned by the Internal Revenue Service.

7. Enter the appropriate letter in the space provided.

8. Check appropriate box and enter appropriate letter(s) in the space(s) provided:
   - "New" means a new assistance award.
   - "Continuation" means an extension for an additional funding/budget period for a project with a projected completion date.
   - "Revision" means any change in the Federal Government's financial obligation or contingent liability from an existing obligation.

9. Name of Federal agency from which assistance is being requested with this application.

10. Use the Catalog of Federal Domestic Assistance number and title of the program under which assistance is requested.

11. Enter a brief descriptive title of the project. if more than one program is involved, you should append an explanation on a separate sheet. If appropriate (e.g., construction or real property projects), attach a map showing project location. For preapplications, use a separate sheet to provide a summary description of this project.

Item: Entry:

12. List only the largest political entities affected (e.g., State, counties, cities).

13. Self-explanatory.

14. List the applicant's Congressional District and any District(s) affected by the program or project.

15. Amount requested or to be contributed during the first funding/budget period by each contributor. Value of in-kind contributions should be included on appropriate lines as applicable. If the action will result in a dollar change to an existing award, indicate *only* the amount of the change. For decreases, enclose the amounts in parentheses. If both basic and supplemental amounts are included, show breakdown on an attached sheet. For multiple program funding, use totals and show breakdown using same categories as item 15.

16. Applicants should contact the State Single Point of Contact (SPOC) for Federal Executive Order 12372 to determine whether the application is subject to the State intergovernmental review process.

17. This question applies to the applicant organization, not the person who signs as the authorized representative. Categories of debt include delinquent audit disallowances, loans and taxes.

18. To be signed by the authorized representative of the applicant. A copy of the governing body's authorization for you to sign this application as official representative must be on file in the applicant's office. (Certain Federal agencies may require that this authorization be submitted as part of the application.)

Attachment C—SF 424A, Budget Information—Non-Construction Programs and Instructions for the SF 424A

OMB Approval No. 0348-0044

BUDGET INFORMATION — Non-Construction Programs

SECTION A – BUDGET SUMMARY

Grant Program Function or Activity (a)	Catalog of Federal Domestic Assistance Number (b)	Estimated Unobligated Funds		New or Revised Budget		
		Federal (c)	Non-Federal (d)	Federal (e)	Non-Federal (f)	Total (g)
1.		$	$	$	$	$
2.						
3.						
4.						
5. TOTALS		$	$	$	$	$

SECTION B – BUDGET CATEGORIES

6 Object Class Categories	GRANT PROGRAM, FUNCTION OR ACTIVITY				Total (5)
	(1)	(2)	(3)	(4)	
a. Personnel	$	$	$	$	$
b. Fringe Benefits					
c. Travel					
d. Equipment					
e. Supplies					
f. Contractual					
g. Construction					
h. Other					
i. Total Direct Charges (sum of 6a - 6h)					
j. Indirect Charges					
k. TOTALS (sum of 6i and 6j)	$	$	$	$	$
7. Program Income	$	$	$	$	$

Authorized for Local Reproduction

Standard Form 424A (4-88)
Prescribed by OMB Circular A-102

SECTION C - NON-FEDERAL RESOURCES

(a) Grant Program	(b) Applicant	(c) State	(d) Other Sources	(e) TOTALS
8.	$	$	$	$
9.				
10.				
11.				
12. TOTALS (sum of lines 8 and 11)	$	$	$	$

SECTION D - FORECASTED CASH NEEDS

	Total for 1st Year	1st Quarter	2nd Quarter	3rd Quarter	4th Quarter
13. Federal	$	$	$	$	$
14. NonFederal					
15. TOTAL (sum of lines 13 and 14)	$	$	$	$	$

SECTION E - BUDGET ESTIMATES OF FEDERAL FUNDS NEEDED FOR BALANCE OF THE PROJECT

(a) Grant Program	FUTURE FUNDING PERIODS (Years)			
	(b) First	(c) Second	(d) Third	(e) Fourth
16.	$	$	$	$
17.				
18.				
19.				
20. TOTALS (sum of lines 16 -19)	$	$	$	$

SECTION F - OTHER BUDGET INFORMATION

(Attach additional Sheets if Necessary)

21. Direct Charges:	22. Indirect Charges:

23. Remarks

SF 424A (4-88) Page 2
Prescribed by OMB Circular A-102

Authorized for Local Reproduction

INSTRUCTIONS FOR THE SF-424A

General Instructions

This form is designed so that application can be made for funds from one or more grant programs. In preparing the budget, adhere to any existing Federal grantor agency guidelines which prescribe how and whether budgeted amounts should be separately shown for different functions or activities within the program. For some programs, grantor agencies may require budgets to be separately shown by function or activity. For other programs, grantor agencies may require a breakdown by function or activity. Sections A,B,C, and D should include budget estimates for the whole project except when applying for assistance which requires Federal authorization in annual or other funding period increments. In the latter case, Sections A,B, C, and D should provide the budget for the first budget period (usually a year) and Section E should present the need for Federal assistance in the subsequent budget periods. All applications should contain a breakdown by the object class categories shown in Lines a-k of Section B.

Section A. Budget Summary
Lines 1-4, Columns (a) and (b)

For applications pertaining to a *single* Federal grant program (Federal Domestic Assistance Catalog number) and *not requiring* a functional or activity breakdown, enter on Line 1 under Column (a) the catalog program title and the catalog number in Column (b).

For applications pertaining to a *single* program *requiring* budget amounts by multiple functions or activities, enter the name of each activity or function on each line in Column (a), and enter the catalog number in Column (b). For applications pertaining to multiple programs where none of the programs require a breakdown by function or activity, enter the catalog program title on each line in *Column* (a) and the respective catalog number on each line in Column (b).

For applications pertaining to *multiple* programs where one or more programs *require* a breakdown by function or activity, prepare a separate sheet for each program requiring the breakdown. Additional sheets should be used when one form does not provide adequate space for all breakdown of data required. However, when more than one sheet is used, the first page should provide the summary totals by programs.

Lines 1-4, Columns (c) through (g.)

For new applications, leave Columns (c) and (d) blank. For each line entry in Columns (a) and (b), enter in Columns (e), (f), and (g) the appropriate amounts of funds needed to support the project for the first funding period (usually a year).

Lines 1-4, Columns (c) through (g.) (continued)

For continuing grant program applications, submit these forms before the end of each funding period as required by the grantor agency. Enter in Columns (c) and (d) the estimated amounts of funds which will remain unobligated at the end of the grant funding period only if the Federal grantor agency instructions provide for this. Otherwise, leave these columns blank. Enter in columns (e) and (f) the amounts of funds needed for the upcoming period. The amount(s) in Column (g) should be the sum of amounts in Columns (e) and (f).

For supplemental grants and changes to existing grants, do not use Columns (c) and (d). Enter in Column (e) the amount of the increase or decrease of Federal funds and enter in Column (f) the amount of the increase or decrease of non-Federal funds. In Column (g) enter the new total budgeted amount (Federal and non-Federal) which includes the total previous authorized budgeted amounts plus or minus, as appropriate, the amounts shown in Columns (e) and (f). The amount(s) in Column (g) should not equal the sum of amounts in Columns (e) and (f).

Line 5 — Show the totals for all columns used.

Section B Budget Categories

In the column headings (1) through (4), enter the titles of the same programs, functions, and activities shown on Lines 1-4, Column (a), Section A. When additional sheets are prepared for Section A, provide similar column headings on each sheet. For each program, function or activity, fill in the total requirements for funds (both Federal and non-Federal) by object class categories.

Lines 6a-i — Show the totals of Lines 6a to 6h in each column.

Line 6j – Show the amount of indirect cost.

Line 6k – Enter the total of amounts on Lines 6i and 6j. For all applications for new grants and continuation grants the total amount in column (5), Line 6k, should be the same as the total amount shown in Section A, Column (g), Line 5. For supplemental grants and changes to grants, the total amount of the increase or decrease as shown in Columns (1)-(4), Line 6k should be the same as the sum of the amounts in Section A, Columns (e) and (f) on Line 5.

INSTRUCTIONS FOR THE SF-424A *(continued)*

Line 7 – Enter the estimated amount of income, if any, expected to be generated from this project. Do not add or subtract this amount from the total project amount. Show under the program narrative statement the nature and source of income. The estimated amount of program income may be considered by the federal grantor agency in determining the total amount of the grant.

Section C. Non-Federal-Resources

Lines 8-11 – Enter amounts of non-Federal resources that will be used on the grant. If in-kind contributions are included, provide a brief explanation on a separate sheet.

Column (a) – Enter the program titles identical to Column (a), Section A A breakdown by function or activity is not necessary

Column (b) – Enter the contribution to be made by the applicant.

Column (c) – Enter the amount of the State's cash and in-kind contribution if the applicant is not a State or State agency. Applicants which are a State or State agencies should leave this column blank.

Column (d) – Enter the amount of cash and in-kind contributions to be made from all other sources.

Column (e) – Enter totals of Columns (b), (c), and (d).

Line 12 — Enter the total for each of Columns (b)-(e). The amount in Column (e) should be equal to the amount on Line 5, Column (f), Section A.

Section D. Forecasted Cash Needs

Line 13 – Enter the amount of cash needed by quarter from the grantor agency during the first year.

Line 14 – Enter the amount of cash from all other sources needed by quarter during the first year

Line 15 – Enter the totals of amounts on Lines 13 and 14.

Section E. Budget Estimates of Federal Funds Needed for Balance of the Project

Lines 16 - 19 – Enter in Column (a) the same grant program titles shown in Column (a), Section A A breakdown by function or activity is not necessary For new applications and continuation grant applications, enter in the proper columns amounts of Federal funds which will be needed to complete the program or project over the succeeding funding periods (usually in years) This section need not be completed for revisions (amendments, changes, or supplements) to funds for the current year of existing grants

If more than four lines are needed to list the program titles, submit additional schedules as necessary

Line 20 – Enter the total for each of the Columns (b)-(e) When additional schedules are prepared for this Section, annotate accordingly and show the overall totals on this line

Section F. Other Budget Information

Line 21 – Use this space to explain amounts for individual direct object-class cost categories that may appear to be out of the ordinary or to explain the details as required by the Federal grantor agency

Line 22 – Enter the type of indirect rate (provisional, predetermined, final or fixed) that will be in effect during the funding period, the estimated amount of the base to which the rate is applied, and the total indirect expense

Line 23 – Provide any other explanations or comments deemed necessary.

ATTACHMENT D—SF 424B, ASSURANCES—NON-CONSTRUCTION PROGRAMS

OMB Approval No. 0348-0040

ASSURANCES — NON-CONSTRUCTION PROGRAMS

Note: Certain of these assurances may not be applicable to your project or program. If you have questions, please contact the awarding agency. Further, certain Federal awarding agencies may require applicants to certify to additional assurances. If such is the case, you will be notified.

As the duly authorized representative of the applicant I certify that the applicant:

1. Has the legal authority to apply for Federal assistance, and the institutional, managerial and financial capability (including funds sufficient to pay the non-Federal share of project costs) to ensure proper planning, management and completion of the project described in this application.

2. Will give the awarding agency, the Comptroller General of the United States, and if appropriate, the State, through any authorized representative, access to and the right to examine all records, books, papers, or documents related to the award; and will establish a proper accounting system in accordance with generally accepted accounting standards or agency directives.

3. Will establish safeguards to prohibit employees from using their positions for a purpose that constitutes or presents the appearance of personal or organizational conflict of interest, or personal gain.

4. Will initiate and complete the work within the applicable time frame after receipt of approval of the awarding agency.

5. Will comply with the Intergovernmental Personnel Act of 1970 (42 U.S.C. §§ 4728-4763) relating to prescribed standards for merit systems for programs funded under one of the nineteen statutes or regulations specified in Appendix A of OPM's Standards for a Merit System of Personnel Administration (5 C.F.R. 900, Subpart F).

6. Will comply with all Federal statutes relating to nondiscrimination. These include but are not limited to: (a) Title VI of the Civil Rights Act of 1964 (P.L. 88-352) which prohibits discrimination on the basis of race, color or national origin; (b) Title IX of the Education Amendments of 1972, as amended (20 U.S.C. §§ 1681-1683, and 1685-1686), which prohibits discrimination on the basis of sex; (c) Section 504 of the Rehabilitation Act of 1973, as amended (29 U.S.C. § 794), which prohibits discrimination on the basis of handicaps; (d) the Age Discrimination Act of 1975, as amended (42 U.S.C.§§ 6101-6107), which prohibits discrimination on the basis of age; (e) the Drug Abuse Office and Treatment Act of 1972 (P.L. 92-255), as amended, relating to nondiscrimination on the basis of drug abuse, (f) the Comprehensive Alcohol Abuse and Alcoholism Prevention, Treatment and Rehabilitation Act of 1970 (P.L. 91-616), as amended, relating to nondiscrimination on the basis of alcohol abuse or alcoholism; (g) §§ 523 and 527 of the Public Health Service Act of 1912 (42 U.S.C. 290 dd-3 and 290 ee-3), as amended, relating to confidentiality of alcohol and drug abuse patient records; (h) Title VIII of the Civil Rights Act of 1968 (42 U.S.C. § 3601 et seq.), as amended, relating to nondiscrimination in the sale, rental or financing of housing; (i) any other nondiscrimination provisions in the specific statute(s) under which application for Federal assistance is being made; and (j) the requirements of any other nondiscrimination statute(s) which may apply to the application.

7. Will comply, or has already complied, with the requirements of Titles II and III of the Uniform Relocation Assistance and Real Property Acquisition Policies Act of 1970 (P.L. 91-646) which provide for fair and equitable treatment of persons displaced or whose property is acquired as a result of Federal or federally assisted programs. These requirements apply to all interests in real property acquired for project purposes regardless of Federal participation in purchases.

8. Will comply with the provisions of the Hatch Act (5 U.S.C. §§ 1501-1508 and 7324-7328) which limit the political activities of employees whose principal employment activities are funded in whole or in part with Federal funds.

9. Will comply, as applicable, with the provisions of the Davis-Bacon Act (40 U.S.C. §§ 276a to 276a-7), the Copeland Act (40 U.S.C. § 276c and 18 U.S.C. §§ 874), and the Contract Work Hours and Safety Standards Act (40 U.S.C. §§ 327-333), regarding labor standards for federally assisted construction subagreements.

Standard Form 424B (4-88)
Prescribed by OMB Circular A-102

Authorized for Local Reproduction

10. Will comply, if applicable, with flood insurance purchase requirements of Section 102(a) of the Flood Disaster Protection Act of 1973 (P.L. 93-234) which requires recipients in a special flood hazard area to participate in the program andto purchase flood insurance if the total cost of insurable construction and acquisition is $10,000 or more.

11. Will comply with environmental standards which may be prescribed pursuant to the following: (a) institution of environmental quality control measures under the National Environmental Policy Act of 1969 (P.L. 91-190) and Executive Order (EO) 11514; (b) notification of violating facilities pursuant to EO 11738; (c) protection of wetlands pursuant to EO 11990; (d) evaluation of flood hazards in floodplains in accordance with EO 11988, (e) assurance of project consistency with the approved State management program developed under the Coastal Zone Management Act of 1972 (16 U.S.C. §§ 1451 et seq.); (f) conformity of Federal actions to State (Clear Air) Implementation Plans under Section 176(c) of the Clear Air Act of 1955, as amended (42 U.S.C. § 7401 et seq.); (g) protection of underground sources of drinking water under the Safe Drinking Water Act of 1974, as amended, (P.L. 93-523); and (h) protection of endangered species under the Endangered Species Act of 1973, as amended, (P.L. 93-205).

12. Will comply with the Wild and Scenic Rivers Act of 1968 (16 U.S.C. §§ 1271 et seq.) related to protecting components or potential components of the national wild and scenic rivers system.

13. Will assist the awarding agency in assuring compliance with Section 106 of the National Historic Preservation Act of 1966, as amended (16 U.S.C. 470), EO 11593 (identification and protection of historic properties), and the Archaeological and Historic Preservation Act of 1974 (16 U.S.C. 469a-1 et seq.).

14. Will comply with P.L. 93-348 regarding the protection of human subjects involved in research, development, and related activities supported by this award of assistance.

15. Will comply with the Laboratory Animal Welfare Act of 1966 (P.L. 89-544, as amended, 7 U.S.C 2131 et seq.) pertaining to the care, handling, and treatment of warm blooded animals held for research, teaching, or other activities supported by this award of assistance.

16. Will comply with the Lead-Based Paint Poisoning Prevention Act (42 U.S.C. §§ 4801 et seq.) which prohibits the use of lead based paint in construction or rehabilitation of residence structures.

17. Will cause to be performed the required financial and compliance audits in accordance with the Single Audit Act of 1984.

18. Will comply with all applicable requirements of all other Federal laws, executive orders, regulations and policies governing this program.

SIGNATURE OF AUTHORIZED CERTIFYING OFFICIAL	TITLE
APPLICANT ORGANIZATION	DATE SUBMITTED

SF 424B (4-88) Back

Attachment E

OMB Approved No. 0348-0041

BUDGET INFORMATION — Construction Programs

NOTE: Certain Federal assistance programs require additional computations to arrive at the Federal share of project costs eligible for participation. If such is the case you will be notified.

COST CLASSIFICATION	a. Total Cost	b. Costs Not Allowable for Participation	c. Total Allowable Costs (Column a-b)
1. Administrative and legal expenses	$ .00	$ .00	$ .00
2. Land, structures, rights-of-way, appraisals, etc.	$ .00	$ .00	$ .00
3. Relocation expenses and payments	$ .00	$ .00	$ .00
4. Architectural and engineering fees	$ .00	$ .00	$ .00
5. Other architectural and engineering fees	$ .00	$ .00	$ .00
6. Project inspection fees	$ .00	$ .00	$ .00
7. Site work	$ .00	$ .00	$ .00
8. Demolition and removal	$ .00	$ .00	$ .00
9. Construction	$ .00	$ .00	$ .00
10. Equipment	$ .00	$ .00	$ .00
11. Miscellaneous	$ .00	$ .00	$ .00
12. SUBTOTAL	$ .00	$ .00	$ .00
13. Contingencies (sum of lines 1-11)	$ .00	$ .00	$ .00
14. SUBTOTAL	$ .00	$ .00	$ .00
15. Project (program) income	$ .00	$ .00	$ .00
16. TOTAL PROJECT COSTS (subtract #15 from # 14)	$ .00	$ .00	$ .00
FEDERAL FUNDING			
17. Federal assistance requested, calculate as follows: Enter eligible costs from line 16c Multiply X _____ % (Consult Federal agency for Federal percentage share). Enter the resulting Federal share.			$ .00

Authorized for Local Reproduction

Standard Form 424C (4-88)
Prescribed by OMB Circular A-102

INSTRUCTIONS FOR THE SF-424C

This sheet is to be used for the following types of applications: (1) "New" (means a new [previously unfunded] assistance award); (2) "Continuation" (means funding in a succeeding budget period which stemmed from a prior agreement to fund); and (3) "Revised" (means any changes in the Federal government's financial obligations or contingent liability from an existing obligation). If there is no change in the award amount there is no need to complete this form. Certain Federal agencies may require only an explanatory letter to effect minor (no cost) changes. If you have questions please contact the Federal agency.

Column a. — If this is an application for a "New" project, enter the total estimated cost of each of the items listed on lines 1 through 16 (as applicable) under "COST CLASSIFICATIONS."

If this application entails a change to an existing award, enter the eligible amounts *approved under the previous award* for the items under "COST CLASSIFICATION."

Column b. —If this is an application for a "New" project, enter that portion of the cost of each item in Column a. which is *not* allowable for Federal assistance. Contact the Federal agency for assistance in determining the allowability of specific costs.

If this application entails a change to an existing award, enter the adjustment [+ or (-)] to the previously approved costs (from column a.) reflected in this application.

Column c. — This is the net of lines 1 through 16 in columns "a." and "b."

Line 1 — Enter estimated amounts needed to cover administrative expenses. Do not include costs which are related to the normal functions of government. Allowable legal costs are generally only those associated with the purchase of land which is allowable for Federal participation and certain services in support of construction of the project.

Line 2 — Enter estimated site and right(s)-of-way acquisition costs (this includes purchase, lease, and/or easements).

Line 3 — Enter estimated costs related to relocation advisory assistance, replacement housing, relocation payments to displaced persons and businesses, etc.

Line 4 — Enter estimated basic engineering fees related to construction (this includes start-up services and preparation of project performance work plan).

Line 5 — Enter estimated engineering costs, such as surveys, tests, soil borings, etc.

Line 6 — Enter estimated engineering inspection costs.

Line 7 — Enter estimated costs of site preparation and restoration which are not included in the basic construction contract.

Line 9 — Enter estimated cost of the construction contract.

Line 10 — Enter estimated cost of office, shop, laboratory, safety equipment, etc. to be used at the facility, if such costs are not included in the construction contract.

Line 11 — Enter estimated miscellaneous costs.

Line 12 — Total of items 1 though 11.

Line 13 — Enter estimated contingency costs. (Consult the Federal agency for the percentage of the estimated construction cost to use.)

Line 14 — Enter the total of lines 12 and 13.

Line 15 — Enter estimated program income to be earned during the grant period, e.g., salvaged materials, etc.

Line 16 — Subtract line 15 from line 14.

Item 17 — This block is for the computation of the Federal share. Multiply the total allowable project costs from line 16, column "c." by the Federal percentage share (this may be up to 100 percent; consult Federal agency for Federal percentage share) and enter the product on line 17.

Attachment F

OMB Approved No. 0348-0042

ASSURANCES — CONSTRUCTION PROGRAMS

Note: Certain of these assurances may not be applicable to your project or program, If you have questions, please contact the Awarding Agency. Further, certain federal assistance awarding agencies may require applicants to certify to additional assurances. If such is the case, you will be notified.

As the duly authorized representative of the applicant I certify that the applicant:

1. Has the legal authority to apply for Federal assistance, and the institutional, managerial and financial capability (including funds sufficient to pay the non-Federal share of project costs) to ensure proper planning, management and completion of the project described in this application.
2. Will give the awarding agency, the Comptroller General of the United States, and if appropriate, the State, through any authorized representative, access to and the right to examine all records, books, papers, or documents related to the assistance; and will establish a proper accounting system in accordance with generally accepted accounting standards or agency directives.
3. Will not dispose of, modify the use of, or change the terms of the real property title, or other interest in the site and facilities without permission and instructions from the awarding agency. Will record the Federal interest in the title of real property in accordance with awarding agency directives and will include a covenant in the title of real property acquired in whole or in part with Federal assistance funds to assure nondiscrimination during the useful life of the project.
4. Will comply with the requirements of the assistance awarding agency with regard to the drafting, review and approval of construction plans and specifications.
5. Will provide and maintain competent and adequate engineering supervision at the construction site to ensure that the complete work conforms with the approved plans and specifications and will furnish progress reports and such other information as may be required by the assistance awarding agency or State.
6. Will initiate and complete the work within the applicable time frame after receipt of approval of the awarding agency.
7. Will establish safeguards to prohibit employees from using their positions for a purpose that constitutes or presents the appearance of personal or organizational conflict of interest, or personal gain.
8. Will comply with the Intergovernmental Personnel Act of 1970 (42 U.S.C. §§ 4728-4763) relating to prescribed standards for merit systems for programs funded under one of the nineteen statutes or regulations specified in Appendix A of OPM's Standards for a Merit System of Personnel Administration (5 C.F.R. 900, Subpart F).
9. Will comply with the Lead-Based Paint Poisoning Prevention Act (42 U.S.C. §§ 4801 et seq.) which prohibits the use of lead based paint in construction or rehabilitation of residence structures.
10. Will comply with all Federal statues relating to non-discrimination. These include but are not limited to: (a) Title VI of the Civil Rights Act of 1964 (P.L. 88-352) which prohibits discrimination on the basis of race, color or national origin; (b) Title IX of the Education Amendments of 1972, as amended (20 U.S.C. §§ 1681-1683, and 1685-1686) which prohibits discrimination on the basis of sex; (c) Section 504 of the Rehabilitation Act of 1973, as amended (29 U.S.C. § 794) which prohibit discrimination of the basis of handicaps; (d) the Age Discrimination Act of 1975, as amended (42 U.S.C. §§ 6101-6107) which prohibits discrimination on the basis of age; (e) the Drug Abuse Office and Treatment Act of 1972 (P.L. 93-255), as amended, relating to non-discrimination on the basis of drug abuse; (f) the Comprehensive Alcohol Abuse and Alcoholism Prevention, Treatment and Rehabilitation Act of 1970 (P.L. 91-616), as amended, relating to nondiscrimination on the basis of alcohol abuse or alcoholism; (g) §§ 523 and 527 of the Public Health Service Act of 1912 (42 U.S.C. 290 dd-3 and 290 ee-3), as amended, relating to confidentiality of alcohol and drug abuse patient records; (h) Title VIII of the Civil Rights Act of 1968 (42 U.S.C. § 3601 et seq.), as amended, relating to non-discrimination in the sale, rental or financing of housing; (i) any other non-discrimination provisions in the specific statute(s) under which application for Federal assistance is being made, and (j) the requirements on any other non-discrimination Statute(s) which may apply to the application.

Standard Form 424D (4-88)
Prescribed by OMB Circular A-102

uthorized for Local Reproduction

11. Will comply, or has already complied, with the requirements of Titles II and III of the Uniform Relocation Assistance and Real Property Acquisition Policies Act of 1970 (P.L. 91-646) which provides for fair and equitable treatment of persons displaced or whose property is acquired as a result of Federal and federally assisted programs. These requirements apply to all interests in real property acquired for project purposes regardless of Federal participation in purchases.

12. Will comply with the provisions of the Hatch Act (5 U.S.C. §§ 1501-1508 and 7324-7328) which limit the political activities of employees whose principal employment activities are funded in whole or in part with Federal funds.

13. Will comply, as applicable, with the provisions of the Davis-Bacon Act (40 U.S.C. §§ 276a to 276a-7), the Copeland Act (40 U.S.C. § 276c and 18 U.S.C. § 874), the Contract Work Hours and Safety Standards Act (40 U.S. §§ 327-333) regarding labor standards for federally assisted construction subagreements.

14. Will comply with the flood insurance purchase requirements of Section 102(a) of the Flood Disaster Protection Act of 1973 (P.L. 93-234) which requires recipients in a special flood hazard area to participate in the program and to purchase flood insurance if the total cost of insurable construction and acquisition is $10,000 or more.

15. Will comply with environmental standards which may be prescribed pursuant to the following: (a) institution of environmental quality control measures under the National Environmental Policy Act of 1969 (P.L. 91-190) and Executive Order (EO) 11514; (b) Environmental Policy Act of 1969 (P.L. 91-190) and Executive Order (EO) 11514; (b) notification of violating facilities pursuant to EO 11738; (c) protection of wetlands pursuant to EO 11990, (d) evaluation of flood hazards in floodplains in accordance with EO 11988; (e) assurance of project consistency with the approved State management program developed under the Coastal Zone Management Act of 1972 (16 U S C §§ 1451 et seq.); (f) conformity of Federal actions to State (Clean Air) Implementation Plans under Section 176(c) of the Clean Air Act of 1955, as amended (42 U.S.C. § 7401 et seq); (g) protection of underground sources of drinking water under the Safe Drinking Water Act of 1974, as amended, (P L. 93-523); and (h) protection of endangered species under the Endangered Species Act of 1973, as amended, (P L. 93-205).

16. Will comply with the Wild and Scenic Rivers Act of 1968 (16 U.S.C. §§ 1271 et seq.) related to protecting components or potential components of the national wild and scenic rivers system

17. Will assist the awarding agency in assuring compliance with Section 106 of the National Historic Preservation Act of 1966, as amended (16 U.S.C. 470), EO 11593 (identification and preservation of historic properties), and the Archaeological and Historic Preservation Act of 1974 (16 U.S.C. 469a-1 et seq).

18. Will cause to be performed the required financial and compliance audits in accordance with the Single Audit Act of 1984.

19. Will comply with all applicable requirements of all other Federal laws, Executive Orders, regulations and policies governing this program

SIGNATURE OF AUTHORIZED CERTIFYING OFFICIAL	TITLE
APPLICANT ORGANIZATION	DATE SUBMITTED

BILLING CODE 4150-04-C

SF 424D (4-88) Back

Attachment G—State Single Points of Contact

Alabama

Mrs. Moncell Thornell, State Single Point of Contact, Alabama Department of Economic & Community Affairs, 3465 Norman Bridge Road, Post Office Box 250347, Montgomery, Alabama 36125–0347, telephone (205) 284–8905

Arizona

Ms. Janice Dunn, Arizona State Clearinghouse, 3800 N. Central Avenue, Fourteenth Floor, Phoenix, Arizona 85012, telephone (602) 280–1315

Arkansas

Mr. Joseph Gillesble, Manager, State Clearinghouse, Office of Intergovernmental Service, Department of Finance and Administration, P.O. Box 3278, Little Rock, Arkansas 72203, telephone (501) 371–1074

California

Glenn Stober, Grants Coordinator, Office of Planning and Research, 1400 Tenth Street, Sacramento, California 95814, telephone (916) 323–7480

Colorado

State Single Point of Contact, State Clearinghouse, Division of Local Government, 1313 Sherman Street, Room 520, Denver, Colorado 80203, telephone (303) 866–2156

Connecticut

Under Secretary, Attn: Intergovernmental Review coordinator, Comprehensive Planning Division, Office of Policy and Management, 80 Washington Street, Hartford, Connecticut 06106–4459, telephone (203) 566–3410

Delaware

Francine Booth, State Single Point of Contact, Executive Department, Thomas Collins Building, Dover, Delaware 19903, telephone (302) 736–3326

District of Columbia

Lovetta Davis, State Single Point of Contact, Executive Office of the Mayor, Office of Intergovernmental Relations, Room 416, District Building, 1350 Pennsylvania Avenue, N.W., Washington, D.C. 20004, telephone (202) 727–9111

Florida

Karen McFarland, Director, Florida State Clearinghouse, Executive Office of the Governor, Office of Planning and Budgeting, The Capitol, Tallahassee, Florida 32399–0001, telephone (904) 488–8114

Georgia

Charles H. Badger, Administrator, Georgia State Clearinghouse, 270 Washington Street, S.W., Atlanta, Georgia 30334, telephone (404) 656–3855

Hawaii

Mr. Harold S. Masumoto, Acting Director, Office of State Planning, Department of Planning and Economic Development, Office of the Governor, State Capitol, Honolulu, Hawaii 96813, telephone (808) 548–3016 or 548–3085

Illinois

Tom Berkshire, State Single Point of Contact, Office of the Governor, State of Illinois, Springfield, Illinois 62706, telephone (217) 782–8639

Indiana

Frank Sullivan, Budget Director, State Budget Agency, 212 State House, Indianapolis, Indiana 46204, telephone (317) 232–5610

Iowa

Steven R. McCann, Division for Community Progress, Iowa Department of Economic Development, 200 East Grand Avenue, Des Moines, Iowa 50309, telephone (515) 281–3725

Kentucky

Robert Leonard, State Single Point of Contact, Kentucky State Clearinghouse, 2nd Floor Capital Plaza Tower, Frankfurt, Kentucky 40601, telephone (502) 564–2382

Maine

State Single Point of Contact, Attn: Joyce Benson, State Planning Office, State House Station #38, Augusta, Maine 04333, telephone (207) 289–3261

Maryland

Mary Abrams, Chief, Maryland State Clearinghouse, Department of State Planning, 301 West Preston Street, Baltimore, Maryland 21201–2365, telephone (301) 225–4490

Massachusetts

State Single Point of Contact, Attn: Beverly Boyle, Executive Office of Communities & Development, 100 Cambridge Street, Room 1803, Boston, Massachusetts 02202, telephone (617) 727–7001

Michigan

Milton O. Waters, Director of Operations, Michigan Neighborhood Builders Alliance, Michigan Department of Commerce, telephone (517) 373–7111

Please direct correspondence to: Manager, Federal Project Review, Michigan Department of Commerce, Michigan Neighborhood Builders Alliance, P.O. Box 30242, Lansing, Michigan 48909, telephone (517) 373–6223

Mississippi

Cathy Mallette, Clearinghouse Officer, Department of Finance and Administration, Office of Policy Development, 421 West Pascagoula Street, Jackson, Mississippi 39203, telephone (601) 960–4280

Missouri

Lois Pohl, Federal Assistance Clearinghouse, Office of Administration, Division of General Services, P.O. Box 809, Room 430, Truman Building, Jefferson City, Missouri 65102, telephone (314) 751–4834

Montana

Deborah Stanton, State Single Point of Contact, Intergovernmental Review Clearinghouse, c/o Office of Budget and Program Planning, Capitol Station, Room 202–State Capitol, Helena, Montana 59620, telephone (406) 444–5522

Nevada

Department of Administration, State Clearinghouse, Capitol Complex, Carson City, NV 89710, Attn: John B. Walker, Clearinghouse Coordinator

New Hampshire

Jeffery H. Taylor, Director, New Hampshire Office of State Planning, Attn: Intergovernmental Review Process/James E. Bieber, 2½ Beacon Street, Concord, New Hampshire 03301, telephone (603) 271–2155

New Jersey

Barry Skokowski, Director, Division of Local Government Services, Department of Community Affairs, CN 803, Trenton, New Jersey 08625–0803, telephone (609) 292–6613

Please direct correspondence and questions to: Nelson S. Silver, State Review Process, Division of Local Government Services, CN 803, Trenton, New Jersey 08625–0803, telephone (609) 292–9025.

New Mexico

Dorothy E. (Duffy) Rodriguez, Deputy Director, State Budget Division, Department of Finance & Administration, Room 190, Bataan Memorial Building, Santa Fe, New Mexico 87503, telephone (505) 827–3640

New York

New York State Clearinghouse, Division of the Budget, State Capitol, Albany, New York 12224, telephone (518) 474–1605

North Carolina

Mrs. Chrys Baggett, Director, Intergovernmental Relations, N.C. Department of Administration, 116 W. Jones Street, Raleigh, North Carolina 27611, telephone (919) 0499

North Dakota

William Robinson, State Single Point of Contact, Office of Intergovernmental Affairs, Office of Management and Budget, 14th Floor, State Capitol, Bismarck, North Dakota 58505, telephone (701) 224–2094

Ohio

Larry Weaver, State Single Point of Contact, State/Federal Funds Coordinator, State Clearinghouse, Office of Budget and Management, 30 East Broad Street, 34th Floor, Columbus, Ohio 43266–0411, telephone (614) 466–0698

Oklahoma

Don Strain, State Single Point of Contact, Oklahoma Department of Commerce, Office of Federal Assistance Management, 6601 Broadway Extension, Oklahoma City, Oklahoma 73116, telephone (405) 843–9770

Oregon

Attn: Dolores Streeter, State Single Point of Contact, Intergovernmental Relations Division, State Clearinghouse, 155 Cottage Street, NE., Salem, Oregon 97310, telephone (503) 373–1998

Pennsylvania

Sandra Kline, Project Coordinator, Pennsylvania Intergovernmental Council, P.O. Box 11880, Harrisburg, Pennsylvania 17108, telephone (717) 783–3700

Rhode Island

Daniel W. Varin, Associate Director, Statewide Planning Program, Department of Administration, Division of Planning, 265 Melrose Street, Providence, Rhode Island 02907, telephone (401) 277–2656

Please direct correspondence and questions to: Review Coordinator, Office of Strategic Planning

South Carolina

Danny L. Cromer, State Single Point of Contact, Grant Services, Office of the Governor, 1205 Pendleton Street, Room 477, Columbia, South Carolina 29201, telephone (803) 734–0493

South Dakota

Susan Comer, State Clearinghouse Coordinator, Office of the Governor, 500 East Capitol, Pierre, South Dakota 57501, telephone (605) 773–3212

Tennessee

Charles Brown, State Single Point of Contact, State Planning Office, 500 Charlotte Avenue, 309 John Sevier Building, Nashville, Tennessee 37219, telephone (615) 741–1676

Texas

Tom Adams, Governor's Office of Budget and Planning, P.O. Box 12428, Austin, Texas 78711, telephone (512) 463–1778

Utah

Utah State Clearinghouse, Attn: Carolyn Wright, Office of Planning and Budget, State of Utah, 116 State Capitol Building, Salt Lake City, Utah 84114, telephone (801) 538–1547

Vermont

Bernard D. Johnson, Assistant Director, Office of Policy Research & Coordination, Pavilion Office Building, 109 State Street, Montpelier, Vermont 05602, telephone (802) 828–3326

Washington

Marilyn Dawson, Washington Intergovernmental Review Process, Department of Community Development, 9th and Columbia Building, Mail Stop GH–51, Olympia, Washington 98504–4151, telephone (206) 753–4978

West Virginia

Fred Cutlip, Director, Community Development Division, Governor's Office of Community and Industrial Development, Building #6, Room 553, Charleston, West Virginia 25305, telephone (304) 348–4010

Wisconsin

James R. Klauser, Secretary, Wisconsin Department of Administration, 101 South Webster Street, GEF 2, P.O. Box 7864, Madison, Wisconsin 53707–7864, telephone (608) 266–1741

Please direct correspondence and questions to: William C. Carey, Section Chief, Federal-State Relations Office, Wisconsin Department of Administration, (608) 266–0267

Wyoming

Ann Redman, State Single Point of Contact, Wyoming State Clearinghouse, State Planning Coordinator's Office, Capitol Building, Cheyenne, Wyoming 82002, telephone (307) 777–7574

Territories

Guam

Michael J. Reidy, Director, Bureau of Budget and Management Research, Office of the Governor, P.O. Box 2950, Agana, Guam 96910, telephone (671) 472–2285

Northern Mariana Islands

State Single Point of Contact, Planning and Budget Office, Office of the Governor, Saipan, CM, Northern Mariana Islands 96950

Puerto Rico

Patria Custodio/Israel Soto Marrero, Chairman/Director, Puerto Rico Planning Board, Minillas Government Center, P.O. Box 41119, San Juan, Puerto Rico 00940–9985, telephone (809) 727–4444

Virgin Islands

Jose L. George, Director, Office of Management and Budget, No. 32 & 33 Kongens Gade, Charlotte Amalie, V.I. 00802, telephone (809) 774–0750

BILLING CODE 4150–04–M

Attachment H

U.S. Department of Health and Human Services
Certification Regarding Drug-Free Workplace Requirements
Grantees Other Than Individuals

By signing and/or submitting this application or grant agreement, the grantee is providing the certification set out below.

This certification is required by regulations implementing the Drug-Free Workplace Act of 1988, 45 CFR Part 76, Subpart F. The regulations, published in the May 25, 1990 **Federal Register**, require certification by grantees that they will maintain a drug-free workplace. The certification set out below is a material representation of fact upon which reliance will be placed when the Department of Health and Human Services (HHS) determines to award the grant. If it is later determined that the grantee knowingly rendered a false certification, or otherwise violates the requirements of the Drug-Free Workplace Act, HHS, in addition to any other remedies available to the Federal Government, may taken action authorized under the Drug-Free Workplace Act. False certification or violation of the certification shall be grounds for suspension of payments, suspension or termination of grants, or governmentwide suspension or debarment.

Workplaces under grants, for grantees other than individuals, need not be identified on the certification. If known, they may be identified in the grant application. If the grantee does not identify the workplaces at the time of application, or upon award, if there is no application, the grantee must keep the identity of the workplace(s) on file in its office and make the information available for Federal inspection. Failure to identify all known workplaces constitutes a violation of the grantee's drug-free workplace requirements.

Workplace identifications must include the actual address of buildings (or parts of buildings) or other sites where work under the grant takes place. Categorical descriptions may be used (e.g., all vehicles of a mass transit authority or State highway department while in operation, State employees in each local unemployment office, performers in concert halls or radio studios.)

If the workplace identified to HHS changes during the performance of the grant, the grantee shall inform the agency of the change(s), if it previously identified the workplaces in question (see above).

Definitions of terms in the Nonprocurement Suspension and Debarment common rule and Drug-Free Workplace common rule apply to this certification. Grantees' attention is called, in particular, to the following definitions from these rules:

"**Controlled substance**" means a controlled substance in Schedules I through V of the Controlled Substances Act (21 USC 812) and as further defined by regulation (21 CFR 1308.11 through 1308.15).

"**Conviction**" means a finding of guilt (including a plea of nolo contendere) or imposition of sentence, or both, by any judicial body charged with the responsibility to determine violations of the Federal or State criminal drug statutes;

"**Criminal drug statute**" means a Federal or non-Federal criminal statute involving the manufacture, distribution, dispensing, use, or possession of any controlled substance;

"**Employee**" means the employee of a grantee directly engaged in the performance of work under a grant, including: (i) All "direct charge" employees; (ii) all "indirect charge" employees unless their impact or involvement is insignificant to the performance of the grant; and, (iii) temporary personnel and consultants who are directly engaged in the performance of work under the grant and who are on the grantee's payroll. This definition does not include workers not on the payroll of the grantee (e.g., volunteers, even if used to meet a matching requirement; consultants or independent contractors not on the grantee's payroll; or employees of subrecipients or subcontractors in covered workplaces).

The grantee certifies that it will or will continue to provide a drug-free workplace by:

(a) Publishing a statement notifying employees that the unlawful manufacture, distribution, dispensing, possession or use of a controlled substance is prohibited in the grantee's workplace and specifying the actions that will be taken against employees for violation of such prohibition;

(b) Establishing an ongoing drug-free awareness program to inform employees about:

(1) The dangers of drug abuse in the workplace; (2) The grantee's policy of maintaining a drug-free workplace; (3) Any available drug counseling, rehabilitation, and employee assistance programs; and, (4) The penalties that may be imposed upon employees for drug abuse violations occurring in the workplace;

(c) Making it a requirement that each employee to be engaged in the performance of the grant be given a copy of the statement required by paragraph (a);

(d) Notifying the employee in the statement required by paragraph (a) that, as a condition of employment under the grant, the employee will:

(1) Abide by the terms of the statement; and, (2) Notify the employer in writing of his or her conviction for a violation of a criminal drug statute occurring in the workplace no later than five calendar days after such conviction;

(e) Notifying the agency in writing, within ten calendar days after receiving notice under subparagraph (d)(2) from an employee or otherwise receiving actual notice of such conviction. Employers of convicted employees must provide notice, including position title, to every grant officer or other designee on whose grant activity the convicted employee was working, unless the Federal agency has designated a central point for the receipt of such notices. Notice shall include the identification number(s) of each affected grant;

(Continued on reverse side of this sheet)

HHS—Certification Regarding Drug-Free Workplace Requirements—continued from reverse page

(f) Taking one of the following actions, within 30 calendar days of receiving notice under subparagraph (d)(2), with respect to any employee who is so convicted:

(1) Taking appropriate personnel action against such an employee, up to and including termination, consistent with the requirements of the Rehabilitation Act of 1973, as amended; or, (2) Requiring such employee to participate satisfactorily in a drug abuse assistance or rehabilitation program approved for such purposes by a Federal, State, or local health, law enforcement, or other appropriate agency;

(g) Making a good faith effort to continue to maintain a drug-free workplace through implementation of paragraphs (a), (b), (c), (d), (e) and (f).

The grantee may insert in the space provided below the site(s) for the performance of work done in connection with the specific grant (use attachments, if needed):

Place of Performance (Street address, City, County, State, ZIP Code)_____

_____

Check ___ if there are workplaces on file that are not identified here.

Sections 76.630(c) and (d)(2) and 76.635(a)(1) and (b) provide that a Federal agency may designate a central receipt point for STATE-WIDE AND STATE AGENCY-WIDE certifications, and for notification of criminal drug convictions. For the Department of Health and Human Services, the central receipt point is: Division of Grants Management and Oversight, Office of Management and Acquisition, Department of Health and Human Services, Room 517-D, 200 Independence Avenue, S.W., Washington, D.C. 20201.

Signature_____ **Date**_____

Title_____

Organization_____

DGMO Form#2 Revised May 1990

BILLING CODE 4150-04-C

Attachment I—Certification Regarding Debarment, Suspension, and Other Responsibility Matters—Primary Covered Transactions

By signing and submitting this proposal, the applicant, defined as the primary participant in accordance with 45 CFR part 76, certifies to the best of its knowledge and belief that its principals involved:

(a) Are not presently debarred, suspended, proposed for debarment, declared ineligible, or voluntarily excluded from covered transactions by any Federal department or agency;

(b) Have not within a 3-year period preceding this proposal been convicted of or had a civil judgment rendered against them for commission of fraud or a criminal offense in connection with obtaining, attempting to obtain, or performing a public (Federal, State, or local) transaction or contract under a public transaction; violation of Federal or State antitrust statutes or commission of embezzlement, theft, forgery, bribery, falsification or destruction of records, making false statements, or receiving stolen property;

(c) Are not presently indicted or otherwise criminally or civilly charged by a government entity (Federal, State or local) with commission of any of the offenses enumerated in paragraph (1)(b) of this certification; and

(d) Have not within a 3-year period preceding this application/proposal had one or more public transactions (Federal, State, or local) terminated for cause or default.

The inability of a person to provide the certification required above will not necessarily result in denial of participation for this covered transaction. If necessary, the prospective participant shall submit an explanation of why it cannot provide the certification. The certification or explanation will be considered in connection with the Department of Health and Human Services' (HHS) determination whether to enter into this transaction. However, failure of the prospective primary participant to furnish a certification or an explanation shall disqualify such person from participation in this transaction. The prospective primary participant agrees that by submitting this proposal, it will include the clause entitled "Certification Regarding Debarment, Suspension, Ineligibility, and Voluntary Exclusion—Lower Tier Covered Transactions", provided below, without modification in all lower tier covered transactions and in all solicitations for lower tier covered actions.

Certification Regarding Debarment, Suspension, Ineligibility and Voluntary Exclusions—Lower Tier Covered Transactions (To Be Supplied to Lower Tier Participants)

By signing and submitting this lower tier proposal, the prospective lower tier participant, as defined in 45 CFR part 76, certifies to the best of its knowledge and belief that it and its principals:

(a) Are not presently debarred, suspended, proposed for debarment, declared ineligible, or voluntarily excluded from participation in this transaction by any Federal department or agency.

(b) Where the prospective lower tier participant is unable to certify to any of the above, such prospective participant shall attach an explanation to this proposal.

The prospective lower tier participant further agrees by submitting this proposal that it will include this clause entitled "Certification Regarding Debarment, Suspension, Ineligibility and Voluntary Exclusions—Lower Tier Covered Transactions" without modification in all lower tier covered transactions and in all solicitations for lower tier covered transactions.

Attachment J—Restrictions on Lobbying

Certification for Contracts, Grants, Loans, and Cooperative Agreements

The undersigned certifies, to the best of his or her knowledge and belief, that:

(1) No Federal appropriated funds have been paid or will be paid, by or on behalf of the undersigned, to any person for influencing or attempting to influence an officer or employee of any agency, a Member of Congress in connection with the awarding of any Federal contract, the making of any Federal grant, the agreement, and the extension, continuation, renewal, amendment, or modification of any Federal contract, grant, loan, or cooperative agreement.

(2) If any funds other than Federal appropriated funds have been paid or will be paid to any person for influencing or attempting to influence an officer or employee of any agency, a Member of Congress in connection with this Federal contract, grant, loan, or cooperative agreement, the undersigned shall complete and submit Standard Form–LLL, "Disclosure Form to Report Lobbying," in accordance with its instructions.

(3) The undersigned shall require that the language of this certification be included in the award documents for subawards at all tiers (including subcontracts, subgrants and contracts under grants, loans, and cooperative agreements) and that all subrecipients shall certify and disclose accordingly.

This certification is a material representation of fact upon which reliance was placed when this transaction was made or entered into. Submission of this certification is a prerequisite for making or entering into this transaction imposed by section 1352, title 31, U.S. Code. Any person who fails to file the required certification shall be subject to a civil penalty of not less than $10,000 and not more than $100,000 for each such failure.

Statement for Loan Guarantees and Loan Insurance

The undersigned states, to the best of his or her knowledge and belief that:

If any funds have been paid or will be paid to any person for influencing or attempting to influence an officer or employee of any agency, a Member of Congress, an officer or employee of Congress, or an employee of a Member of Congress in connection with this commitment providing for the United States to insure or guarantee a loan, the undersigned shall complete and submit Standard Form LLL, "Disclosure Form to Report Lobbying," in accordance with its instructions.

Signature

Organization

Date

BILLING CODE 4150-04-M

DISCLOSURE OF LOBBYING ACTIVITIES

Approved by OMB
0348-0046

Complete this form to disclose lobbying activities pursuant to 31 U.S.C. 1352
(See reverse for public burden disclosure.)

1. Type of Federal Action:
☐ a. contract
b. grant
c. cooperative agreement
d. loan
e. loan guarantee
f. loan insurance

2. Status of Federal Action:
☐ a. bid/offer/application
b. initial award
c. post-award

3. Report Type:
☐ a. initial filing
b. material change
For Material Change Only:
year _____ quarter _____
date of last report _____

4. Name and Address of Reporting Entity:
☐ Prime ☐ Subawardee
Tier _____, *if known:*

Congressional District, *if known:*

5. If Reporting Entity in No. 4 is Subawardee, Enter Name and Address of Prime:

Congressional District, *if known:*

6. Federal Department/Agency:

7. Federal Program Name/Description:

CFDA Number, *if applicable:* _____

8. Federal Action Number, *if known:*

9. Award Amount, *if known:*
$

10. a. Name and Address of Lobbying Entity *(if individual, last name, first name, MI):*

b. Individuals Performing Services *(including address if different from No. 10a) (last name, first name, MI):*

(attach Continuation Sheet(s) SF-LLL-A, if necessary)

11. Amount of Payment *(check all that apply):*
$ _____ ☐ actual ☐ planned

12. Form of Payment *(check all that apply):*
☐ a. cash
☐ b. in-kind; specify: nature _____
value _____

13. Type of Payment *(check all that apply):*
☐ a. retainer
☐ b. one-time fee
☐ c. commission
☐ d. contingent fee
☐ e. deferred
☐ f. other; specify: _____

14. Brief Description of Services Performed or to be Performed and Date(s) of Service, including officer(s), employee(s), or Member(s) contacted, for Payment Indicated in Item 11:

(attach Continuation Sheet(s) SF-LLL-A, if necessary)

15. Continuation Sheet(s) SF-LLL-A attached: ☐ Yes ☐ No

16. Information requested through this form is authorized by title 31 U.S.C. section 1352. This disclosure of lobbying activities is a material representation of fact upon which reliance was placed by the tier above when this transaction was made or entered into. This disclosure is required pursuant to 31 U.S.C. 1352. This information will be reported to the Congress semi-annually and will be available for public inspection. Any person who fails to file the required disclosure shall be subject to a civil penalty of not less than $10,000 and not more than $100,000 for each such failure.

Signature: _____
Print Name: _____
Title: _____
Telephone No.: _____ **Date:** _____

Federal Use Only:

Authorized for Local Reproduction
Standard Form - LLL

INSTRUCTIONS FOR COMPLETION OF SF-LLL, DISCLOSURE OF LOBBYING ACTIVITIES

This disclosure form shall be completed by the reporting entity, whether subawardee or prime Federal recipient, at the initiation or receipt of a covered Federal action, or a material change to a previous filing, pursuant to title 31 U.S.C. section 1352. The filing of a form is required for each payment or agreement to make payment to any lobbying entity for influencing or attempting to influence an officer or employee of any agency, a Member of Congress, an officer or employee of Congress, or an employee of a Member of Congress in connection with a covered Federal action. Use the SF-LLL-A Continuation Sheet for additional information if the space on the form is inadequate. Complete all items that apply for both the initial filing and material change report. Refer to the implementing guidance published by the Office of Management and Budget for additional information.

1. Identify the type of covered Federal action for which lobbying activity is and/or has been secured to influence the outcome of a covered Federal action.
2. Identify the status of the covered Federal action.
3. Identify the appropriate classification of this report. If this is a followup report caused by a material change to the information previously reported, enter the year and quarter in which the change occurred. Enter the date of the last previously submitted report by this reporting entity for this covered Federal action.
4. Enter the full name, address, city, state and zip code of the reporting entity. Include Congressional District, if known. Check the appropriate classification of the reporting entity that designates if it is, or expects to be, a prime or subaward recipient. Identify the tier of the subawardee, e.g., the first subawardee of the prime is the 1st tier. Subawards include but are not limited to subcontracts, subgrants and contract awards under grants.
5. If the organization filing the report in item 4 checks "Subawardee", then enter the full name, address, city, state and zip code of the prime Federal recipient. Include Congressional District, if known.
6. Enter the name of the Federal agency making the award or loan commitment. Include at least one organizational level below agency name, if known. For example, Department of Transportation, United States Coast Guard.
7. Enter the Federal program name or description for the covered Federal action (item 1). If known, enter the full Catalog of Federal Domestic Assistance (CFDA) number for grants, cooperative agreements, loans, and loan commitments.
8. Enter the most appropriate Federal identifying number available for the Federal action identified in item 1 (e.g., Request for Proposal (RFP) number; Invitation for Bid (IFB) number; grant announcement number; the contract, grant, or loan award number; the application/proposal control number assigned by the Federal agency). Include prefixes, e.g., "RFP-DE-90-001."
9. For a covered Federal action where there has been an award or loan commitment by the Federal agency, enter the Federal amount of the award/loan commitment for the prime entity identified in item 4 or 5.
10. (a) Enter the full name, address, city, state and zip code of the lobbying entity engaged by the reporting entity identified in item 4 to influence the covered Federal action.

    (b) Enter the full names of the individual(s) performing services, and include full address if different from 10 (a). Enter Last Name, First Name, and Middle Initial (MI).
11. Enter the amount of compensation paid or reasonably expected to be paid by the reporting entity (item 4) to the lobbying entity (item 10). Indicate whether the payment has been made (actual) or will be made (planned). Check all boxes that apply. If this is a material change report, enter the cumulative amount of payment made or planned to be made.
12. Check the appropriate box(es). Check all boxes that apply. If payment is made through an in-kind contribution, specify the nature and value of the in-kind payment.
13. Check the appropriate box(es). Check all boxes that apply. If other, specify nature.
14. Provide a specific and detailed description of the services that the lobbyist has performed, or will be expected to perform, and the date(s) of any services rendered. Include all preparatory and related activity, not just time spent in actual contact with Federal officials. Identify the Federal official(s) or employee(s) contacted or the officer(s), employee(s), or Member(s) of Congress that were contacted.
15. Check whether or not a SF-LLL-A Continuation Sheet(s) is attached.
16. The certifying official shall sign and date the form, print his/her name, title, and telephone number.

Public reporting burden for this collection of information is estimated to average 30 mintues per response, including time for reviewing instructions, searching existing data sources, gathering and maintaining the data needed, and completing and reviewing the collection of information. Send comments regarding the burden estimate or any other aspect of this collection of information, including suggestions for reducing this burden, to the Office of Management and Budget, Paperwork Reduction Project (0348-0046), Washington, D.C. 20503.

DISCLOSURE OF LOBBYING ACTIVITIES
CONTINUATION SHEET

Approved by OMB
0348-0046

Reporting Entity: _____ Page _____ of _____

[FR Doc. 91-21345 Filed 9-5-91; 8:45 am]

BILLING CODE 4150-04-C

Authorized for Local Reproduction
Standard Form - LLL-A

federal register

Friday
September 6 19

Part XII

Environmental Protection Agency

40 CFR Part 85

Waiver of Preemption to California for Nonroad Engine and Vehicle Standards; Proposed Rules

California State Nonroad Engine and Vehicle Pollution Control Standards; Authorization of State Standards; Proposed Decision of the Administrator; Opportunity for Public Hearing; Notice

ENVIRONMENTAL PROTECTION AGENCY

40 CFR Part 85

[AMS-FRL-3992-6]

Waiver of Preemption to California for Nonroad Engine and Vehicle Standards

AGENCY: Environmental Protection Agency (EPA).

ACTION: Notice of proposed rulemaking (NPRM).

SUMMARY: This proposed rule sets forth requirements and procedures for EPA authorization of California adoption and enforcement of standards and other requirements relating to the control of emissions from nonroad vehicles or engines under section 209(e) of the Clean Air Act (Act), as amended.

The proposal includes definitions of the new nonroad engines and vehicles that the Act specifies as preempt from state regulation. These definitions of "farm equipment", "construction equipment", and "locomotive" will clarify which nonroad engines and vehicles are not preempt and are thus subject to state regulation. EPA will not, however, in this rulemaking clarify whether certain internal combustion engines are stationary sources and subject to regulations under Title I of the Act or are nonroad engines and therefore potentially subject to nonroad regulations under Title II of the Act. This issue will be addressed in a subsequent nonroad rulemaking. The NPRM also provides procedures by which EPA may authorize California to adopt standards and provides guidance for states that adopt California standards. Finally, the proposal discusses the criteria to be used by EPA in its analysis of California authorization requests. The NPRM will provide guidance to California, other states, and vehicle and engine manufacturers regarding nonroad engine and vehicle preemption.

DATES: EPA will conduct a public hearing on this Notice of Proposed Rulemaking on September 20, 1991, from 9 a.m. to 5 p.m. in Washington, DC. Written comments on this notice will be accepted for 30 days following the hearing, until October 21, 1991.

ADDRESSES: The public hearing will be held in the Captain's Room of the Channel Inn Hotel, 650 Water Street, SW. (corner of 7th & Maine), Washington, DC. Written comments should be submitted (in duplicate if possible) to: Director, Manufacturers Operations Division (EN-340F), U.S. Environmental Protection Agency, 401 M Street, SW., Washington, DC 20460. Copies of material relevant to the proposed rule (Docket A-91-18) will be available for public inspection during the working hours of 8:30 a.m. until noon and 1:30 p.m. to 3:30 p.m., Monday through Friday, at: U.S. Environmental Protection Agency, Air Docket (LE-131), room M1500, First Floor Waterside Mall, 401 M Street, SW., Washington, DC 20460 (Telephone (202) 260-7548). A reasonable fee will be charged by EPA for copying docket material.

FOR FURTHER INFORMATION CONTACT: Janice Raburn, Attorney/Advisor, Manufacturers Operations Division (EN-340F), U.S. Environmental Protection Agency, Washington, DC 20460, Telephone: (202) 260-8657.

SUPPLEMENTARY INFORMATION:

Table of Contents

I. Statutory Authority and Background.
II. Discussion of Proposed Regulation.
A. Nonroad Engines and Vehicles.
B. Definition of "new".
C. Definition of "farm equipment".
D. Definition of "construction equipment".
E. Definition of "locomotive".
F. Application/Scope of definitions—"used in".
G. Labeling Requirement.
H. Authorization Criteria and Procedures.
I. State adoption of California Standards.
III. Public Participation.
A. Comments and the Public Docket.
B. Public Participation.
IV. Other Statutory Requirements.
A. Executive Order 12291.
B. Paperwork Reduction Act.
C. Regulatory Flexibility Act.

I. Statutory Authority and Background

EPA is required under section 209(e) of the Clean Air Act (Act), as amended, 42 U.S.C. 7543, to "issue regulations to implement" subsection (e). Section 209(e) of the Act addresses the state adoption of emission standards for new nonroad vehicles and engines.

Under section 209(e), all states are preempted from adopting emissions standards for "[n]ew engines which are used in construction equipment or vehicles or used in farm equipment or vehicles and which are smaller than 175 horsepower" or for "[n]ew locomotives or new engines used in locomotives". In this regulation, EPA proposes definitions for these preempted categories. For nonroad engines and vehicles not included in the preempted categories, EPA is directed to authorize California, after notice and opportunity for public hearing, to adopt and enforce such standards and other requirements if these meet the criteria set forth in the Act. Several of the criteria to be used for nonroad engine and vehicle authorizations are similar to the requirements applicable to motor vehicle waivers under section 209(b), which prohibits state adoption of emission standards for motor vehicles and engines. Section 209(b) directs EPA to waive this prohibition for California if certain criteria are met.

Other states may adopt California nonroad vehicle or engine emission standards under section 209(e) if they comply with several requirements. This provision is similar to section 177 which addresses state adoption of California motor vehicle emission standards.

II. Discussion of Proposed Regulation

A. Nonroad Engines and Vehicles

EPA acknowledges that it will necessary at some point to clarify whether certain internal combustion engines are stationary sources and subject to regulations under Title I of the Act or are nonroad engines and therefore potentially subject to nonroad regulations under Title II of the Act. EPA will not address this issue, however, in this rulemaking. The issue does not need to be resolved in order for EPA to respond to California's request that EPA authorize California's proposed standards for lawn and garden and utility engine as California's proposal affects only engines smaller than 25 horsepower. EPA believes, because equipment that uses engines smaller than 25 horsepower includes hand-held and portable pieces of equipment, such engines are clearly nonroad engines.

The issue is complex. The definitions of " stationary source" in section 111(3) and 302(z) of the Act and of "nonroad engine" in section 216(10) of the Act do not make clear under which Title certain internal combustion engines belong. The internal combustion engines in question are those that used in equipment for reasons other than propulsion. Some examples include pumps, generators and compressors.

The delineation of internal combustion engines as stationary or nonroad sources would require EPA to propose criteria to be used to make various determinations. For example, EPA might determine a horsepower cutoff point that would achieve the best air quality benefit. EPA could also provide criteria regarding whether engines are permanent or transportable.

EPA will address this issue in one of the following regulations. Pursuant to section 213 of the Act, the Administrator will "conduct a study of emissions from nonroad engines and nonroad vehicles to determine if such emissions cause, or significantly contribute to, air pollution which may reasonably be anticipated to endanger public health or welfare." If

the Administrator determines that nonroad emissions are "significant contributors" in more than one ozone or carbon monoxide nonattainment area, the Administrator shall promulgate standards for such nonroad engines. EPA would clarify whether certain internal combustion engines are nonroad engines or stationary sources at that time. The statutory deadline for EPA to issue such standards is twenty-four months from November 15, 1990, the date the Clean Air Act Amendments were enacted. If EPA does not promulgate standards under section 213, the remaining issues pertaining to the distinction between nonroad and stationary sources will be addressed by EPA in a separate rulemaking. Interested parties may choose to comment on this issue at this time. EPA will refer to these comments when the issue is addressed in a later rulemaking.

B. Definitions of "New" as Used in "New Nonroad Engine", "New Nonroad Vehicle", "New Locomotive" and "New Engine Used in Locomotive"

In developing a proposed definition for "new," EPA examined the use of the word "new" not only in section 209, but also in sections 213 and 216. Section 213 directs EPA to study emissions from nonroad engines and vehicles, and to promulgate Federal emission standards for certain categories if they are found to contribute significantly to certain pollutants. EPA is also directed to promulgate emission standards for new locomotives and new engines used in locomotives. Amendments to sections 209 and 213, all of which address nonroad engines and vehicles, were combined in section 222 of the 1990 amendments to the Act. Section 216 provides definitions for part A of Title II, including the definitions of "new motor vehicle" and "new motor vehicle engine". EPA believes the word "new" should be similarly interpreted for both sections 209 and 213 and should be consistent with section 216.

Congress did not define "new", but EPA believes it is reasonable to interpret "new" the same way that "new motor vehicle" is defined. That is, these preemptions apply only to new nonroad engines, new nonroad vehicles, new locomotives and new engines used in locomotives and do not apply to in-use engines which were manufactured before, on, or after the effective date of the 1990 Clean Air Act Amendments. Therefore, EPA defines "new" nonroad engine and "new" nonroad vehicle to mean a nonroad engine or a nonroad vehicle the equitable or legal title to which has never been transferred to an ultimate purchaser. Ultimate purchaser is defined as the first person who in good faith purchases such a new nonroad engine or new nonroad vehicle for purposes other than resale.

Therefore, if under section 213, EPA promulgates emission standards for certain categories of nonroad engines or nonroad vehicles, the standards would apply to "new" engines or vehicles, those to which legal or equitable title has never been transferred. Section 209(e)(1) states that "No state * * * shall adopt or attempt to enforce any standard or other requirement relating to the control of emissions * * *". EPA interprets this to mean that states are only preempted from regulating emissions for the specified categories by adopting standards and other requirements relating to the control of emissions that apply to new engines or vehicles. For engines which are no longer "new", states will be able to adopt regulations such as fuel quality specifications, operational mode limitations, and measures that limit the use of nonroad engines or equipment.

EPA proposes the same definition for "new locomotives" and "new engines used in locomotives". EPA interprets that Congress' intent was to preempt states from regulating emissions or operations of new locomotives and new engines used in locomotives.

If, on the other hand, EPA were to interpret "new" to mean "other than existing nonroad engines and vehicles", the preemption would apply to all nonroad engines and vehicles manufactured after the effective date of the Clean Air Act Amendments, that is, November 15, 1990. This would mean that nonroad engines and vehicles manufactured after that date would never be subject to any kind of state regulation.

For purposes of imported nonroad engines, the proposed definition states that new nonroad engine means a nonroad engine manufactured after the effective date of a regulation issued under section 213 which would be applicable to such engine had it been manufactured for importation into the United States. In practice, this means that an imported nonroad engine will be considered as new at the time of importation if the engine was manufactured after the effective date of standards promulgated under section 213 regardless of whether the engine had already been sold to an ultimate purchaser.

EPA invites comment on this interpretation of "new".

C. Definition of "Farm Equipment"

EPA proposes that *farm equipment* means any internal combustion engine-powered machine primarily used in the commercial production and/or harvesting of food, fiber, wood, or commercial organic products.

Section 209(e)(1) prohibits states from adopting emission standards for "[n]ew engines which are used in * * * farm equipment or vehicles and which are smaller than 175 horsepower." Neither the Act nor its legislative history define or provide additional detail regarding this preemption. EPA has previously addressed, however, the preemption of farm equipment when it published a proposed Federal Implementation Plan (FIP) for the California South Coast Air Quality Management District on September 5, 1990 (55 FR 36458). The proposal included control of volatile organic compounds (VOC) and carbon monoxide (CO) emissions from off-highway mobile sources. EPA proposed to exempt commercial farm vehicles and equipment from the category requiring emission controls regardless of engine size or type. In the FIP, "commercial farm vehicles" meant that the vehicle or equipment was unsuitable for home use or commercial groundskeeping. (*Id.* at 36529.)

In developing a proposed definition of "farm equipment or vehicles" for this proposed rulemaking EPA used as guidance definitions of "agricultural field equipment" and "farmstead equipment" prepared by the Society of Automotive Engineers (SAE) and the American Society of Agricultural Engineers (ASAE). EPA's proposed definition of "farm equipment or vehicles" is based on the interpretation that farming, and therefore farm equipment, includes both production and/or harvesting. The proposed definition would include such activities as forestry, agriculture, horticulture, and aquaculture.

EPA has also consulted definitions of agriculture found in EPA and other Federal statutes and regulations. An EPA Federal Insecticide, Fungicide, and Rodenticide Act (FIFRA) regulation (40 CFR 171.2(a)(5)) regarding the certification of pesticide applicators defines "agricultural commodity" broadly. The FIFRA definition includes the same things as the proposed definition, including forestry. The United States Department of Agriculture ("USDA") Crop Insurance Act, 7 U.S.C. 1518, defined "agricultural commodity" to include forestry.

The last agricultural operation using farm equipment is harvesting. Harvesting is meant to include only those operations relating to actually gathering the crop at the site where it is grown. Such operations might include

cutting, trimming, separating, and baling. Additional processing after the crop has been harvested, such as freezing or canning, would not be harvesting.

EPA invites comment on this definition of farm equipment and vehicles.

D. Definition of "Construction Equipment"

EPA proposes that *construction equipment* means any internal combustion engine-powered machine primarily used on commercial construction sites.

Section 209(e)(1) prohibits states from adopting emission standards from "[n]ew engines which are used * * * construction equipment or vehicles and which are smaller than 175 horsepower." As with farm equipment, neither the Act nor the legislative history define or provide additional specificity related to this preemption.

Again, EPA reviewed the SAE definition of construction equipment in developing this proposed definition. EPA also consulted the Department of Commerce Standard Industrial Codes ("SIC"). Construction machines include both earthmoving and non-earthmoving equipment. The former are designed to move earth and other material and are often employed on projects such as roads, dams, open pit excavation, trenching and building sites. Loaders, graders, tractor-scrapers, and backhoe loaders are indicative of the equipment in this category. The non-earthmoving equipment are typically used on unimproved surfaces and include machines such as cranes, pavers, and rollers/compactors. (See SAE Recommended Practice J 1116, June 1986 for a more complete listing of machines.)

Mining machinery are less frequently involved in operations associated with building or assembling structures or use on road or dam projects. Instead, these machines are used in mining, excavation, tunneling, and for the removal, transport, and processing of ore, coal, earth and other mineral substances. Such machines include continuous miners, roof drills, cutting machines, loading machines, and rock dusting machines. Although the proposed definition is broad, EPA is proposing to exclude mining equipment for the following reasons. Both SAE and SIC have a separate category for mining equipment; these organizations considered mining sufficiently distinct not to include it as construction equipment. Further, as noted above, mining equipment is not usually associated with the activities generally considered as construction. For equipment that is used both for mining and construction, the "primary use" test discussed below will determine if the equipment may be considered "construction equipment or vehicle" under the definition. Nonetheless, EPA invites comment on whether mining equipment should be included in the construction equipment definition.

E. Definition of "Locomotive"

EPA is proposing a definition of *locomotive* based on the definition contained in a regulation promulgated under the Locomotive Inspection Act, 49 CFR 229.5(i). Please see the proposed definition later in this document.

F. Application/Scope of Definitions—"Used In"

Under EPA's proposed definitions of "farm equipment" and "construction equipment", many types of equipment will undoubtedly be used solely within the category and be preempted. There are, however, equipment types that are used for many applications, including farm or construction activities. For such "multiple use" equipment, EPA proposes a "primary use" test that assesses whether such equipment is primarily used as farm or construction equipment; if so, it will be considered farm or construction equipment, as defined.

The proposed rule states that if it is determined that the primary use of the equipment is in a preempted category the individual engine used in that piece of equipment will be preempted from state regulation. Similarly, if it is determined that the primary use of the equipment is not in a preempted category, then the individual engine used in that piece of equipment would then be subject to state regulation. In other words, once an equipment type has been judged farm or construction, no other judgments regarding the engine in that equipment need be made. For equipment which is determined to be other than farm or construction, however, its engine may be regulated by the state even if that engine is also used in a preempted class of equipment.

For example, a farm tractor would undoubtedly be judged to be a piece of farm equipment. Thus, any engine used in such tractor would be preempted from state regulations. Conversely, a lawn mower would more than likely not be farm or construction equipment and would not be preempted. Any engines used in lawnmowers would be subject to state regulation. For a multiple-use piece of equipment the determination is a bit more difficult but no less straightforward. Assume that, for example, after examination of sales data it was determined that chainsaws were not farm or construction equipment. Therefore, the engines used in chainsaws would not be preempted, and they would have to meet state regulations. Further assume that the engine used in one chainsaw was also used in a cutoff saw and that a cutoff saw had been judged to be construction equipment. The engine in the cutoff saw would be preempted from state regulation, notwithstanding that the same engine, used in a chainsaw, is not preempted. As these examples show, the determinant in each case is the type of equipment—not the various uses of an engine.

In determining "primary use", the individual manufacturer or a manufacturer's association would present national sales data to the California Air Resources Board (CARB) to show that an equipment type was or was not used in commercial farming or construction. When CARB requested EPA to authorize its proposed regulations, EPA would review California's decision regarding the primary use of particular equipment in commercial activities.

The key issue will be the number of units sold for each application. If 51 percent or more of the units sold in an equipment category went to farming applications, that category would be designated as primarily used in farming, and the engines installed would be preempted from state regulation. Similarly, if 51 percent or more of the units sold in another equipment category went to construction applications, that equipment category would be designated as primarily used in construction, and the engines used would be preempted. The limit could also be reached by adding farm and construction equipment sales together. If the sum was 51 percent or more that category would be farm and construction equipment and the engines used therein would be preempted.

EPA requests comments, with examples and possible suggestions, in cases in which a piece of equipment that appears clearly to be farm or construction equipment may not meet the 51 percent "primary use" test.

It is anticipated that the number of groups of equipment might be quite limited. Unless there was a very clear delineation, all similar pieces of equipment would remain together in one group rather than being split into sub-groups. For example, there would probably be just one group comprising lawnmowers rather than one group of mowers with engines from zero to two horsepower, another group with engines from two to four horsepower, and another group of mowers which are self-

propelled. EPA invites comment on whether sub-categories should be created for certain types of equipment.

G. Labeling Requirement

EPA proposes that engine manufacturers be required to label new engines which are used in construction equipment or vehicles or used in farm equipment or vehicles and which are smaller than 175 horsepower. The proposal requires that the label state which standard or standards, that is, Federal, California, or both, for which the engine is certified. The labeling requirement provides an enforcement mechanism for Federal or State authorities to ascertain if a piece of equipment contains the properly certified engine. For example an inspector could look at a piece of farm equipment to determine if the engine has been certified to meet Federal standards (states are preempted from setting standards for farm equipment). Or, if an inspector looked at a piece of equipment that was not preempted from state regulation, the engine could be labeled that it met a California standard only (if in California) or a Federal standard (if not used in California) or both California and Federal standards.

H. Authorization Criteria and Procedures

Section 209(e) preempts all states from adopting and enforcing emission standards and other requirements for specific categories of nonroad engines and vehicles. If certain criteria are met, EPA is required to "authorize" California to adopt standards for other categories of nonroad engines and vehicles. Other states may then adopt California standards if they comply with requirements enumerated in section 209(e). The concept of Congress providing a mechanism for California to adopt emission standards and enforcement procedures different from Federal standards and enforcement procedures is not new. EPA has been granting "waivers" of federal preemption for California for motor vehicle standards and enforcement procedures under section 209(b) of the Act since 1967. The criteria for section 209(b) and the new section 209(e) are similar. EPA believes it is appropriate to interpret the parallel language of sections 209 (b) and (e) consistently. EPA invites comment on the proposed interpretation.

In 1967, section 208 was added to the Clean Air Act. It expressly preempted states' authority to adopt or enforce emission standards for new motor vehicles. Paragraph (b), however, directed EPA to waive this preemption for California if certain criteria were met. (Pub. L. 90–148, section 2, 81 Stat. 485 (November 21, 1967).)

In 1970, Congress renumbered section 208 as section 209. (Pub. L. 91–604, section 8, 84 Stat. 1676 (December 31, 1979).) In 1977, Congress amended section 209(b) by deleting the requirement that individual state standards be at least as protective as the federal standards, requiring instead that the California standards be as protective "in the aggregate". (Pub. L. 95–95, section 207, 91 Stat. 685 (August 7, 1977).) Since the 1977 amendment, EPA has granted approximately forty waivers to California. In granting these waivers, EPA has interpreted the waiver criteria provided in section 209(b). (*See* 55 FR 43028, October 25, 1990). Section 209(e)(2) directs EPA to "authorize" California to adopt emission standards if certain criteria are met. These criteria are similar to section 209(b) and will be similarly interpreted. The differences and similarities are discussed below. EPA invites comment on its proposed interpretation of the criteria to be used in determining whether an authorization should be granted.

One difference between sections 209 (b) and (e) is the point at which EPA grants a waiver or authorizes California to adopt and enforce emission standards. Under section 209(b) CARB completes most of its regulatory process and adopts the proposed regulations before submitting a waiver request to EPA. Section 209(e), however, states, in pertinent part, that EPA shall "* * * authorize California to adopt and enforce * * *". EPA is interpreting this language to mean that for nonroad standards and other requirements relating to the control of emissions, California must request and receive authorization from EPA before adoption.

Given this interpretation, California submitted its first nonroad engine request for EPA authorization on December 27, 1990, for nonroad utility and lawn and garden engines. California awaits the regulation discussed in this proposal and, accordingly, EPA's authorization decision before it adopts its proposed regulations.

Both subsections 209 (b) and (e) requires that EPA provide notice and opportunity for hearing. Both require that California determine that its "* * * standards will be, in the aggregate, at least as protective of public health and welfare as applicable Federal standards."

Subsections (b) and (e) also state that no waiver or authorization shall be granted if the Administrator of EPA finds that any one of three conditions exist. First, no waiver or authorization shall be granted if California's above-mentioned determination is arbitrary and capricious. Second, no waiver or authorization shall be granted if California does not need such standards to meet compelling and extraordinary conditions. EPA has applied these two criteria in motor vehicles and proposes to apply the criteria the same way in the authorization of nonroad vehicle and engine standards.

The language in subsections (b) and (e) differs for the third criterion. Section 209(b) states that no waiver shall be granted if "such State standards and accompanying enforcement procedures are not consistent with section 202(a) of this part." Section 209(e), on the other hand, states that no such authorization shall be granted if "California standards and accompanying enforcement procedures are not consistent with this section."

Under the section 209(b) interpretation, California standards and enforcement procedures are inconsistent with section 202(a) if there is adequate lead time to permit development of the necessary technology, given the cost of compliance within that time period, or if the Federal and State test procedures impose inconsistent certification requirements. While section 209(b) refers to section 202(a), the language in section 209(e) refers to "this section" rather than to another section. EPA proposes an interpretation of this language that is different from the consistency criterion in section 209(b). "This section" is literally section 209. For California standards and accompanying enforcement procedures to be consistent with section 209, EPA proposes that the following criteria would have to be met. First, the California standards and enforcement procedures must be consistent with section 209(a), which prohibits states from adopting or enforcing emission standards for new motor vehicles or engines. That is, California's proposed nonroad standards and enforcement procedures must not apply to new motor vehicles or new motor vehicle engines. Second, California's proposed nonroad regulations must be consistent with section 209(e)(1), which identifies the categories preempted from state regulation. Thus, California's proposed emission regulations would be considered inconsistent if they applied to the preempted categories. EPA invites comment on this proposed interpretation of section 209(e)(2)(A)(iii).

I. State Adoption of California Standards

Section 209(e)(2)(B) provides the opportunity for states to adopt and enforce California's nonroad standards and other requirements under certain circumstances. This provision is similar to section 177, which provides the opportunity for states to adopt and enforce California standards for motor vehicles and take other actions referred to in section 209(a). EPA proposes to interpret this provision consistently with its interpretation of section 177 to the extent the sections are similar. Both section 177 and section 209(e) require that only states "with plan provisions approved under part D of title I" may adopt California standards. EPA proposes to interpret this to mean that some portion of a state's plan must be approved by EPA.

Section 209(e)(2)(B) says that any state may adopt and enforce standards "and take such other actions as are referred to in subparagraph (A) of this paragraph respecting such vehicles or engines." EPA believes that "other actions" refers to the language in subparagraph (A) that says that EPA shall authorize California to adopt and enforce standards "* * * and other requirements relating to the control of emissions * * *". These "other requirements" that California may adopt (and that states may in turn adopt as "other actions") are requirements that are not "standards" or "enforcement procedures" as interpreted in section 209(b) waiver decisions in accordance with *Motor and Equipment Manufacturers Association, Inc.* v. *Environmental Protection Agency*, 627 F.2d 1095 (D.C. Cir. 1979), *cert. denied* 446 U.S. 952 (1980) ("*MEMA I*"). They are thus referred to as approvals relating to the control of emissions as conditions precedent to the initial retail sale, titling, or registration of engines or equipment. (See Section 209(a)) Examples of such motor vehicle requirements are tune-up labeling requirements and certification fees.

Under section 209(e)(2)(B), states must meet two criteria in order to adopt California standards. The first is that the state standards be identical to the California standards authorized by EPA under section 209(e)(2)(A). Further, the regulations governing the activities which put the standards into effect and the enforcement activities must be the same in all material respects to the California regulations. (Section 177 requires only that state standards be identical to California.) The second criterion is that California and the adopting state adopt the standards at least two years before commencement of the period for which the standards take effect.

III. Public Participation

A. Comments and the Public Docket

EPA requests comments on any aspect of this proposed rulemaking. Persons making comments are especially encouraged to provide suggestions for modification of any aspects of the proposal that they find objectionable. All comments should be directed to the Air Docket, Docket No. A-91-18 (see "ADDRESSES").

Persons with comments containing proprietary information must distinguish such information from other comments to the greatest possible extent and label it as "Confidential Business Information." To ensure that proprietary information is not inadvertently placed in the docket, submissions containing such information should be sent directly to the contact person listed above and not to the public docket. If a person making comments wants EPA to base the final rule in part on a submission labeled as confidential business information, then a non-confidential version of the document which summarizes the key data or information should be placed in the public docket. Information covered by a claim of confidentiality will be disclosed by EPA only to the extent allowed by the procedures set forth in 40 CFR part 2. If no claim of confidentiality accompanies the submission when it is received by EPA, it may be made available to the public without further notice to the person making comments.

B. Public Participation

Any person desiring to present testimony regarding this proposal at the public hearing (see "Dates") should, if possible, notify the contact person listed above of such intent at least seven days prior to the opening day of the hearing. The contact person should also be given notification of any need for audio/visual equipment. A sign-up sheet will be available at the registration table the morning of the hearing for scheduling testimony for those who have not notified the contact person. This testimony will be scheduled on a first come, first serve basis to follow the previously scheduled testimony.

EPA suggests that approximately 50 copies of the statement or material to be presented be brought to the hearing for distribution to the audience. In addition, EPA would find it helpful to receive an advance copy of any statement or material to be presented at the hearing at least one week before the scheduled hearing date, in order to give EPA staff adequate time to review such material before the hearing. Such advance copies should be submitted to the contact person listed previously.

The official records of the hearing will be kept open for 30 days following the hearing to allow submission of rebuttal and supplementary testimony. All such submittals should be directed to the Air Docket, Docket No. A-91-18 (see "Addresses").

Mr. Charles N. Freed, Director of the Manufacturers Operations Division, Office of Mobile Sources, is hereby designated Presiding Officer of the hearing. The hearing will be conducted informally and technical rules of evidence will not apply. A written transcript of the hearing will be placed in the above docket for review. Anyone desiring to purchase a copy of the transcript should make individual arrangements with the court reporter recording the proceeding. The Presiding Officer is authorized to strike from the record statements which he deems irrelevant or repetitious and to impose reasonable limits on the duration of the statement of any witness.

IV. Other Statutory Requirements

A. Executive Order 12291

Under Executive Order 12291, EPA must judge whether a regulation is "major" and, therefore, subject to the requirement that a Regulatory Impact Analysis (RIA) be prepared. The Agency has determined that this regulation is not "major" because it does not meet any of the criteria set forth and defined in section 1(b) of the Order.

Also, in accordance with Executive Order 12291, the proposed rule was submitted to the Office of Management and Budget (OMB) for review. Any written comments are in the public docket for this rulemaking.

B. Paperwork Reduction Act

This proposed rule does not contain any additional information collection requirements subject to OMB review under the Paperwork Reduction Act of 1980, 44 U.S.C. 3501 *et seq.*

C. Regulatory Flexibility Act

The Regulatory Flexibility Act of 1980 required federal agencies to identify potentially adverse impacts of federal regulations upon small entities. In instances where significant impacts are possible on a substantial number of small entities, agencies are required to perform a Regulatory Flexibility Analysis (RFA). EPA has determined that the regulations proposed today would not have a significant impact on a

substantial number of small entities. This regulation would affect manufacturers of nonroad vehicles and nonroad vehicle engines, a group which does not contain a substantial number of small entities.

Therefore, as required under section 605 of the Regulatory Flexibility Act, 5 U.S.C. 601 *et seq.* I certify that this regulation does not have a significant impact on a substantial number of small entities.

Dated: August 28, 1991.

William K. Reilly,

Administrator.

List of Subjects for 40 CFR Part 85

Imports, Labeling, Motor vehicle pollution, Reporting and recordkeeping requirements, Research, and Warranties.

Therefore, it is proposed that 40 CFR part 85 be amended as follows:

PART 85—CONTROL OF AIR POLLUTION FROM MOTOR VEHICLES AND MOTOR VEHICLE ENGINES

1. The authority citation for part 85 continues to read as follows:

Authority: Secs. 202, 208, and 301(a), Clean Air Act, as amended (42 U.S.C. 7521, 7542, and 7601(a)).

2. Part 85 is amended by adding subpart Q to read as follows:

Subpart Q—Preemption of State Standards and Waiver Procedures for Nonroad Engines and Nonroad Vehicles

Sec.
85.1601 Applicability.
85.1602 Definitions.
85.1603 Application of definitions; scope of preemption.
85.1604 Labeling Requirement.
85.1605 Procedures for California nonroad waiver requests.
85.1606 Criteria for granting authorization.
85.1607 Adoption of California standards by other states.

Subpart Q—Preemption of State Standards and Waiver Procedures for Nonroad Engines and Nonroad Vehicles

§ 85.1601 Applicability.

The requirements of this subpart are applicable to nonroad engines and nonroad vehicles.

§ 85.1602 Definitions.

As used in this subpart, all terms not defined shall have the meaning given them in the Clean Air Act, as amended.

Construction equipment or vehicle means any internal combustion engine-powered machine primarily used on commercial construction sites. Primarily used means 51 percent or more.

Farm equipment or vehicle means any internal combustion engine-powered machine primarily used in the commercial production and harvesting of food, fiber, wood, or commercial organic products. Primarily used means 51 percent or more.

Locomotive means a self-propelled piece of on-track equipment (other than equipment designed for operation both on highways and rails, specialized maintenance equipment, and other similar equipment) designed for moving other equipment or carrying freight or passenger traffic or both.

New engine means a nonroad vehicle or engine the equitable or legal title to which has never been transferred to an ultimate purchaser. With respect to imported nonroad vehicles or engines, or nonroad vehicles or engines offered for importation such terms mean a nonroad vehicle or engine, respectively, manufactured after the effective date of a regulation issued under section 213 which is applicable to such vehicle or engine (or which would be applicable to such vehicle or engine had it been manufactured for importation into the United States).

Ultimate purchaser means, with respect to any new nonroad vehicle or new nonroad engine, the first person who in good faith purchases such new nonroad vehicle or new nonroad engine for purposes other than resale.

§ 85.1603 Application of definitions; Scope of preemption.

(a) For equipment that is used in applications in addition to farming or construction activities, if the equipment is primarily used as farm or construction equipment or vehicles, as defined in this subpart, it is considered farm or construction equipment or vehicles. Primarily used means 51 percent or more.

(b) Engines, when used in farm or construction equipment or vehicles smaller than 175 horsepower, as defined in this subpart, are preempted from state adoption or enforcement of standards or other requirements relating to the control of emissions.

§ 85.1604 Labeling Requirement.

(a) The engine manufacturer shall label new engines which are used in construction equipment or vehicles or used in farm equipment or vehicles and which are smaller than 175 horsepower.

(b) The label shall state which standard or standards (Federal, California, or both) for which the engine is certified.

§ 85.1605 Procedures for California nonroad authorization requests.

(a) California shall request authorization to adopt and enforce standards and other requirements relating to the control of emissions from nonroad vehicles or engines from the Administrator of EPA and provide the record on which the state rulemaking was based.

(b) After receipt of the authorization request, the Administrator shall provide notice and opportunity for a public hearing regarding such requests in accordance with the Administrative Procedure Act.

§ 85.1606 Criteria for granting authorization.

(a) The Administrator shall grant the authorization if California determines that California standards will be, in the aggregate, at least as protective of public health and welfare as applicable Federal standards.

(b) The authorization shall not be granted if the Administrator finds that:

(1) the determination of California is arbitrary and capricious;

(2) California does not need such California standards to meet compelling and extraordinary conditions, or

(3) California standards and accompanying enforcement procedures are not consistent with section 209.

§ 85.1607 Adoption of California standards by other states.

(a) Any state other than California which has plan provisions approved under Part D of Title I may adopt and enforce emission standards, for any period, for nonroad vehicles or engines subject to the following requirements:

(1) The state must provide notice to the Administrator that it intends to adopt such standards.

(2) Such standards shall not apply to:

(i) new engines which are used in construction equipment or vehicles or used in farm equipment or vehicles and which are smaller than 175 horsepower;

(ii) new locomotives or new engines used in locomotives.

(3) Such standards and implementation and enforcement shall be identical to the California standards authorized by the Administrator and implementation and enforcement for each period.

(4) The state shall adopt such standards at least two years before commencement of the period for which the standards take effect.

(5) California shall have adopted such standards two years before commencement of the period for which the standards take effect in the state that is adopting under section 209(e)(2)(B).

(b) Reserved.

[FR Doc. 91-21256 Filed 9-5-91; 8:45 am]
BILLING CODE 6560-50-M

ENVIRONMENTAL PROTECTION AGENCY

[FRL-3990-9]

California State Nonroad Engine and Vehicle Pollution Control Standards; Authorization of State Standards; Proposed Decision of the Administrator; Opportunity for Public Hearing

AGENCY: Environmental Protection Agency (EPA).

ACTION: Notice of an opportunity for public hearing.

SUMMARY: The California Air Resources Board (CARB or California) notified EPA in a December 1990 letter that it has approved for adoption regulations for exhaust emission standards and test procedures for utility and lawn and garden equipment engines for 1994 and subsequent calendar years. In approving the regulations for adoption, CARB delegated authority to the Executive Officer to adopt the regulations after EPA authorization. CARB has requested that EPA authorize CARB to adopt the regulations pursuant to section 209(e) of the Clean Air Act (Act), as amended, 42 U.S.C. 7543. This notice announces that EPA will conduct a public hearing to consider CARB's request and to hear comments from interested parties regarding CARB's proposed regulations. This hearing will be held in conjunction with a hearing on a Notice of Proposed Rulemaking under section 209(e) of the Act.

DATES: EPA will conduct a public hearing on this Proposed Authorization Decision from 9 a.m. until 5 p.m. on September 20, 1991, in Washington, DC. Written comments on this proposed decision will be accepted for 30 days following the hearing, until October 21, 1991.

ADDRESSES: The public hearing will be held in the Captain's Room of the Channel Inn Hotel, 650 Water Street, SW., (corner of 7th and Maine), Washington, DC. Copies of material relevant to the authorization request (Docket A-91-01) will be available for public inspection during the working hours of 8:30 a.m. to 12 p.m. and 1:30 p.m. to 3:30 p.m., Monday through Friday, at: U.S. Environmental Protection Agency, Air Docket (LE-131), room M1500, First Floor Waterside Mall, 401 M Street, SW., Washington, DC 20460 (Telephone (202) 260-7548). A reasonable fee will be charged by EPA for copying docket materials.

FOR FURTHER INFORMATION CONTACT: Janice Raburn, Attorney/Advisor, Manufacturers Operations Division (EN-340F), U.S. Environmental Protection Agency, Washington, DC 20460, Telephone: (202) 260-8657.

SUPPLEMENTARY INFORMATION:

I. Background and Discussion

EPA is holding a public hearing to consider a Notice of Proposed Rulemaking (NPRM) under section 209(e) and will at this same hearing take comment on California's request for authorization to adopt regulations for exhaust emission standards and test procedures for utility and lawn and garden equipment engines for 1994 and subsequent calendar years. Because this is the first authorization request pursuant to section 209(e), EPA is publishing a Proposed Authorization Decision that implements the NPRM. An opportunity for a hearing is being provided for interested parties to provide alternative views and comments on these views that EPA may consider in the Final Rule and Final Authorization Decision. Interested parties are also requested to comment on California's request regarding the following issues:

(1) Whether California's determination that the California standards are, in the aggregate, at least as protective of public health and welfare as applicable Federal standards is arbitrary and capricious;

(2) Whether California needs its standards to meet compelling and extraordinary conditions; and

(3) Whether California's standards and accompanying enforcement procedures satisfy the consistency criterion of section 209(e)(2)(A)(iii) of the Act.

II. Proposed Authorization Decision

1. Introduction

By this decision, issued under section 209(e) of the Clean Air Act (the Act), as amended, 42 U.S.C. 7543, I am authorizing the State of California to adopt and enforce regulations for standards and test procedures for utility and lawn and garden engines as requested. These regulations establish exhaust emission standards and test procedures for 1994 and subsequent calendar year utility and lawn and garden equipment engines.[1]

Section 209 of the Act addresses nonroad engines. The request before me applies to engines 25 horsepower or smaller. Because equipment that uses such engines includes hand-held and portable pieces of equipment, clearly nonstationary sources, such engines are clearly nonroad engines. Thus, it is appropriate that I consider for authorization under section 209 California's proposed standards and test procedures for utility and lawn and garden engines.

Section 209(e)(1) of the Act provides:

> No State or any political subdivision thereof shall adopt or attempt to enforce any standard or other requirement relating to the control of emissions from either of the following new nonroad engines or nonroad vehicles subject to regulation under this Act—
>
> (A) New engines which are used in construction equipment or vehicles or used in farm equipment or vehicles and which are smaller than 175 horsepower.
>
> (B) New locomotives or new engines used in locomotives. Subsection (b) shall not apply for purposes of this paragraph.

Section 209(e)(2) addresses nonroad engines and vehicles other than those referred to in section 209(e)(1). For these other engines and vehicles, section 209(e)(2) requires the Administrator, after notice and opportunity for public hearing, to authorize California to adopt and enforce standards and other requirements relating to emissions control if California determines that its standards will be, in the aggregate, at least as protective of public health and welfare as applicable Federal standards. The authorization shall not be granted, however, if the Administrator finds that: (1) The determination of California is arbitrary and capricious; (2) California does not need the California standards to meet compelling and extraordinary conditions; or (3) California standards and accompanying enforcement procedures are not consistent with section 209.

In order to be deemed consistent with section 209, California standards and enforcement procedures must reflect the requirements of section 209(a) and 209(e)(1). Section 209(a) prohibits states from adopting or enforcing emission standards for new motor vehicles or engines. Therefore, California's proposed nonroad standards and enforcement procedures must not apply to new motor vehicles or new motor vehicle engines. Section 209(e)(1) identifies the categories preempted from state regulation. As stated above, the preempted categories are (a) new engines which are used in construction equipment or vehicles or used in farm equipment or vehicles and which are smaller than 175 horsepower, and (b) new locomotives or new engines used in locomotives. Therefore, California's proposed emission regulations would be considered inconsistent if they applied

[1] *See* Title 13, California Code of Regulations (CCR), sections 2400-2407.

to these preempted categories, as defined by EPA regulation.

California has requested that I authorize it to adopt regulations for emission standards and test procedures for 1994 and subsequent calendar year utility and lawn and garden equipment engines. On the basis of the record before me, I cannot make the findings required to deny authorization under section 209(e)(2) of the Act. Therefore, I am authorizing California to adopt these regulations.

2. Background

By letter dated December 27, 1990, the California Air Resources Board (CARB) submitted to the U.S. Environmental Protection Agency (EPA) a request that EPA authorize California to adopt regulations for standards and test procedures for 1994 and subsequent calendar year utility and lawn and garden engines and vehicles. There are two categories of utility engines: the lawn and garden category and the general utility category.

These proposed standards apply to gasoline, diesel, and other fueled engines 25 horsepower or smaller. The standards become effective calendar year 1994, with a new set of standards effective calendar year 1999. CARB agreed to revisit the proposed 1999 standards in 1994 and 1996 to evaluate the development of technology to meet the standards. To ensure an emissions benefit from the engines that are replaced in late model utility engine equipment, the proposed regulation requires that, as of 1999, replacement engines for pre-1994 equipment comply with the 1994 model emission regulations. Compliance is based on date of production, not date of sale. The standards, in grams per brake-horsepower-hour (g/bhp-hr) are divided into subcategories based on total engine displacement. Separate standards are proposed for hand-held equipment.

The proposed regulations incorporate much of the SAE J1088 test procedure as the engine test procedure for general utility engines. CARB intends to change the SAE test procedure, however, by using two separate test cycles: One for hand-held equipment engines and one for non hand-held equipment engines. Under the proposed regulations, the primary test procedure is the raw gas method (RGM). The Constant Volume Sampling Test Procedure (CVS) test method or a derivative of it called the "mini-CVS" test method is proposed for compliance with the proposed PM standards. The CARB staff believes that an accurate PM measurement cannot be made using the RGM which is presently specified by SAE J1088. Additionally, manufacturers may use CVS equipment to measure all emissions for any engine if the manufacturer provides test data showing the CVS results to be equivalent to the RGM test results and the procedure is approved by the Executive Officer.

California's proposed regulations will require certification of engines, assembly line testing, labeling of equipment, and a warranty requirement. Manufacturers of new utility or lawn and garden engines subject to the standards would be required to certify the engines annually. After the first certification, additional certification data would only be needed whenever design changes to the engine are made, or when new emission standards take effect.

CARB's proposed regulation requires manufacturers to conduct assembly line "quality audit" testing to demonstrate compliance with the standards, beginning with production of 1995 models. The manufacturer would select, at random, one percent of the engines produced for sale in California for "quality audit" testing at the manufacturer's facility using the same test procedures as those used in certification. The procedures allow for reduced testing when emission levels pass a statistical point that proves that engine emissions are well below the standard. The proposed regulation offers an option for manufacturers to develop their own quality-audit procedures that would be subject to approval by the Executive Officer.

Confirmatory testing is also proposed in the regulation. Under this scheme, CARB reserves the right to test a small sample of new utility engines produced for sale in California to determine if the average emissions of any pollutant from the sample of engines, as determined by a statistical sampling procedure, fail to meet the applicable emission standards. These tests, done at the manufacturer's expense, would be conducted by CARB, its contractor, or by the manufacturer at its own facility. If the tests show that the average emissions fail to meet the applicable standards, the manufacturer could be fined and enjoined from selling that engine family in California.

CARB's proposed regulation requires that each new utility engine be affixed with a label that identifies it as a California-certified engine and states that it conforms to all applicable California utility engine emission regulations. The labeling requirement would ensure that only California-certified engines be offered for sale in the state.

The proposed regulation requires that, beginning with 1994, the manufacturer provide a two year emissions warranty to the ultimate purchaser. The warranty would be required to ensure that the engine is free from defects of any listed emissions-related part. The warranty would not cover the basic engine with respect to wear or failure.

3. Standard of Proof

Section 209(a) of the Act expressly preempts states' authority to adopt or enforce emission standards for new motor vehicles. In section 209(b), however, Congress provided a mechanism for California to adopt its own emission standards and enforcement procedures for motor vehicles. EPA has been granting waivers of Federal preemption for California for motor engines and vehicles under section 209(b) since 1967. Section 209(e), added in the Clean Air Act Amendments of 1990, contains criteria similar to section 209(b). EPA believes it is appropriate to interpret the parallel language of these two sections consistently. The courts have provided guidance for the standard of review appropriate for section 209(b) waiver decisions.

In *MEMA I*, the court set out clearly the role of the Administrator in a section 209 proceeding. This role is to:

(C)onsider all evidence that passes the threshold test of materiality and * * * thereafter assess such material evidence against a standard of proof to determine whether the parties favoring denial of the waiver have shown that the factual circumstances exist in which Congress intended denial of the waiver.[2] The court in *MEMA I* considered the standards of proof appropriate for the findings under section 209 necessary to grant a waiver for an "accompanying enforcement procedure": the "protectiveness in the aggregate" and "consistency with section 202(a)" findings. The court instructed:

> The standard of proof must take account of the nature of the risk of error involved in any given decision, and it therefore varies with the finding involved. We need not decide how this standard operates in every waiver decision.[3]

The court upheld the Administrator's finding that, to deny a waiver, "there must be 'clear and compelling evidence' to show that the proposed procedures undermine the protectiveness of California's standards." The court noted that this standard of proof "also accords with the Congressional intent to provide California with the broadest possible

[2] *MEMA I*, 627 F.2d 1095, 1122 (D.C. Cir. 1979).
[3] *Id.*

discretion in setting regulations it finds protective of the public health and welfare * * *".[4]

With respect to the consistency finding, the court did not articulate a standard of proof applicable to all proceedings, but found that opponents of the waiver were unable to meet their burden even if the standards were a mere preponderance of the evidence. Although *MEMA I* did not explicitly consider the standard of proof under section 209 in connection with a waiver request for "standards", there is nothing in the opinion to suggest that the court's analysis would not apply with equal force to such determinations.

EPA's past waiver decisions have consistently made clear that:

> Even in the two areas concededly reserved for Federal judgment by this legislation—the existence of "compelling and extraordinary" conditions and whether the standards are technologically feasible—Congress intended that the standard of EPA review of the State decision be a narrow one.[5]

Congress' intent that the EPA review of California's decision-making be narrow has led EPA in the past to reject arguments that are not specified as grounds for denying a waiver:

> The law makes it clear that the waiver requests cannot be denied unless the specific findings designated in the statute can properly be made. The issue of whether a proposed California requirement is likely to result in only marginal improvement in air quality not commensurate with its cost or is otherwise an arguably unwise exercise of regulatory power is not legally pertinent to my decision under section 209".[6]

Thus, because I believe that *MEMA I* is applicable to section 209(e), my consideration of all the evidence submitted in connection with this authorization decision is circumscribed by its relevance to those questions which I may consider under section 209.

Finally, it is important to remember that the burden of proof in a section 209 proceeding is squarely upon the opponents of the waiver:

> The language of the statute and its legislative history indicate that California's regulations, and California's determination that they comply with the statute, when presented to the Administrator are presumed to satisfy the waiver requirements and that the burden of proving otherwise is on whoever attacks them. California must present its regulations and findings at the hearing and thereafter the parties opposing the waiver request bear the burden of persuading the Administrator that the waiver request should be denied.[7]

4. Discussion

A. Public Health and Welfare

I have already set forth, in the introduction of this decision, the criteria for review of the public health and welfare protectiveness issue as it pertains to both emission standards and accompanying enforcement procedures for which California requests a waiver.

CARB has made a determination that its proposed standards are, in the aggregate, at least as protective of public health and welfare as applicable Federal standards.[8] I cannot find that this determination is arbitrary and capricious because there are no Federal standards for utility and lawn and garden engines. Pursuant to section 213 of the Act the Administrator will "conduct a study of emissions from nonroad engines and nonroad vehicles to determine if such emissions cause, or significantly contribute to, air pollution which may reasonably be anticipated to endanger public health or welfare." If the Administrator determines that nonroad emissions are "significant contributors" in more than one ozone or carbon monoxide nonattainment area, the Administrator shall promulgate standards for such nonroad engines. If EPA makes such a determination and promulgates standards that are more stringent "in the aggregate" than CARB standards, upon promulgation of the final rule by EPA, interested parties may request that EPA reconsider this waiver decision to apply the "in the aggregate" criterion.

B. Compelling and Extraordinary Conditions

Under section 209(e)(2)(A)(ii) I cannot grant this authorization if I find that California "does not need such State standards to meet compelling and extraordinary conditions * * *". This criterion also applies to motor vehicles in section 209(b)(1)(B). I propose to interpret this criterion the same in this nonroad engine and vehicle authorization request as I have interpreted the criterion in motor vehicle waiver decisions.

Under this criterion, EPA's inquiry is restricted to whether California needs its own nonroad engine and vehicle control program to meet compelling and extraordinary conditions, and not whether any given standards are necessary to meet such conditions.[9] As to the need for the particular standards which are the subject of this decision, California is entrusted with the power to select "the best means to protect the health of its citizens and the public welfare." [10] CARB has repeatedly demonstrated the existence of compelling and extraordinary conditions in California justifying California's need for its own motor vehicle pollution control program.[11] In CARB's December 1990 letter requesting authorization, CARB refers to the California Clean Air Act of 1988, in which the California Legislature found that the conditions "throughout California have the potential not only to prevent attainment of the state standards, but in some cases, to result in worsening of air quality." [12] Recognizing the severe air quality problems in California, the California Legislature authorized CARB to consider adopting standards and regulations for utility engines. Based on previous showings by California in the context of motor vehicle waivers and CARB's submission to the record I agree that California continues to face the requisite compelling and extraordinary conditions. Thus, I cannot deny the authorization request on the basis of a lack of compelling and extraordinary conditions.

C. Consistency with Section 209

Under section 209(e)(2)(B)(iii), I cannot grant California its authorization request if I find that California standards and accompanying enforcement procedures are not consistent with section 209 of the Act. California's standards and accompanying enforcement procedures are not consistent with section 209 of the Act. California's standards and accompanying enforcement procedures are not consistent with section 209 if the following criteria are not met. First, the California standards and enforcement procedures must be consistent with section 209(a), which prohibits states from adopting or enforcing emission standards for new motor vehicles or engines. That is, California's proposed nonroad standards and enforcement procedures must not apply to new motor

---

[4] *Id.*

[5] 40 FR 23102, 23103, (May 28, 1975).

[6] 36 FR 17458 (August 31, 1971). Note that the "more stringent" standard expressed here, in 1971, was superseded by the 1977 amendments to section 209, which established that the California standards must be, in the aggregate, at least as protective of public health and welfare as applicable Federal standards.

See also MEMA I, 627 F.2d at 1116–17 (holding that EPA properly declined to consider the alleged anti-competitive effects of California's in-use maintenance regulations).

[7] *MEMA I*, 627 F.2d at 1121.

[8] CARB Resolution 90–80, at page 3, (December 13, 1990).

[9] *See, e.g.* 49 FR 18887, 18889–90 (May 31, 1984).

[10] H.R. Rep. No. 95–294, 95th Cong., 1st Sess., 301 02 (1977).

[11] *See, e.g.*, 49 FR 18887, 18890–91 (May 31, 1984).

[12] Letter dated December 27, 1990, from James D. Boyd, Executive Officer, CARB, to William K. Reilly, Administrator, EPA, at page 7.

vehicles or new motor vehicle engines. Second, California's proposed nonroad regulations must be consistent with section 209(e)(1), which identifies the categories preempted from state regulation. Thus, California's proposed regulations would be considered inconsistent if they applied to the preempted categories in section 209(e)(1) as defined by EPA regulation.

California's proposed regulations apply to utility and lawn and garden engines. The proposed regulations do not apply to new motor vehicles or new motor vehicle engines.Thus, the first criterion is met.

In order to meet the second criterion, California's proposed regulations may not apply to the preempted categories under section 209(e)(1). CARB's proposed definition of "lawn and garden and utility engines" states:

> All engines and equipment that fall within the scope of the preemption of section 209(e)(1)(A) of the Federal Clean Air Act, as amended, and as defined by regulation of the Environmental protection Agency, are specifically not included within this category.

EPA is in the process of promulgating regulations to implement section 209(e); the proposed regulations define the preempted categories. EPA proposes in the rule that CARB make determinations regarding the primary use of utility and lawn and garden equipment to ascertain if such equipment falls within the scope of EPA's proposed definitions of "farm equipment" and "construction equipment". EPA will then review CARB's determination to determine if it was arbitrary and capricious.

For this proposed waiver decision, EPA presumes that CARB will apply the tests in the EPA regulation and make a determination that meets the arbitrary and capricious standard of review. When CARB presents its determination of primary use in accordance with EPA's proposed test to EPA, EPA will then provide an opportunity for interested parties to comment on CARB's determination in the context of EPA's review of such determination. When EPA prepares the final waiver decision, however, it will not be based on a presumption but on EPA's analysis of CARB's actual determination and any comments EPA receives regarding CARB's determination.

5. Decision

Based upon the above discussion and findings, I authorize the state of California to adopt California Exhaust Emission Standards and Test Procedures for 1994 and Subsequent Model Utility and Lawn and Garden Equipment Engines.

III. Procedures for Public Participation

Any person desiring to present testimony regarding this proposed decision at the public hearing (see "Dates") should, if possible, notify the contact person listed above of such intent at least seven days prior to the opening day of the hearing. The contact person should also be given notification of any need for audio/visual equipment. A sign-up sheet will be available at the registration table the morning of the hearing for scheduling testimony for those who have not notified the contact person. This testimony will be scheduled on a first come, first serve basis to follow the previously scheduled testimony.

EPA suggests that approximately 50 copies of the statement or material to be presented be brought to the hearing for distribution to the audience. in addition, EPA would find it helpful to receive an advance copy of any statement or material to be presented at the hearing at least one week before the scheduled hearing date, in order to give EPA staff adequate time to review such material before the hearing. Such advance copies should be submitted to the contact person listed previously.

The official records of the hearing will be kept open for 30 days following the hearing to allow submission of rebuttal and supplementary testimony. All such submittals should be directed to the Air Docket, Docket No. A-91-01 (see **"ADDRESSES"**).

Mr. Charles N. Freed, Director of the Manufacturers Operations Division, Office of Mobile Sources, is hereby designated Presiding Officer of the hearing. The hearing will be conducted informally and technical rules of evidence will not apply. A written transcript of the hearing will be placed in the above docket for review. Anyone desiring to purchase a copy of the transcript should make individual arrangements with the court reporter recording the proceeding. The Presiding Officer is authorized to strike from the record statements which he deems irrelevant or repetitious and to impose reasonable limits on the duration of the statement of any witness. The Administrator will base his determination with regard to CARB's request on the record of the public hearing, if any, and on any other relevant written submissions and other pertinent information. This information will be available for public inspection at the EPA Air Docket, Docket No. A-91-01 (see **"ADDRESSES"**).

Dated: August 22, 1991.

Michael Shapiro,

Acting Assistant Administrator for Air and Radiation.

[FR Doc. 91-21257 Filed 9-5-91; 8:45 am]

BILLING CODE 6560-50-M

federal register

Friday
September 6, 1991

Part XIII

The President

Proclamation 6330—Citizenship Day and Constitution Week, 1991

Federal Register
Vol. 56, No. 173
Friday, September 6, 1991

Presidential Documents

Title 3—

The President

Proclamation 6330 of September 4, 1991

Citizenship Day and Constitution Week, 1991

By the President of the United States of America

A Proclamation

After receiving word in London of our Constitution and its approval by the Congress of the Confederation, John Adams wrote that the document was, "if not the greatest exertion of human understanding, the greatest single effort of national deliberation that the world has ever seen." When they adopted the first 10 Amendments to our Constitution, our Nation's Founders added to that great charter of American government a set of clear, concise, and express guarantees of the fundamental rights of individuals. Known collectively as our Bill of Rights, these 10 amendments have helped to define and to defend our liberties. They have also served as a model for the world. During this 200th anniversary of our Bill of Rights, we do well to reflect on the timeless principles that it enshrines and on our role in upholding them.

The Bill of Rights guarantees, among other basic liberties, freedom of religion and of assembly, as well as freedom of speech and of the press; it protects the right to keep and bear arms; it prohibits unreasonable searches and seizures; and it ensures that no person shall be deprived of life, liberty, or property without due process of law. It also defines basic rules of fairness in criminal procedure. Ratified in 1791, the Bill of Rights makes clear that our Constitution is a charter of limited government based on the principles of federalism. Together these documents express in law our Nation's commitment to the truths first affirmed in our Declaration of Independence: "that all men are created equal, that they are endowed by their Creator with certain unalienable Rights, that among these are Life, Liberty and the pursuit of Happiness."

Our observance of Citizenship Day and Constitution Week reminds us that we have not only many rights but also many responsibilities as citizens of this great Nation. With characteristic eloquence and sagacity, the celebrated American jurist Learned Hand once said: "Liberty lies in the hearts of men and women. When it dies there, no constitution, no law, no court can save it." His words are a stirring reminder that our Constitution and Bill of Rights can be effective guarantees of freedom only as long as we understand and prize the principles that they enshrine. Accordingly, each of us has a responsibility to uphold the ideals of tolerance and justice; to teach our children the difference between liberty and license; and to share in the hard work of freedom—at the ballot box, in the workplace, on the farm, in the military, or through our homes, schools, and places of worship. This is the essence of good citizenship.

The Congress, by joint resolution of February 29, 1952 (36 U.S.C. 153), designated September 17 as "Citizenship Day." Also, by joint resolution of August 2, 1956 (36 U.S.C. 159), the Congress designated the week beginning September 17 and ending September 23 of each year as "Constitution Week."

NOW, THEREFORE, I, GEORGE BUSH, President of the United States of America, do hereby proclaim September 17, 1991, as Citizenship Day and call on government officials to display the flag of the United States on all government buildings. I encourage Federal, State, and local officials, as well as leaders of civic, social, and educational organizations, to conduct ceremonies and programs to commemorate the occasion.

Furthermore, I proclaim the week beginning September 17 and ending September 23, 1991, as Constitution Week, and I encourage all Americans to observe that week with appropriate ceremonies and activities.

IN WITNESS WHEREOF, I have hereunto set my hand this fourth day of September, in the year of our Lord nineteen hundred and ninety-one, and of the Independence of the United States of America the two hundred and sixteenth.

George Bush

[FR Doc. 91-21612
Filed 9-5-91; 10:39 am]
Billing code 3195-01-M

Reader Aids

Federal Register

Vol. 56 No. 173

Friday, September 6, 1991

INFORMATION AND ASSISTANCE

Federal Register

Index, finding aids & general information	523-5227
Public inspection desk	523-5215
Corrections to published documents	523-5237
Document drafting information	523-5237
Machine readable documents	523-3447

Code of Federal Regulations

Index, finding aids & general information	523-5227
Printing schedules	523-3419

Laws

Public Laws Update Service (numbers, dates, etc.)	523-6641
Additional information	523-5230

Presidential Documents

Executive orders and proclamations	523-5230
Public Papers of the Presidents	523-5230
Weekly Compilation of Presidential Documents	523-5230

The United States Government Manual

General information	523-5230

Other Services

Data base and machine readable specifications	523-3408
Guide to Record Retention Requirements	523-3187
Legal staff	523-4534
Privacy Act Compilation	523-3187
Public Laws Update Service (PLUS)	523-6641
TDD for the hearing impaired	523-5229

FEDERAL REGISTER PAGES AND DATES, SEPTEMBER

43547-43688.....3
43689-43860.....4
43861-43994.....5
43995-45880.....6

CFR PARTS AFFECTED DURING SEPTEMBER

At the end of each month, the Office of the Federal Register publishes separately a List of CFR Sections Affected (LSA), which lists parts and sections affected by documents published since the revision date of each title.

3 CFR

Proclamations:
6329.....43991
6330.....45879
Administrative Orders:
No. 91-48 of
August 17, 1991.....43861

5 CFR

351.....43995
831.....43863, 43865, 43866
842.....43865, 43866
Proposed Rules:
410.....44012

7 CFR

2.....43689
993.....43547
1007.....43690
Proposed Rules:
180.....43558
959.....43559

12 CFR

741.....44128
1507.....43997

13 CFR

108.....43867
121.....43869
Proposed Rules:
121.....43891

14 CFR

39.....43548-43550
61.....43970
71.....43691
93.....43692, 43965
121.....43974
135.....43974
221.....44000

16 CFR

305.....43693

17 CFR

5.....43694
15.....43694
33.....43694
Proposed Rules:
5.....43726
32.....43560
240.....44014
249.....44014, 44029

21 CFR

178.....43697
510.....43698
520.....43698
529.....43698
Proposed Rules:
101.....43964

22 CFR

40.....43551
302.....43699
Proposed Rules:
41.....43565
120.....43894
121.....43894, 43896

24 CFR

Proposed Rules:
905.....45814
990.....45814

26 CFR

Proposed Rules:
1.....43571
53.....43571

27 CFR

178.....43649

28 CFR

Proposed Rules:
16.....44049

29 CFR

541.....45824
1910.....43699
1926.....43699
Proposed Rules:
541.....45828

30 CFR

Proposed Rules:
701.....44049, 45780
773.....45780
778.....45780
780.....44049
784.....44049
816.....44049
817.....44049
840.....45780
843.....45780
901.....44050

32 CFR

163.....43871
199.....44001

33 CFR

1.....43700
117.....43649, 43871
165.....43701
Proposed Rules:
157.....44051

34 CFR

668.....43701

682 43701
Proposed Rules:
682 43978

36 CFR

242 43552
1191 45500
1192 45530

38 CFR

21 44007

39 CFR

Proposed Rules:
265 43736

40 CFR

81 43872
136 43702
248 43702
252 43702
253 43702
262 43704
266 43874
271 43704
721 43877
799 43878
Proposed Rules:
80 43682
82 43842
85 45866
86 43682
141 43573
142 43573
180 43737
264 43574
265 43574
280 43574
600 43682
761 43574
795 43574
798 43574
799 ..... 43574, 43897

42 CFR

57 43648
405 43706
410 43706
413 43706
414 43706

43 CFR

426 43553
Public Land Orders:
6868 43648
6869 43648
Proposed Rules:
4 45806

44 CFR

62 43881

46 CFR

586 44008

47 CFR

0 43648
1 44008
73 ..... 43555, 43556, 43884, 43885, 44009, 44010
90 43964
96 43964
97 43886
Proposed Rules:
69 44053
73 ..... 43575, 43576, 43900, 44054

48 CFR

215 43986
233 45832
237 43986
252 43986
819 44010
852 44010
1516 43710
1552 43710
Proposed Rules:
31 43739
970 43576

49 CFR

27 45584
37 45584
38 45584
541 43711
571 43556

50 CFR

100 43552
216 43887
217 43713
227 43713
661 ..... 43888, 43889
663 43718
675 43964
Proposed Rules:
20 43740

LIST OF PUBLIC LAWS

Note: No public bills which have become law were received by the Office of the Federal Register for inclusion in today's **List of Public Laws.**

Last List August 22, 1991