AUTHENTICATED
U.S. GOVERNMENT
INFORMATION
GPO

8-6-90
Vol. 55 No. 151

federal register

Monday
August 6, 1990

United States
Government
Printing Office
SUPERINTENDENT
OF DOCUMENTS
Washington, DC 20402

OFFICIAL BUSINESS
Penalty for private use, $300

SECOND CLASS NEWSPAPER

Postage and Fees Paid
U.S. Government Printing Office
(ISSN 0097-6326)

8-6-90
Vol. 55 No. 151
Pages 31572-32070

federal register

Monday
August 6, 1990

FEDERAL REGISTER Published daily, Monday through Friday, (not published on Saturdays, Sundays, or on official holidays), by the Office of the Federal Register, National Archives and Records Administration, Washington, DC 20408, under the Federal Register Act (49 Stat. 500, as amended; 44 U.S.C. Ch. 15) and the regulations of the Administrative Committee of the Federal Register (1 CFR Ch. I). Distribution is made only by the Superintendent of Documents, U.S. Government Printing Office, Washington, DC 20402.

The **Federal Register** provides a uniform system for making available to the public regulations and legal notices issued by Federal agencies. These include Presidential proclamations and Executive Orders and Federal agency documents having general applicability and legal effect, documents required to be published by act of Congress and other Federal agency documents of public interest. Documents are on file for public inspection in the Office of the Federal Register the day before they are published, unless earlier filing is requested by the issuing agency.

The seal of the National Archives and Records Administration authenticates this issue of the **Federal Register** as the official serial publication established under the Federal Register Act. 44 U.S.C. 1507 provides that the contents of the **Federal Register** shall be judicially noticed.

The **Federal Register** will be furnished by mail to subscribers for $340 per year in paper form; $195 per year in microfiche form; or $37,500 per year for the magnetic tape. Six-month subscriptions are also available at one-half the annual rate. The charge for individual copies in paper or microfiche form is $1.50 for each issue, or $1.50 for each group of pages as actually bound, or $175.00 per magnetic tape. Remit check or money order, made payable to the Superintendent of Documents, U.S. Government Printing Office, Washington, DC 20402, or charge to your GPO Deposit Account or VISA or Mastercard.

There are no restrictions on the republication of material appearing in the **Federal Register.**

How To Cite This Publication: Use the volume number and the page number. Example: 55 FR 12345.

SUBSCRIPTIONS AND COPIES

PUBLIC

Subscriptions:

Paper or fiche	**202–783–3238**
Magnetic tapes	**275–3328**
Problems with public subscriptions	**275–3054**

Single copies/back copies:

Paper or fiche	**783–3238**
Magnetic tapes	**275–3328**
Problems with public single copies	**275–3050**

FEDERAL AGENCIES

Subscriptions:

Paper or fiche	**523–5240**
Magnetic tapes	**275–3328**
Problems with Federal agency subscriptions	**523–5240**

For other telephone numbers, see the Reader Aids section at the end of this issue.

Contents

Federal Register

Vol. 55, No. 151

Monday, August 6, 1990

Agricultural Marketing Service
RULES
Lemons grown in California and Arizona, 31813

Agriculture Department
See Agricultural Marketing Service; Food and Nutrition Service; Food Safety and Inspection Service; Forest Service

Air Force Department
NOTICES
Meetings:
Scientific Advisory Board, 31874
(2 documents)

Alcohol, Drug Abuse, and Mental Health Administration
NOTICES
Grants and cooperative agreements; availability, etc.:
Substance abuse prevention conference program, 31897

Civil Rights Commission
NOTICES
Meetings; Sunshine Act, 31979

Coast Guard
RULES
Boating safety:
Personal floatation devices; equipment requirements for recreational boats, 32032
International Regulations for Preventing Collisions at Sea (72 COLREGS); amendments, 31830
PROPOSED RULES
Drawbridge operations:
Virginia, 31846

Commerce Department
See Export Administration Bureau; Foreign-Trade Zones Board; International Trade Administration; National Oceanic and Atmospheric Administration

Committee for the Implementation of Textile Agreements
NOTICES
Textile and apparel categories:
Part-categories for cotton and man-made fiber textile products produced or manufactured in various countries, 31873

Commodity Futures Trading Commission
NOTICES
Meetings; Sunshine Act, 31979
(5 documents)

Comptroller of the Currency
PROPOSED RULES
National banks:
Examination and supervision, 31840

Conservation and Renewable Energy Office
NOTICES
Grants and cooperative agreements; availability, etc.:
District cooling engineering and design program, 31877

Defense Department
See also Air Force Department
RULES
Freedom of Information Act; implementation:
Defense Communications Agency, 31829

Education Department
NOTICES
Grants and cooperative agreements; availability, etc.:
Minority science improvement program, 31874
Meetings:
Student Financial Assistance Advisory Committee, 31874

Energy Department
See also Conservation and Renewable Energy Office; Federal Energy Regulatory Commission
NOTICES
Grant and cooperative agreement awards:
Hopenfeld, Joran, Dr., 31875
Meetings:
U.S. Alternative Fuels Council, 31877
Natural gas exportation and importation:
Granite State Gas Transmission, Inc., 31878
IGI Resources, Inc., 31878
San Diego Gas & Electric Co., 31878
Victoria Gas Corp., 31878
Washington Water Power Co., 31879
Senior Executive Service:
Performance Review Board; membership, 31875

Environmental Protection Agency
RULES
Air quality implementation plans; approval and promulgation; various States:
California, 31832, 31833
(2 documents)
Illinois; correction, 31981
PROPOSED RULES
Hazardous waste:
Identification and listing—
Exclusions, 31849
NOTICES
Meetings:
Asbestos-containing materials in—
Public and commercial buildings, 31880
Superfund; responce and remedial actions; proposed settlements, etc:
Presque Isle Chemical Site, PA, 31881
Toxic and hazardous substances control:
Premanufacture exemption applications, 31882
Premanufacture notices receipts, 31882
Water pollution control:
Clean Water Act—
State water quality standards; approval and disapproval lists and individual control strategies; availability, 31891

Export Administration Bureau
RULES
Export licensing:
Individual validated licenses and commodity control list; clarifications, 31822

Family Support Administration
See Refugee Resettlement Office

Federal Aviation Administration
RULES
Airworthiness directives:
McDonnell Douglas, 31816, 31821
(3 documents)
McDonnell Douglas; correction, 31821
PROPOSED RULES
Airport radar service areas, 32064
NOTICES
Airport noise compatibility program:
Colorado Springs Municipal Airport, CO, 31937
Artisan liens on aircraft; recordability, 31938

Federal Communications Commission
PROPOSED RULES
Common carrier services:
Operator service providers
Correction, 31859
Tariffs—
Interstate long-distance marketplace competition, 31858
Radio services, special:
Aviation services—
VHF aircraft radios frequency tolerance, 31859
NOTICES
Agency information collection activities under OMB review, 31892

Federal Deposit Insurance Corporation
NOTICES
Meetings; Sunshine Act, 31979

Federal Emergency Management Agency
RULES
Flood elevation determinations:
Alabama et al., 31837
Alaska et al., 31835
North Carolina et al., 31836
PROPOSED RULES
Flood elevation determinations:
California et al., 31855
NOTICES
Agency information collection activities under OMB review, 31892, 31893
(2 documents)
Disaster and emergency areas:
Nebraska, 31893
(3 documents)
Vermont, 31894
Wisconsin, 31894

Federal Energy Regulatory Commission
RULES
Natural Gas Policy Act:
First sellers to make and report refunds; deadline establishment; clarification, 32026
NOTICES
Natural gas companies:
Btu measurement adjustments refunds, 32029
Applications, hearings, determinations, etc.:
Texas Gas Transmission Corp., 31875
Williams Natural Gas Co., 31876
Williston Basin Interstate Pipeline Co., 31876
(2 documents)

Federal Maritime Commission
NOTICES
Agreements filed, etc., 31894
(2 documents)

Federal Reserve System
RULES
Truth in lending (Regulations Z):
Preemption determinations—
Wisconsin, 31815
NOTICES
Applications, hearings, determinations, etc.:
Button Gwinnett Bancorp, Inc., et al., 31895
First Eastern Corp. et al., 31895
First Western Bancorp, Inc., et al., 31896
Industrial Bank of Japan, Ltd., 31896

Financial Management Service
See Fiscal Service

Fiscal Service
NOTICES
Federal tax deposit fee reduction, 31939

Fish and Wildlife Service
PROPOSED RULES
Endangered and threatened species:
Ka'u silversword, 31860
Winged mapleleaf freshwater mussel, 31864

Food and Drug Administration
RULES
Animal drugs, feeds, and related products:
Melengestrol acetate, monensin, lasalocid, and tylosin, 31827
Color additives:
D&C violet No. 2; intraocular lens haptics, 31823
[Phthalocyaninato(2-)] copper; coloring sutures, 31824
Food additives:
Adjuvants, production aids, and sanitizers—
3,3'-[2,5-dimethyl-1,4-phenylene) bis, etc., 31826
Paper and paperboard components—
Glutaraldehyde, 31824
Polymers—
4-methylpentene-1 copolymers, 31825
NOTICES
Color additive petitions:
Concept, Inc., 31897

Food and Nutrition Service
RULES
Food stamp program:
Civil money penalties in lieu of permanent disqualification for trafficking, 31809

Food Safety and Inspection Service
PROPOSED RULES
Meat and poultry inspection:
Canadian products, imported; inspection procedures and exemptions, 31840
NOTICES
Meetings:
Microbiological Criteria for Foods National Advisory Committee, 31868

Foreign-Trade Zones Board
NOTICES
Applications, hearings, determinations, etc.:
Ohio, 31869

Forest Service
NOTICES
Meetings:
Winding Stair Tourism and Recreation Advisory Council, 31868

Health and Human Services Department
See Alcohol, Drug Abuse, and Mental Health Administration; Food and Drug Administration; Human Development Services Office; Public Health Service; Refugee Resettlement Office; Social Security Administration

Health Resources and Services Administration
See Public Health Service

Housing and Urban Development Department
NOTICES
Agency information collection activities under OMB review, 31901, 31903
(4 documents)
Privacy Act:
Systems of records, 31900

Human Development Services Office
NOTICES
Agency information collection activities under OMB review, 31897

Interior Department
See Fish and Wildlife Service; Land Management Bureau; Surface Mining Reclamation and Enforcement Office

International Trade Administration
NOTICES
Antidumping:
Porcelain-on-steel cooking ware from Mexico, 31870
Antidumping and countervailing duties:
Administrative protective orders; sanctions for violations, 31869
Short supply determinations:
Modular steel scaffolding; correction, 31981

Interstate Commerce Commission
NOTICES
Rail carriers:
Direct service orders—
D&H Corp. et al., 31906
Passenger train operation—
Belt Railway Co. of Chicago et al., 31906

Justice Department
See also National Institute of Justice
NOTICES
Agency information collection activities under OMB review, 31908

Labor Department
See Occupational Safety and Health Administration

Land Management Bureau
NOTICES
Management framework plans, etc.:
Idaho, 31904
Realty actions; sales, leases, etc.:
Utah, 31905
Recreation management restrictions, etc.:
Battle Mountain District, NV, 31905

National Archives and Records Administration
RULES
Records management:
Creation and maintenance of records; adequate and proper documents
Correction, 31982
Federal records disposition
Correction, 31982

National Communications System
NOTICES
Federal telecommunications standards:
Telecommunications—
Telecommunication systems; time and frequency information, 31910

National Institute of Justice
NOTICES
Grants and cooperative agreements; availability, etc.:
Technology assessment program information center, 31908

National Labor Relations Board
NOTICES
Meetings; Sunshine Act, 31979

National Oceanic and Atmospheric Administration
NOTICES
Environmental statements; availability, etc.:
Ashepoo-Combahee-Edisto (A.C.E.) Basin National Estuarine Research Reserve, SC, 31871
Permits:
Marine mammals, 31872
(3 documents)

Nuclear Regulatory Commission
NOTICES
Agency information collection activities under OMB review, 31910
Environmental statements; availability, etc.:
Virginia Electric & Power Co., 31911
Applications, hearings, determinations, etc.:
Gulf States Utilities Co., 31912
Illinois Power Co. et al., 31912, 31913
(2 documents)
Long Island Lighting Co., 31914, 31915
(2 documents)
Northeast Nuclear Energy Co. et al., 31917
Public Service Electric & Gas Co. et al., 31919

Occupational Safety and Health Administration
RULES
Safety and health standards:
Electrical safety-related work practices, 31984

Public Health Service
See also Alcohol, Drug Abuse, and Mental Health Administration; Food and Drug Administration
NOTICES
Medical technology scientific evaluations:
Cardiac rehabilitation program services for percutaneous transluminal coronary angioplasty (PTCA) and cardiac valve surgery patients, 31898

Refugee Resettlement Office
NOTICES
Grants and cooperative agreements; availability, etc.:
Refugee resettlement program, 32022

Securities and Exchange Commission
NOTICES
Self-regulatory organizations; proposed rule changes:
Boston Stock Exchange, Inc., 31920
Cincinnati Stock Exchange, Inc., 31923
National Association of Securities Dealers, Inc., 31924
National Securities Clearing Corp., 31922
New York Stock Exchange, Inc., 31930
Applications, hearings, determinations, etc.:
ABT Growth & Income Trust et al., 31933
Benham Variable Insurance Trust, 31934

Social Security Administration
NOTICES
Social security rulings:
Pain and other symptoms, evaluation (SSR 90-1p), 31898

State Justice Institute
NOTICES
Grants, cooperative agreements, and contracts; guidelines, 32038

Surface Mining Reclamation and Enforcement Office
RULES
Permanent program and abandoned mine land reclamation plan submissions:
Kentucky; correction, 31829
PROPOSED RULES
Permanent program and abandoned mine land reclamation plan submissions:
New Mexico, 31842, 31843 (2 documents)
Oklahoma, 31844, 31845 (2 documents)

Textile Agreements Implementation Committee
See Committee for the Implementation of Textile Agreements

Transportation Department
See also Coast Guard; Federal Aviation Administration
NOTICES
Aviation proceedings:
Agreements filed; weekly receipts, 31936
Certificates of public convenience and necessity and foreign air carrier permits; weekly applications, 31936
Hearings, etc.—
Air Molokai, Inc., 31937
Empire Airlines, Inc., 31937
Star Aviation, 31937
Standard foreign fare level—
Index adjustment factors, 31937

Treasury Department
See also Comptroller of the Currency; Fiscal Service
NOTICES
Agency information collection activities under OMB review, 31939

United States Information Agency
NOTICES
Privacy Act:
Systems of records, 31940

Veterans Affairs Department
PROPOSED RULES
Loan guaranty:
Properties conveyance to VA by holders; title evidence and occupancy requirements, 31847

Separate Parts In This Issue

Part II
Department of Labor, Occupational Safety and Health Administration, 31984

Part III
Department of Health and Human Services, Office of Refugee Resettlement, 32022

Part IV
Department of Energy, Federal Energy Regulatory Commission, 32026

Part V
Department of Transportation, Coast Guard, 32032

Part VI
State Justice Institute, 32038

Part VII
Department of Transportation, Federal Aviation Administration, 32064

Reader Aids
Additional information, including a list of public laws, telephone numbers, and finding aids, appears in the Reader Aids section at the end of this issue.

CFR PARTS AFFECTED IN THIS ISSUE

A cumulative list of the parts affected this month can be found in the Reader Aids section at the end of this issue.

7 CFR
278.....31809
910.....31813

9 CFR
Proposed Rules:
312.....31840
322.....31840
327.....31840
381.....31840

12 CFR
226.....31815
Proposed Rules:
4.....31840

14 CFR
39 (4 documents).....31816, 31821
Proposed Rules:
71.....32064

15 CFR
772.....31822
799.....31822

18 CFR
270.....32026

21 CFR
74 (2 documents).....31823, 31824
176.....31824
177.....31824
178.....31826
558.....31827

29 CFR
1910.....31984

30 CFR
917.....31829
Proposed Rules:
931 (2 documents).....31842, 31843
936 (2 documents).....31844, 31845

32 CFR
287.....31829

33 CFR
80.....31830
175.....32032
181.....32032
Proposed Rules:
117.....31846

36 CFR
1222.....31982
1228.....31982

38 CFR
Proposed Rules:
36.....31847

40 CFR
52 (3 documents).....31832, 31835–31981
Proposed Rules:
261.....31849

44 CFR
65 (2 documents).....31836
67.....31837
Proposed Rules:
67.....31855

47 CFR
Proposed Rules:
61.....31858
64.....31859
68.....31859
87.....31859

50 CFR
Proposed Rules:
17 (2 documents).....31860, 31864

Rules and Regulations

Federal Register
Vol. 55, No. 151
Monday, August 6, 1990

This section of the FEDERAL REGISTER contains regulatory documents having general applicability and legal effect, most of which are keyed to and codified in the Code of Federal Regulations, which is published under 50 titles pursuant to 44 U.S.C. 1510.
The Code of Federal Regulations is sold by the Superintendent of Documents. Prices of new books are listed in the first FEDERAL REGISTER issue of each week.

DEPARTMENT OF AGRICULTURE

Food and Nutrition Service

7 CFR Part 278

[Amdt. 323]

Food Stamp Program; Civil Money Penalties in Lieu of Permanent Disqualification for Trafficking

AGENCY: Food and Nutrition Service, USDA.

ACTION: Final rule.

SUMMARY: Section 344 of Public Law 100–435, the Hunger Prevention Act of 1988, amended section 12(b)(3) of the Food Stamp Act of 1977 effective July 1, 1989, to provide the Secretary of Agriculture with the discretion to impose a civil money penalty of up to $20,000 in lieu of permanent disqualification of a firm for trafficking. This discretionary authority may be utilized if the Secretary determines that there is substantial evidence that such a firm had an effective policy and program in effect to prevent violations. Public Law 100–619 (102 Stat. 3198), signed on November 5, 1988, amended section 701 of the Hunger Prevention Act to make the amendment to section 12(b)(3) of the Food Stamp Act effective October 1, 1988. An interim rule implementing Section 344 of Public Law 100–435 was published on May 2, 1989 at 54 FR 18641. It was determined that a 60-day comment period would provide useful input for the development of the final rule. This final rule establishes eligibility criteria for firms seeking a civil money penalty in lieu of a permanent disqualification for trafficking, as well as standards that shall be utilized by the Department to make a determination regarding the effectiveness of the firm's compliance policy and program. This regulation also sets forth the formula that shall be used to establish the amount of the civil money penalty assessed against eligible firms requesting such penalty in lieu of a permanent disqualification.

EFFECTIVE DATE: This action is effective retroactively to October 1, 1988.

FOR FURTHER INFORMATION CONTACT: Dwight Moritz, Coupon and Retailer Branch, Benefit Redemption Division, Food and Nutrition Service, Alexandria, Virginia 22302, (703) 756–3418.

SUPPLEMENTARY INFORMATION:

Classification

Executive Order 12291

The Department has reviewed this rule under Executive Order 12291 and Secretary's Memorandum No. 1512–1. The rule will affect the economy by less than $100 million a year. The rule will not raise costs or prices for consumers, industries, government agencies or geographic regions. There will be no adverse effects on competition, employment, investment, productivity, innovation, or on the ability of United States-based enterprises to compete with foreign-based enterprises in domestic or export markets. Therefore, the Department has classified the rule as "not major."

Executive Order 12372

The Food Stamp Program is listed in the Catalog of Federal Domestic Assistance under No. 10.551. For the reasons set forth in the final rule and related Notice to 7 CFR 3015 Subject V (48 FR 29115, June 24, 1983), this program is excluded from the scope of the Executive Order 12372 which requires inter-governmental consultation with State and local officials.

Regulatory Flexibility Act

This rule has been reviewed with regard to the requirements of the Regulatory Flexibility Act of 1980 (Pub. L. 96–354). The Administrator of the Food and Nutrition Service has certified that this action does not have a significant economic impact on a substantial number of small entities. This action would have almost no impact on the vast majority of authorized firms, most of which follow the rules carefully.

Paperwork Reduction Act

This rule does not contain reporting or recordkeeping requirements subject to approval by the Office of Management and Budget (OMB) under the Paperwork Reduction Act of 1980 (44 U.S.C. 3507).

Effective Date

Public Law 100–619 mandates that the amendment to section 12(b)(3) of the Food Stamp Act of 1977 by Public Law 100–435 be made effective October 1, 1988. Since the intent of the provision is to make relief available to individual firms as of October 1, 1988, it is critical that implementing regulations be promulgated as soon as possible. Thus, in accordance with 5 U.S.C. 553(d), good cause exists for this rulemaking to take effect less than 309 days from publication of this rule.

Background

Section 344 of Public Law 100–435, the Hunger Prevention Act of 1988, amends section 12(b)(3) of the Food Stamp Act to provide the Secretary of Agriculture with the discretion to impose a civil money penalty of up to $20,000 in lieu of a permanent disqualification for retailers found to have trafficked (purchased food coupons, ATP cards or other benefit instruments for cash). This discretionary authority may be utilized if the Secretary determines that there is substantial evidence that such firms had an effective policy and program in effect to prevent violations. Public Law 100–619, signed on November 5, 1988, amended section 701 of the Hunger Prevention Act to make this civil money penalty provisions effective October 1, 1988. This final rule implements section 344 of Public Law 100–435 by establishing eligibility criteria for forms seeking a civil money penalty in lieu of permanent disqualification for trafficking and establishes standards that will be used by the Department to make a determination regarding the effectiveness of a firm's compliance policy and program. An interim rule which provided for a public comment period of 60 days was published on May 2, 1989. Four comments were received by the Department. Previously published program regulations at 7 CFR Part 278 reflected the prior requirement in section 12(b)(3) of the Food Stamp Act to impose a permanent retailer disqualification from program participation upon the first occasion of the purchase (trafficking) of food coupons or ATP cards. In accordance with Departmental interpretation of

prior legislation, no discretionary authority existed to allow a less severe sanction for any trafficking case regardless of (1) the amount of coupons or ATP cards or other benefit instruments exchanged for cash, or (2) management initiatives undertaken by the firm which were designed to preclude such program violations by firm personnel. The House Agriculture Committee report language pertinent to this amendment provides confirmation of Congress' belief that trafficking in food coupons is a serious offense which warrants permanent disqualification from Food Stamp Program (FSP) participation. H.R. Rep. No. 828, 100th Cong., 2nd Sess. 27–28 (1988).

However, in reexaming the requirement for permanent disqualification for trafficking, Congress expressed concern about the fairness of permanent disqualification in two circumstances. The first occurs when small amounts of coupons are involved and the permanent disqualification penalty appears to be disproportionate to the offense. The second situation arises where trafficking take place without the complicity of or benefit to a firm's ownership. Therefore, Congress amended the Food Stamp Act to provide the Secretary with the discretion to assess a civil money penalty in lieu of permanent disqualification if substantial evidence exists that the firm had established and implemented an effective compliance policy and program to prevent violations. This amendment provides the Secretary with the discretion to develop standards against which a firm's actions to prevent such violations may be measured.

The discretion to impose a civil money penalty in lieu of permanent disqualification of the firm allows the Department to review a firm's compliance efforts, as well as to ensure that the monetary penalty imposed on a firm relates more closely to the seriousness of the trafficking violations committed by the firm.

Small Businesses and Written Requirements

Two comments were received regarding the impact that the regulatory requirements for written compliance policies would have on small retailers. One of those comments, made by an advocacy organization, pointed out that it was critical for FNS to notify all authorized stores of this requirement immediately so as to ensure that those stores would not be penalized due to their lack of knowledge of the regulatory requirements. The Department sent a special retailer notice to all food stamp firms on July 7, 1989, which informed them of the program requirements embodied in the interim regulations. This action ensures that all food stamp firms are aware of the new requirements.

The second commenter, an attorney representing a small firm, stated that imposing a requirement for *written* compliance policies as well as documentation of compliance program implementation would categorically eliminate small businesses from being able to qualify for the civil money penalty. Trafficking is a serious offense for which the statute requires permanent disqualification unless substantial evidence of an effective policy and program to prevent such violations exists. The Department believes that it is imperative that firms wishing to be determined eligible for a civil money penalty in lieu of permanent disqualification for trafficking provide written evidence of an effective policy and program to prevent such violations in order for an appropriate determination to be made. Written policies are specifically noted as examples in the House Agriculture Committee report. Id. at 28. Moreover, as discussed in the preamble to the interim rule (54 FR 18641), bonafide written statements of policy shall be deemed as conclusive evidence required by the statute to show that the firm has developed such a policy although not necessarily that the policy has been implemented effectively. Although such firms may not have developed written policies in the past, small business are not precluded from eligibility for a civil money penalty since they may now establish and implement such a compliance policy and program. Further, the Committee report did not differentiate between acceptable compliance programs in smaller stores and those acceptable in larger stores.

Formula

The Department set out a formula for calculating the civil money penalty a firm would receive in lieu of permanent disqualification for trafficking—sometimes referred to as the trafficking CMP—consistent with those used to calculate the other types of civil money penalties available to firms in the Food Stamp Program. The trafficking CMP formula in the interim rule, however, also provided for variations based upon the frequency and severity of the trafficking violations committed by the firm.

Two comments were received regarding the trafficking CMP formula and its application. One commenter suggested that we calculate the penalty by using two separate calculations and assess the firm the amount which represents the greater of the two products. This commenter believed that in addition to calculating the penalty by determining the firm's average monthly redemptions (AMR) of food coupons for a 12-month period ending with the month immediately preceding the month the firm was charged with violations, the Department should also calculate the potential penalty based upon the firm's AMR for the 12-month period ending with the month prior to the latest month in which the alleged violations occurred. The rationale provided by the commenter was that, due to the time period between the occurrence of the violation and the charging of the firm, a firm could present a defense that it is being penalized for months in which no violations have been alleged or proven.

The Department wishes to reiterate that the formula that is being used to calculate the trafficking CMP is consistent with the basic formula for hardship and transfer of ownership CMP's available in the program, as required by Section 12 of the Act and implemented in 7 CFR part 278.6(g). The Department believes that, in light of the $20,000 statutory limit on the amount that may be imposed for trafficking, the suggested revision would only complicate the calculation with little impact on the final CMP determination.

That same commenter also took issue with the current 10 percent multiplier used by the Department and included in the trafficking CMP formula. The 10 percent figure has traditionally been used when calculating the hardship CMP to represent profits attributable to the coupon and related cash business of food stamp customers that would be lost if the store were to be disqualified from FSP participation.

This commenter recommends that the multiplier be increased to reflect 35 to 40 cents revenue per food stamp dollar spent at the store. The Department, however, believes that the traditional figure of 10 percent is adequate for the purpose of the CMP calculations and, therefore, has made no change in the formula presented in the interim rule.

A second commenter noted that the method for calculating the trafficking CMP by using a firm's AMR penalizes stores which are located in areas of high food stamp redemptions and recommends that the Department consider a different formula so that the calculation cannot result in the highest CMP amount when an employee has trafficked for a small sum.

The Department believes that the formula used in the interim rule appropriately recognizes variations

based upon the severity of the trafficking offense and wishes to reiterate that the approach taken with regard to the trafficking CMP formula is necessary to equitably penalize those firm's whose employees commit the most serious of violations against the program—trafficking in food coupons or other benefits instruments. We believe that the penalty formula in the interim rule correctly exemplifies Congress' concern that the penalty should be proportionate to the offense. H.R. Rep. No. 828 at 28. Therefore, there has been no change made to the trafficking CMP formula in this final rule.

Training

One commentor perceived the requirement to train firm personnel one month after employment to be an arbitrary standard. The Department believes that the training of firm personnel should be conducted prior to their handling of any food stamp transaction and recognizes that there are a significant number of firms that have instituted such a policy. However, the Department feels that imposing a requirement for prior training on all firms may be perceived as unreasonable. Therefore, the one-month training standard has been established since it provides a reasonable assurance of compliance by all authorized firms.

One commentor also questioned the requirement that *all* employees of the firm be trained in food stamp requirements, citing as an example the fact that butchers in the firm's packing plant would need to receive training in order to comply with the interim regulation's requirement. The Department wishes to point out that the language included in the preamble to the interim rule recognizes that training plans may be designed to accommodate the various functions of the individual employees in the operation of the store. However, the Department wishes to reiterate that a comprehensive, aggressive, active and ongoing training program is essential to the establishment and maintenance of an effective compliance program. The opportunity for trafficking and the improper handling of food coupons does not exist exclusively for employees such as managers and cashiers. It has been documented that even employees who do not normally handle coupons have access to them by virtue of their employment at the firm.

In response to this comment, however, 7 CFR 278.6(i)(2) has been revised to require training for all employees whose work brings them into contact with food coupons or who are assigned to a location where food stamps are accepted, handled or processed. The training requirement would thus apply to all employees at the location of any retail or wholesale operation that accepts food stamps. If a firm has distinct locations where no food stamp transactions take place or no coupon processing is conducted, such as a packing plant or warehouse distribution site, it is conceivable that no food stamp compliance training would be necessary at those locations. The Department would expect that the existence of such locations and the training policy would be documented in the compliance policy formulated by the firm.

Compliance Program and Training Guidance and Standards

Two comments were received regarding the need for guidance to retailers in developing their compliance policies and programs. One commentor requested that specific examples of standards be included in the rule.

Examples included in the House Agriculture Committee's report of the type of documentation that can be used, and what the documentation should include, are embodied in the rulemaking. H.R. Rep. No. 828 at 28. In addition, program regulations in general clearly identify the requirements for retailer participation in the program, and program publications which are available to all retailers outline the requirements for proper operation of the FSP in a store. Departmental staff have been, and will continue to be, available to assist retailers in training development and implementation. Therefore, the Department believes that it is unnecessary to develop any other guidance or program procedures relating to trafficking CMP eligibility.

The Department wishes to emphasize that assistance it provides in the development of a firm's compliance policy and program cannot hold that firm harmless for future violations. The effectiveness of the implementation of a firm's policies and programs is the critical factor in determining eligibility for a trafficking CMP in lieu of permanent disqualification.

The second commentor felt that the Department should institute a certification system whereby retailers would be precertified as having an effective compliance policy and program. Precertification implies that, once a firm's compliance policy and program are deemed acceptable, the CMP would become virtually automatic without any evaluation of the actual implementation of such a policy and program. The commentor's proposal would result in blanket eligibility for a CMP where current firm practices may or may not merit eligibility for a CMP in lieu of permanent disqualification for trafficking.

Eligibility for a Civil Money Penalty in Lieu of Permanent Disqualification for Trafficking

Two comments were received regarding the interim rule's prohibition against the eligibility of a firm for a CMP in lieu of permanent disqualification for trafficking when a manager of the store committed the trafficking violation (Criterion 4). A comment from members of the House Agriculture Committee, as well as comments from a multi-unit retail firm, contend that the Department misinterpreted the intent of Congress' amendment to the Act, particularly in the case of multi-unit firms, by maintaining a strict liability approach with regard to a manager's responsibility for violations. The Congressional comment expressed specific disagreement with the Department's assertion that no policy or program to prevent food stamp violations could be effective if a store manager were involved in such a serious violation. In addition, the commentors expressed concerns about the relationship between management responsibilities for firm operations and trafficking CMP eligibility.

In response to these comments, the Department has revised the final rule by including a definition of "management" for the purpose of determining trafficking CMP eligibility when a manager is involved in the trafficking violation. Section 278.6(i), Criterion 4, has been expanded to include such a definition. For the purposes of trafficking CMP eligibility, a person who holds the title of manager is considered to be a part of management if that individual carries out either of the following responsibilities: (1) Personnel functions such as hiring, firing or evaluating employees; *or* (2) financial functions that include completing Redemption Certificates for food coupon deposits or closing out daily cash receipts. If the individual involved in trafficking has the title of manager but does not meet either of these definitional criteria, the firm will not be deemed to have automatically failed the effective policy test. However, the firm must still meet all other criteria for ensuring that an effective policy and program were established and implemented in order to document eligibility for the CMP in lieu of permanent disqualification for trafficking.

Effective Date

Public Law 100–619, signed on November 5, 1988, provides that the amendment made to section 12(b)(3) for the Food Stamp Act by Public Law 100–435, the Hunger Prevention Act, be made effective October 1, 1988. The Department interprets this to mean that Congress intended expeditious implementation of the amendment. Consequently, this option is available to firms as of October 1, 1988. In developing the interim rule, the Department sought to provide relief to the broadest population of retailers while maintaining administrative feasibility. As discussed in the interim rule, the option to receive a civil money penalty in lieu of a permanent disqualification for trafficking shall not be made available to any firm that had either forfeited or exhausted all opportunities for appeal of a permanent disqualification which took effect prior to October 1, 1988. However, this relief *is* available to any firm for which permanent disqualification for trafficking had not yet taken effect as of October 1, 1988, with one exception. Firms pending a judicial review decision pursuant to Section 14 of the Act (7 U.S.C. 2023) as of October 1, 1988 that had not received a stay of the administrative action were also eligible for consideration for a civil money penalty in lieu of permanent disqualification since the opportunity for further review had not been concluded as of October 1, 1988. This holds despite the fact that disqualification action had been implemented since *final* administrative action had not yet taken effect.

As previously discussed, this final rule amends the interim regulations' provisions concerning management involvement in trafficking violations in establishing the eligibility of a firm for a CMP in lieu of permanent disqualification. The Department will initiate appropriate action to implement this change from the interim rule for those cases in which either the initial administrative determination or administrative appeal decision by the Department is pending. Upon publication of this final rule, the Department will notify all authorized firms of the changes from the interim rule published May 2, 1989.

Publication of this final rule serves as notice of the change from the interim rule to those firms that were denied a CMP in lieu of permanent disqualification for trafficking based upon the interim rule's prohibition against CMP relief where management was involved in the trafficking violations. If any such firm believes that the outcome of its case may be different under the final rule, it may contact the appropriate Food and Nutrition Service Regional Office and request reconsideration for a trafficking CMP in lieu of permanent disqualification. However, even though these firms may be eligible for a CMP, the Department may determine that these firms may be required to continue in disqualification status for a finite period of time for other violations, such as the sale of ineligible items, which occurred during the investigation when the trafficking violations occurred. The Department will not reinstate previously disqualified firms during this reconsideration process, but will act expeditiously on all requests for reconsideration. The Department will take prompt action on all cases found eligible for reinstatement once the reconsideration process is completed.

Miscellaneous

One commentor pointed out that the interim rulemaking makes no distinction between major and minor ineligibles and requested confirmation of whether such a distinction will continue to exist in the program. The Department was simply pointing out in the preamble to the interim rule that a firm must serve the appropriate period of disqualification for other violations committed in addition to the payment of a trafficking CMP. Neither penalties for the sale of ineligibles not other non-trafficking offenses are affected by this rulemaking. All penalties and sanctions continue to exist as they have; the only new provision if the option for a CMP in lieu of permanent disqualification for trafficking.

Another commentor requested that the word "firm" be clarified to ensure that it would not be interpreted to mean that an entire mulit-unit operation would be penalized through disqualification due to violations committed by personnel at one of the store locations. Therefore, the Department clarifies in this preamble that the terms "retail food store" and "firm" are synonymous as used in the context of food stamp regulations.

One commentor believed that the 10-day period provided in § 278.6(b)(1) to request and provide documentation of eligibility for the trafficking CMP is insufficient time for a firm to collect and present evidence of the existence of an effective compliance policy and program. The Department wishes to point out that this 10-day timeframe is consistent with other regulatory requirements regarding responses to charge letters and requests for administrative review. Furthermore, the Department is simply requesting copies of policies and documentation of compliance program activities already in existence as required by the rulemaking. The Department believes that the 10-day response period is adequate to locate and copy these existing documents. Therefore, there has been no change in this provision.

List of Subjects in 7 CFR Part 278

Administrative practice and procedure, Banks, Banking, Claims, Food stamps, Groceries-retail, Groceries, General line—Wholesalers, Penalties.

PART 278—PARTICIPATION OF RETAIL FOOD STORES, WHOLESALE FOOD CONCERNS AND INSURED FINANCIAL INSTITUTIONS

1. The authority citation for part 278 continues to read as follows:

Authority: 7 U.S.C. 2011–2029.

2. The amendments to § 278.6 as published at 54 FR 18645–18647, May 2, 1989, are adopted as final with the following changes: paragraph (i) is amended by adding a clarifying sentence to the end of Criterion 4; and the first sentence of paragraph (i)(2)(i) is revised. The addition and revision read as follows:

§ 278.6 Disqualification of retail food stores and wholesale food concerns, and the imposition of civil money penalties in lieu of disqualifications.

* * * * *

(i) *Criteria for eligibility for a civil money penalty in lieu of permanent disqualification for trafficking.* * * *

Criterion 4. * * * For purposes of this section, a person who holds the title of manager is considered to be a part of firm management if that individual carries out *either* of the following responsibilities: (1) personnel functions such as hiring, firing, or evaluating employees, or (2) financial functions that include completing Redemption Certificates for food coupon deposits or closing out daily cash receipts.

* * * * *

(2) * * *

(i) Training for all managers and employees whose work brings them into contact with food stamps or who are assigned to a location where food stamps are accepted, handled or processed shall be conducted within one month of the institution of the compliance policy under Criterion 1 above. * * *

* * * * *

3. In § 278.9, a new paragraph (h) is added as follows:

§ 278.9 Implementation of amendments relating to the participation of retail food stores, wholesale food concerns and insured financial institutions.

* * * * *

(h) *Amendment No. 323* The program changes made to § 278.6 by this amendment are retroactively effective October 1, 1988.

Dated: July 25, 1990.

Betty Jo Nelsen,

Administrator, Food and Nutrition Service.

[FR Doc. 90-18187 Filed 8-3-90; 8:45 am]

BILLING CODE 3410-30-M

Agricultural Marketing Service

7 CFR Part 910

[Lemon Regulation 729]

Lemons Grown in California and Arizona; Limitation of Handling

AGENCY: Agricultural Marketing Service, USDA.

ACTION: Final rule.

SUMMARY: This regulation establishes the quantity of California-Arizona lemons that may be shipped to domestic markets during the period from August 5 through August 11, 1990. Consistent with program objectives, such action is needed to balance the supplies of fresh lemons with the demand for such lemons during the period specified. This action is based on a recommendation by the Lemon Administrative Committee (Committee), the price/parity projection for the current season, and other information. The Committee is responsible for local administration of the lemon marketing order.

EFFECTIVE DATE: Regulation 729 (7 CFR part 910) is effective for the period from August 5 through August 11, 1990.

FOR FURTHER INFORMATION CONTACT: Beatriz Rodriguez, Marketing Specialist, Marketing Order Administration Branch, Fruit and Vegetable Division, Agricultural Marketing Service, U.S. Department of Agriculture (Department), room 2524-S, P.O. Box 96456, Washington, DC 20090-6456; telephone: (202) 475-3861.

SUPPLEMENTARY INFORMATION: This final rule is issued under Marketing Order 910 (7 CFR part 910), as amended, regulating the handling of lemons grown in California and Arizona. This order is effective under the Agricultural Marketing Agreement Act of 1937, as amended, hereinafter referred to as the Act.

This final rule has been reviewed by the Department in accordance with Departmental Regulation 1512-1 and the criteria contained in Executive Order 12291 and has been determined to be a "non-major" rule.

Pursuant to requirements set forth in the Regulatory Flexibility Act (RFA), the Administrator of the Agricultural Marketing Service (AMS) has considered the economic impact of this action on small entities as well as larger ones.

The purpose of the RFA is to fit regulatory actions to the scale of business subject to such actions in order that small businesses will not be unduly or disproportionately burdened. Marketing orders issued pursuant to the Act, and rules issued thereunder, are unique in that they are brought about through group action of essentially small entities acting on their own behalf. Thus, both statutes have small entity orientation and compatability.

There are approximately 70 handlers of lemons grown in California and Arizona subject to regulation under the lemon marketing order and approximately 2,000 lemon producers in the regulated area. Small agricultural producers have been defined by the Small Business Administration (13 CFR 121.2) as those having annual receipts of less than $500,000, and small agricultural service firms are defined as those whose annual receipts are less than $3,500,000. The majority of handlers and producers of California-Arizona lemons may be classified as small entities.

The California-Arizona lemon industry is characterized by a large number of growers located over a wide area. The production area is divided into three districts which span California and Arizona. The Committee estimates District 1, central California, 1990-91 production at 6,200 cars compared to the 4,153 cars produced in 1989-90. In District 2, southern California, the crop is expected to be 24,700 cars compared to the 23,941 cars produced last year. In District 3, the California desert and Arizona, the Committee estimates a production of 8,400 cars compared to the 9,435 cars produced last year. The Committee's estimate of 1990-91 production is 39,300 cars (one car equals 1,000 cartons at 38 pounds net weight each), as compared with 37,500 cars during the 1989-90 season. The National Agricultural Statistics Service will publish on October 11, 1990, an estimate of the 1990-91 lemon crop.

The three basic outlets for California-Arizona lemons are the domestic fresh, export, and processing markets. The domestic (regulated) fresh market is a preferred market for California-Arizona lemons. The Committee estimates that about 44 percent of the 1990-91 crop of 39,300 cars will be utilized in fresh domestic channels (17,340 cars), compared with the 1989-90 total of 16,500 cars, about 44 percent of the total production of 37,500 cars in 1989-90. Fresh exports are projected at 22 percent of the total 1990-91 crop utilization compared with 22 percent in 1989-90. Processed and other uses would account for the residual 34 percent compared with 34 percent of the 1989-90 crop.

Volume regulations issued under the authority of the Act and Marketing Order No. 910 are intended to provide benefits to growers and consumers. Reduced fluctuations in supplies and prices result from regulating shipping levels and contribute to a more stable market. The intent of regulation is to achieve a more even distribution of lemons in the market throughout the marketing season and to avoid unreasonable fluctuations in supplies and prices.

Based on the Committee's marketing policy, the crop and market information provided by the Committee, and other information available to the Department, the costs of implementing the regulations are expected to be more than offset by the potential benefits of regulation.

Reporting and recordkeeping requirements under the lemon marketing order are required by the Committee from handlers of lemons. However, handlers in turn may require individual growers to utilize certain reporting and recordkeeping practices to enable handlers to carry out their functions. Costs incurred by handlers in connection with recordkeeping and reporting requirements may be passed on to growers.

The Committee submitted its marketing policy for the 1990-91 season to the U.S. Department of Agriculture (Department) on June 19. The marketing policy discussed, among other things, the potential use of volume and size regulations for the ensuring season. The Committee considered the use of volume regulation for the season. This marketing policy is available from the Committee or Ms. Rodriguez. The Department reviewed that policy with respect to administrative requirements and regulatory alternatives in order to determine if the use of volume regulations would be appropriate.

The Committee met publicly on July 31, 1990, in Los Angeles, California, to consider the current and prospective conditions of supply and demand. Based on the Committee's recommendation, the price/parity relationship for the current season, and other information, a total of 331,000 cartons is the quantity of

lemons deemed advisable to be shipped to fresh domestic markets during the specified week. The marketing information and data provided to the Committee were compiled by the Committee's staff or presented by Committee members at the meeting. This information included, but was not limited to, price data for the previous week from Department market news reports and other sources, the preceding week's shipments and shipments to date, crop conditions, weather and transportation conditions, and a reevaluation of the prior week's recommendation in view of the above.

The Department reviewed the Committee's recommendation in light of the projections as set forth in its 1990–91 marketing policy. The amount of lemons deemed advisable to be shipped to fresh domestic markets is 11,000 cartons above the estimated projections in the shipping schedule.

During the week ending on July 28, 1990, shipments of lemons to fresh domestic markets, including Canada, totaled 311,000 cartons compared with 320,000 cartons shipped during the week ending on July 29, 1989. Export shipments totaled 145,000 cartons compared with 160,000 cartons shipped during the week ending on July 29, 1989. Processing and other uses accounted for 236,000 cartons compared with 161,000 cartons shipped during the week ending on July 29, 1989.

Fresh domestic shipments to date for the 1989–90 season total 16,600,000 cartons compared with 16,451,000 cartons shipped by this time during the 1988–89 season. Export shipments total 7,678,000 cartons compared with 8,214,000 cartons shipped by this time during 1988–89. Processing and other use shipments total 12,770,000 cartons compared with 15,734,000 cartons shipped by this time during 1988–89.

For the week ending on July 28, 1990, regulated shipments of lemons to the fresh domestic market were 311,000 cartons on an adjusted allotment of 418,000 cartons which resulted in net undershipments of 107,000 cartons. Regulated shipments for the current week (July 29 through August 4, 1990) are estimated at 330,000 cartons on an adjusted allotment of 429,000 cartons. Thus, undershipments of 99,000 cartons could be carried over into the week ending on August 11, 1990.

The average f.o.b. shipping price for the week ending on July 28, 1990, was $14.40 per carton based on a reported sales volume of 321,000 cartons compared with last week's average of $14.67 per carton on a reported sales volume of 356,000 cartons. The 1989–90 season average f.o.b. shipping point price to date is $13.58 per carton. The average f.o.b. shipping point price for the week ending on July 29, 1989, was $14.82 per carton; the season average f.o.b. shipping point price at this time during 1988–89 was $12.37 per carton.

The Department's Market News Service reported that, as of July 30, demand for lemons of all sizes and grades is moderate. The market is "about steady" for all grades and sizes of lemons. At the meeting, one Committee member characterized the movement of large-sized fruit (140's and larger) as fairly good and that movement has "slowed" for lemons of all other sizes and grades due to competition from Florida fruit and fruit from the Bahamas. Another Committee member commented on the relatively high level of small-sized lemons in storage and the need to move that fruit in an orderly fashion. Cases of "sour rot" and decay continue to occur which affect lemons in storage that result in problems with fruit quality on arrival to terminal markets. The Committee unanimously recommended volume regulation for the period from August 5 through August 11, 1990.

Based upon fresh utilization levels indicated by the Committee and an econometric model developed by the Department, the California-Arizona 1990–91 season average fresh on-tree price is estimated at $9.76 per carton, 119 percent of the projected season average fresh on-tree parity equivalent price of $8.20 per carton. The California-Arizona 1989–90 season average fresh on-tree price is estimated at $8.53, 114 percent of the projected season average fresh on-tree parity equivalent price of $7.47 per carton.

Limiting the quantity of lemons that may be shipped during the period from August 5 through August 11, 1990, would be consistent with the provisions of the marketing order by tending to establish and maintain, in the interest of producers and consumers, an orderly flow of lemons to market.

Based on considerations of supply and market conditions, and the evaluation of alternatives to the implementation of this volume regulation, it is found that this action will tend to effectuate the declared policy of the Act.

Based on the above information, the Administrator of the AMS has determined that issuance of this rule will not have a significant economic impact on a substantial number of small entities.

Pursuant to 5 U.S.C. 553, it is further found and determined that it is impracticable, unnecessary, and contrary to the public interest to give preliminary notice, and engage in further public procedure with respect to this action and that good cause exists for not postponing the effective date of this action until 30 days after publication in the **Federal Register**. This is because there is insufficient time between the date when information became available upon which this regulation is based and the effective date necessary to effectuate the declared policy of the Act.

In addition, market information needed for the formulation of the basis for this action was not available until July 31, 1990, and this action needs to be effective for the regulatory week which begins on August 5, 1990. Further, interested persons were given an opportunity to submit information and reviews on the regulation at an open meeting, and handlers were apprised of its provisions and effective time. It is necessary, therefore, in order to effectuate the declared purposes of the Act, to make this regulatory provision effective as specified.

List of Subjects in 7 CFR Part 910

Lemons, Marketing agreements, and Reporting and recordkeeping requirements.

For the reasons set forth in the preamble, 7 CFR part 910 is amended as follows:

1. The authority citation for 7 CFR part 910 continues to read as follows:

Authority: Secs. 1–19, 48 Stat. 31, as amended; 7 U.S.C. 601–674.

PART 910—LEMONS GROWN IN CALIFORNIA AND ARIZONA

2. Section 910.729 is added to read as follows:

Note: This section will not appear in the Code of Federal Regulations.

§ 910.729 Lemon Regulation 729.

The quantity of lemons grown in California and Arizona which may be handled during the period from August 5 through August 11, 1990, is established at 331,000 cartons.

Dated: August 2, 1990.

Robert C. Keeney,

Deputy Director, Fruit and Vegetable Division.

[FR Doc. 90–18463 Filed 8–3–90; 8:45 am]

BILLING CODE 3410–02–M

FEDERAL RESERVE SYSTEM

12 CFR Part 226

[Reg. Z; Doc. No. R-0689]

Truth in Lending Determination of Effect on State Law (Wisconsin)

AGENCY: Board of Governors of the Federal Reserve System.

ACTION: Preemption determination.

SUMMARY: The Board is publishing in final form a determination as to the consistency with the Truth in Lending Act and Regulation Z of certain provisions in the law of Wisconsin. The provisions deal with disclosures for home equity plans and the right of a nonapplicant spouse to terminate a plan and a creditor to accelerate the outstanding balance. The Board has determined to preempt some of the state provisions.

EFFECTIVE DATE: October 1, 1991, with compliance optional before that date.

FOR FURTHER INFORMATION CONTACT: Sharon Bowman, Staff Attorney, Division of Consumer and Community Affairs, at (202) 452–3667. For the hearing impaired only, contact Earnestine Hill or Dorothea Thompson, Telecommunications Device for the Deaf (TDD), at (202) 452–3544, Board of Governors of the Federal Reserve System , Washington, DC 20551.

SUPPLEMENTARY INFORMATION:

(1) General.

Section 111(a)(1) of the Truth in Lending Act authorizes the Board to determine whether any inconsistency exists between chapters 1, 2, and 3 of the federal act or the implementing provisions of the regulation and state laws. Preemption determinations are issued under authority delegated to the Director of the Division of Consumer and Community Affairs, as set forth in the Board's Rules Regarding Delegation of Authority (12 CFR 265.2(h)(3)).

Preemption determinations have an effective date of the October 1 that follows the determination by at least six months, as required by section 105(d) of the act. As a result, this determination has an effective date of October 1, 1991, although compliance may begin before that time.

(2) Discussion of Specific Request and Final Determination

The Board was asked to determine whether specific provisions of the Wisconsin Statutes regarding disclosures for open-end credit plans and the ability of a nonapplicant spouse to terminate an open-end credit plan are inconsistent with amendments to Regulation Z (12 CFR 226.5b) that regulate disclosure and substantive provisions of open-end credit plans secured by a consumer's dwelling. The requesting party asked whether provisions of Wisconsin Statutes section 422.308, requiring certain disclosures to be given in a certain manner for open-end credit plans, including home equity plans, are preempted by § 226.5b (a) and (d) of Regulation Z. The requesting party also questioned whether Wisconsin Statutes section 766.565(5), part of Wisconsin's Marital Property Act, is preempted by § 226.5b(f)(3) of Regulation Z. (After a review of the state and federal provisions, the Board determined that the more appropriate analysis is a comparison of the state law with § 226.5b(f)(2) of Regulation Z.) the state provision permits the non-obligor spouse of a consumer who opens an open-end credit plan to terminate the plan by giving written notice to the creditor. Creditors, in turn, are permitted to include in their open-end credit agreements a provision authorizing them to declare the account balance due and payable upon receiving this notice.

The Board published a proposed determination on April 10, 1990 (55 FR 13282). In regard to the disclosures for open-end home equity plans required at application under state and federal law, the Board proposed to determine that in cases where the amount of the annual percentage rate (APR) disclosed to consumers under state law differs from the amount that would be disclosed under federal law, the state disclosure is preempted. The Board proposed to determine that the remaining state disclosures, as well as a state law provision requiring that disclosures be set forth on the application for open-end credit, are not preempted. The Board also proposed a determination that the provison under Wisconsin law that permits a non-obligor spouse of a consumer to terminate a home equity plan is not preempted, but that the provision permitting a creditor to accelerate the outstanding balance in such cases is preempted by federal law.

The Board received three comments on the proposed determination. Two of the commenters, representing Federal Reserve Banks, agreed with the Board's proposed determination. One commenter, representing a Wisconsin bank holding company, objected to the Board's proposed determination to preempt the state law provision that permits a creditor to accelerate a home equity plan when a non-obligor spouse terminates the plan. After careful review, the Board has made a final determination confirming its proposal regarding the state law provisions at issue for the reasons discused below.

In regard to the APR disclosed to consumers at application, while state law does not define "annual percentage rate," it does define "finance charge" in Wisconsin Statutes section 421.301(20) to include charges other than interest. (See the notice of proposed preemption determination for a more detailed discussion of the state provision.) While the definition of "finance charge" under federal law also includes charges other than interest, the APR creditors are required to state in the disclosures given at application for home equity plans does not include costs other than interest. (See § 226.5b (d)(6) and (d)(12)(ii) of Regulation Z, which requires an explicit statement that the disclosed APR does not include costs other than interest.) Other than the state law's definition of "fnance charge," there is nothing to suggest at the APR disclosed under Wisconsin law would ever in fact differ from the APR disclosed under Federal law. Since the possibility does exist, however, the Board has determined that in cases where the amount of the APR disclosed to consumers under state law differs from the amount that would be disclosed under federal law, the state disclosure is preempted, since in those cases the state law requires the use of the same term as the federal law to represent a different amount than the federal law.

The Board has determined that the remaining state disclosures as well as the format requirement for such disclosures do not contradict federal law and are not preempted since a creditor can comply with both the state and federal provisions and the requirement of additional or different information is not by itself inconsistent with federal law. (See the notice of proposed preemption determination for further detail on the sections reviewed by the Board.)

In regard to the provision in Wisconsin Statutes section 766.565(5) that permits a non-obligor spouse to terminate and a creditor to accelerate a home equity plan, the Board noted in its proposal that a strict application of the federal preemption standards to the state law would suggest that the entire state provision is inconsistent with the federal law, but that valid reasons exist for not preempting the right of a nonapplicant spouse to terminate a plan. These include Wisconsin's declared interest in protecting certain marital property rights by effectively deeming a non-obligor spouse to be a "consumer" specifically for purposes of terminating

an open-end credit plan; and the fact that precedent exists under Regulation Z (in the rescission rules) for deeming a non-incurring person who has an ownership interest in the property that secures a plan to be a "consumer" and thus able to terminate a plan.

A similar basis cannot be found for permitting a creditor to interfere with the operation of the federal scheme by accelerating the outstanding balance in such cases. The one commenter who objected to the Board's preempting this provision questioned whether a creditor would be acting "unilaterally" since it would be accelerating in response to a spouse's terminating the plan. The statutory and regulatory restrictions on creditors' actions, however, are designed to protect the borrower from adverse results except in limited circumstances, and the spouse's involvement does not change that purpose. (As the commenter also indicated, other avenues are provided under § 226.5b(f)(2) of Regulation Z that would permit creditors to terminate and accelerate a home equity plan without the borrower's agreement.)

While the Board believes a valid basis exists for elevating a spouse to the status of a "consumer" and thus able to terminate a home equity plan, a creditor still may not automatically accelerate a plan in circumstances not provided for under the federal regulation. The Board has determined, therefore, that the provision under Wisconsin Statutes section 766.565(5) that permits a non-obligor spouse to terminate a home equity plan is not preempted. The provision, however, permitting a creditor to accelerate the outstanding balance in such cases is inconsistent with the purpose of the federal law and is therefore preempted.

Lists of Subjects in 12 CFR Part 226

Advertising; Banks; Banking; consumer protection; Credit; Federal Reserve System; Finance; Penalties; Rate limitations; Truth in Lending.

(3) Preemption determination

The following order sets forth the preemption determination, which also will be reflected in the Official Staff Commentary on Regulation Z (Supplement I to part 226).

Order

Pursuant to section 111 of the federal Truth in Lending Act, 15 U.S.C. 1610, the Board has determined that certain provisions in the law of Wisconsin are inconsistent with and therefore preempted by the federal law. The determination is as follows:

Preemption determination—Wisconsin. Effective October 1, 1991, the following provisions in the state law of Wisconsin are prempted by the federal law:

In Wisconsin Statutes section 422.308(1), the disclosure of the annual percentage rate in cases where the amount of the annual percentage rate disclosed to consumers under the state law differs from the amount that would be disclosed under federal law, since in those cases the state law requires the use of the same term as the federal law to represent a different amount than the federal law.

In Wisconsin Statutes section 766.565(5), the provision permitting a creditor to include in an open-end home equity agreement authorization to declare the account balance due and payable upon receiving notice of termination from a non-obligor spouse pursuant to that subsection, since such provision is inconsistent with the purpose of the federal law.

Board of Governors of the Federal Reserve System, July 31, 1990.

William W. Wiles,

Secretary of the Board.

[FR Doc. 90-18235 filed 8-3-90; 8:45 am]

BILLING CODE 6210-01-M

DEPARTMENT OF TRANSPORTATION

Federal Aviation Administration

14 CFR Part 39

[Docket No. 88-ASW-43; Amdt. 39-6341]

Airworthiness Directives; McDonnell Douglas Helicopter Company (MDHC) Model 369D, E, F, and FF Helicopters

AGENCY: Federal Aviation Administration (FAA), DOT.

ACTION: Correction to final rule.

SUMMARY: This notice corrects the amendatory instruction in the correction to the AD previously published in the **Federal Register** (55 FR 29351, July 19, 1990) on McDonnell Douglas Model 369D, E, F, and FF helicopters. The amendatory instruction, which appears on page 29352, should read as follows: 2. Section 39.13 is amended by correcting paragraph (d) of Amendment 39-6051 (54 FR 105, January 4, 1989), AD 89-02-01, as amended by Amendment 39-6341 (54 FR 40382, October 2, 1989) as follows:

FOR FURTHER INFORMATION CONTACT: Mr. Sol Davis, Aerospace Engineer, Airframe Branch, ANM-123L, Northwest Mountain Region, Los Angeles Aircraft Certification Officer, 3229 E. Spring Street, Long Beach, California 90806-2425, telephone (213) 988-5233.

Issued in Forth Worth, Texas, on July 27, 1990.

Henry A. Armstrong,

Acting Manager, Rotorcraft Directorate, Aircraft Certification Service.

[FR Doc. 90-18257 Filed 8-3-90; 8:45 am]

BILLING CODE 4910-13-M

14 CFR Part 39

[Docket No. 89-NM-198-AD; Amendment 39-6613]

Airworthiness Directives; McDonnell Douglas Model DC-10 Series Airplanes

AGENCY: Federal Aviation Administration (FAA), DOT.

ACTION: Final rule.

SUMMARY: This amendment adopts a new airworthiness directive (AD), applicable to McDonnell Douglas Model DC-10 series airplanes, which requires certain structural modifications and some inspections. This amendment is prompted by reports of recent incidents involving fatigue cracking and corrosion in transport category airplanes that are approaching or have exceeded their economic design goal. These incidents have jeopardized the airworthiness of the affected airplanes. This condition, if not corrected, could result in a degradation in the structural capabilities of the affected airplanes. This action also reflects the FAA's decision that long term continued operational safety should be assured by actual modification of the airframe, where feasible, rather than only repetitive inspections for known service problems.

DATES: Effective September 10, 1990. The incorporation by reference of certain publications listed in the regulation is approved by the Director of the Federal Register as of September 10, 1990.

ADDRESSES: The applicable service information may be obtained from McDonnell Douglas Corporation, 3855 Lakewood Boulevard, Long Beach, California 90806, Attention: Director, Publication and Training, C1-750 (54-60). This information may be examined at the FAA, Northwest Mountain Region, Transport Airplane Directorate, 17900 Pacific Highway South, Seattle, Washington; at the Los Angeles Aircraft Certification Office, 3229 East Spring Street, Long Beach, California; or at the Office of the Federal Register, 1100 L Street NW., room 8301, Washington, DC.

FOR FURTHER INFORMATION CONTACT: Ms. Dorenda Baker, Aerospace

Engineer, Los Angeles Aircraft Certification Office, Airframe Branch, ANM–120L, 3229 East Spring Street, Long Beach, California 90806–2425; telephone (213) 988–5231.

SUPPLEMENTARY INFORMATION: A proposal to amend part 39 of the Federal Aviation Regulations to include an airworthiness directive, applicable to McDonnell Douglas Model DC–10 series airplanes, which requires certain structural modifications and some inspections, was published in the Federal Register on September 26, 1989 (54 FR 39411).

Interested persons have been afforded an opportunity to participate in the making of this amendment. Due consideration has been given to the comments received.

One commenter suggested that the term "discrepancy" replace the term "crack," since the inspections contained in the service bulletins listed in the "DC–10/KC–10 Aging Aircraft Service Action Requirements Document" are expected to detect corrosion and wear in addition to cracking. The FAA does not concur. The FAA considers that the substitution of the term "discrepancy" would expand the scope of the AD. The intent of this rule is to address the degradation in the structural capabilities as a result of known fatigue cracking. If corrosion and wear are found during the inspections mandated by this AD, normal maintenance procedures governed by existing regulations which require appropriate corrective action will ensure the airworthiness of the airplane. The FAA has included a note in the final rule to advise the operators of their responsibility under existing regulations.

One commenter provided clarifying information on the economic impact of the proposed rule. This information has been incorporated into this preamble and the economic impact evaluation in the regulatory docket has been revised. However, the original estimated costs have not changed, only the manner in which they are presented.

Three commenters noted that the proposed rule called for inspections that have not as yet been defined by the manufacturer's service bulletins. They further requested that they have an opportunity to review and/or comment on the inspections and the revised service bulletins before they are mandated by airworthiness directive. The FAA agrees. The FAA has revised the final rule to mandate only those service bulletins whose inspections were defined at the time of publication of the proposed rule and those service bulletins for which McDonnell Douglas records show 100% compliance on the terminating modification. McDonnell Douglas has scheduled verification of their inspection techniques for the outstanding items to be completed by July 1990, and intends to revise McDonnell Douglas Report MDC–K1571 to include the revised service bulletins (approximately 10 additional bulletins). At that time, the FAA will consider further rulemaking to address that revised document, and allow an opportunity for the public to review and/or comment on any proposed new inspections related to the revises service bulletins.

One commenter expressed concern over FAA's ability to respond to requests for alternate means of compliance; however, no instances where this had been a problem were cited. The FAA considers the existing regulations, policies, and procedures, as well as current manpower and expertise, to be adequate for responding to requests for alternate means of compliance with this airworthiness directive in a timely manner.

One commenter suggested that FAA Designated Engineering Representatives (DER) at the manufacturer's facility be allowed to approve certain alternative means of compliance to this AD. The FAA does not concur. Airworthiness directives are a primary responsibility of the FAA, and alternate means of compliance must be approved by the Manager, Los Angeles Aircraft Certification Office. This function cannot be delegated to a DER. While DER's are authorized to determine whether an alternate design complies with a specific requirement, they are not authorized to make discretionary determinations regarding the applicable requirements.

One commenter requested that the rule be revised to allow operators to perform minor deviations without prior approval of the Manager, Los Angeles Aircraft Certification Office. The FAA does not concur, because what is "minor" is open to interpretation. The FAA must continue to approve all deviations.

The "DC–10/KC–10 Aging Aircraft Service Action Requirements Document," McDonnell Douglas Report No. MDC–K1571, dated September 1989, identified in the Notice of Proposed Rulemaking (NPRM) has been revised to: (1) Change the calendar date of December 31, 1993, to four years from the effective date of the AD; (2) update service bulletin revision numbers; (3) correct the effectivity block for two service bulletins; and (4) move those service bulletins whose inspections were not defined at the time of publication of the proposed rule to Table 2.2. The FAA has determined that these changes have no substantial affect on the technical content of the report, and has revised the final rule to reflect "DC–10/KC–10 Aging Aircraft Service Action Requirements Document," McDonnell Douglas Report No. MDC–K1571, Revision A, dated February 28, 1990, as the appropriate service information document.

The FAA recognizes that the aging fleet program will need to be periodically updated as new data is made available. At such time the FAA may consider additional rulemaking to provide for new or revised service bulletins with accompanying changes to inspection times and methods and/or, to provide for alternate means of compliance.

After careful review of the available data, including the comments noted above, the FAA has determined that air safety and the public interest require the adoption of the rule as proposed with the changes previously described. The FAA has determined that these changes will neither increase the economic burden on any operator nor increase the scope of the AD.

There are approximately 426 Model DC–10 series airplanes of the affected design in the worldwide fleet. It is estimated that 194 airplanes of U.S. registry will be affected by this AD within the initial threshold of 4 years.

Many of the affected airplanes have previously accomplished various modifications that would be required by this AD. The manufacturer has advised the FAA that, based on the modification status of the U.S. fleet, a realistic average cost per airplane is $24,000. This figure includes $9,600 per airplane for the modification kits, and $14,400 per airplane for labor to accomplish the required service actions (360 manhours per airplane at a labor cost of $40 per manhour). Based on these figures, the total cost impact of the AD on U.S. operators is estimated to be $4,656,000 over the initial 4-year time period. It does not include the cost of inspections, downtime, planning, set-up, familiarization, or tool acquisition costs.

Additional airplanes will be affected as they accumulate time-in-service and reach the threshold for modification.

The regulations adopted herein will not have substantial direct effects on the States, on the relationship between the national government and the States, or on the distribution of power and responsibilities among the various levels of government. Therefore, in accordance with Executive Order 12612, it is determined that this final rule does not

have sufficient federalism implications to warrant the preparation of a Federalism Assessment.

For the reasons discussed above, I certify that this action (1) is not a "major rule" under Executive Order 12291; (2) is not a "significant rule" under DOT Regulatory Policies and Procedures (44 FR 11034, February 26, 1979); and (3) will not have a significant economic impact, positive or negative, on a substantial number of small entities under the criteria of the Regulatory Flexibility Act. A final evaluation has been prepared for this action and is contained in the regulatory docket. A copy of it may be obtained from the Rules Docket.

List of Subjects in 14 CFR Part 39

Air transportation, Aircraft, Aviation safety, Safety, Incorporation by reference.

Adoption of the Amendment

Accordingly, pursuant to the authority delegated to me by the Administrator, the Federal Aviation Administration amends 14 CFR part 39 of the Federal Aviation Regulations as follows:

PART 39—[AMENDED]

1. The authority citation for part 39 continues to read as follows:

Authority: 49 U.S.C. 1354(a), 1421 and 1423; 49 U.S.C. 106(g) (Revised Pub. L. 97–449, January 12, 1983); and 14 CFR 11.89.

§ 39.13 [Amended]

2. Section 39.13 is amended by adding the following new airworthiness directive:

McDonnell Douglas: Applies to Model DC–10 and KC–10 series airplanes, certificated in any category. Compliance required as indicated, unless previously accomplished.

To prevent structural failure, accomplish the following:

A. Except as provided in paragraph C., below, within the threshold for inspections specified in the service bulletins listed in Table 2.1 of "DC–10/KC–10 Aging Aircraft Service Action Requirements Document," McDonnell Douglas Report No. MDC–K1571, Revision A, dated February 28, 1990 (hereafter referred to as "The Document"), or within one repetitive inspection period specified in those service bulletins after the effective date of this AD, whichever is later, inspect for cracks in accordance with those service bulletins. Repeat these inspections at intervals specified in the service bulletins listed in Table 2.1 of The Document.

1. If cracks are found during any inspection, prior to further flight, either accomplish the terminating modification in accordance with the applicable service bulletin, or repair in accordance with data approved by the Manager, Los Angeles Aircraft Certification Office, FAA, Northwest Mountain Region.

Note: Detection of discrepancies other than cracking necessitates appropriate corrective action in accordance with the provisions of part 43 of the Federal Aviation Regulations (FAR).

2. Modification in accordance with paragraph B. of this AD terminates individual inspection requirements of the applicable service bulletin.

B. Except as provided in paragraph C., below, prior to reaching the incorporation thresholds listed in The Document or within the next 4 years after the effective date of this AD, whichever occurs later, accomplish the structural modifications specified in the service bulletins listed in Table 2.1 of The Document.

Note: The modifications required by this paragraph do not terminate the inspection requirements of any other AD unless that AD specifies that any such modification constitutes terminating action for the inspection requirements.

C. For McDonnell Douglas Service Bulletins A30–37, 30–38, 53–16, 53–19, 53–25, 54–11, 54–27, 54–33, 55–2, and 57–7, listed in Table 2.1 of The Document, within the threshold for inspections listed in Table 2.1 of The Document under "S/B Change Required" or within one repetitive inspection period specified in Table 2.1 of The Document under "S/B Change Required" after the effective date of this AD, whichever is later, inspect for cracks in a manner approved by the Manager, Los Angeles Aircraft Certification Office. Repeat these inspections at intervals specified in Table 2.1 of The Document under "S/B Change Required."

1. If cracks are found during any inspection, prior to further flight, either accomplish the terminating modification in accordance with the applicable service bulletin, or repair in accordance with data approved by the Manager, Los Angeles Aircraft Certification Office, FAA, Northwest Mountain Region.

2. Modification in accordance with paragraph D., of this AD terminates individual inspection requirements of the applicable service bulletin.

D. Within 4 years after the effective date of this AD accomplish the structural modifications stipulated in the service bulletins specified in paragraph C., above.

E. An alternative means of compliance or adjustment of the compliance time which provides an acceptable level of safety, may be used when approved by the Manager, Los Angeles Certification Office, FAA, Northwest Mountain Region.

Note: The request should be forwarded through an FAA Principal Maintenance Inspector (PMI), who will either concur or comment, and then send it to the Manager, Los Angeles Certification Office.

F. Special flight permits may be issued in accordance with FAR 21.197 and 21.199 to operate airplanes to a base in order to comply with the requirements of this AD.

The inspections and modifications shall be done in accordance with "DC–10/KC–10 Aging Aircraft Service Action Requirements Document," McDonnell Douglas Report MDC K1571, Revision A, dated February 28, 1990, which incorporates the following list of effective pages:

Page No.	Revision	Date
i	A	Feb. 28, 1990.
ii, iii–vi	Original	Sept. 12, 1989 removed.
vii–viii	Original	Sept. 12, 1989.
1	Original	Sept. 12, 1989.
2	A	Feb. 28, 1990.
3	Original	Sept. 12, 1989.
4–15	A	Feb. 28, 1990.
16	Original	Sept. 12, 1989.
17–20	A	Feb. 28, 1990.
21–22	Original	Sept. 12, 1989.
23	A	Feb. 28, 1990.

This incorporation by reference was approved by the Director of the Federal Register in accordance with 5 U.S.C. 552(a) and 1 CFR part 51. Copies may be obtained from McDonnell Douglas Corporation, 3855 Lakewood Boulevard, Long Beach, California 90806, Attention: Director, Publication and Training, C1–750 (54–60). Copies may be inspected at the FAA, Northwest Mountain Region, Transport Airplane Directorate, 17900 Pacific Highway South, Seattle, Washington; at the Los Angeles Aircraft Certification Office, 3229 East Spring Street, Long Beach, California; or at the Office of the Federal Register, 1100 L Street NW., room 8301, Washington, DC.

This amendment becomes effective September 10, 1990.

Issued in Seattle, Washington, on June 4, 1990.

Leroy A. Keith,

Manager, Transport Airplane Directorate, Aircraft Certification Service.

[FR Doc. 90–18254 Filed 8–3–90; 8:45 am]

BILLING CODE 4910–13–M

14 CFR Part 39

[Docket No. 89–NM–196–AD; Amdt. 39–6614]

Airworthiness Directives; McDonnell Douglas Model DC–8 Series Airplanes

AGENCY: Federal Aviation Administration (FAA), DOT.

ACTION: Final rule.

SUMMARY: This amendment adopts a new airworthiness directive (AD), applicable to McDonnell Douglas Model DC–8 series airplanes, which requires certain inspections and structural modifications. This amendment is prompted by reports of recent incidents involving fatigue cracking, corrosion, and stress corrosion cracking in transport category airplanes that are approaching or have exceeded their economic design goal. These incidents have jeopardized the airworthiness of

the affected airplanes. This condition, if not corrected, could result in a degradation of the structural capabilities of the affected airplanes. This action also reflects the FAA decision that long term continued operational safety should be assured by actual modification of the airframe, where feasible, rather than only by repetitive inspections for known service problems.

DATES: Effective September 10, 1990. The incorporation by reference of certain publications listed in the regulations is approved by the Director of the Federal Register as of September 10, 1990.

ADDRESSES: The applicable service information may be obtained from McDonnell Douglas Corporation, 3855 Lakewood Boulevard, Long Beach, California 90846–0001, Attention: Director, Publication and Training, C1–750 (54–60). This information may be examined at the FAA, Northwest Mountain Region, Transport Airplane Directorate, 17900 Pacific Highway South, Seattle, Washington; at the Los Angeles Aircraft Certification Office, 3229 East Spring Street, Long Beach, California; or at the Office of the Federal Register, 1100 L Street NW., room 8301, Washington, DC.

FOR FURTHER INFORMATION CONTACT: Mr. John L. Cecil, Aerospace Engineer, Airframe Branch, ANM–120L, Los Angeles Aircraft Certification Office, 3229 East Spring Street, Long Beach, California, telephone (213) 988–5322.

SUPPLEMENTARY INFORMATION: A proposal to amend part 39 of the Federal Aviation Regulations to include an airworthiness directive, applicable to McDonnell Douglas Model DC–8 series airplanes, which requires certain inspections and structural modifications, was published in the **Federal Register** on September 26, 1989 (54 FR 39406).

Interested persons have been afforded an opportunity to participate in the making of this amendment. Due consideration has been given to the comments received.

One commenter proposed that the control columns listed in Service Bulletin 27–267, specified in the referenced McDonnell Douglas Report No. K1579, Revision New, dated September 12, 1989 (hereinafter referrred to as "the McDonnell Douglas report"), be replaced at the next airframe overall ("D" Check) or four years, whichever is later, rather than by December 31, 1991, as specified in the McDonnell Douglas report. The commenter stated that existing means were in place with Airworthiness Directive 89–08–01, Amendment 39–6178 (54 FR 13163, March 31, 1989), to detect damage prior to the occurrence of an unsafe condition. The FAA disagrees. The intent of this rulemaking action is to ensure long term operational safety by actual modification of the airframe, rather than by repetitive inspections. Any specific extension of the calendar times specified in the McDonnell Douglas report can be evaluated as an alternate means of compliance.

Another commenter stated that some of the service bulletins referenced in the McDonnell Douglas report do not have inspection frequencies and procedures included in them. The commenter recommended that either the rule be revised to exclude any references to those inspection tasks, or that the McDonnell Douglas report be revised to include them. Alternately, the same commenter suggested that the FAA withhold issuance of action on this rule until all service bulletins listed in the McDonnell Douglas report have been revised to include inspection options, procedures, and frequencies. The FAA disagrees. The service bulletins listed in the McDonnell Douglas report do have inspection frequencies and procedures. While it is true that some of the service bulletins and associated airworthiness directives do not list a terminating action, an adequate level of safety has been established by the inspections referenced in the McDonnell Douglas report. However, the FAA may consider further rulemaking to address revised inspections or terminating actions as they are developed.

This same commenter stated that there is conflicting information in two of the service bulletins listed in the McDonnell Douglas report. Specifically, Service Bulletin 57–83, Revision 4, recommends inspection of an area at 100,000 flight hours, while Service Bulletin 57–84, Revision 2, recommends modification of the same structure at 94,000 flight hours. This commenter requested that these inconsistencies be reviewed before adoption of the proposed rule. The FAA has reviewed the service bulletins and disagrees that an inconsistency exists. Service Bulletin 57–83 describes inspections of the lower wing skin and lower part of the front spar; Service Bulletin 57–84 describes modification of the lower wing skins at the pylons. These service bulletins consider two different, separate components of the aircraft structure; as such, the FAA finds no conflicting information. The incorporation thresholds for both of these service bulletins, as described in the McDonnell Douglas report, must be observed when complying with this final rule.

Another commenter expressed concern over FAA's ability to respond to requests for alternate means of compliance; however, no instances where this had been a problem were cited. The FAA considers the existing regulations, policies, and procedures, as well as current manpower and expertise, to be adequate for responding to requests for alternate means of compliance with this airworthiness directive in a timely manner.

The same commenter suggested that FAA Designated Engineering Representatives (DER) at the manufacturer's facility be allowed to approve certain alternate means of compliance to this AD. The FAA does not concur. Airworthiness Directives are a primary responsibility of the FAA, and alternate means of compliance must be approved by the Manager, Los Angeles Aircraft Certification Office. This function cannot be delegated to a DER. While DER's are authorized to determine whether an alternate design complies with a specific requirement, they are not authorized to make discretionary determinations regarding the applicable requirements.

The same commenter requested that the rule be revised to allow operators to perform minor deviations without prior approval of the Manager, Los Angeles Aircraft Certification Office. The FAA does not concur, because what is "minor" is open to interpretation. The FAA must continue to approve all deviations.

Another commenter suggested that the term "discrepancies" replace the term "cracks," since the proposed inspections are expected to detect corrosion and wear in addition to cracking. The FAA disagrees. The FAA considers that the substitution of the term "discrepancy" would expand the scope of this AD. The intent of this rule is to address the degradation in the structural capabilities as a result of known fatigue cracking. If corrosion and wear are found during the inspections mandated by this AD, normal maintenance procedures governed by existing regulations which require appropriate corrective action will ensure the airworthiness of the airplane. The FAA has included a note in the final rule to advise the operators of their responsibility under existing regulations.

The same commenter suggested that the wording in proposed paragraph A. be changed from, "Within three years after the effective date, unless previously accomplished within the last year, perform inspections for cracks in accordance with * * *," to "Within one repetitive inspection after the effective date of this AD, or at the inspection threshold, whichever is later (unless

currently being accomplished), begin performing inspections for discrepancies in accordance with * * *". The commenter reasoned that the revised wording provides an effectivity consistent with the criteria in the referenced McDonnell Douglas report. The FAA agrees. The FAA has made this substitution in the final rule.

Since issuance of the proposal, McDonnell Douglas has revised Report No. MDC K1579 to include revisions to certain of the specified service bulletins and updated the airplane effectivity. The FAA has determined that these changes have no substantial effect on the technical content of the report, and has revised the final rule to reflect McDonnell Douglas Report No. MDC K1579, Revision A, dated March 1, 1990, as the appropriate service information document.

The FAA recognizes that the aging fleet program will need to be periodically updated as new data is made available. At such time the FAA may consider additional rulemaking to provide for new or revised service bulletins with accompanying changes to inspection times and methods and/or to provide for alternate means of compliance.

After careful review of the available data, including the comments noted above, the FAA has determined that air safety and the public interest require the adoption of the rule as proposed with the changes previously described. The FAA has determined that these changes will neither increase the economic burden on any operator nor increase the scope of the AD.

There are approximately 339 Model DC-8 series airplanes of the affected design in the worldwide fleet. It is estimated that 218 airplanes of U.S. registry will be affected by this AD, that it will take approximately 234 manhours per airplane to accomplish the required actions, and that the average labor cost will be $40 per manhour. The cost to modify each airplane is estimated to be $9,260 over the initial 4-year time period. This cost represents $3,700 per airplane for the modification kits, and $5,560 per airplane for labor to accomplish the required service actions (139 manhours per airplane at an average labor cost of $40 per manhour). Based on these figures, the total cost impact of the AD on U.S. operators is estimated to be $4,059,160.

Additional airplanes will be affected as they accumulate time-in-service and reach the threshold for modification.

The regulations adopted herein will not have substantial direct effects on the States, on the relationship between the national government and the States, or on the distribution of power and responsibilities among the various levels of government. Therefore, in accordance with Executive Order 12612, it is determined that this final rule does not have sufficient federalism implications to warrant the preparation of a Federalism Assessment.

For the reasons discussed above, I certify that this action (1) is not a "major rule" under Executive Order 12291; is not a "significant rule" under DOT Regulatory Policies and Procedures (44 FR 11034, February 26, 1979); and (3) will not have a significant economic impact, positive or negative, on a substantial number of small entities under the criteria of the Regulatory Flexibility Act. A final evaluation has been prepared for this action and is contained in the regulatory docket. A copy of it may be obtained from the Rules Docket.

List of Subjects in 14 CFR Part 39

Air transportation, Aircraft, Aviation safety, Safety, Incorporation by reference.

Adoption of the Amendment

Accordingly, pursuant to the authority delegated to me by the Administrator, the Federal Aviation Administration amends part 39 of the Federal Aviation Regulations as follows:

PART 39—[AMENDED]

1. The authority citation for part 39 continues to read as follows:

Authority: 49 U.S.C. 1354(a), 1421 and 1423; 49 U.S.C. 106(g) (Revised Pub. L. 97-449, January 12, 1983); and 14 CFR 11.89.

§ 39.13 [Amended]

2. Section 39.13 is amended by adding the following new airworthiness directive:

McDonnell Douglas: Applies to Model DC-8 series airplanes, as listed in McDonnell Douglas Report No. MDC K1579, Revision A, dated March 1, 1990, certificated in any category. Compliance required as indicated, unless previously accomplished.

To prevent structural failure, accomplish the following:

A. Within one repetitive inspection interval specified in the service bulletins listed in Table 2.1 of "DC-8 Aging Aircraft Service Action Requirements Document", McDonnell Douglas Report MDC K1579, Revision A, dated March 1, 1990 (hereinafter referred to as "The Document") after the effective date of this AD, or at the inspection threshold specified in McDonnell Douglas Report No. MDC K1579, Revision A, dated March 1, 1990, whichever is later (unless currently being accomplished), begin performing inspections for cracks in accordance with the service bulletins listed in Table 2.1 of The Document. Repeat these inspections at intervals specified in the applicable service bulletins listed in Table 2.1 of The Document.

1. If cracks are found during any inspection, prior to further flight, either accomplish the terminating modification in accordance with the applicable service bulletin, or repair in accordance with data approved by the Manager, Los Angeles Aircraft Certification Office, FAA, Northwest Mountain Region.

Note: Detection of discrepancies other than cracking necessitates appropriate corrective action in accordance with the provisions of part 43 of the Federal Aviation Regulations (FAR).

2. Modification in accordance with paragraph B. of this AD terminates individual inspection requirements of the applicable service bulletin.

B. Except as provided below, prior to reaching the incorporation thresholds listed in The Document or within 4 years after the effective date of this AD, whichever occurs later, accomplish the structural modifications in accordance with the service bulletins listed in The Document. Modifications whose time for accomplishment is specified in The Document by a calendar date must be accomplished by that date in lieu of the 4 years specified in this paragraph.

Note: The modification required by this paragraph does not terminate the inspection requirements of any other AD unless that AD specifies that any such modification constitutes terminating action for the inspection requirements.

C. An alternative means of compliance or adjustment of the compliance time which provides an acceptable level of safety, may be used when approved by the Manager, Los Angeles Certification Office, FAA, Northwest Mountain Region.

Note: The request should be forwarded through an FAA Principal Maintenance Inspector (PMI), who will either concur or comment, and then send it to the Manager, Los Angeles Aircraft Certification Office.

D. Special flight permits may be issued in accordance with FAR 21.197 and 21.199 to operate airplanes to a base in order to comply with the requirements of this AD.

The inspections and modifications shall be done in accordance with "DC-8 Aging Aircraft Service Action Requirements Document," McDonnell Douglas Report MDC K1579, Revision A, dated March 1, 1990, which incorporates the following list of effective pages:

Page No.	Revision	Date
i	A	Mar. 1, 1990.
ii	Original	Sept. 12, 1989.
iii-vii	A	Mar. 1, 1990.
1-4	Original	Sept. 12, 1989.
5-12	A	Mar. 1, 1990.
13	Original	Sept. 12, 1989.
14-18	A	Mar. 1, 1990.
19	Original	Sept. 12, 1989.
20-21	A	Mar. 1, 1990.

This incorporation by reference was approved by the Director of the Federal

Register in accordance with 5 U.S.C. 552(a) and 1 CFR part 51. Copies may be obtained from McDonnell Douglas Corporation, 3855 Lakewood Boulevard, Long Beach, California 90846-0001, Attention: Director, Publication and Training, C1-750 (54-60). Copies may be inspected at the FAA, Northwest Mountain Region, Transport Airplane Directorate, 17900 Pacific Highway South, Seattle, Washington; or at the Los Angeles Aircraft Certification Office, 3229 East Spring Street, Long Beach, California; or at the Office of the Federal Register, 1100 L Street NW., Room 8301, Washington, DC.

This amendment becomes effective September 10, 1990.

Issued in Seattle, Washington, on June 4, 1990.

Leroy A. Keith,

Manager, Transport Airplane Directorate, Aircraft Certification Service.

[FR Doc. 90-18255 Filed 8-3-90; 8:45 am]

BILLING CODE 4910-13-M

---

14 CFR Part 39

[Docket No. 90-NM-117-AD; Amdt 39-6684]

Airworthiness Directives; McDonnell Douglas Models DC-9-81, DC-9-82, DC-9-83, DC-9-87, (MD-81, MD-82, MD-83, MD-87) and MD-88 series airplanes

AGENCY: Federal Aviation Administration (FAA), DOT.

ACTION: Final rule.

SUMMARY: This action publishes in the **Federal Register** and makes effective as to all persons an amendment adopting Airworthiness Directive (AD) T90-12-51, which was previously made effective as to all known U.S. owners and operators of McDonnell Douglas Models DC-9-81, DC-9-82, DC-9-83, DC-9-87 and MD-88 series airplanes by individual telegrams. This AD requires repetitive inspections of the through-bolt nut for proper torque and for condition of the through-bolt and the through-bolt nut. This action is prompted by reported instances of a loose through-bolt nut on the engine front mount upper and lower cone bolt through-bolt (attach bolt). This condition, if not corrected, could result in separation of the engine from aircraft.

DATES: Effective August 20, 1990, as to all persons except those persons to whom it was made immediately effective by telegraphic letter AD T90-12-51, issued May 30, 1990, which contained this amendment.

ADDRESSES: The applicable service information may be obtained from McDonnell Douglas Corporation, 3855 Lakewood Boulevard, Long Beach, California 90846, Attention: Business Unit Manager of Publications, C1-HCO (54-60). This information may be examined at the FAA, Northwest Mountain Region, Transport Airplane Directorate, 17900 Pacific Highway South, Seattle, Washington, or at the Los Angeles Aircraft Certification Office, 3229 East Spring Street, Long Beach, California.

FOR FURTHER INFORMATION CONTACT: Mr. David Hsu, Aerospace Engineer, Airframe Branch ANM-122L, FAA, Transport Airplane Directorate, Los Angeles Aircraft Certification Office, 3229 East Spring Street, Long Beach, California 90806-2425; telephone (213) 988-5323.

SUPPLEMENTARY INFORMATION: On May 24, 1990, the FAA issued telegraphic AD T90-11-52, applicable to McDonnell Douglas Models DC-9-81, DC-9-82, DC-9-83, DC-9-87 and MD-88 series airplanes, to require repetitive inspections of the left and right engine front mount upper and lower cone bolt through-bolt nut and replacement of each discrepant nut. Airplanes with engines having 2,000 or more flight hours since installation were required to be inspected within seven calendar days; airplane engines having less than 2,000 flight hours since installation were required to be inspected within thirty calendar days.

That action was prompted by reported instances of a loose through-bolt nut found on the engine front mount upper and lower cone bolt through-bolt (attach bolt). This condition may have been caused by a failure of the self-locking feature of the nut to properly retain the nut in position. This condition, if not corrected, could result in the nut coming off the through-bolt, thus allowing the through-bolt to migrate out of the engine mount flange and cone bolt. Loss of a through-bolt nut would cause an increased loading of the remaining engine attaching points, which may cause damage to the engine, cone bolts, and pylon, or possibly allowing separation of the engine from the aircraft.

After issuance of that AD, the FAA received a report of a loose nut on an engine with less than 204 flight hours since engine installation. The FAA then superseded AD T90-11-52 with a new telegraphic AD T90-12-51, which requires that airplanes with engines having accumulated less than 2,000 flight hours since installation be inspected within seven days. (Compliance remained the same as required by AD T90-11-52 for engines with 2,000 or more flight hours since installation.) If discrepancies are found, corrective actions are required to be taken in a manner prescribed by the AD. Additionally, operators are required to submit a report of their inspection findings to the FAA.

Since it was found that immediate corrective action was required, notice and public procedure thereon were impracticable and contrary to the public interest, and good cause existed to make the AD effective immediately by individual telegrams issued on May 30, 1990 to all known U.S. owners and operators of DC-9-80 and MD-88 series airplanes. These conditions still exist, and the AD is hereby published in the **Federal Register** as an amendment to § 39.13 of part 39 of the Federal Aviation Regulations (FAR) to make it effective as to all persons.

Information collection requirements contained in this regulation have been approved by the Office of Management and Budget (OMB) under the provisions of the Paperwork Reduction Act of 1980 (Pub. L. 96-511) and have been assigned OMB Control Number 2120-0056.

The regulations adopted herein will not have substantial direct effects on the States, on the relationship between the national government and the States, or on the distribution of power and responsibilities among the various levels of government. Therefore, in accordance with Executive Order 12612, it is determined that this final rule does not have sufficient federalism implications to warrant the preparation of a Federalism Assessment.

The Federal Aviation Administration has determined that this regulation is an emergency regulation and that it is not considered to be major under Executive Order 12291. It is impracticable for the agency to follow the procedures of Order 12291 with respect to this rule since the rule must be issued immediately to correct an unsafe condition in aircraft. It has been determined further that this document involves an emergency regulation under DOT Regulatory Policies and Procedures (44 FR 11034, February 26, 1979). If it is determined that this emergency regulation otherwise would be significant under DOT Regulatory Policies and Procedures, a final regulatory evaluation will be prepared and placed in the in the regulatory docket (otherwise, an evaluation is not required). A copy of it, if filed, may be obtained from the Rules Docket.

List of Subjects in 14 CFR Part 39

Air transportation, Aircraft, Aviation safety, Safety.

Adoption of the Amendment

Accordingly, pursuant to the authority delegated to me by the Administrator, the Federal Aviation Administration amends 14 CFR part 39 of the Federal Aviation Regulations as follows:

PART 39—[AMENDED]

1. The authority citation for part 39 continues to read as follows:

Authority: 49 U.S.C. 1354(a), 1421 and 1423; 49 U.S.C. 106(g) (Revised Pub. L. 97–449, January 12, 1983); and 14 CFR 11.89.

§ 39.13 [Amended]

2. Section 39.13 is amended by adding the following new airworthiness directive:

McDonnell Douglas: Applies to Model DC–9–81, –82, –83, –87 and MD–88 series airplanes, certificated in any category. Compliance required as indicated, unless previously accomplished.

To prevent the migration, off the through-bolt, of the left or right engine front mount upper or lower cone bolt through-bolt nut, accomplish the following:

A. Accomplish the inspections in accordance with paragraph B. of this AD as follows:

1. For engines that have accumulated 2,000 or more flight hours since installation, accomplish the inspections within 7 calendar days after the effective date of this amendment.

2. For engines that have accumulated less than 2,000 flight hours since installation, accomplish the inspections within 7 calendar days after the effective date of this amendment.

B. Inspect the through-bolt nut, P/N SPS83978–1216, for proper torque and conditions in accordance with McDonnell Douglas MD–80 Alert Service Bulletin A71–51, dated May 23, 1990. If any of the following discrepancies are found, take corrective action as required below:

Condition A: If the torque stripe is misaligned, prior to further flight, acomplish the following:

I. Remove and replace the nut in accordance with paragraph D. of this AD, and

II. Apply a new torque stripe.

Condition B: If the torque stripe is aligned properly, within 10 calendar days, verify the torque on the nut is 250 inch-pounds (in-lb) or more.

I. If the torque is 250 in-lb or more, remove and replace the torque stripe.

II. If the torque is less than 250 in-lb, reinstall the nut in accordance with paragraph D. of this AD and apply a new torque stripe.

Condition C: If the torque stripe is missing, and the nut is seated, and the through-bolt head is seated and positioned properly (there is no gap between the nut base and washer, or the washer and engine mount flange bushing, or the through-bolt head and retainer, or the retainer and engine mount flange bushing), within 10 calendar days, apply 30 in-lb of torque:

I. If the nut turns, remove and replace the nut in accordance with paragraph D. of this AD and apply a new torque stripe.

II. If the nut does not turn, torque to the required range of 250 in-lb, and apply a new torque stripe.

Condition D: If the torque stripe is missing and there is any gap between the nut base and washer, or the washer and engine mount flange bushing, or the thorugh-bolt head and retainer, or the retainer and engine mount flange bushing; prior to further flight apply 30 in-lb of torque:

I. If the nut turns, remove and replace the nut in accordance with paragraph D. of this AD and apply a new torque stripe.

II. If the nut does not turn, torque to the required range of 250 in-lb to 300 in-lb, and apply a new torque stripe.

Condition E: If the nut is missing and the through-bolt has not migrated, prior to further flight, install a new nut in accordance with paragraph D. of this AD and apply a new torque stripe.

Condition F: If the nut is missing and the through-bolt is missing or partially backed out, prior to further flight, repair in accordance with a method approved by the Manager, Los Angeles Aircraft Certification Office, FAA, Northwest Mountain Region.

C. Repeat inspections in accordance with paragraph B. of this AD at intervals not to exceed 30 calendar days; except that, if the torque stripe is aligned properly, the corrective action identified in Condition B, above, is not required.

D. Nut installation method and requirements:

1. Remove and replace the nut.

2. Remove the existing torque stripe.

3. Ensure that the through-bolt head is properly positioned and in place.

4. Measure the running torque of the nut on the through-bolt. If the running torque is less than 30 in-lb or more than 100 in-lb, discard the nut and replace it with a new nut. If the running torque is 30 in-lb or more but less than 100 in-lb, continue with the installation procedure.

5. Ensure that the final installation torque is at least 250 in-lb but less than 300 in-lb.

E. Within 10 days after performing the inspection required by paragraph B., above, submit a report of any discrepancies discovered, to the Manager, Los Angeles Manufacturing Inspection District Office, 3229 East Spring Street, Long Beach, California 90806–2425. The report must include the airplane's serial number.

F. An alternate means of compliance or adjustment to the compliance time, which provides an acceptable level of safety, may be used when approved by the Manager, Los Angeles Aircraft Certification Office, FAA, Northwest Mountain Region.

Note: The request should be forwarded through an FAA Principal Maintenance Inspector (PMI), who will either concur or comment and then send it to the Manager, Los Angeles Aircraft Certification Office.

G. Special flight permits may be issued in accordance with FAR 21.197 and 21.199 to operate airplanes to a base in order to comply with the requirements of this AD.

All persons affected by this directive who have not already received the appropriate service documents from the manufacturer, may obtain copies upon request to McDonnell Douglas Corporation, 3855 Lakewood Boulevard, Long Beach, California 90846, Attention: Business Unit Manager of Publications, C1–HCO (54–60). These documents may be examined at the FAA, Northwest Mountain Region, Transport Airplane Directorate, 17900 Pacific Highway South, Seattle, Washington, or the Los Angeles Aircraft Certification Office, 3229 East Spring Street, Long Beach, California.

This amendment supersedes Telegraphic AD T90–11–52, issued May 24, 1990.

This amendment becomes effective August 29, 1990 as to all persons, except those persons to whom it was made immediately effective by telegraphic AD T90–12–51, issued May 30, 1990, which contained this amendment.

Issued in Seattle, Washington, on July 25, 1990.

Darrell M. Pederson,

Acting Manager, Transport Airplane Directorate, Aircraft Certification Service.

[FR Doc. 90–18256 Filed 8–3–90; 8:45 am]

BILLING CODE 4910–13–M

DEPARTMENT OF COMMERCE

Bureau of Export Administration

15 CFR Parts 772 and 799

[Docket No. 900780–0180]

RIN 0694–A104

Individual Validated Licenses and Commodity Control List; Clarifications

AGENCY: Bureau of Export Administraton, Commerce.

ACTION: Final rule.

SUMMARY: This rule revises the Export Administration Regulations by making the following clarifications:

Section 772.4(b), providing for electronic submission of license applications is amended by clarifying that only authorized use of a Personal Identification Number (PIN) is permitted. The clarification is made following a six-month suspension of electronic submission privileges for an exporter, after an employee had permitted use of the PIN by another individual. Exporters are cautioned that misuse of PIN's is considered a serious infraction.

The procedure for submitting a Commodity Classification Request is amended to clarify that commodities must be clearly listed by model number in the request. As a general rule, no

more than five items will be considered in a single request.

EFFECTIVE DATE: This rule is effective August 6, 1990.

FOR FURTHER INFORMATION CONTACT: Patricia Muldonian, Office of Technology and Policy Analysis, Bureau of Export Administration, Telephone: (202) 377–2440.

SUPPLEMENTARY INFORMATION:

Rulemaking Requirements

1. This rule is consistent with Executive Orders 12291 and 12661.

2. This rule involves a collection of information subject to the Paperwork Reduction Act of 1980 (44 U.S.C. 3501 *et seq.*). This collection was approved by the Office of Management and Budget (OMB) under control number 0694–0048.

3. This rule does not contain policies with Federalism implications sufficient to warrant preparation of a Federalism assessment under Executive Order 12612.

4. Because a notice of proposed rulemaking and an opportunity for public comment are not required to be given for this rule by section 553 of the Administrative Procedure Act (5 U.S.C. 553), or by any other law, under sections 603(a) and 604(a) of the Regulatory Flexibility Act (5 U.S.C. 603(a) and 604(a)) no initial or final Regulatory Flexibility analysis has to be or will be prepared.

5. Section 13(a) of the Export Administration Act of 1979 (EAA), as amended (50 U.S.C. app. 2412(a)), exempts this rule from all requirements of section 553 of the Administrative Procedure Act (APA) (5 U.S.C. 553), including those requiring publication of a notice of proposed rulemaking, an opportunity for public comment, and a delay in effective date. This rule is also exempt from these APA requirements because it involves a foreign and military affairs function of the United States. Section 13(b) of the EAA does not require that this rule be published in proposed form because this rule does not impose a new control. Further, no other law requires that a notice of proposed rulemaking and an opportunity for public comment be given for this rule.

Accordingly, it is being issued in final form. However, as with other Department of Commerce rules, comments from the public are always welcome. Comments should be submitted to Patricia Muldonian, Office of Technology and Policy Analysis, Bureau of Export Administration, Department of Commerce, P.O. Box 273, Washington, DC 20044.

List of Subjects in 15 CFR Parts 772 and 799

Exports, Reporting and recordkeeping requirements.

Accordingly, parts 772 and 799 of the Export Administration Regulations (15 CFR parts 768–799) are amended as follows:

1. The authority citations for parts 772 and 799 continue to read as follows:

Authority: Public Law 96–72, Stat. 503 (50 U.S.C. app. 2401 *et seq.*), as amended by Public Law 97–145 of December 29, 1981, by Public Law 99–64 of July 12, 1985 and by Public Law 100–145 of August 23, 1988; Executive Order 12525 of July 12, 1985 (50 FR 28757, July 16, 1985); Public Law 95–223 of December 28, 1977 (50 U.S.C. 1701 *et seq.*); Executive Order 12532 of September 9, 1985 (50 FR 36861, September 10, 1985) as affected by notice of September 4, 1986 (51 FR 31925, September 8, 1986); Public Law 99–440 of October 2, 1986 (22 U.S.C. 5001 *et seq.*); and Executive Order 12571 of October 27, 1986 (51 FR 39505, October 29, 1986).

PART 772—[AMENDED]

2. A new paragraph (b)(2)(v) is added to § 772.4 to read as follows:

§ 772.4 How to apply for a validated license.

* * * * *

(b) * * *

(2) * * *

(v) No person shall use, copy, steal or otherwise compromise a PIN assigned to another person; and no person shall use, copy, steal or otherwise compromise the company identification number of a company that has not authorized such person to have access to that number.

* * * * *

3. Section 799.1 is amended by revising paragraph (f)(1)(iii) to read as follows:

§ 799.1 The Commodity Control List and how to use it.

* * * * *

(f) * * *

(1) * * *

(iii) The commodities to be classified must be clearly listed by model number in the request. No more than five commodities will be considered in a single request. Exceptions may be made on a case-by-case basis for several related products if the relationship between these products is satisfactorily substantiated and documented.

* * * * *

Dated: July 30, 1990.

James M. LeMunyon,

Deputy Assistant Secretary for Export Administration.

[FR Doc. 90–18145 Filed 8–3–90; 8:45 am]

BILLING CODE 3510-DT-M

DEPARTMENT OF HEALTH AND HUMAN SERVICES

Food and Drug Administration

21 CFR Part 74

[Docket No. 89C–0095]

Listing of Color Additives for Coloring Intraocular Lens Haptics; D&C Violet No. 2; Confirmation of Effective Date

AGENCY: Food and Drug Administration, HHS.

ACTION: Final rule, confirmation of effective date.

SUMMARY: The Food and Drug Administration (FDA) is confirming the effective date of June 7, 1990, for the final rule that amended the color additive regulations to provide for the safe use of D&C Violet No. 2 for coloring polymethylmethacrylate intraocular lens haptics.

DATES: Effective date confirmed: June 7, 1990.

FOR FURTHER INFORMATION CONTACT: Sandra L. Varner, Center for Food Safety and Applied Nutrition (HFF–335), Food and Drug Administration, 200 C St. SW., Washington, DC 20204, 202–472–5690.

SUPPLEMENTARY INFORMATION: In the **Federal Register** of May 7, 1990 (55 FR 18865), FDA issued a final rule amending 21 CFR 74.3602 of the color additive regulations to provide for the safe use of D&C Violet No. 2 for coloring polymethylmethacrylate intraocular lens haptics.

FDA gave interested persons until June 6, 1990, to file objections or requests for a hearing. The agency received no objections or requests for a hearing on the final rule. Therefore, FDA concludes that the final rule published in the **Federal Register** of May 7, 1990, should be confirmed.

List of Subjects in 21 CFR Part 74

Color additives, Cosmetics, Drugs.

Therefore, under the Federal Food, Drug, and Cosmetic Act (secs. 201, 401, 402, 403, 409, 501, 502, 505, 601, 602, 701, 706, (21 U.S.C. 321, 341, 342, 343, 348, 351, 352, 355, 361, 362, 371, 376)) and under authority delegated to the Commissioner of Food and Drugs (21 CFR 5.10), notice is given that no objections or requests for a hearing were filed in response to the May 7, 1990, final rule. Accordingly, the amendments promulgated thereby became effective June 7, 1990.

Dated: July 31, 1990.

Ronald G. Chesemore,

Associate Commissioner for Regulatory Affairs.

[FR Doc. 90-18249 Filed 8-3-90; 8:45 am]

BILLING CODE 4160-01-M

21 CFR Part 74

[Docket No. 89C-0304]

Listing of Color Additives for Coloring Sutures; [Phthalocyaninato(2-)] Copper; Confirmation of Effective Date

AGENCY: Food and Drug Administration, HHS.

ACTION: Final rule; confirmation of effective date.

SUMMARY: The Food and Drug Administration (FDA) is confirming the effective date of June 12, 1990, for the final rule that amended the color additive regulations to provide for the safe use of [phthalocyaninato(2-)] copper to color nonabsorbable monofilament sutures composed of polybutylene terephthalate for general and ophthalmic surgery.

DATES: Effective date confirmed: June 12, 1990.

FOR FURTHER INFORMATION CONTACT: Sandra L. Varner, Center for Food Safety and Applied Nutrition (HFF-335), Food and Drug Administration, 200 C St. SW., Washington, DC 20204, 202-472-5690.

SUPPLEMENTARY INFORMATION: In the **Federal Register** of May 10, 1990 (55 FR 19618), FDA amended 21 CFR part 74 of the color additive regulations in 21 CFR 74.3045 by revising paragraph (c)(1) to provide for the safe use of [phthalocyaninato (2-)] copper to color nonabsorbable monofilament sutures composed of polybutylene terephthalate for general and ophthalmic surgery.

FDA gave interested persons until June 11, 1990, to file objections or requests for a hearing. The agency received no objections or requests for a hearing on the final rule. Therefore, FDA finds that the final rule published in the **Federal Register** of May 10, 1990, should be confirmed.

List of Subjects in 21 CFR Part 74

Color additives, Cosmetics, Drugs.

Therefore, under the Federal Food, Drug, and Cosmetic Act (sections 201, 401, 402, 403, 409, 501, 502, 505, 601, 602, 701, 706 (21 U.S.C. 321, 341, 342, 343, 348, 351, 352, 355, 361, 362, 371, 376)) and under authority delegated to the Commissioner of Food and Drugs (21 CFR 5.10), notice is given that no objections or requests for a hearing were filed in response to the May 10, 1990, final rule. Accordingly, the amendments promulgated thereby became effective June 12, 1990.

Dated: July 31, 1990

Ronald G. Chesemore,

Associate Commissioner for Regulatory Affairs.

[FR Doc. 90-18250 Filed 8-3-90; 8:45 am]

BILLING CODE 4160-01-M

21 CFR Part 176

[Docket No. 86F-0274]

Indirect Food Additives; Paper and Paperboard Components

AGENCY: Food and Drug Administration, HHS.

ACTION: Final rule.

SUMMARY: The Food and Drug Administration (FDA) is amending the food additive regulations to provide for the safe use of glutaraldehyde as a slimicide in the manufacture of paper and paperboard that may contact food. This action is in response to a petition filed by Union Carbide Corp.

DATES: Effective August 6, 1990. Written objections and requests for a hearing by September 5, 1990.

ADDRESSES: Written objections to the Dockets Management Branch (HFA-305), Food and Drug Administration, Rm. 4-62, 5600 Fishers Lane, Rockville, MD 20857.

FOR FURTHER INFORMATION CONTACT: Edward J. Machuga, Center for Food Safety and Applied Nutrition (HFF-335), Food and Drug Administration, 200 C St. SW., Washington, DC 20204, 202-472-5690.

SUPPLEMENTARY INFORMATION: In a notice published in the **Federal Register** of July 22, 1986 (51 FR 26309), FDA announced that a food additive petition had been filed by Union Carbide Corp., Bound Brook, NJ 08805, proposing that § 176.300 *Slimicides* (21 CFR 176.300) be amended to provide for the safe use of glutaraldehyde as a slimicide in the manufacture of paper and paperboard that contact food.

FDA has evaluated data in the petition and other relevant material. The agency concludes that the proposed food additive use is safe, and that 21 CFR 176.300(c) should be amended as set forth below.

In accordance with § 171.1(h) (21 CFR 171.1(h)), the petition and the documents that FDA considered and relied upon in reaching its decision to approve the petition are available for inspection at the Center for Food Safety and Applied Nutrition by appointment with the information contact person listed above. As provided in 21 CFR 171.1(h), the agency will delete from the documents any materials that are not available for public disclosure before making the documents available for inspection.

The agency has carefully considered the potential environmental effects of this action. FDA has concluded that the action will not have a significant impact on the human environment, and that an environmental impact statement is not required. The agency's finding of no significant impact and the evidence supporting that finding, contained in an environmental assessment, may be seen in the Dockets Management Branch (address above) between 9 a.m. and 4 p.m., Monday through Friday.

Any person who will be adversely affected by this regulation may at any time on or before September 5, 1990, file with the Dockets Management Branch (address above) written objections thereto. Each objection shall be separately numbered, and each numbered objection shall specify with particularity the provisions of the regulation to which objection is made and the grounds for the objection. Each numbered objection on which a hearing is requested shall specifically so state. Failure to request a hearing for any particular objection shall constitute a waiver of the right to a hearing on that objection. Each numbered objection for which a hearing is requested shall include a detailed description and analysis of the specific factual information intended to be presented in support of the objection in the event that a hearing is held. Failure to include such a description and analysis for any particular objection shall constitute a waiver of the right to a hearing on the objection. Three copies of all documents shall be submitted and shall be identified with the docket number found in brackets in the heading of this document. Any objections received in response to the regulation may be seen in the Dockets Management Branch between 9 a.m. and 4 p.m., Monday through Friday.

List of Subjects in 21 CFR Part 176

Food additives, Food packaging, Paper and paperboard.

Therefore, under the Federal Food, Drug, and Cosmetic Act and under authority delegated to the Commissioner of Food and Drugs and redelegated to the Director, Center for Food Safety and Applied Nutrition, 21 CFR part 176 is amended as follows:

PART 176—INDIRECT FOOD ADDITIVES: PAPER AND PAPERBOARD COMPONENTS

1. The authority citation for 21 CFR part 176 continues to read as follows:

Authority: Secs. 201, 402, 406, 409, 706 of the Federal Food, Drug, and Cosmetic Act (21 U.S.C. 321, 342, 346, 348, 376).

2. Section 176.300 is amended by alphabetically adding a new entry to the table in paragraph (c) to read as follows:

§ 176.300 Slimicides.

* * * * *

(c) * * *

List of substances	Limitations
* * * * *	
Glutaraldehyde (CAS Reg. No. 111-30-8).	
* * * * *	

* * * * *

Dated: July 26, 1990.

Douglas L. Archer,

Acting Deputy Director, Center for Food Safety and Applied Nutrition.

[FR Doc. 90-18193 Filed 8-3-90; 8:45 am]

BILLING CODE 4160-01-M

21 CFR Part 177

[Docket No. 89F-0335]

Indirect Food Additives: Polymers

AGENCY: Food and Drug Administration, HHS.

ACTION: Final rule.

SUMMARY: The Food and Drug Administration (FDA) is amending the food additive regulations to provide for alternative specifications applicable to 4-methylpentene-1 copolymers for use as articles or components of articles intended for use in contact with food. This action is in response to a petition filed by Mitsui Petrochemical Industries, Ltd.

DATES: Effective August 6, 1990; written objections and requests for a hearing by September 5, 1990. The Director of the Office of the Federal Register approves the incorporation by reference in accordance with 5 U.S.C. 552(a) of certain publications in 21 CFR 177.1520 (d)(8) and (d)(9), effective August 6, 1990.

ADDRESSES: Written objections may be sent to the Dockets Management Branch (HFA-305), Food and Drug Administration, Rm. 4-62, 5600 Fishers Lane, Rockville, MD 20857.

FOR FURTHER INFORMATION CONTACT: Thomas C. Brown, Center for Food Safety and Applied Nutrition (HFF-335), Food and Drug Administration, 200 C Street SW., Washington, DC 20204, 202-472-5690.

SUPPLEMENTARY INFORMATION: In a notice published in the **Federal Register** of August 30, 1989 (54 FR 35939), FDA announced that a food additive petition (FAP 9B4160) had been filed by Mitsui Petrochemical Industries, Ltd., Kasumigaseki Bldg., P.O. Box 90, 2-5 Kasumigaseki 3-chome, Chiyoda-KU, Tokyo 100, Japan, proposing that § 177.1520 *Olefin polymers* (21 CFR 177.1520) be amended to provide for alternate specifications applicable to 4-methylpentene-1 copolymers for use as articles or components of articles intended for use in contact with food. Alternate specifications in the table in § 177.1520(c), entry 3.3, would include:

(1) Lowering the minimum acceptable melting point from 235 to 220 °C as determined by the American Society for Testing Materials (ASTM) method D3418-82;

(2) Deleting the specification for maximum extractable fraction in *n*-hexane and maximum soluble fraction in xylene; and

(3) Establishing a specification for minimum intrinsic viscosity of 1.0, as determined by ASTM method D1601-78.

FDA has evaluated data in the petition and other relevant material. The agency concludes that the proposed specifications for 4-methylpentene-1 copolymers are appropriate as alternative specifications to those currently in the regulation. Therefore, the agency is amending § 177.1520 in the table in paragraph (c) by revising entry 3.3 and adding paragraphs (d)(8) and (d)(9) as set forth below.

In accordance with § 171.1(h) (21 CFR 171.1(h)), the petition and the documents that FDA considered and relied upon in reaching its decision to approve the petition are available for inspection at the Center for Food Safety and Applied Nutrition by appointment with the information contact person listed above. As provided in 21 CFR 171.1(h), the agency will delete from the documents any materials that are not available for public disclosure before making the documents available for inspection.

The agency has determined under 21 CFR 25.24(a)(9) that this action is of a type that does not individually or cumulatively have a significant effect on the human environment. Therefore, neither an environmental assessment nor an environmental impact statement is required.

Any person who will be adversely affected by this regulation may at any time on or before September 5, 1990 file with the Dockets Management Branch (address above) written objections thereto. Each objection shall be separately numbered, and each numbered objection shall specify with particularity the provisions of the regulation to which objection is made and the grounds for the objection. Each numbered objection on which a hearing is requested shall specifically so state. Failure to request a hearing for any particular objection shall constitute a waiver of the right to a hearing on that objection. Each numbered objection for which a hearing is requested shall include a detailed description and analysis of the specific factual information intended to be presented in support of the objection in the event that a hearing is held. Failure to include such a description and analysis for any particular objection shall constitute a waiver of the right to a hearing on the objection. Three copies of all documents shall be submitted and shall be identified with the docket number found in brackets in the heading of this document. Any objections received in response to the regulation may be seen in the Dockets Management Branch between 9 a.m. and 4 p.m., Monday through Friday.

List of Subjects in 21 CFR Part 177

Food additives, Food packaging, Incorporation by reference.

Therefore, under the Federal Food, Drug, and Cosmetic Act and under authority delegated to the Commissioner of Food and Drugs and redelegated to the Director, Center for Food Safety and Applied Nutrition, 21 CFR part 177 is amended as follows:

PART 177—INDIRECT FOOD ADDITIVES: POLYMERS

1. The authority citation for 21 CFR Part 177 continues to read as follows:

Authority: Secs. 201, 402, 409, 706 of the Federal Food, Drug, and Cosmetic Act (21 U.S.C. 321, 342, 348, 376).

2. Section 177.1520 is amended in the table in paragraph (c) by revising entry 3.3 and by adding new paragraphs (d)(8) and (d)(9) to read as follows:

§ 177.1520 Olefin polymers.

* * * * *

(c) * * *

Olefin polymers	Density	Melting point (MP) or softening point (SP) (*Degrees Centigrade*)	Maximum extractable fraction (expressed as percent by weight of polymer) in *N*-hexane at specified temperatures	Maximum soluble fraction (expressed as percent by weight of polymer) in xylene at specified temperatures
* * * *	*	*	*	
3.3a Olefin polymers described in paragraph (a)(3)(ii) of this section	0.82–0.85	MP: 235–250 °C	6.6 pct at reflux	7.5 pct at 25 °C.
3.3b Olefin copolymers described in paragraph (a)(3)(ii) of this section, provided that such olefin polymers have a melt temperature of 220 °C to 250 °C (428 °F to 482 °F) as determined by the method described in paragraph (d)(8) of this section and minimum intrinsic viscosity of 1.0 as determined in paragraph (d)(9) of this section.	0.82–0.85			
* * * *	*	*	*	

(d) * * *

(8) *Melting peak temperature.* The melt temperature of the olefin polymers described in paragraph (a)(3)(ii) of this section shall be determined by ASTM method D 3418–82, "Standard Test Method for Transition Temperatures of Polymers by Thermal Analysis," which is incorporated by reference in accordance with 5 U.S.C. 552(a). The availability of this incorporation by reference is given in paragraph (d)(1) of this section.

(9) *Intrinsic viscosity.* The intrinsic viscosity of the olefin polymers described in paragraph (a)(3)(ii) of this section shall be determined by ASTM method D 1601–78, "Standard Test Method for Dilute Solution Viscosity of Ethylene Polymers," which is incorporated by reference in accordance with 5 U.S.C. 552(a). The availability of this incorporation by reference is given in paragraph (d)(1) of this section.

* * * * *

Dated: July 26, 1990.

Douglas L. Archer,

Acting Deputy Director, Center for Food Safety and Applied Nutrition.

[FR Doc. 90–18191 Filed 8–3–90; 8:45 am]

BILLING CODE 4160–01–M

---

21 CFR Part 178

[Docket No. 87F–0319]

Indirect Food Additives; Adjuvants, Production Aids, and Sanitizers

AGENCY: Food and Drug Administration, HHS.

ACTION: Final rule.

SUMMARY: The Food and Drug Administration (FDA) is amending the food additive regulations to provide for the safe use of 3,3′-[(2,5-dimethyl-1, 4-phenylene)bis[iminocarbonyl(2-hydroxy-3, 1-naphthalenediyl)azo]] bis(4-methylbenzoic acid), bis(2-chloroethyl) ester as a colorant for food-contact polymers. This action responds to a petition filed by Ciba-Geigy Corp.

DATES: Effective August 6, 1990; written objections and requests for a hearing by September 5, 1990.

ADDRESSES: Written objections to the Dockets Management Branch (HFA–305), Food and Drug Administration, rm. 4–62, 5600 Fishers Lane, Rockville, MD 20857.

FOR FURTHER INFORMATION CONTACT: Hortense S. Macon, Center for Food Safety and Applied Nutrition (HFF–335), Food and Drug Administration, 200 C St. SW., Washington, DC 20204, 202–472–5690.

SUPPLEMENTARY INFORMATION: In a notice published in the **Federal Register** of November 9, 1987 (52 FR 43122), FDA announced that a food additive petition (FAP 7B4026) had been filed by Ciba-Geigy Corp., Seven Skyline Dr., Hawthorne, NY 10532–2188, proposing that § 178.3297 *Colorants for polymers* (21 CFR 178.3297) be amended to provide for the safe use of 3,3′-[(2,5-dimethyl-1, 4-phenylene)bis[iminocarbonyl(2-hydroxy-3, 1-naphthalenediyl)azo]] bis(4-methylbenzoic acid), bis(2-chloroethyl) ester as a colorant for food-contact polymers.

FDA has evaluated data in the petition and other relevant material. The agency concludes that these data and material establish the safety of the level of use of the additive in the manufacture of polymers, and that the regulations should be amended in the table in § 178.3297(e) as set forth below.

In accordance with § 171.1(h) (21 CFR 171.1(h)), the petition and the documents that FDA considered and relied upon in reaching its decision to approve the petition are available for inspection at the Center for Food Safety and Applied Nutrition by appointment with the information contact person listed above. As provided in 21 CFR 171.1(h), the agency will delete from the documents any materials that are not available for public disclosure before making the documents available for inspection.

The agency has carefully considered the potential environmental effects of this action. FDA has concluded that the action will not have a significant impact on the human environment, and that an environmental impact statement is not required. The agency's finding of no significant impact and the evidence supporting that finding, contained in an environmental assessment, may be seen in the Dockets Management Branch (address above) between 9 a.m. and 4 p.m., Monday through Friday.

Any person who will be adversely affected by this regulation may at any time on or before September 5, 1990, file with the Dockets Management Branch (address above) written objections thereto. Each objection shall be separately numbered, and each numbered objection shall specify with particularity the provisions of the regulation to which objection is made and the grounds for the objection. Each numbered objection on which a hearing is requested shall specifically so state. Failure to request a hearing for any particular objection shall constitute a waiver of the right to a hearing on that objection. Each numbered objection for which a hearing is requested shall include a detailed description and anylysis of the specific factual information intended to be presented in support of the objection in the event that a hearing is held. Failure to include such a description and analysis for any particular objection shall constitute a waiver of the right to a hearing on the objection. Three copies of all documents shall be submitted and shall be identified with the docket number found in brackets in the heading of this document. Any objections received in response to the regulation may be seen

in the Dockets Management Branch between 9 a.m. and 4 p.m., Monday through Friday.

List of Subjects in 21 CFR Part 178

Food additives, Food packaging.

Therefore, under the Federal Food, Drug, and Cosmetic Act and under authority delegated to the Commissioner of Food and Drugs and redelegated to the Director of the Center for Food Safety and Applied Nutrition, 21 CFR part 178 is amended as follows:

PART 178—INDIRECT FOOD ADDITIVES: ADJUVANTS, PRODUCTION AIDS, AND SANITIZERS

1. The authority citation for 21 CFR part 178 continues to read as follows:

Authority: Secs. 201, 402, 409, 706 of the Federal Food, Drug, and Cosmetic Act (21 U.S.C. 321, 342, 348, 376).

2. Section 178.3297 is amended in the table is paragraph (e) by alphabetically adding a new entry under the headings "Substances" and "Limitations" to read as follows:

§ 178.3297 Colorants for polymers.

* * * * *

(e) * * *

Substances	Limitations
* * *	* * *
3,3'-[(2,5-Dimethyl-1,4-phenylene)bis[imino-carbonyl(2-hydroxy-3,1-naphthalenediyl) azo]] bis(4-methylbenzoic acid), bis(2-chloroethyl) ester (CAS Reg. No. 68259-05-2).	For use at levels not to exceed 1 percent by weight of polymers. The finished articles are to contact food only under conditions of use B through H described in Table 2 of § 176.170(c) of this chapter.
* * *	* * *

Dated: July 26, 1990.

Douglas L. Archer,

Acting Deputy Director, Center for Food Safety and Applied Nutrition

[FR Doc. 90-18192 Filed 8-3-90; 8:45 am]

BILLING CODE 4160-01-M

21 CFR Part 558

New Animal Drugs for Use in Animal Feeds; Certain Drug Combinations Involving Melengestrol Acetate, Monensin, Lasalocid, and Tylosin

AGENCY: Food and Drug Administration HHS.

ACTION: Final rule.

SUMMARY: The Food and Drug Administration (FDA) is amending the animal drug regulations to reflect approval of six new animal drug applications (NADA's) filed by The Upjohn Co. The applications provide for use of separately approved Type A medicated articles containing melengestrol acetate, monensin, lasalocid, and tylosin to manufacture Type C medicated feeds containing certain combinations of these drugs. The feeds are for use in heifers confined for slaughter for increased rate of weight gain, improved feed efficiency, suppression of estrus, and reduced incidence of liver abscesses. The regulations are further amended editorially to improve clarity and eliminate redundancies.

EFFECTIVE DATE: August 6, 1990.

FOR FURTHER INFORMATION CONTACT: Robert J. Condon, Center for Veterinary Medicine (HFV-126), Food and Drug Administration, 5600 Fishers Lane, Rockville, MD 20857, 301-443-5247.

SUPPLEMENTARY INFORMATION: The Upjohn Co., Kalamazoo, MI 49001, filed six NADA's providing for combining separately-approved melengestrol acetate (MGA), monensin sodium, lasalocid sodium, and tylosin phosphate Type A medicated articles to manufacture the following Type C medicated feeds:

(1) MGA from a dry (NADA 138-995) or liquid (NADA 138-192) Type A medicated article plus tylosin phosphate.

(2) MGA from a dry (NADA 138-792) or liquid (NADA 138-870) Type A medicated article, monensin sodium, and tylosin phosphate.

(3) MGA from a dry (NADA 138-904) or liquid (NADA 138-992) Type A medicated article, lasalocid sodium, and tylosin phosphate.

The feeds are intended for heifers confined for slaughter for increased rate of weight gain, improved feed efficiency, suppression of estrus (heat), and reduced incidence of liver abscesses. The NADA's are approved and § 558.342 (21 CFR 558.342) is amended by adding new paragraphs (c)(4), (c)(5), and (c)(6) to reflect the approvals. The basis for the approval is discussed in the freedom of information summary.

Certain regulations are also amended for editorial reasons. Portions of the regulations in § 558.342 are amended to correct inconsistencies and to make them more easily understood while regulations in §§ 558.311 and 558.355 are removed because they are redundant. The regulation for MGA plus lasalocid sodium in § 558.311(e)(1)(xii), that is a repetition of a regulation in § 558.342(c)(3), is removed and replaced with a reference to the latter regulation in § 558.311(e)(3)(i). Similarly, the regulation for melengestrol acetate plus monensin in § 558.355(f)(3)(iv), that is a repetition of a regulation in § 558.342(c)(2), is removed and replaced with a reference to the latter regulation.

These are new animal drugs used in Type A medicated articles to make Type C medicated feeds. MGA is a Category II drug which, as provided in § 558.4, requires an approved form FDA 1900 for making a Type C medicated feed from a Type A medicated article. Therefore, an approved form FDA 1900 is required for making a Type C medicated feed containing melengestrol acetate in various combinations involving monensin, lasalocid, and tylosin as in the approved subject NADA's and in the regulations herein added to § 558.342.

In accordance with the freedom of information provisions of part 20 (21 CFR part 20) and § 514.11(e)(2)(ii) (21 CFR 514.11(e)(2)(ii)), a summary of safety and effectiveness data and information submitted to support approval of these applications may be seen in the Dockets Management Branch (HFA-305), Food and Drug Administration, Rm. 4-62, 5600 Fishers Lane, Rockville, MD 20857, from 9 a.m. to 4 p.m., Monday through Friday.

These approvals qualify for 3 years of marketing exclusivity beginning August 6, 1990, because the criteria for such exclusivity under the Generic Animal Drug and Patent Term Restoration Act of 1988, section 512(c)(2)(F)(ii) of the Federal Food, Drug, and Cosmetic Act (21 U.S.C. 360b(c)(2)(F)(ii)) have been met.

The Agency has determined under § 25.24(d)(1)(ii) (21 CFR 25.24(d)(1)(ii)) that these actions are of a type that do not individually or cumulatively have a significant effect on the human environment. Therefore, neither environmental assessments nor environmental impact statements are required.

List of Subjects in 21 CFR Part 558

Animal drugs, Animal feeds.

Therefore, under the Federal Food, Drug, and Cosmetic Act and under authority delegated to the Commissioner of Food and Drugs and redelegated to the Center for Veterinary Medicine, 21 CFR part 558 is amended as follows:

PART 558—NEW ANIMAL DRUGS FOR USE IN ANIMAL FEEDS

1. The authority citation for 21 CFR part 558 continues to read as follows:

Authority: Secs. 512, 701 of the Federal Food, Drug, and Cosmetic Act (21 U.S.C. 360b, 371).

2. Section 558.311 is amended in the table in paragraph (e)(1) by removing entry (xii), by redesignating entry (xiii) as entry (xii), and by adding new paragraph (e)(3) to read as follows:

§ 558.311 Lasalocid.

* * * * *

(e) * * *

(3) *Additional combinations.* Lasalocid may be used in accordance with the provisions of this section in combination as follows:

(i) Melengestrol acetate alone or in combination with tylosin in accordance with § 558.342.

(ii) [Reserved]

3. Section 558.342 is amended by revising paragraphs (a), (c)(1)(ii), the introductory text of paragraph (c)(2), (c)(2)(ii), the introductory text of paragraph (c)(3), and (c)(3)(ii), and by adding new paragraphs (c)(4), (c)(5), and (c)(6) to read as follows:

§ 558.342 Melengestrol acetate.

(a) *Approvals.* Dry Type A medicated articles containing 100 or 200 milligrams per pound or liquid Type A article containing 500 milligrams per pound to 000009 in § 510.600(c) of this chapter.

* * * * *

(c) * * *

(1) * * *

(ii) *Limitations:* Heifers being fed for slaughter; administer 0.5 to 2.0 pounds per head per day of medicated feed containing 0.125 to 1.0 milligram of melengestrol acetate per pound to provide 0.25 to 0.50 milligram of melengestrol acetate per head per day. Withdraw melengestrol acetate 48 hours prior to slaughter. Melengestrol acetate as provided by No. 000009 in § 510.600(c) of this chapter.

(2) *Amount:* Melengestrol acetate, 0.25 to 0.40 milligram per head per day, plus monensin (as monensin sodium), 50 to 360 milligrams per head per day.

* * * * *

(ii) *Limitations:* Heifers being fed in confinement for slaughter. Add at the rate of 0.5 to 2.0 pounds per head per day a medicated feed (liquid or dry) containing 0.125 to 0.80 milligram of melengestrol acetate per pound to a feed containing 5 to 30 grams of monensin per ton; or, add at the rate of 0.5 to 2.0 pounds per head per day a medicated feed (liquid or dry) containing 0.125 to 0.80 milligram of melengestrol acetate plus 25 to 720 milligrams of monensin per pound to a nonmedicated feed to provide 0.25 to 0.40 milligram of melengestrol acetate and 50 to 360 milligrams of monensin per head per day. The liquid medicated feeds must be manufactured in accordance with § 558.355(f)(3)(i). Withdraw melengestrol acetate 48 hours prior to slaughter. Melengestrol acetate and monensin as provided by Nos. 000009 and 000986, respectively, in § 510.600(c) of this chapter.

(3) *Amount.* Melengestrol acetate, 0.25 to 0.50 milligram per head per day in combination with lasalocid (as lasalocid sodium), 100 to 360 milligrams per head per day.

* * * * *

(ii) *Limitations.* Heifers being fed in confinement for slaughter. Add at the rate of 0.5 to 2.0 pounds per head per day a medicated feed (liquid or dry) containing 0.125 to 1.0 milligram of melengestrol acetate per pound to a feed containing 10 to 30 grams of lasalocid per ton; or, add at the rate of 0.5 to 2.0 pounds per head per day a medicated feed (liquid or dry) containing 0.125 to 1.0 milligram of melengestrol acetate plus 50 to 720 milligrams of lasalocid per pound to a ration of nonmedicated feed to provide 0.25 to 0.5 milligram of melengestrol acetate and 100 to 360 milligrams of lasalocid per head per day. Withdraw melengestrol acetate 48 hours prior to slaughter. Melengestrol acetate and lasalocid as provided by Nos. 000009 and 000004, respectively, in § 510.600(c) of this chapter.

(4) *Amount.* Melengestrol acetate, 0.25 to 0.50 milligram per head per day, plus tylosin (as tylosin phosphate), 90 milligrams per head per day.

(i) *Indications for use.* For increased rate of weight gain, improved feed efficiency, suppression of estrus (heat), and reduced incidence of liver abscesses.

(ii) *Limitations.* Heifers being fed in confinement for slaughter. Add at the rate of 0.5 to 2.0 pounds per day a liquid or dry medicated feed containing 0.125 to 1.0 milligram of melengestrol acetate per pound to a medicated feed containing tylosin at a concentration of 8 to 10 grams per ton; or, add at the rate of 0.5 to 2.0 pounds per head per day a medicated feed containing 0.125 to 1.0 milligram of melengestrol acetate per pound to 4.5 to 18 pounds of a dry medicated feed containing 10 to 40 grams of tylosin per ton. This 5 to 20 pounds of medicated feed will supply 0.25 to 0.50 milligram of melengestrol acetate plus 90 milligrams of tylosin per head per day. Withdraw melengestrol acetate 48 hours prior to slaughter. Melengestrol acetate and tylosin as provided by Nos. 000009 and 000986, respectively, in § 510.600(c) of this chapter.

(5) *Amount.* Melengestrol acetate, 0.25 to 0.50 milligram per head per day, plus monensin (as monensin sodium) at 50 to 360 milligrams per head per day, plus tylosin (as tylosin phosphate), 90 milligrams per head per day.

(i) *Indications for use.* For increased rate of weight gain, improved feed efficiency, suppression of estrus (heat), and reduced incidence of liver abscesses.

(ii) *Limitations.* Heifers being fed in confinement for slaughter. Add at the rate of 0.5 to 2.0 pounds per head per day of a liquid or dry medicated feed containing 0.125 to 1.0 milligram of melengestrol acetate per pound to a medicated feed containing 5 to 30 grams of monensin and 8 to 10 grams of tylosin per ton; or, add at the rate of 0.5 to 2.0 pounds per head per day a medicated feed (liquid or dry) containing 0.125 to 1.0 milligram of melengestrol acetate plus 25 to 720 milligrams of monensin per pound to 4.5 to 18 pounds of a dry medicated feed containing 10 to 40 grams of tylosin per ton. This 5 to 20 pounds of medicated feed will supply 0.25 to 0.5 milligram of melengestrol acetate, 50 to 360 milligrams of monensin, and 90 milligrams of tylosin per head per day. The liquid medicated feeds must be manufactured in accordance with § 558.355(f)(3)(i). Withdraw melengestrol acetate 48 hours prior to slaughter. Melengestrol acetate, monensin, and tylosin as provided by Nos. 000009 and 000986, respectively, in § 510.600(c) of this chapter.

(6) *Amount.* Melengestrol acetate, 0.25 to 0.50 milligram per head per day, plus lasalocid (as lasalocid sodium), 100 to 360 milligrams per head per day, and tylosin (as tylosin phosphate), 90 milligrams per head per day.

(i) *Indications for use.* For increased rate of weight gain, improved feed efficiency, suppression of estrus (heat), and reduced incidence of liver abscesses.

(ii) *Limitations:* Heifers being fed in confinement for slaughter. Add at the rate of 0.5 to 2.0 pounds per head per day a liquid or dry medicated feed containing 0.125 to 1.0 milligram of melengestrol acetate per pound to a medicated feed containing 10 to 30 grams of lasalocid and 8 to 10 grams of tylosin per ton; or, add at the rate of 0.5 to 2.0 pounds per head per day a medicated feed (liquid or dry) containing 0.125 to 1.0 milligram of melengestrol acetate plus 50 to 720 milligrams of lasalocid per pound to 4.5 to 18 pounds of a dry medicated feed containing 10 to 40 grams of tylosin per ton. This 5 to 20 pounds of medicated feed will supply 0.25 to 0.5 milligram of melengestrol acetate, 100 to 360 milligrams of lasalocid, and 90 milligrams of tylosin per head per day. Withdraw melengestrol acetate 48 hours

prior to slaughter. Melengestrol acetate, lasalocid, and tylosin as provided by Nos. 000009, 000004, and 000986, respectively, in § 510.600(c) of this chapter.

4. Section 558.355 is amended by revising paragraph (f)(3)(iv) to read as follows:

§ 558.355 Monensin.

* * * * *

(f) * * *

(3) * * *

(iv) *Amount per ton.* Monensin, 5 to 30 grams per ton (to provide 50 to 360 milligrams per head per day), plus melengestrol acetate, 0.25 to 1.6 grams per ton (to provide 0.25 to 0.40 milligram per head per day). See § 558.342(c)(2).

* * * * *

5. Section 558.625 is amended by adding paragraph (f)(2)(ii) to read as follows:

§ 558.625 Tylosin.

* * * * *

(f) * * *

(2) * * *

(ii) Melengestrol acetate alone or in combination with certain ionophores in accordance with § 558.342.

* * * * *

Dated: July 27, 1990.

Gerald B. Guest,

Director, Center for Veterinary Medicine.

[FR Doc. 90-18190 Filed 8-3-90; 8:45 am]

BILLING CODE 4160-01-M

DEPARTMENT OF THE INTERIOR

Office of Surface Mining Reclamation and Enforcement

30 CFR Part 917

Kentucky Regulatory Program

AGENCY: Office of Surface Mining Reclamation and Enforcement (OSM), Interior.

ACTION: Notice of final action to preempt provisions of State law; correction.

SUMMARY: This document corrects a notice of final action to preempt certain provisions of State law published on June 5, 1990 (55 FR 22903-22904), concerning an amendment to the Kentucky regulatory program under the Surface Mining Control and Reclamation Act of 1977 (SMCRA).

FOR FURTHER INFORMATION CONTACT: William J. Kovacic, Director, Lexington Field Office, Office of Surface Mining Reclamation and Enforcement, 340 Legion Drive, Suite 28, Lexington, Kentucky 40504; Telephone (606) 233-7327.

SUPPLEMENTARY INFORMATION: The following correction is made in a notice of final action to preempt certain provisions of the Kentucky Surface Mining Law (KRS Chapter 350) as that notice was published in the **Federal Register** on June 5, 1990 (55 FR 22903-22904).

1. On page 22903, third column, second paragraph, first sentence, change "KRS 305.093(9)" to "KRS 350.093(9)".

List of Subjects in 30 CFR Part 917

Coal mining, Intergovernmental relations, Surface mining, Underground mining.

Dated: July 20, 1990.

Carl C. Close,

Assistant Director, Eastern Field Operations.

[FR Doc. 90-18261 Filed 8-3-90; 8:45 am]

BILLING CODE 4310-05-M

DEPARTMENT OF DEFENSE

Office of the Secretary

32 CFR Part 287

[Defense Communications Agency Instruction 210-225-1]

Defense Communications Agency (DCA) Freedom of Information Act Program

AGENCY: Defense Communications Agency.

ACTION: Final rule.

SUMMARY: This document revises 32 CFR part 287. It implements the provisions of DoD 5400.7-R, "DoD Freedom of Information Act Program" (32 CFR part 286) for the Defense Communications Agency.

EFFECTIVE DATE: February 7, 1990.

FOR FURTHER INFORMATION CONTACT: Ms. Beverly Sampson, Defense Communications Agency, Washington, DC 20305-2000, telephone (202) 692-9270.

SUPPLEMENTARY INFORMATION:

List of Subjects in 32 CFR Part 287

Freedom of information.

Accordingly, title 32, subchapter P is amended to revise part 287 to read as follows:

PART 287—DEFENSE COMMUNICATIONS AGENCY (DCA) FREEDOM OF INFORMATION ACT PROGRAM

287.1 Purpose.
287.2 Applicability.
287.3 Authority.
287.4 Responsibilities.
287.5 Fees.
287.6 Reports.
287.7 Questions.
287.8 "For Official Use Only" Records.

Authority: 5 U.S.C. 552a.

§ 287.1 Purpose.

This part delineates responsibility for making available to the public the maximum amount of information concerning the operations and activities of the Defense Communications Agency (DCA). It is to be used in conjunction with 32 CFR part 286 "DoD Freedom of Information Act Program."

§ 287.2 Applicability.

This part applies to Headquarters, DCA, and DCA field activities.

§ 287.3 Authority.

This part is published in accordance with the authority contained in 32 CFR part 285 as promulgated by 32 CFR part 286.

§ 287.4 Responsibilities.

(a) The Office of the Chief of Staff, Corporate Exchange Branch, (CEB) at DCA Headquarters, Eight Street and South Courthouse Rd, Arlington, VA, will:

(1) Make the material described in Chapter II, section 2-101, paragraph (a)(2) of the Freedom of Information Act available for public inspection and reproduction. A current index of this material will be maintained in accordance with chapter II, section 2-101, paragraph (a)(2) of the Freedom of Information Act.

(2) Establish education and training programs for all DCA military members and employees who contribute to DCA's implementation of the Freedom of Information Act.

(3) Arrange for the publication in the **Federal Register**, after coordinating with the DCA General Counsel, of appropriate material detailing where, how, and by what authority DCA performs its functions as well as informing all interested persons how to deal effectively with the Agency.

(b) The Deputy Directors and the Chief of Staff, DCA, will:

(1) Furnish the CEB with copies of the material to be published in the **Federal Register**.

(2) Furnish the CEB, when requested, with DCA documentary material which qualifies as a record in accordance with 32 CFR part 286, for the purpose of responding to FOIA requests. All such requests for information will be referred to the CEB office.

(c) The Directors, Commanders, and Chiefs of DCA field activities will develop supplemental instructions to DCAI 210–225–1,[1] as required, to cover requests for information from the public which are received regularly and which usually pertain to information that may be released without question. Supplemental instructions will be submitted to the CEB for review and approval prior to implementation.

(d) The CEB, Headquarters, DCA, is vested with the authority, within DCA, to release records for all requests coming to Headquarters, DCA, and to the field activities in the Metropolitan Washington area, and will:

(1) Respond to all requests for records from private persons in accordance with 32 CFR part 286 whether the requests are received directly by Headquarters, DCA or by DCA field activities. Coordinate such release with the General Counsel in any case in which release is, or may be, controversial.

(2) By the DCA principal point of contact and coordination with the office of the Assistant Secretary of Defense (Public Affairs) (OASD(PA)).

(3) Ensure the cooperation of DCA with the OASD (PA) in fulfilling responsibilities for monitoring the implementation of 32 CFR part 286.

(4) Refer cases of significance to the OASD (PA) for review and evaluation, after coordination with the General Counsel and with the approval of the Chief of Staff, when the issues raised are unusual, precedent setting, or otherwise require special attention or guidance.

(5) Advise the OASD (PA), prior to the denial of a request or prior to an appeal when two or more DoD components are affected by the request, for a particular record and when circumstances suggest a potential public controversy.

(6) Be responsible for the annual reporting requirements contained in 32 CFR part 286.

(e) Within DCA, the sole authority to deny, in whole or in part, a request for records is vested in the DCA General Counsel (Code AL) or, in his absence, in the Deputy General Counsel. A denial by the DCA General Counsel is appealable solely to the Director, or to the Vice Director acting in the absence of the Director. The General Counsel, DCA, will:

(1) Make the decision, whenever a request for a record is to be denied in whole or in part, in accordance with the criteria provided in 32 CFR part 286.

(2) Inform the person denied a record of the basis for the denial of the request and of his or her right to appeal the decision to the Director, DCA via written correspondence.

(3) Ensure that if such an appeal is taken, that the basis for the determination by the Director, DCA refuse to release the record will be in writing, will state the reasons for the denial, and will inform the requester or his or her right to a judicial review in the appropriate U.S. district court.

(f) The Chief of Staff, Headquarters, DCA, will, on behalf of the Director, DCA, respond to the corrective or disciplinary action recommended by the Special Counsel, Merit System Protection Board for arbitrary or capricious withholding of records requested, pursuant to the Freedom of Information Act, by military members or employees of DCA. This action will be coordinated with the General Counsel, DCA.

§ 287.5 Fees.

Fees charged to the requester are contained in 32 CFR part 286.

§ 287.6 Reports.

Each major staff element and field activity on the distribution list of this DCA Instruction will furnish an annual report to the CEB, Headquarters, DCA, in accordance with 32 CFR part 286.

§ 287.7 Questions.

Questions on both the substance and procedures of the Freedom of Information Act and the DCA implementation thereof should be addressed to the CEB by the most expeditious means possible, including telephone calls. Freedom of Information Act requests should be addressed as follows: Defense Communications Agency, Attention: Code ADA, Washington, DC 20305–2000. Calls should be made to (202) 692–2006.

§ 287.8 "For Official Use Only" Records.

The designation "For Official Use Only" will be applied to documents and other material only as authorized by 32 CFR part 286.

Dated: July 30, 1990.

L.M. Bynum,

Alternate OSD Federal Register Liaison Officer, Department of Defense.

[FR Doc. 90–18077 Filed 8–3–90; 8:45 am]

BILLING CODE 3810–01–M

[1] This instruction is available from Defense Communications Agency, Washington, D.C. 20305.

DEPARTMENT OF TRANSPORTATION

Coast Guard

33 CFR Part 80

[CGD 89–068]

RIN 2115–AD44

International Regulations for Preventing Collisions at Sea; 1972 (COLREGS) Demarcation Lines

AGENCY: Coast Guard, DOT.

ACTION: Final rule.

SUMMARY: COLREGS Demarcation Lines are the boundaries separating U.S. waters on which the International and the Inland Navigation Rules apply. This rulemaking will improve safety by adjusting four COLREGS Demarcation Lines and correcting the descriptions of four other Demarcation Lines.

DATES: The final rule is effective September 5, 1990.

FOR FURTHER INFORMATION CONTACT: Mr. Harry Robertson, Navigation Rules and Information Branch, Office of Navigation Safety and Waterway Services, (202) 267–0357.

SUPPLEMENTARY INFORMATION: Regulatory History: The regulations establishing COLREGS Demarcation Lines in 33 CFR part 80 were promulgated July 11, 1977 (42 FR 35782). Some descriptions were updated to reflect geographic and marking changes, and were published on March 6, 1986, in the **Federal Register** (51 FR 7785). A notice of proposed rulemaking to adjust four COLREGS Demarcation Lines and correct the descriptions of four other Demarcation Lines was published in the **Federal Register** on January 25, 1990 (55 FR 2539). Interested parties were given until March 12, 1990, to comment. There was only one comment on the proposal. It recommended that the seaward ends of the Murrels Inlet jetties be substituted for Murrels Inlet Lights 1 and 2, since these lights were rebuilt after Hurricane Hugo farther out into the Atlantic Ocean. The Coast Guard agrees with this recommendation, and has changed § 80.703(b) of the final rule accordingly.

The comment further recommended that, because of their transitory nature, aids to navigation not be used at all to describe the boundaries. The final rule establishing the COLREGS Demarcation Lines, published in the **Federal Register** on July 11, 1977, specifies certain principles to be used in delineating the lines. "The lines are to be defined, whenever possible, by physical objects readily discernible to the mariner by eye, rather than by instrument." These

include fixed aids to navigation, jetties and other prominent objects which can be used as visual reference. The Coast Guard considers this logic sound, and sees no reason to change these principles now. Therefore, this recommendation is not accepted.

Drafting Information

The principal persons involved in drafting this document are Harry Robertson, Project Manager, Office of Navigation Safety and Waterway Services, and Christena Green, Project Counsel, Office of the Chief Counsel.

Discussion of Regulation

The Coast Guard is updating the COLREGS Demarcation Line descriptions as follows:

1. The description in § 80.703(b) is revised by adding the ends of the Murrels Inlet jetties as additional connection points in the description of the line.

2. The description in § 80.735(c) is revised by removing Biscayne Channel Light 8 as a connection point for the demarcation line in Biscayne Channel.

3. The change to § 80.1370 correctly identifies the line from Willapa Bay light as 169.8° true instead of 171° true.

4. The change to § 80.1460 correctly identifies the names of the breakwater lights.

The Coast Guard is also updating the Demarcation Line locations at the Mississippi River entrances of Southwest Pass, South Pass, and the Mississippi River Gulf Outlet. The Lower Mississippi River Advisory Committee recommended changes to §§ 80.815(g) and 80.825 (a), (b), (c) (Southwest Pass, South Pass and the Mississippi River Gulf Outlet) to reduce the confusion caused when operators of vessels exchange meeting and passing signals when navigating in these areas. The International meeting/passing signals use signals of "action" while Inland Rules require signals of "intention". The current demarcation lines are located in a heavy traffic area where vessels have to complete a large turning maneuver requiring meeting and passing signals. Operators of vessels in this area have experienced some confusion by not knowing whether the signals made are signals of "action" or "intention". The lines have been moved to a location beyond the pilot boarding area, so the entire channel entrance is under the Inland Rules. These demarcation line adjustments reduce the hazards to navigation by allowing operators of vessels to more easily determine when they are operating on COLREGS water and on Inland Rules waters so they can exchange appropriate meeting and passing signals.

Regulatory Evaluation

This rule is non-major under Executive Order 12291 and non-significant under the DOT regulatory policies and procedures (44 FR 11034; February 26, 1979). The Coast Guard certifies that this rule will not have a significant economic impact on a substantial number of small entities because there are no costs associated with these changes.

Environmental Assessment

Under section 2.B.2 of Commandant Instruction M16475.1B. this proposal is categorically excluded from further environmental documentation. A Categorical Exclusion Determination has been placed in the docket, and is available for inspection or copying where indicated under "**ADDRESSES**".

Federalism

This rule has been analyzed in accordance with the principles and criteria contained in Executive Order 12612, and it has been determined that this rulemaking does not have sufficient federalism implications to warrant the preparation of a Federalism Assessment.

List of Subjects in 33 CFR Part 80

Navigation, Navigable waters.

For the reasons stated above, the Coast Guard amends title 33, Code of Federal Regulations, as follows:

PART 80—[AMENDED]

1. The authority citation for part 80 is revised to read as follows:

Authority: 14 U.S.C. 2; 14 U.S.C. 633; 33 U.S.C. 151(a); 49 CFR 1.46.

2. Section 80.703 is amended by revising paragraph (b) to read as follows:

§ 80.703 Little River Inlet, SC to Cape Romain, SC.

* * * * *

(b) From Little River Inlet, a line drawn parallel with the general trend of the highwater shoreline across Hog Inlet; thence a line drawn across the seaward ends of the Murrels Inlet jetties; thence a line drawn parallel with the general trend of the highwater shoreline across Midway Inlet, Pawleys Inlet, and North Inlet.

* * * * *

3. Section 80.735 is amended by revising paragraph (c) to read as follows:

§ 80.735 Miami, FL to Long Key, FL.

* * * * *

(c) A line drawn from Cape Florida Light to the northernmost extremity on Soldier Key.

* * * * *

4. Section 80.815 is amended by revising paragraph (g) to read as follows:

§ 80.815 Mobile Bay, AL to the Chandeleur Islands, LA.

* * * * *

(g) A line drawn from the Ship Island Light to Chandeleur Light; thence in a curved line following the general trend of the seaward, highwater shorelines of the Chandeleur Islands to the island at latitude 29°44.' N., longitude 88°53.0' W.; thence to latitude 29°26.5' N., longitude 88°55.6' W.

5. Section 80.825 is amended by revising paragraphs (a), (b) and (c) to read as follows:

§ 80.825 Mississippi Passes, LA.

(a) A line drawn from latitude 29°26.5' N., longitude 88°55.6' W. to latitude 29°10.6' N., longitude 88°59.8' W.; thence to latitude 29°03.5' N., longitude 89°03.7' W.; thence to latitude 28°58.8' N., longitude 89°04.3' W.

(b) A line drawn from latitude 28°58.8' N., longitude 89°04.3' W.; to latitude 28°57.3' N., longitude 89°05.3' W.; thence to latitude 28°56.95' N., longitude 89°05.6' W.; thence to latitude 29°00.4' N., longitude 89°09.8' W.; thence following the general trend of the seaward highwater shoreline in a northwesterly direction to latitude 29°03.4' N., longitude 89°13.0' W.; thence west to latitude 29°03.5' N., longitude 89°15.5' W.; thence following the general trend of the seaward highwater shoreline in a southwesterly direction to latitude 28°57.7' N., longitude 89°22.3' W.

(c) A line drawn from latitude 28°57.7' N., longitude 89°22.3' W.; to latitude 28°51.4' N., longitude 89°24.5' W.; thence to latitude 28°52.65' N., longitude 89°27.1' W.; thence to the seaward extremity of the Southwest Pass West Jetty located at latitude 28°54.5' N., longitude 89°26.1' W.

* * * * *

6. Section 80.1370 is revised to read as follows:

§ 80.1370 Willapa Bay, WA.

A line drawn from Willapa Bay Light 169.8° true to the westernmost tripod charted 1.6 miles south of Leadbetter Point.

7. Section 80.1460 is revised to read as follows:

§ 80.1460 Kahului Harbor, Maui, HI.

A line drawn from Kahului Harbor Entrance East Breakwater Light to Kahului Harbor Entrance West Breakwater Light.

Dated: August 1, 1990.

J.W. Lockwood,

Captain, U.S. Coast Guard, Acting Chief, Office of Navigation Safety and Waterway Services.

[FR Doc. 90-18301 Filed 8-3-90; 8:45 am]

BILLING CODE 4910-14-M

ENVIRONMENTAL PROTECTION AGENCY

40 CFR Part 52

[FRL 3806-2]

Approval and Promulgation of Implementation Plans; California State Implementation Plan Revision, Ventura County Air Pollution Control District

AGENCY: U.S. Environmental Protection Agency (EPA).

ACTION: Final rulemaking.

SUMMARY: This notice approves revisions to the California State Implementation Plan (SIP). The revisions were submitted by the California Air Resources Board (ARB) to EPA on February 7, 1989 for inclusion in the SIP. The revisions affect the Ventura County Air Pollution Control District (APCD) and consist of reorganizing several definitions and exemptions into different rules. EPA is approving these revisions because they are minor and noncontroversial changes that do not affect emission control requirements in the existing SIP. They are consistent with the Clean Air Act, 40 CFR part 51, and EPA policy, and should be approved under section 110 of the Clean Air Act. The intended effect of approving these rules is to maintain the rules found in the California SIP.

DATES: This action is effective October 5, 1990, unless notice is received on or before September 5, 1990, that adverse or critical comments will be submitted. If the effective date is delayed, timely notice will be published in the **Federal Register.**

ADDRESSES: Comments may be sent to: Colleen McKaughan, Environmental Protection Agency, Region 9, Attn: Air and Toxics Division, State Implementation Plan Section (A-2-3), 1235 Mission Street, San Francisco, CA 94103.

Copies of the rule revisions and EPA's evaluation report for each rule are available for public inspection at EPA's Region 9 office during normal business hours. Copies of the submitted rule revisions are also available for inspection at the following locations:

California Air Resources Board, Stationary Source Division, Rule Evaluation Section, 1219 "K" Street, Post Office Box 2815, Sacramento, CA 95814.

Environmental Protection Agency, Public Information Reference Unit, 401 "M" Street SW., Washington, DC 20460.

Ventura County Air Pollution Control District, 800 South Victoria Avenue, Ventura, CA 93009.

FOR FURTHER INFORMATION CONTACT: Doris K. Lo (A-2-3), State Implementation Plan Section, Air and Toxics Division, Environmental Protection Agency, Region 9, 1235 Mission Street, San Francisco, CA 94103. Telephone: (415) 556-5244; FTS: 556-5244.

SUPPLEMENTARY INFORMATION:

Background

The following rule revisions were submitted by the ARB for incorporation into the SIP on February 7, 1989. This notice addresses minor and noncontroversial rule revisions from this SIP submittal. The following rules from the Ventura County APCD are addressed in this notice:

Rule 2, Definitions.

Rule 55, Exemptions From Emission Standards.

EPA Evaluation/Action

The revisions submitted for Rule 2, Definitions, consist of the deletion of the following definitions: Agricultural Operation, Agricultural Wastes, Ban, Brush Treated, Burn Day Crop, Forest Management Burning, No-Burn Day, Range Improvement Burning, Silvicultural, and Timber Operation. All of these definitions except Forest Management Burning, Silvicultural, and Timber Operation, have been moved to Rule 56, Open Fires, which is the only rule under which these terms are referenced. The three terms that were not moved to Rule 56 were deleted because the are not used in any of Ventura County APCD's rules.

The revisions found in Rule 55, Exemptions From Emission Standards, consist of the deletion of two exemptions: Open outdoor fires used only for recreational purposes and open fires for the disposal of Agricultural Wastes, Range Improvement/Forest Management or levee and reservoir maintenance, all at altitudes above 3000 feet mean sea level. These two exemptions have been moved to Rule 56, Open Fires, which is where they are now referenced.

The revisions listed above are consistent with section 110 of the Clean Air Act, 40 CFR part 51, and EPA policy. The revisions were made for organizational purposes and do not affect emission control requirements. Copies of the rules and of EPA's evaluation report for each rule are available at EPA's Regional Office in San Francisco.

Nothing in this action should be construed as permitting or allowing or establishing a precedent for any future request for revision to any state implementation plan. Each request for revision to the state implementation plan shall be considered separately in light of specific technical, economic, and environmental factors and in relation to relevant statutory and regulatory requirements.

EPA is publishing this action without prior proposal because the Agency views this as a noncontroversial amendment action and anticipates no adverse comments. This action will be effective October 5, 1990, unless, within 30 days of its publication, notice is received that adverse or critical comments will be submitted.

If such notice is received, this action will be withdrawn before the effective date by publishing two subsequent notices. One notice will withdraw the final action and another will begin a new rulemaking by announcing a proposal of the action and establishing a comment period. If no such comments are received, the public is advised that this action will be effective October 5, 1990.

Regulatory Process

Under 5 U.S.C. 605(b), I certify that this SIP revision will not have a significant economic impact on a substantial number of small entities. (See 46 FR 8709.)

This action has been classified as a Table 3 action by the Regional Administrator under the procedures published in the **Federal Register** on January 19, 1989 (54 FR 2214-2225). On January 6, 1989, the Office of Management and Budget waived Table 2 and 3 SIP revisions (54 FR 2222) from the requirements of section 3 of Executive Order 12291 for a period of two years.

Under section 307(b)(1) of the Act, petitions for judicial review of this action must be filed in the United States Court of Appeals for the appropriate circuit by October 5, 1990. This action may not be challenged later in proceedings to enforce its requirements. (See section 307(b)(2).)

List of Subjects in 40 CFR Part 52

Air pollution control, Hydrocarbons, Incorporation by reference,

Intergovernmental relations, Ozone and Particulate matter.

Note: Incorporation by reference of the State Implementation Plan for the State of California was approved by the Director of the Federal Register on July 1, 1982.

Dated: June 25, 1990.

Daniel W. McGovern,

Regional Administrator.

Title 40 of the Code of Federal Regulations, part 52, subpart F is amended to read as follows:

PART 52—[AMENDED]

1. The authority citation for part 52 continues to read as follows:

Authority: 42 U.S.C. 7401–7642.

Subpart F—California

2. Section 52.220 is amended by adding paragraph (c)(177) to read as follows:

§ 52.220 Identification of plan.

* * * * *

(c) * * *

(177) Revised regulations for the following APCD's were submitted by the Governor's designee on February 7, 1989.

(i) Incorporation by reference.

(A) Ventura County Air Pollution Control District.

(*1*) Amended Rules 2 and 55 adopted May 24, 1988.

* * * * *

[FR Doc. 90–17901 Filed 8–3–90; 8:45 am]

BILLING CODE 6560–50–M

---

40 CFR Part 52

[FRL–3808–1]

Approval and Promulgation of Implementation Plans; California State Implementation Plan Revision for Bay Area Air Quality Management District and Mariposa County and Ventura County Air Pollution Control Districts

AGENCY: Environmental Protection Agency (EPA).

ACTION: Final rule.

SUMMARY: This notice approves revisions to the California State Implementation Plan (SIP). The California Air Resources Board (ARB) submitted these revisions to EPA on February 7, 1989 for inclusion in the SIP. They affect the Bay Area Air Quality Management District (AQMD) and the Mariposa County and Ventura County Air Pollution Control Districts (APCDs). These revisions consist of administrative and noncontroversial rules. EPA is approving these revisions because they retain or strengthen emission control requirements in the existing SIP. They are consistent with the Clean Air Act, 40 CFR part 51, and EPA policy, and should be approved under section 110 of the Clean Air Act.

EFFECTIVE DATE: This action will be effective on October 5, 1990, unless notice is received on or before September 5, 1990, of publication that adverse or critical comments will be submitted. If the effective date is delayed, timely notice will be published in the **Federal Register.**

ADDRESSES: Comments may be sent to: Colleen W. McKaughan, Environmental Protection Agency, Region 9, Attn: Air and Toxics Division, State Implementation Plan Section (A–2–3), 1235 Mission Street, San Francisco, CA 94103.

Copies of the rules and EPA's Evaluation Reports are available for public inspection during normal business hours at the EPA Region 9 office in San Francisco. The ARB in Sacramento also has a complete set of the district rules. For information on a rule concerning a specific county, you may contact the ARB or the appropriate office listed below.

California Air Resources Board, Rule Evaluation Section, Stationary Source Section, 1219 K Street, Sacramento, CA 95814

Bay Area Air Quality Management District, 939 Ellis Street, San Francisco, CA 94109

Mariposa County Air Pollution, Control District, 4988 11th Street, Mariposa, CA 95338

Ventura County Air Pollution, Control District, 800 S. Victoria Avenue, Ventura, CA 93009

Public Information Reference Unit, U.S. Environmental Protection Agency, 401 "M" Street SW., Washington, DC 20460

FOR FURTHER INFORMATION CONTACT: Cynthia G. Allen (A–2–3), State Implementation Plan Section, Air and Toxics Division, Environmental Protection Agency, Region 9, 1235 Mission Street, San Francisco, CA 94103. Tel: (415) 556–5244 or FTS: 556–5244.

SUPPLEMENTARY INFORMATION:

Background

On February 7, 1989, the ARB officially submitted to EPA a set of revisions to the California SIP. This notice addresses non-controversial and administrative rules from this SIP submittal. The following list identifies the rules addressed in this notice.

Description of Rules

February 7, 1989 Submittal

Bay Area AQMD

Regulation 4 Air Pollution Episode Plan—Table 1, Episode Stage Criteria
Regulation 6 Particulate Matter and Visible Emissions

Mariposa County APCD

Regulation III Open Burning
Rule 300 General Definitions
Rule 301 Compliance
Rule 302 Burning Permit
Rule 303 No-Burn Day
Rule 304 Burning Management
Rule 305 Minimum Drying Times
Rule 306 Agricultural Burning
Rule 307 Wildland Vegetation Management Burning
Rule 308 Nonagricultural Burning

Ventura County APCD

Rule 56 Open Fires

EPA Evaluation

EPA has evaluated these rules for consistency with the the Clean Air Act, 40 CFR part 51, and EPA policy. EPA is approving these rule revisions because they are a strengthening of the existing SIP. The rules govern routine administrative air pollution control operations for agricultural and non-agricultural burning. The revisions include recodification of, and minor language changes to, existing rules which are expected to result in increased effectiveness and enforceability of those rules. In addition, new rules have been added setting out prohibitions for both agricultural and non-agricultural burning activities. A brief description of each county's rule changes is provided below.

Bay Area Air Quality Management District

Regulation 4, Air Pollution Episode Plan, changes the Emergency Episode Levels, listed in Table I of the regulation, for particulate matter, from total suspended particulates to PM–10, to comply with changes in the national ambient air quality standards. Regulation 4 only affects emissions when the episode criteria listed in Table I are reached or are predicted to be reached. Emissions are then reduced because sources are required to curtail their emissions in response to the episode. Regulation 4 is being approved since it strengthens the existing SIP.

The revisions to Regulation 6, Particulate Matter and Visible Emissions, consist of deleting sections 6–205 and 6–312 which created

exemptions for food processor facilities. On October 5, 1984, Bay Area AQMD submitted sections 6–205 and 6–312, Food Processing Facilities, for approval in the California SIP. On February 5, 1987 (52 FR 3644), EPA published a final rulemaking notice disapproving sections 6–205 and 6–312, because those sections violated federal new source review requirements. Since the Bay Area is now deleting sections 6–205 and 6–312 from its regulations, today's actions will delete sections 6–205 and 6–312 from 40 CFR 52.279 Food Processing Facilities. This deletion is being approved since it is consistent with the Clean Air Act and 40 CFR part 51.

Mariposa County Air Pollution Control District

In Rule 300, Definitions, several definitions from Rule 102, Definitions, approved on 1/10/75 and 6/6/77 into the California SIP, have been incorporated into the recodified rule. These definitions are as follows: agricultural operations, agricultural waste, APCO, approved ignition devices, ARB, designated agency, forest management burning, person, range improvement burning, residential rubbish, section, silvicultural practices, and timber operations. Since these definitions have already been approved by EPA into the California SIP, the relocation of these definitions into Rule 300 is also approvable.

Rule 301, Compliance, consists of a recodification and a title change from the previously approved Rule 322, Enforcement Responsibility and Rule 323, Penalty, approved on 1/10/75, and incorporated into the California SIP. Rules 322 and 323 have been incorporated into the recodified Rule 301. The recodification of this rule is being approved since it is a reorganization of rules that were previously approved.

Rule 302, Burning Permit, consists of a recodification of the previously approved Rule 303, Burning Permits, approved on 6/6/77 into the California SIP. The recodification of this rule is being approved since it is a reorganization of the rule that was previously approved.

Rule 303, No-Burn Day, consists of a recodification and a revision of the previously approved Rule 306, No-Burn Days, approved on 1/10/75 into the California SIP. The recodified rule allows the Air Pollution Control Officer (APCO) to issue a permit to authorize the use of open outdoor fires on No-Burn Days, when denial of such a permit would threaten imminent and substantial economic loss. The recodification and revision of this rule is being approved since it is a reorganization of the rule that was previously approved.

Rule 304, Burning Management, consists of a recodification into Rule 304 of the previously approved Rule 309, Amount Burned Daily, Rule 310, Approved Ignition Devices, and Rule 315, Preparation of Material to be Burned, approved on 1/10/75 into the California SIP. The recodification of this rule is being approved since it is a reorganization of rules that were previously approved.

Rule 305, Minimum Drying Times, consists of a recodification and a revision of the previously approved Rule 317, Range Improvement Burning and Rule 318, Forest Management Burning, approved on 1/10/75 into the California SIP. The revised rule allows the APCO to authorize shorter drying times if the denial of such a permit would threaten imminent and substantial economic loss. This revision represents a relaxation but has no potential impact on air quality. Since Mariposa County is classified as a Group 3 area for PM–10 EPA is approving the revision of this rule. A Group 3 area is defined as an area having less than 20 percent probability of violating the standard. It is assumed that the measures currently contained in the Mariposa SIP to control TSP are adequate to maintain the PM-10 standard. The recodification is being approved since it is a reorganization of rules that were previously approved.

Rule 306, Agricultural Burning, is a new rule which defines agricultural burning. The new rule also outlines procedures for permissive-burn or no burn days, agricultural burning requirements, and applies to all open burning which meets the definition of agricultural burning. This new rule is a strengthening of the existing SIP.

Rule 307, Wildland Vegetation Management Burning, is a new rule which outlines procedures for wildland vegetation and management burning and prescribed burning. The rule applies to all burning which meets the definition of wildland vegetation management burning. This new rule is a strengthening of the existing SIP.

Rule 308, Nonagricultural Burning, consists of a recodification into Rule 308 of the previously approved Rule 319, Open Burning of Wood Waste on Property Where Grown, Rule 320, Right-of-Way Clearing and Levee, Ditch and Reservoir Maintenance Burning, and Rule 321, Hazard Reduction Burning, approved on 1/10/75 into the California SIP. The exemptions for land development clearing, ditch and road maintenance, hazard reduction, fire suppression and training, residential maintenance, recreational activity, and mechanized burner requirements which applied to each of the previously approved rules, have been incorporated into the recodified rule. This recodification is being approved since it is a reorganization of rules that were previously approved.

Ventura County Air Pollution Control District

In Rule 56, Open Fires, several definitions from Rule 2, Definitions, approved on June 2, 1980 and two exemptions from Rule 55, Exemptions from Emission Standards, approved on September 5, 1980, have been incorporated into the revised rule. Forest management burning has been deleted from the revised rule since there are no forestry operations being conducted on private forest land in Ventura County. The rule lists purposes under which an open outdoor fire is to be conducted. The permitting agency for these fires has been shifted from the District to the agency legally authorized to allow the fires. Also, pesticides containers are no longer allowed to be burned. This revised rule is being approved since it strengthens the existing SIP.

EPA Action

EPA's review of these new and revised rules finds them consistent with the Clean Air Act, 40 CFR part 5 and EPA policy. EPA is approving these rule revisions and recodifications because they maintain or strengthen the existing SIP. Therefore, EPA is taking final action to approve these rules under section 110 of the Clear Air Act.

Nothing in this action should be construed as permitting or allowing or establishing precedent for any future request for revision to any state implementation plan. Each request for revision to the state implementation plan shall be considered separately in light of specific technical, economic, and environmental factors and in relation to relevant statutory and regulatory requirements.

EPA is publishing this action without prior proposal because the Agency views this as a noncontroversial amendment action and anticipates no adverse comments. This action will be effective October 5, 1990, unless, within 30 days of its publication, notice is received that adverse or critical comments will be submitted.

If such notice is received, this action will be withdrawn before the effective date by publishing two subsequent notices. One notice will withdraw the final action and another will begin a new rulemaking by announcing a

proposal of the action and establishing a comment period. If no such comments are received, the public is advised that this action will be effective October 5, 1990.

Regulatory Process

Under 5 U.S.C. 605(b), I certify that this SIP revision will not have a significant economic impact on a substantial number of small entities. (See 46 FR 8709.)

This action has been classified as a Table 3 action by the Regional Administrator under the procedures published in the **Federal Register** on January 19, 1989 (54 FR 2214–2225). On January 6, 1989, the Office of Management and Budget waived Table 2 and 3 SIP revisions (54 FR 2222) from the requirements of section 3 of Executive Order 12291 for a period of two years.

Under section 307(b)(1) of the Act, petitions for judicial review of this action must be filed in the United States Court of Appeals for the appropriate circuit by October 5, 1990. This action may not be challenged later in proceedings to enforce its requirements. (See section 307(b)(2).)

List of Subjects in 40 CFR Part 52

Air pollution control, Carbon monoxide, Incroporation by reference, Intergovernmental relations, Nitrogen oxide, Ozone, Particulate matter, and Reporting and recordkeeping requirements.

Note: Incorporation by reference of the State Implementation Plan for the State of California was approved by the Director of the **Federal Register** on July 1, 1982.

Dated: June 25, 1990.

Daniel W. McGovern,

Regional Administrator.

Subpart F of part 52, chapter I, title 40 of the Code of Federal Regulations is amended as follows

PART 52—[AMENDED]

1. The authority citation for part 52 continues to read as follows:

Authority: 42 U.S.C. 7401–7642.

Subpart F—California

2. Section 52.220 is amended by adding paragraphs (c)(177)(i) (A)(*2*), (c)(177)(i) (B)(*1*), and (c)(177)(i) (C)(*1*) to read read as follows:

§ 52.220 Identification of plan.

* * * * *

(C) * * *

(177) * * *

(i) * * *

(A) * * *

(*2*) Amended Rule 56 adopted May 24, 1988.

(B) Bay Area Air Quality Management District.

(*1*) Amended Regulation 4 adopted September 7, 1988.

(C) Mariposa County Air Pollution Control District.

(*1*) Amended Regulation III and Rules 300, 301, 302, 303, 304, 305, 306, 307, and 308 adopted July 19, 1988.

3. Section 52.279 is amended by revising paragraph (a)(2) to read as follows:

§ 52.279 Food processing facilities.

(a) * * *

(2) Bay Area Air Quality Management District sections 2–2–119, 2–2–120. adopted on September 19, 1984, and submitted on October 5, 1984.

[FR Doc. 90–17902 Filed 8–3–90; 8:45 am]

BILLING CODE 6560–50–M

FEDERAL EMERGENCY MANAGEMENT AGENCY

44 CFR Part 65

[Docket No. FEMA–6995]

Changes in Flood Elevation Determinations; Alaska, et al.

AGENCY: Federal Emergency Management Agency.

ACTION: Interim rule.

SUMMARY: This rule lists those communities where modification of the base (100-year) flood elevations is appropriate because of new scientific or technical data. New flood insurance premium rates will be calculated from the modified base (100-year) elevations for new buildings and their contents and for second layer insurance on existing buildings and their contents.

DATES: These modified elevations are currently in effect and amend the Flood Insurance Rate Map (FIRM) in effect prior to this determination.

From the date of the second publication of notice of these changes in a prominent local newspaper, any person has ninety (90) days in which he can request through the community that the Administrator, reconsider the changes. These modified elevations may be changed during the 90-day period.

ADDRESSES: The modified base (100-year) flood elevation determinations are available for inspection at the office of the Chief Executive Officer of the community, listed in the fifth column of the table. Send comments to that address also.

FOR FURTHER INFORMATION CONTACT: Mr. John L. Matticks, Chief, Risk Studies Division, Federal Insurance Administration, Federal Emergency Management Agency, Washington, DC 20472, (202) 646–2767.

SUPPLEMENTARY INFORMATION: The numerous changes made in the base (100-year) flood elevations on the FIRM(s) make it administratively infeasible to publish in this notice all of the modified base (100-year) flood elevations contained on the map. However, this rule includes the address of the Chief Executive Officer of the community where the modified base (100-flood) flood elevation determinations are available for inspection.

Any request for reconsideration must be based on knowledge of changed conditions, or new scientific or technical data.

These modifications are made pursuant to section 206 of the Flood Disaster Protection Act of 1973 (Pub. L. 93–234) and are in accordance with the National Flood Insurance Act of 1968, as amended (Title XIII of the Housing and Urban Development Act of 1968 (Pub. L. 90–448)), 42 U.S.C. 4001–4128, and 44 CFR 65.4.

For rating purposes, the revised community number is listed and must be used for all new policies and renewals.

These base (100-year) flood elevations are the basis for the floodplain management measures that the community is required to either adopt or show evidence of being already in effect in order to qualify or remain qualified for participation in the National Flood Insurance Program.

These elevations, together with the floodplain management measures required by § 60.3 of the program regulations are the minimum that are required. They should not be construed to mean the community must change any existing ordinances that are more stringent in their floodplan management requirements. The community may at any time, enact stricter requirements on its own, or pursuant to policies established by other Federal, State or regional entities.

The changes in the base (100-year) flood elevations listed below are in accordance with 44 CFR 65.4.

Pursuant to the provisions of 5 U.S.C. 605(b), the Administrator, to whom authority has been delegated by the Director, Federal Emergency Management Agency, hereby certifies that this rule if promulgated will not have a significant economic impact on a substantial number of small entities. This rule provides routine legal notice of technical amendments made to designated special flood hazard areas on the basis of updated information and

imposes no new requirements or regulations on participating communities.

List of Subjects in 44 CFR Part 65

Flood insurance, Floodplains.

PART 65—[AMENDED]

1. The authority citation for part 65 continues to read as follows:

Authority: 42 U.S.C. 4001 et seq., Reorganization Plan No. 3 of 1978, E.O. 12127.

§ 65.4 [Amended]

2. Section 65.4 is amended by adding in alphabetical sequence new entries to the table.

State and county	Location	Date and name of newspaper where notice was published	Chief executive officer of community	Effective date of modification	Community number
Alaska: Anchorage Division.	Municipality of Anchorage...	*Anchorage Daily News*, July 20 and July 27, 1990.	The Honorable Tom Fink, Mayor, Municipality of Anchorage, P.O. Box 196650, Anchorage, Alaska 99519-6650.	June 21, 1990.....	020005 C
California: Orange.....	City of Anaheim.....	*Anaheim Bulletin*, June 22 and June 29, 1990.	The Honorable Fred Hunter, Mayor, City of Anaheim, Office of the City Clerk, P.O. Box 3222, Anaheim, California 92803.	June 15, 1990.....	060213 E
California: Sacramento.....	City of Sacramento.....	*Sacramento Bee*, June 21 and June 28, 1990.	The Honorable Anne Rudin, Mayor, City of Sacramento, 915 I Street, Room 205, Sacramento, California 95814-2672.	June 15, 1990.....	060266 E
Illinois: Cook.....	Unincorporated areas.....	July 19, 1990, July 26, 1990, *Chicago Tribune*.	The Honorable George W. Dunne, President, Cook County Board of Commissioners, County Building, 118 N. Clark Street, Chicago, Illinois 60602.	July 10, 1990.....	170054
Iowa: Dubuque.....	Unincorporated areas.....	June 15, 1990, June 22, 1990, *Dubuque Telegraph Herald*.	The Honorable Donna L. Smith, Chairperson, Dubuque County Board of Supervisors, County Courthouse, 720 Central Avenue, Dubuque, Iowa 52001.	May 31, 1990.....	190534
Iowa: Dubuque.....	City of Sageville.....	June 15, 1990, June 22, 1990, *Dubuque Telegraph-Herald*.	The Honorable Ralph Dea, Mayor, City of Sageville, 11948 Sherril Road, Dubuque, Iowa 52001.	June 4, 1990.....	190122
Oklahoma: Oklahoma.....	City of Midwest City.....	June 28, 1990, July 5, 1990, *The Midwest City Sun*.	The Honorable John G. Johnson, Mayor of the City of Midwest City, 100 North Midwest Boulevard, P.O. Box 10570, Midwest City, Oklahoma 73140.	June 1, 1990.....	400405 D
Texas: Fort Bend.....	Unincorporated areas.....	July 12, 1990, July 19, 1990, *The Herald-Coaster*.	The Honorable Jodie E. Stavinoha, Fort Bend County Judge, P.O. Box 368, Richmond, Texas 77469.	June 28, 1990.....	480228

Issued: July 20, 1990.

Harold T. Duryee,

Administrator, Federal Insurance Administration.

[FR Doc. 90-18280 Filed 8-3-90; 8:45 am]

BILLING CODE 6718-03-M

44 CFR Part 65

Changes in Flood Elevation Determinations; North Carolina et al.

AGENCY: Federal Emergency Management Agency.

ACTION: Final rule.

SUMMARY: Modified base (100-year) flood elevations are finalized for the communities listed below.

These modified elevations will be used in calculating flood insurance premium rates for new buildings and their contents and for second layer coverage on existing buildings and their contents.

DATES: The effective dates for those modified base flood elevations are indicated on the following table and amend the Flood Insurance Rate Map(s) (FIRM) in effect for each listed community prior to this date.

ADDRESSES: The modified base flood elevations for each community are available for inspection at the office of the Chief Executive Officer of each community. The respective addresses are listed on the following table.

FOR FURTHER INFORMATION CONTACT: Mr. John L. Matticks, Chief, Risk Studies Division, Federal Insurance Administration, Federal Emergency Management Agency, Washington, DC 20472. (202) 646-2767.

SUPPLEMENTARY INFORMATION: The Federal Emergency Management Agency gives notice of the final determinations of modified flood elevations for each community listed. These modified elevations have been published in newspaper(s) of local circulation and ninety (90) days have elapsed since that publication. The Administrator has resolved any appeals resulting from this notification.

Numerous changes made in the base (100-year) flood elevations on the FIRMs for each community make it administratively infeasible to publish in this notice all of the changes contained on the maps. However, this rule includes the address of the Chief Executive Officer of the community, where the modified base flood elevation determinations are available for inspection.

The modifications are made pursuant to section 206 of the Flood Disaster

Protection Act of 1973 (Pub. L. 93–234) and are in accordance with the National Flood Insurance Act of 1968, as amended (Title XIII of the Housing and Urban Development Act of 1968, (Pub. L. 90–448), 42 U.S.C. 4001–4128, and 44 CFR part 65.

For rating purposes, the revised community number is shown and must be used for all new policies and renewals.

The modified base (100–year) flood elevations are the basis for the floodplain management measures that the community is required to either adopt or show evidence of being already in effect in order to qualify or to remain qualified for participating in the National Flood Insurance Program.

These modified elevations, together with the floodplain management measures required by § 60.3 of the program regulations, are the minimum that are required. They should not be construed to mean that the community must change requirements. The community may at any time enact stricter requirements of its own, or pursuant to policies established by other Federal, State or regional entities.

These modified base flood elevations shall be used to calculate the appropriate flood insurance premium rates for new buildings and their contents and for second layer coverage on existing buildings and their contents.

The changes in the base flood elevations are in accordance with 44 CFR 65.4.

Pursuant to the provisions of 5 USC 605(b), the Administrator, to whom authority has been delegated by the Director, Federal Emergency Management Agency, hereby certifies that this rule, if promulgated, will not have a significant economic impact on a substantial number of small entities. This rule provides routine legal notice of technical amendments made to designated special flood hazard areas on the basis of updated information and imposes no new requirements or regulations on participating communities.

List of Subjects in 44 CFR Part 65

Flood insurance, Floodplains.

PART 65—[AMENDED]

1. The authority citation for part 65 continues to read as follows:

Authority: 42 U.S.C. 4001 et seq., Reorganization Plan No. 3 of 1978, E.O. 12127.

§ 65.4 [Amended]

2. Section 65.4 is amended by adding in alphabetical sequence new entries to the table.

State and County	Location	Date and name of newspaper where notice was published	Chief executive officer of community	Effective date of modification	Community No.
North Carolina: Union (Docket No. FEMA–6986).	City of Monroe	Mar. 2, 1990, Mar. 9, 1990, *Monroe Inquirer Journal.*	The Hon. Lynn A. Keziah, Mayor, City of Monroe, P.O. Box 69, Monroe, NC 28110.	Feb. 20, 1990	370236
Tennessee: Davidson (Docket No. FEMA–6988).	City of Nashville	Apr. 6, 1990, Apr. 13, 1990, *Tennessean Nashville Banner.*	The Hon. William H. Boner, Mayor, City of Nashville and Davidson County, Metro Courthouse, Room 106, Nashville, TN 37201.	Mar. 27, 1990	470040

Harold T. Duryee,

Administrator, Federal Insurance Administration.

Issued: July 20, 1990.

[FR Doc. 90–18281 Filed 8–3–90; 8:45 am]

BILLING CODE 6718–03–M

44 CFR Part 67

Final Flood Elevation Determinations; Alabama et al.

AGENCY: Federal Emergency Management Agency.

ACTION: Final rule.

SUMMARY: Modified base (100-year) flood elevations are finalized for the communities listed below.

These modified elevations are the basis for the floodplain management measures that the community is required to either adopt or show evidence of being already in effect in order to qualify or remain qualified for participation in the National Flood Insurance Program.

EFFECTIVE DATE: The date of issuance of the Flood Insurance Rate Map (FIRM) showing modified base flood elevations, for the community. This date may be obtained by contacting the office where the maps are available for inspection indicated on the table below:

ADDRESSES: See table below:

FOR FURTHER INFORMATION CONTACT: Mr. John L. Matticks, Chief, Risk Studies Division, Federal Insurance Administration, Federal Emergency Management Agency, Washington, DC 20472, (202) 646–2767.

SUPPLEMENTARY INFORMATION: The Federal Emergency Management Agency gives notice of the final determinations of flood elevation for each community listed. Proposed base flood elevations or proposed modified base flood elevations have been published in the **Federal Register** for each community listed.

This final rule is issued in accordance with section 110 of the Flood Disaster Protection Action 1968 (title XIII of the Housing and Urban Development Act of 1968 (Pub. L. 90–448)), 42 U.S.C. 4001–4128, and 44 CFR part 67. An opportunity for the community or individuals to appeal the proposed determination to or through the community for a period of ninety (90) days has been provided.

The Agency has developed criteria for floodplain management in flood-prone areas in accordance with 44 CFR part 60. Pursuant to the provisions of 5 U.S.C. 605(b), the Administrator, to whom authority has been delegated by the Director, Federal Emergency Management Agency, hereby certifies for reasons set out in the proposed rule that the final flood elevation determinations, if promulgated, will not have a significant economic impact on a substantial number of small entities. Also, this rule is not a major rule under terms of Executive Order 12291, so no regulatory analyses have been proposed. It does not involve any collection of information for purposes of The Paperwork Reduction Act.

List of Subjects in 44 CFR Part 67

Flood insurance, Floodplains.

PART 67—[AMENDED]

1. The authority citation for part 67 continues to read as follows:

Authority: 42 U.S.C. 4001 et seq., Reorganization Plan No. 3 of 1978, E.O. 12127.

Interested lessees and owners of real property are encouraged to review the proof Flood Insurance Study and FIRM available at the address cited below for each community.

The modified base flood elevations are finalized in the communities listed below. Elevations at selected locations in each community are shown. Any appeals of the proposed base flood elevations which were received have been resolved by the Agency.

Source of flooding and location	#Depth in feet above ground. *Elevation in feet (NGVD). Modified
Alabama	
Birmingham (city), Jefferson County (FEMA Docket No. 6989)	
Jail Branch:	
At mouth	*559
About 350 feet upstream of mouth	*560
Just upstream of Norfolk Southern Railway	*567
Just downstream of 6th Avenue	*575
Jail Branch Tributary:	
At mouth	*568
Just downstream of 6th Avenue	*586
Maps available for inspection at the Community Planning Department, 710 North 20th Street, Birmingham, Alabama.	
Arizona	
Coconino County (unincorporated areas) (FEMA Docket No. 6989)	
Switzer Canyon Wash:	
Approximately 1,100 feet upstream of San Francisco Street	*7,013
Approximately 2,075 feet upstream of San Francisco Street	*7,020
Approximately 2,975 feet upstream of San Francisco Street	*7,026
Maps available for review at the Coconino County Department of Community Development, 219 East Cherry Avenue, Flagstaff, Arizona.	
California	
Hemet (city), Riverside County (FEMA Docket No. 6985)	
Park Hill Drain:	
200 feet downstream of corporate limits	*1,565
Maps are available for review at the Hemet Planning Department, 450 East Latham Avenue, Hemet, California 92343.	
Napa County (unincorporated areas) (FEMA Docket No. 6989)	
Napa River:	
Approximately 10,640 feet downstream of Yountville Cross Road Bridge	*82
Approximately 5,340 feet downstream of Yountville Cross Road Bridge	*87
Just downstream of Yountville Cross Road Bridge	*94
Approximately 6,060 feet downstream of Yountville Cross Road Bridge	*111
Maps are available for review at the Office of the Director of Public Works, 1195 Third Street, Room 201, Napa, California.	
Yountville (town), Napa County (FEMA Docket No. 6989)	
Napa River:	
Intersection of Washington Street and Land Lane	*85
Intersection of Vista Drive and Vineyard Circle	*88
Just upstream of Yountville Cross Road	*94
Just downstream of Yount Mill Road	*99
Maps are available for review at Town Hall, 6550 Yount Street, Yountville, California.	

Source of flooding and location	#Depth in feet above ground. *Elevation in feet (NGVD). Modified
COLORADO	
Broomfield (city), Adams, Boulder, and Jefferson Counties (FEMA Docket No. 6985)	
Nissen Reservoir Channel (Broomfield Basin 3207):	
At Sheridan Boulevard	None
Approximately 40 feet downstream of East Midway Boulevard	None
Approximately 20 feet downstream of East Midway Boulevard	*5,301
Approximately 30 feet upstream of Birch Street	*5,309
Approximately 30 feet upstream of Ash Street	*5,320
At East 10th Avenue	*5,343
Maps are available for review at City Hall, City Clerk's Office, Number Six Garden Office Center, Broomfield, Colorado.	
Erie (town), Boulder and Weld Counties (FEMA Docket No. 6989)	
Coal Creek:	
Just upstream of Union Pacific Railroad	*5,022
Approximately 10,500 feet upstream of Perry Street	*5,052
Approximately 1,250 feet downstream of confluence with Cottonwood Extension Ditch	*5,064
At west end of East-West Runway, TriCounty Airport	*5,084
Approximately 4,100 feet upstream of East-West Runway, TriCounty Airport	*5,092
Maps are available for review at Town Hall, P.O. Box 100, 645 Holbrook, Erie, Colorado.	
LOUISIANA	
Iowa (town), Calcasieu Parish (FEMA Docket No. 6985)	
Lateral 14B-2:	
Approximately 40 feet upstream of U.S. Route 90	*17
Approximately 450 feet downstream of State Route 383	*19
Maps available for inspection at City Hall, 115 N. Thompson, Iowa, Louisiana.	
Lake Charles (city), Calcasieu Parish (FEMA Docket No. 6985)	
Kayouche Coulee:	
Approximately 125 feet upstream of Southern Pacific Railroad	*11
Upstream side of East Prien Lake Road	*13
Maps available for inspection at City Hall, 326 Pujo Street, Lake Charles, Louisiana.	
MICHIGAN	
Charter Township of Delhi, Ingham County (FEMA Docket No. 6989)	
Mud Lake Drain:	
At mouth	*839
Just downstream of Aurelius Road	*842
Maps available for inspection at the Delhi Charter Township, 1974 Cedar Street, Holt, Michigan, Attention: Rick Royston, Building Inspector.	
Lansing (city), Ingham, Eaton and Clinton Counties (FEMA Docket No. 6989)	
Mud Lake Drain:	
Just upstream of Aurelius Road	*842
Just upstream of Conrail	*844
Just downstream of Interstate 96	*863
Maps available for inspection at the City of Lansing Planning Division, 119 N. Washington, Lansing, Michigan.	
MONTANA	
Flathead County (unincorporated Areas) (FEMA Docket No. 6983)	
Flathead River:	
Approximately 800 feet upstream of Foys Bend Lane	*2,902
Approximately 4,350 feet upstream of Foys Bend Lane	*2,903
Approximately 4,800 feet upstream of Foys Bend Lane	*2,903
Maps available for review at the Flathead Regional Development Office, 723 5th Avenue East, Kalispell, Montana.	
NEW YORK	
Amherst (town), Erie County (FEMA Docket No. 6985)	
Ellicott Creek:	
Upstream side of U.S. Route 62	*573
Approximately 350 feet upstream of Maple Road	*591
Gott Creek:	
Approximately 2,400 feet upstream of French Road	*584
At downstream side of Transit Road	*592
Ellicott Creek—North Diversion Channel:	
At confluence with Ellicott Creek	*573
At divergence from Ellicott Creek	*575
Ellicott Creek—Plohl Park Diversion Channel:	
At confluence with Ellicott Creek	*576
At divergence from Ellicott Creek	*577
Ellicott Creek—Upper Diversion Channel:	
At confluence with Ellicott Creek	*584
At divergence from Ellicott Creek	*588
Maps available for inspection at the Town Clerk's Office, 5583 Main Street, Williamsville, New York.	
NORTH CAROLINA	
Boiling Spring Lakes (city), Brunswick County (FEMA Docket No. 6985)	
Boiling Spring Lake: Within community	*35
Maps available for inspection at P.O. Box 2410, Boiling Spring Lakes Branch, Southport, North Carolina.	
Sylva (town), Jackson County (FEMA Docket No. 6985)	
Scott Creek:	
About 0.80 mile downstream of SR 1382	*1993
Just downstream of Skyland Drive	*2072
Maps available for inspection at the Town Hall, 11 Allen Street, Sylva, North Carolina.	
OKLAHOMA	
Chandler (city), Lincoln County (FEMA Docket No. 6985)	
Bellcow Creek:	
Approximately 150 feet downstream of 1st Street West	*846
Approximately 200 feet upstream of Lake Road	*861
Bellcalf Creek:	
Approximately 175 feet downstream of Lake Road	*853
Approximately 130 feet upstream of Lake Road	*859
Maps available for inspection at the City Hall, 1001 Steele Street, Chandler, Oklahoma.	
Moffett (town), Sequoyah County (FEMA Docket No. 6985)	
Arkansas River:	
At upstream side of U.S. Route 64	*419
Approximately 1.25 miles upstream of U.S. Route 64	*421
Maps available for inspection at the City Hall, Moffett, Oklahoma.	
Sallisaw (city), Sequoyah County (FEMA Docket No. 6985)	
Sallisaw Creek:	
Approximately .7 mile downstream of Interstate Route 40	*484
Approximately 500 feet downstream of Union Pacific Railroad	*510
Tributary 3:	

Source of flooding and location	#Depth in feet above ground. *Elevation in feet (NGVD). Modified
Approximately 1,800 feet above confluence with Little Sallisaw Creek	*481
Approximately .6 mile above confluence with Little Sallisaw Creek	*490
Shiloh Creek:	
Upstream side of Interstate Route 40	*495
Approximately 50 feet upstream of Kansas City Southern Railroad	*537
Approximately 700 feet upstream of Meadowlark Street	*567
Tributary 7:	
At confluence with Shiloh Creek	*507
Approximately 150 feet downstream of U.S. Route 59	*544
Hog Creek:	
Approximately .6 mile upstream of Redwood Avenue	*509
Approximately 1,300 feet upstream of U.S. Route 59	*542
Maps available for inspection at the Sallisaw City Hall, 111 N. Elm Street, Sallisaw, Oklahoma.	
PENNSYLVANIA	
Abington (township), Montgomery County (FEMA Docket No. 6985)	
Pennypack Creek:	
Approximately 160 feet upstream of the downstream corporate limits	*99
At upstream corporate limits	*118
Meadow Brook:	
Approximately 1,150 feet upstream of confluence with Pennypack Creek	*116
Approximately 1,120 feet upstream of Susquehanna Road	*179
Baeder Run:	
At confluence with Talcony Creek	*220
Approximately 265 feet upstream of Abington Avenue	*301
Maps available for inspection at the Township Building, 1176 Old York Road, Abington, Pennsylvania.	
Boggs (township), Centre County (FEMA Docket No. 6985)	
Spring Creek:	
At downstream corporate limits	*702
At upstream corporate limits	*720
Moose Run:	
Downstream side of interchange between U.S. Route 220	*702
Approximately 1.1 miles upstream of T-668 (Dell Street)	*806
Maps available for inspection at the Township Municipal Building, Runville, Bellefonte, Pennsylvania.	
Warminster (township), Bucks County (FEMA Docket No. 6985)	
Blair Mill Run:	
At the corporate limits	*262
Approximately 800 feet upstream of corporate limits	*265
Blair Mill Run Tributary:	
At the corporate limits	*250
Approximately 500 feet upstream of Van Horn Drive	*289
Maps available for inspection at the Township Building, Henry and Gibson Avenues, Warminster, Pennsylvania.	
Puerto Rico (commonwealth) Rio Piedras Basin (FEMA Docket No. 6985)	
Canal Puerto Nuevo:	
At confluence of Cano de Martin Peña	**2.0
Approximately 1,600 meters above Avenida John F. Kennedy	**3.0
Cano de Martin Peña:	
At confluence with Canal Puerto Nuevo	**2.0
At downstream side of Puerto Rico Route 1 bridge	**2.0
Rio Espiritu Santo:	
At confluence with Atlantic Ocean	**2.0
At the downstream side of Puerto Rico Highway 3	**2.8
Rio Grande: At the confluence with Rio Espiritu Santo	**2.8
**Elevation in Meters (Mean Sea Level)	
Maps available for inspection at the minillas Governmental Center, 13th Floor, North Building, De Diego Avenue, Stop 22, San Juan, Puerto Rico.	
TENNESSEE	
Knoxville (city), Knox County (FEMA Docket No. 6989)	
Whites Creek:	
At mouth	*955
Just downstream of Nora Road	*967
Just downstream of Greenway Drive	*965
Maps available for inspection at the Department of Engineering, P.O. Box 1631, Knoxville, Tennessee.	
TEXAS	
Carrollton (city), Dallas, Denton, and Collin Counties (FEMA Docket No. 6943)	
Hutton Branch:	
Upstream side of St. Louis and Southwestern Railway	*442
Approximately 2,450 feet downstream of Ryan Road	*462
Elm Fork of Trinity River:	
At confluence of Cooks Branch	*438
At upstream corporate limits	*454
Cooks Branch: At confluence with Elm Fork of Trinity River	*438
Stream 6D1: Approximately 45 feet upstream of Jackson Road	*496
Stream 6D3:	
At upstream side of 2nd crossing of St. Louis-San Francisco Railway	*517
Approximately 360 feet downstream of Marsh Lane	*607
Furneaux Creek: At confluence with Elm Fork of Trinity River	*448
Dudley Branch:	
50 feet upstream of confluence with Elm Fork of Trinity River	*452
At confluence of Trinity River	*478
Approximately 75 feet upstream of Rosemeade Parkway	*484
At upstream side of Hebron Parkway	*555
Stream 6F1: At confluence with Dudley Branch	*478
Indian Creek:	
At confluence with Elm Fork of Trinity River	*453
Approximately .77 mile downstream of Denton Road	*461
Approximately 100 feet upstream of Denton Road	*474
Maps available for inspection at the Engineering Department, City Hall, 1945 Jackson Road, Carrollton, Texas.	
Graham (city), Young County (FEMA Docket No. 6985)	
Dry Creek:	
Downstream side of State Route 16	*1,036
Upstream side of Corp limits (City of Graham) approximately 500 feet south of Mimosa Circle	*1,036
Stream GR-2:	
Approximately 2,600 feet upstream of confluence with Dry Creek	*1,067
Approximately 5,400 feet upstream with Dry Creek	*1,082
Maps available for inspection at the City Hall, Graham, Texas.	
WEST VIRGINIA	
Brooke County (unincorporated areas) (FEMA Docket No. 6985)	
Harmon Creek:	
Approximately 0.79 mile upstream of confluence with Ohio River	*672
Approximately 1,430 feet downstream of County Route 1-3	*698
Maps available for inspection at the County Courthouse, 632 Main Street, Wellsburg, West Virginia 26070.	

Issued: July 20, 1990.

Harold T. Duryee,

Administrator, Federal Insurance Administration.

[FR Doc. 90-18279 Filed 8-3-90; 8:45 am]

BILLING CODE 6718-03-M

Proposed Rules

Federal Register
Vol. 55, No. 151
Monday, August 6, 1990

This section of the FEDERAL REGISTER contains notices to the public of the proposed issuance of rules and regulations. The purpose of these notices is to give interested persons an opportunity to participate in the rule making prior to the adoption of the final rules.

DEPARTMENT OF AGRICULTURE

Food Safety and Inspection Service

9 CFR Parts 312, 322, 327 and 381

[Docket No. 90-004P]

Imported Canadian Product: Further Implementation of the United States-Canada Free-Trade Agreement

AGENCY: Food Safety and Inspection Service, USDA.

ACTION: Proposed rule; re-opening of comment period.

SUMMARY: On June 29, 1990, the Food Safety and Inspection Service (FSIS) published a proposed rule to amend the Federal meat and poultry products inspection regulations by exempting Canadian meat and poultry products intended to be imported into the United States from the requirements contained in parts 327 and 381 of those regulations, including the requirement that imported product be subject to reinspection by United States import inspectors. FSIS is also proposing to amend parts 327 and 381 to exempt the Canadian inspection system from various requirements applicable to other foreign countries desiring to obtain/or maintain their eligibility to export product to the United States, and to relieve USDA officials from conducting certain review activities. FSIS is also proposing to amend part 312 of the regulations by adding a new export stamp to be applied by United States establishments to product intended for export to Canada. In addition, FSISA is proposing to amend part 322 of the regulations by waiving the requirement that an export certificate be issued and accompany product intended for export to Canada and by providing for the use of the new export stamp on product intended for export to Canada. Lastly, FSIS is proposing to amend parts 322, 327 and 381 to provide new procedures applicable to United States establishments exporting product to Canada and to Canadian establishments exporting product to the United States. This proposal would further the goal of the United States-Canada Free-Trade Agreement signed by President Reagan on January 2, 1988, by reducing trade restrictions between the United States and Canada.

FSIS has received requests to extend the comment period so that additional data and information can be provided. FSIS has determined that the requests should be granted and, therefore, is re-opening the comment period for an additional 30 days.

DATES: Comments due on or before September 5, 1990.

ADDRESSES: Written comments to: Policy Office, ATTN: Linda Carey, FSIS Hearing Clerk, room 3171 South Agriculture Building, Food Safety and Inspection Service, U.S. Department of Agriculture, Washington, DC 20250. Oral comments as provided by the Poultry Products Inspection Act should be directed to Ms. Patricia Stolfa, at (202) 447-3473.

FOR FURTHER INFORMATION CONTACT: Ms. Patricia Stolfa, Deputy Administrator, International Programs, Food Safety and Inspection Service, U.S. Department of Agriculture, Washington, DC 20250, Area Code (202) 447-3473.

SUPPLEMENTARY INFORMATION: On January 2, 1988, President Reagan signed the United States-Canada Free-Trade Agreement. Pursuant to Article 2105, the "Agreement shall enter into force on January 1, 1989, upon exchange of diplomatic notes certifying the completion of necessary legal procedures by each party." To implement the United States obligations of the Agreement, the Congress passed and President Reagan signed into law the United States-Canada Free-Trade Agreement Implementation Act of 1988, Public Law 100-449. One goal of the Agreement is to utilize each other's personnel for testing and inspection of agricultural, food, beverage, and certain related goods. In furtherance of this goal, in February 1990, USDA and Agriculture Canada agreed to implement, on a one-year basis, an experimental open border agreement with regard to meat and poultry inspection.

In furtherance of that agreement, on June 29, 1990, FSIS published a proposed rule (55 FR 26695) to amend the Federal meat and poultry products inspection regulations in various respects as discussed above. Interested persons were given until July 30, 1990, to comment in response to this proposed rule. FSIS has received requests to extend the comment period to allow additional time for data and information to be gathered and submitted. FSIS is interested in receiving this information and is, therefore, re-opening the comment period for an additional 90 days.

Done at Washington, DC on July 31, 1990.

Lester M. Crawford,

Administrator, Food Safety and Inspection Service.

[FR Doc. 90-18228 Filed 8-3-90; 8:45 am]

BILLING CODE 3410-DM-M

DEPARTMENT OF THE TREASURY

Office of the Comptroller of the Currency

12 CFR Part 4

[Docket No. 90-13]

Description of Office, Procedures, Public Information Supervision of Bank Operations

AGENCY: Office of the Comptroller of the Currency, Treasury.

ACTION: Notice of proposed rulemaking.

SUMMARY: The Office of the Comptroller of the Currency ("OCC") is proposing to amend its rule concerning the examination and supervision of national banks. The proposal (1) implements the examination schedule set forth in 12 U.S.C. 481, as amended; (2) provides a general description of the scope and content of the OCC's reports and examinations; (3) clarifies the OCC's authority to require as part of the examination process that national banks and related entities provide information to examiners not located on the bank's premises; (4) clarifies the obligation of national banks and their related entities and persons to provide true and correct information in reports and answers to examination queries filed with the OCC; and (5) clarifies the definition of "Report of Examination" as that term is used in certain statutes.

DATES: Comments on the proposed rule must be received on or before September 5, 1990.

ADDRESSES: Interested persons are invited to submit written comments to Docket No. 90–13, Communications Division, 5th Floor, Office of the Comptroller of the Currency, 490 L'Enfant Plaza East, SW., Washington, DC 20219, Attention: Karen Carter. Comments will be available for inspection and photocopying at the same location.

FOR FURTHER INFORMATION CONTACT: Ford Barrett, Assistant Director, Legislative and Regulatory Analysis Division, (202) 447–1177, Office of the Comptroller of the Currency, 490 L'Enfant Plaza East, SW., Washington, DC 20219.

SUPPLEMENTARY INFORMATION: Public Law 96–221, title VII, section 709, 94 Stat. 1881, amended 12 U.S.C. 481 by authorizing national bank examinations as often as the Comptroller deems necessary and eliminating a requirement for examinations twice in every year. This proposed rule conforms § 4.11(a) to the statutory amendment.

This proposed rule also updates the current description of the scope and content of the reports required and examinations conducted by the OCC.

The proposal would amend § 4.11(a) to reflect that as part of the OCC's examination authority under 12 U.S.C. 481, and wholly independent of its authority to request special call reports under 12 U.S.C. 161, the OCC may require national banks and related entities to provide information to examining staff not located on the bank's premises, *i.e.*, off-site. The OCC has, for many years, asked banks to submit information in this manner, and this authority is clearly part of OCC's examination power.

For similar reasons, the proposed rule reaffirms the obligation of national banks and related persons and entities under 12 U.S.C. 481 to provide the OCC with complete, true, and correct information in all reports and in all answers to examination queries. This obligation is implied in section 481, and the proposal would make the obligation express. See also 18 U.S.C. 1001 and 1005, as well as 12 U.S.C. 164 which, as amended by section 911 of the Financial Institutions Reform, Recovery, and Enforcement Act of 1989, Public Law 101–73, establishes penalties for failing to transmit a report or information required under 12 U.S.C. 161 or for submitting a false or misleading report or information. The proposed rule also states in § 4.11(c) that OCC may take enforcement action against any bank, affiliate, or institution-affiliated party not providing complete, true and correct information in response to examination queries.

Finally, proposed § 4.11(d) states that a Report of Supervisory Activity is a "report of examination" for purposes of 12 U.S.C. 92a(c), 371c(b)(10), 481, 1817(a)(2), 1844(c), 2255, and 3105(b)(1).

Regulatory Flexibility Act

Pursuant to the Regulatory Flexibility Act, 5 U.S.C. 605(b), the Comptroller of the Currency certifies that these changes, if adopted, will not have a significant economic impact on a substantial number of small entities. Accordingly, a Regulatory Flexibility Analysis is not required. Small entities are already required to comply with the procedures established in the existing regulation and, since the purpose of this rulemaking is to clarify and to provide general guidance, no burden is imposed.

Executive Order 12291

The OCC has determined that these changes serve to clarify existing procedures. Therefore, this proposal does not constitute a major rule within the meaning of Executive Order 12291 and does not require a Regulatory Impact Analysis. The proposed rulemaking will not have an annual impact on the economy of $100 million or more; will not result in a major increase in the cost of bank operations or government supervision; and will not have a significant adverse effect on competition, employment, investment, productivity, or innovation.

List of Subjects in 12 CFR Part 4

Examination, National banks, Supervision.

Authority and Issuance

For the reasons set forth in the preamble, chapter I, part 4 of title 12, Code of Federal Regulations, is proposed to be amended as set forth below:

PART 4—[AMENDED]

1. The authority citation for part 4 is revised to read as follows:

Authority: 12 U.S.C. 93a, 164, 1861–1867; 5 U.S.C. 552.

2. Section 4.11 is amended by revising paragraphs (a) and (b)(1)–(b)(5) and adding (b)(7), (c) and (d) to read as follows:

§ 4.11 Supervision of bank operations.

(a) *Examination of banks.* All national banks, their subsidiaries and affiliates, and unaffiliated companies providing bank services to such institutions, hereinafter collectively referred to as ("banking organizations"), will be examined as often as the Comptroller of the Currency may, in his or her sole discretion, deem necessary. The scope and content of an examination depends upon the circumstances of the banking organization and may focus on, among other things, the banking organization's condition, safety and soundness, or its compliance with laws or regulations. As part of the examination process, the Comptroller of the Currency may require banking organizations to provide information to examining staff not located on their premises, *i.e.*, off-site. Further, all national banks, their subsidiaries, affiliates, any institution-affiliated party (as defined in 12 U.S.C. 1813(u)), and any person providing services to such institutions shall provide complete, true and correct information to the Comptroller of the Currency in all submissions and in all responses to any examination query.

(b) *Reports of banks*—(1) *Reports of Condition and Income.* Each national bank must file with the Comptroller of the Currency Consolidated Reports of Condition and Income (FFIEC 031–034) as of the last business day of each quarter unless otherwise specified. Such Reports shall be filed in accord with the FFIEC Instructions for Consolidated Reports of Condition and Income for Insured Commercial Banks. In addition, each national bank must submit, for each of its branches in a foreign country, Puerto Rico, or a U.S. territory or possession (including trust territories), a Foreign Branch Report of Condition (Form FFIEC 030) once a year as of the end of December, unless otherwise specified.

(2) *Affiliate Reports.* When required by the Comptroller of the Currency, each national bank with one or more affiliates, including holding company affiliates, must submit with its Consolidated Reports of Condition and Income a report of condition and income of each such affiliate.

(3) *Trust Department Reports.* Each national bank that is authorized to exercise fiduciary powers must submit annually to the Comptroller of the Currency, on the dates specified by the Comptroller, reports on the extent of fiduciary activities and the income and expenses arising from such activities. The following reports are required:

(i) An Annual Report of Trust Assets (FFIEC 001) completed in accordance with FFIEC instructions.

(ii) A Special Report—Fiduciary Activities completed in accordance with OCC instructions.

(iii) National banks with branches, subsidiaries or affiliates located outside the 50 states of the United States and

the District of Columbia must file the Annual Report of International Fiduciary Activities (FFIEC 006) in accordance with FFIEC instructions.

(4) *Reports of International Operations.* The International Operations Regulation (part 20 of this chapter) requires a national bank to notify the Comptroller of the Currrency prior to the occurrence of certain events (12 CFR 20.3), and to report to the Comptroller after the occurrence of certain other events (12 CFR 20.4). In addition, part 20 requires a national bank to file with the Comptroller of the Currency the Monthly Consolidated Foreign Currency Report of Banks in the United States on Form FFIEC 035 (12 CFR 20.5) and to file with the Comptroller quarterly Country Exposure Reports on Form FFIEC 009 (12 CFR 20.10).

(5) *Reports of Federally Licensed Branches and Agencies of Foreign Banks.* In accordance with 12 U.S.C. 3105(b)(2), each federally licensed branch and agency of a foreign bank must file the quarterly Report of Assets and Liabilities of U.S. Branches and Agencies of Foreign Banks on Form FFIEC 002; the quarterly Country Exposure Report for U.S. Branches and Agencies of Foreign Banks on Form FFIEC 019, if applicable; and the Monthly Consolidated Foreign Currency Report of Banks in the United States on Form FFIEC 035, if applicable (12 CFR 20.5).

* * * * *

(7) *Other Reports.* Pursuant to 12 U.S.C. 161, 481, and 1867, the Comptroller may also call for additional reports from national banks, their subsidiaries and affiliates (including holding company affiliates) or companies providing bank services to those institutions. Such additional reports can be required whenever the Comptroller determines, in his or her sole discretion, that additional reports are necessary for performing the Comptroller's supervisory duties. Those reports shall be submitted on the dates and in the form required.

(c) *Penalties.* A national bank, its affiliates, or its institution-affiliated parties (as defined in 12 U.S.C. 1813(u)) that violates this regulation by failing to submit information required, in oral or written form, by an examination query, or by submitting information that is not complete, true and correct, is subject to administrative actions and penalties under 12 U.S.C. 93, 504, 164, and 1818. Additionally, those persons may be subject to criminal penalties under 18 U.S.C. 1001 and 1005.

(d) *Report of Examination.* The Report of Supervisory Activity is a "report of examination" for purposes of the following statutes: 12 U.S.C. 92a(c), 371c(b)(10), 481, 1817(a)(2), 1844(c), 2255, and 3105(b)(1).

Dated: July 31, 1990.

Robert L. Clarke,

Comptroller of the Currency.

[FR Doc. 90-18240 Filed 8-3-90; 8:45 am]

BILLING CODE 4810-33-M

DEPARTMENT OF THE INTERIOR

Office of Surface Mining Reclamation and Enforcement

30 CFR Part 931

New Mexico Permanent Regulatory Program

AGENCY: Office of Surface Mining Reclamation and Enforcement (OSM), Interior.

ACTION: Proposed rule; reopening and extension of comment period on proposed amendment.

SUMMARY: OSM is announcing receipt of additional explanatory information and revisions pertaining to a previously proposed amendment to the New Mexico permanent regulatory program (hereinafter, the "New Mexico program") under the Surface Mining Control and Reclamation Act of 1977 (SMCRA). The additional explanatory information and revisions pertain to records retention, previously mined area, stream buffer zones, fish and wildlife resources, coal exploration, areas unsuitable for mining, permitting, coal processing waste, hydrology, and revegetation. The amendment is intended to revise the State program to be consistent with the corresponding Federal standards, incorporate the additional flexibility afforded by the revised Federal regulations, clarify ambiguities, and improve operational efficiency.

This notice sets forth the times and locations that the New Mexico program and proposed amendment to that program are available for public inspection, and the reopened comment period during which interested persons may submit written comments on the proposed amendment.

DATES: Written comments must be received by 4 p.m. m.d.t. August 21, 1990.

ADDRESSES: Written comments should be mailed or hand delivered to Robert H. Hagen at the address listed below.

Copies of the New Mexico program, the proposed amendment, and all written comments received in response to this notice will be available for public review at the addresses listed below during normal business hours, Monday through Friday, excluding holidays. Each requester may receive one free copy of the proposed amendment by contacting OSM's Albuquerque Field Office.

Robert H. Hagen, Director, Albuquerque Field Office, Office of Surface Mining Reclamation and Enforcement, 625 Silver Avenue, SW., Suite 310, Albuquerque, New Mexico 87102, telephone: (505) 766-1486

New Mexico Energy & Minerals Department, Mining & Minerals Division, 2040 South Pacheco, Santa Fe, NM 87505, telephone: (505) 827-5970.

FOR FURTHER INFORMATION CONTACT: Robert H. Hagen, Director, Albuquerque Field Office, at the address or telephone number listed in **"ADDRESSES."**

SUPPLEMENTARY INFORMATION:

I. Background on the New Mexico Program

On December 31, 1980, the Secretary of the Interior conditionally approved the New Mexico program. General background information on the New Mexico program, including the Secretary's findings, the disposition of comments, and the conditions of approval of the New Mexico program, can be found in the December 31, 1980, **Federal Register** (45 FR 86489). Subsequent actions concerning New Mexico's program and program amendments can be found at 30 CFR 931.12, 931.15, 931.16, and 931.30.

II. Proposed Amendment

By letter dated March 15, 1990 (Administrative Record No. NM-566), New Mexico submitted a proposed amendment to its permanent regulatory program pursuant to SMCRA. New Mexico submitted the proposed amendment in response to an August 14, 1986, letter that OSM sent in accordance with 30 CFR 732.17(c) (Administrative Record No. NM-566). The public comment period ended April 30, 1990.

During its review of the amendment, OSM identified concerns relating to: Records retention policy; general grading requirements at Coal Surface Mining Commission (CSMC) Rule 80-1-20-102; stream buffer zones at CSMC Rule 80-1-20-57; fish and wildlife resources at CSMC Rules 80-1-8-20 and 80-1-9-16; coal exploration at CSMC Rule 80-1-6-10; areas unsuitable for mining at CSMC Rule 80-1-2-12; permitting at CSMC Rules 80-1-8-24 and 80-1-11-19; coal processing waste at

Rules 80–1–20–82 and 80–1–20–83; hydrology at CSMC Rule 80–1–20–52; and revegetation at CSMC Rules 80–1–20–112, 80–1–20–116, and 80–1–20–117. OSM notified New Mexico of the concerns by letter dated June 1, 1990 (Administrative Record No. NM–590).

New Mexico responded in a letter dated July 11, 1990, by submitting additional explanatory information and a revised amendment package (Administrative Record No. NM–598). The rules that New Mexico proposes to amend are: Records retention policy; previously mined area at CSMC Rule 80–1–1–5; stream buffer zones at CSMC Rule 80–1–20–57; coal exploration at CSMC Rule 80–1–6–10; areas unsuitable for mining at CSMC Rule 80–1–2–12; permitting at CSMC Rules 80–1–8–24 and 80–1–11–19; coal processing waste at CSMC Rule 80–1–20–82; hydrology at CSMC Rule 80–1–20–52; and revegetation at CSMC Rule 80–1–20–112. New Mexico is withdrawing CSMC Rules 80–1–8–20 and 80–1–9–16 concerning fish and wildlife resources, and CSMC Rule 80–1–20–116 concerning revegetation.

III. Public Comment Procedures

OSM is reopening the comment period on the proposed New Mexico program amendment to provide the public an opportunity to reconsider the adequacy of the additional materials submitted. In accordance with the provisions of 30 CFR 732.17(h), OSM is seeking comments on whether the proposed amendment satisfies the applicable program approval criteria of 30 CFR 732.15. If the amendment is deemed adequate, it will become part of the New Mexico program.

Written comments should be specific, pertain only to the issues proposed in this rulemaking, and include explanations in support of the commenter's recommendations. Comments received after the time indicated under "DATES" or at locations other than the Albuquerque Field Office will not necessarily be considered in the final rulemaking or included in the Administrative Record.

List of Subjects in 30 CFR Part 931

Intergovernmental relations, Surface mining, Underground mining.

Dated: July 26, 1990.

Raymond L. Lowrie,

Assistant Director, Western Field Operations.

[FR Doc. 90–18262 Filed 8–3–90; 8:45 am]

BILLING CODE 4310–05–M

30 CFR Part 931

New Mexico Permanent Regulatory Program

AGENCY: Office of Surface Mining Reclamation and Enforcement (OSM), Interior.

ACTION: Proposed rule; reopening and extension of comment period on proposed amendment.

SUMMARY: OSM is announcing receipt of a revision pertaining to a previously proposed amendment to the New Mexico permanent regulatory program (hereinafter, the "New Mexico program") under the Surface Mining Control and Reclamation Act of 1977 (SMCRA). The revision pertains to the definition of "affected area." New Mexico has also withdrawn from further consideration the definition of "previously mined areas," and critieria for permit approval or denial. The amendment is intended to revise the State program to be consistent with the corresponding Federal standards.

This notice sets forth the times and locations that the New Mexico program and proposed amendment to that program are available for public inspection, and the reopened comment period during which interested persons may submit written comments on the proposed amendment.

DATES: Written comments must be received by 4 p.m., m.d.t. August 21, 1990.

ADDRESSES: Written comments should be mailed or hand delivered to Robert H. Hagen at the address listed below.

Copies of the New Mexico program, the proposed amendment, and all written comments received in response to this notice will be available for public review at the addresses listed below during normal business hours, Monday through Friday, excluding holidays. Each requester may receive one free copy of the proposed amendment by contracting OSM's Albuquerque Field Office.

Robert H. Hagen, Director, Alburquerque Field Office, Office of Surface Mining Reclamation and Enforcement, 625 Silver Avenue SW., suite 310, Albuquerque, New Mexico 87102, Telephone: (505) 766–1486

New Mexico Energy & Minerals Department, Mining & Minerals Division, 2040 South Pacheco, Santa Fe, NM 87505, Telephone: (505) 827–5970

FOR FURTHER INFORMATION CONTACT: Robert H. Hagen, Director, Albuquerque Field Office, at the address in "**ADDRESSES.**" Telephone: (505) 766–1486.

SUPPLEMENTARY INFORMATION:

I. Background on the New Mexico Program

On December 31, 1980, the Secretary of the Interior conditionally approved the New Mexico program. General background information on the New Mexico program, including the Secretary's findings, the disposition of comments, and the conditions of approval of the New Mexico program, can be found in the December 31, 1980, **Federal Register** (45 Fr 86489). Subsequent actions concerning New Mexico's program and program amendments can be found at 30 CFR 931.12, 931.15, and 931.30.

II. Proposed Amendment

By letter dated May 25, 1989 (Administrative Record No. NM–499), New Mexico submitted a proposed amendment to its permanent regulatory program pursuant to SMCRA. New Mexico submitted the proposed amendment in response to an November 3, 1988, letter that OSM sent in accordance with 30 CFR 732.17(c) (Administrative Record No. NM–457). OSM published a notice in the June 16, 1989, **Federal Register** (54 FR 25592) announcing receipt of the amendment and inviting public comment on the adequency of the proposed amendment (Administrative Record No. NM–512). The public comment period ended July 17, 1989.

OSM notified New Mexico of concerns pertaining to the proposed amendment by letter dated August 4, 1989 (Administrative Record No. NM–527). New Mexico responded in a letter dated February 19, 1990, by submitting a revised amendment (Administrative Record No. NM–561). OSM published a notice in the March 6, 1990, **Federal Register** (55 FR 7920) reopening the comment period on the proposed amendment. OSM did so to provide the public the opportunity to reconsider the adequacy of the proposed amendment (Administrative Record No. NM–565). The public comment period ended March 21, 1990.

By letter dated May 29, 1990 (Administrative Record No. NM–587), New Mexico withdrew from the revised amendment the proposed revisions to the definition of "previously mined areas" at CSMC Rule 80–1–1–5, and to criteria for permit approval or denial at CSMC Rule 80–1–11–19(q).

During its review of the amendment, OSM identified concerns relating to the policy statement for the definition of "affected areas." OSM notified New Mexico of these concerns on May 31,

1990. New Mexico responded in a letter dated July 12, 1990, by submitting a revised amendment (Administrative Record No. NM–599). New Mexico proposes to further revise the policy on the definition of "affected area" at CSMC Rule 80–1–1–5.

III. Public Comment Procedures

OSM is reopening the comment period on the proposed New Mexico program amendment to provide the public an opportunity to reconsider the adequacy of the additional material submitted. In accordance with the provisions of 30 CFR 732.17(h), OSM is seeking comments on whether the proposed amendment satisfies the applicable program approval criteria of 30 CFR 732.15. If the amendment is deemed adequate, it will become part of the New Mexico program.

Written comments should be specific, pertain only to the issues proposed in this rulemaking, and include explanations in support of the commenter's recommendations. Comments received after the time indicated under "**DATES**" or at locations other than the Albuquerque Field Office will not necessarily be considered in the final rulemaking or included in the Administrative Record.

List of Subjects in 30 CFR Part 931

Intergovernmental relations, Surface mining, Underground mining.

Dated: July 27, 1990.

Raymond L. Lowrie,

Assistant Director, Western Field Operations.

[FR Doc. 90–18263 Filed 8–3–90; 8:45 am]

BILLING CODE 4310–05–M

---

30 CFR Part 936

Oklahoma Permanent Regulatory Program

AGENCY: Office of Surface Mining Reclamation and Enforcement (OSM), Interior.

ACTION: Proposed rule; reopening and extension of comment period on proposed amendment.

SUMMARY: OSM is announcing receipt of revisions pertaining to a previously proposed amendment to the Oklahoma permanent regulatory program (hereinafter, the " Oklahoma program") under the Surface Mining Control and Reclamation Act of 1977 (SMCRA). The proposed amendment pertains to selective husbandry practices, ponds regulated by the Mine Safety and Health Administration (MSHA), design and certification of primary roads, incremental bonding, bond release, subsidence damage, prime farmland soil substitution, and the definition of surface coal mining operations. The amendment is intended to revise the State program to be consistent with the corresponding Federal standards.

This notice sets forth the times and locations that the Oklahoma program and proposed amendment to that program are available for public inspection, the comment period during which interested persons may submit written comments on the proposed amendment.

DATES: Written comments must be received by 4 p.m., c.d.t. September 5, 1990.

ADDRESSES: Written comments should be mailed or hand delivered to James H. Moncrief at the address listed below.

Copies of the Oklahoma program, the proposed amendment, and all written comments received in response to this notice will be available for public review at the addresses listed below during normal business hours, Monday through Friday, excluding holidays. Each requester may receive one free copy of the proposed amendment by contracting OSM's Tulsa Field Office.

James H. Moncrief Director, Tulsa Field Office, Office of Surface Mining Reclamation and Enforcement, 5100 East Skelly Drive, suite 550, Tulsa, OK 74135, Telephone (918) 581–6430

Oklahoma Department of Mines, 4040 Lincoln, Oklahoma City, OK 74103, Telephone: (918) 521–3859.

FOR FURTHER INFORMATION CONTACT: James H. Moncrief, Director, Tulsa Field Office, at the address listed in "**ADDRESSES.**" Telephone: (918) 581–6430.

SUPPLEMENTARY INFORMATION:

I. Background on the Oklahoma Program

On January 19, 1981, the Secretary of the Interior conditionally approved the Oklahoma program. General background information on the Oklahoma program, including the Secretary's findings, the disposition of comments, and the conditions of approval of the Oklahoma program, can be found in the January 19, 1981, **Federal Register** [46 FR 4910], April 2, 1982 [47 FR 14152], May 4, 1983 [48 FR 20050], and August 28, 1984 [49 FR 34000]. Subsequent actions concerning Oklahoma program and program amendments can be found at 30 CFR 936.15, 936.16, and 936.30.

II. Proposed Amendment

By letter dated March 30, 1990 (administrative record No. OK–913), Oklahoma submitted a proposed amendment to its program under SMCRA. Oklahoma submitted the proposed amendment in response to a February 12, 1990, letter (administrative record No. OK–910) that OSM sent in accordance with 30 CFR 732.17(c). The regulations that Oklahoma proposed to amend concern the approval of selective husbandry practices without extending the period of responsibility for revegetation success and bond liability; submission of plans to Oklahoma for impoundments meeting the size or other criteria of MSHA; design and certification of primary roads, and incremental bonding.

OSM published a notice in the April 13, 1990 **Federal Register** [55 FR 14979] announcing receipt of the March 30, 1990, amendment and inviting public comment on the adequacy of the proposed amendment. The public comment period closed on May 14, 1990.

During its review of the March 30, 1990, amendment package, OSM identified concerns relating to: Normal husbandry practices; permanent and temporary impoundments; plans and drawings certification and construction certification of primary roads; and performance bonds. OSM notified Oklahoma of its concerns in a letter dated June 14, 1990 (administrative record No. OK–927). In a letter dated July 13, 1990, (administrative record No. OK–930) Oklahoma responded to OSM's concerns with a revised proposed amendment package.

In response to a previously unaddressed requirement of OSM's February 12, 1990, 30 CFR part 732 letter, Oklahoma's July 13, 1990, letter contains a proposed amendment to Oklahoma's surface coal mining act, at 45 O.S. 1981, section 742.2, concerning the definition of surface coal mining operations.

In a letter dated July 22, 1990, (administrative record No. OK–931), OSM notified Oklahoma, pursuant to 30 CFR 732.17(f)(1), of additional changes necessary to make the Oklahoma program no less effective than the Federal regulations. In response to this letter, Oklahoma's July 13, 1990, letter contains proposed changes to sections 784.20 and 817.121 concerning damage caused by subsidence from underground mines.

Oklahoma's July 13, 1990, letter also contains, in response to required amendments at 30 CFR 936.16, proposed amendments to sections 800.40 concerning bond release inspections and 823.12 concerning prime farmland soil substitution.

Public Comment Procedures

OSM is reopening the comment period on the proposed Oklahoma program amendment to provide the public an opportunity to reconsider the adequacy of the amendment in light of the additional materials submitted on July 13, 1990. In accordance with the provisions of 30 CFR 732.17(h), OSM is seeking comments on whether the proposed amendment satisfies the applicable program approval criteria of 30 CFR 732.15. If the amendment is deemed adequate, it will become part of the Oklahoma program.

Written comments should be specific, pertain only to the issues proposed in this rulemaking, and include explanations in support of the commenter's recommendations. Comments received after the time indicated under "DATES" or at locations other than the Tulsa Field Office will not necessarily be considered in the final rulemaking or included in the administrative record.

List of Subjects in 30 CFR Part 936

Intergovernmental relations, Surface mining, Underground mining.

Dated: July 27, 1990.

Raymond L. Lowrie,

Assistant Director, Western Field Operations.

[FR Doc. 90-18264 Filed 8-3-90; 8:45 am]

BILLING CODE 4310-05-M

---

30 CFR Part 936

Oklahoma Permanent Regulatory Program

AGENCY: Office of Surface Mining Reclamation and Enforcement (OSM), Interior.

ACTION: Proposed rule; reopening and extension of comment period on proposed amendment.

SUMMARY: OSM is announcing receipt of revisions pertaining to a previously proposed amendment to the Oklahoma permanent regulatory program (hereinafter, the "Oklahoma program") under the Surface Mining Control and Reclamation Act of 1977 (SMCRA). The proposed amendment pertains to an exemption for the extraction of coal incidental to the extraction of other minerals. The amendment is intended to revise the State program to be consistent with the corresponding Federal standards.

This notice sets forth the times and locations that the Oklahoma program and the proposed amendment to the program are available for public inspection and reopens the comment period during which interested persons may submit written comments on the proposed amendment.

DATES: Written comments must be received by 4 p.m., c.d.t. August 21, 1990.

ADDRESSES: Written comments should be mailed or hand delivered to James H. Moncrief at the address listed below.

Copies of the Oklahoma program, the proposed amendment, and all written comments received in response to this notice will be available for public review at the addresses listed below during normal business hours, Monday through Friday, excluding holidays. Each requester may receive one free copy of the proposed amendment by contacting OSM's Tulsa Field Office.

James H. Moncrief, Director, Tulsa Field Office, Office of Surface Mining Reclamation and Enforcement, 5100 East Skelly Drive, suite 550, Tulsa, OK 74135, Telephone (918) 581-6430.

Oklahoma Department of Mines, 4040 N. Lincoln, Oklahoma City, OK 74103, Telephone: (918) 521-3859.

FOR FURTHER INFORMATION CONTACT: James H. Moncrief, Director, Tulsa Field Office, at the address listed in "**ADDRESSES.**" Telephone: (918) 581-6430.

SUPPLEMENTARY INFORMATION:

I. Background on the Oklahoma Program

On January 19, 1981, the Secretary of the Interior conditionally approved the Oklahoma program. General background information on the Oklahoma program, including the Secretary's findings, the disposition of comments, and the conditions of approval of the Oklahoma program, can be found in the January 19, 1981, **Federal Register** (46 FR 4910), April 2, 1982 (47 FR 14152), May 4, 1983 (48 FR 20050), and August 28, 1984 (49 FR 34000). Subsequent actions concerning the Oklahoma program and program amendments can be found at 30 CFR 936.15, 936.16, and 936.30.

II. Proposed Amendment

By letter dated March 30, 1990, (administrative record No. OK-914), Oklahoma submitted a proposed amendment to its program under SMCRA. Oklahoma submitted the proposed amendment in response to (1) a February 7, 1990, letter (administrative record No. OK-909) that OSM sent in accordance with 30 CFR 732.17(c), and (2) a required program amendment at 30 CFR 936.16(a). The regulations that Oklahoma proposed to amend concern an exemption for operations where the extraction of coal is incidental to the extraction of other minerals.

OSM published a notice in the April 20, 1990, **Federal Register** [55 FR 14979] announcing receipt of the March 30, 1990, amendment and inviting public comment on the adequacy of the proposed amendment. The public comment period closed on May 21, 1990.

During its review of the March 30, 1990, amendment package, OSM identified concerns relating to the cumulative measurement period and administrative review of exemption decisions. OSM notified Oklahoma of its concerns in a letter dated June 20, 1990 (administrative record No. OK-928). In a letter dated July 13, 1990, (administrative record No. OK-929) Oklahoma responded to OSM's concerns with a revised proposed amendment.

Public Comment Procedures

OSM is reopening the comment period on the proposed Oklahoma program amendment to provide the public an opportunity to reconsider the adequacy of the amendment in light of the additional materials submitted on July 13, 1990. In accordance with the provisions of 30 CFR 732.17(h), OSM is seeking comments on whether the proposed amendment satisfies the applicable program approval criteria of 30 CFR 732.15. If the amendment is deemed adequate, it will become part of the Oklahoma program.

Written comments should be specific, pertain only to the issues proposed in this rulemaking, and include explanations in support of the commenter's recommendations. Comments received after the time indicated under "DATES" or at locations other than the Tulsa Field Office will not necessarily be considered in the final rulemaking or included in the administrative record.

List of Subjects in 30 CFR Part 936

Intergovernmental relations, Surface mining, Underground mining.

Dated: July 27, 1990.

Raymond L. Lowrie,

Assistant Director, Western Field Operations.

[FR Doc. 90-18265 Filed 8-3-90; 8:45 am]

BILLING CODE 4310-05-M

DEPARTMENT OF TRANSPORTATION

Coast Guard

33 CFR Part 117

CGD5-90-026

Drawbridge Operation Regulations; Atlantic Intracoastal Waterway, Elizabeth River, Southern Branch, Chesapeake, Virginia

AGENCY: Coast Guard, DOT.

ACTION: Notice of proposed rulemaking.

SUMMARY: At the request of concerned motorists, the Coast Guard is considering changing the regulations that govern the operation of the Dominion Boulevard drawbridge across the Southern Branch of the Elizabeth River, Atlantic Intracoastal Waterway, mile 8.8, in Chesapeake, Virginia, by restricting bridge openings during the morning and evening rush hours. The proposed changes to these regulations are, to the extent practical and feasible, intended to provide for regularly scheduled drawbridge openings to help reduce motor vehicle traffic delays and congestion on the roads and highways linked by this drawbridge.

DATES: Comments must be received on or before September 20, 1990.

ADDRESSES: Comments should be mailed to Commander (ob), Fifth Coast Guard District, 431 Crawford Street, Portsmouth, Virginia 23704-5004. The comments and other materials referenced in this notice will be available for inspection and copying at the above address, room 507, between 8 a.m. and 4 p.m., Monday through Friday, except Federal holidays. Comments may be hand-delivered to this address.

FOR FURTHER INFORMATION CONTACT: Ann B. Deaton, Bridge Administrator, Fifth Coast Guard District, at (804) 398-6222.

SUPPLEMENTARY INFORMATION: Interested persons are invited to participate in this rulemaking by submitting written comments or data. Persons submitting comments or data should include their names and addresses, identify the bridge, and give reasons for concurrence with or any recommended changes to the proposal. The Commander, Fifth Coast Guard District, will evaluate all communications received and determine a final course of action on this proposal. The proposed regulation may be changed based on comments and data received.

Drafting Information

The drafters of this notice are Alesia Steinberger, project officer, and CAPT. M. K. CAIN, project attorney.

Discussion of Proposed Regulations

If adopted, this regulation would eliminate openings of the Dominion Boulevard drawbridge across the Southern Branch of the Elizabeth River, Atlantic Intracoastal Waterway at mile 8.8 in Chesapeake, Virginia, during peak highway traffic hours to help reduce traffic congestion, but open on signal during the rest of the time. Currently, the draw opens on signal at all times. This proposed schedule is based on a two-year study of the drawlogs during the period October 1987 through October 1989 and a review of highway traffic counts across the bridge. The study was broken down monthly during the hours of 6 a.m. to 9 a.m. and 3 p.m. to 6 p.m., Monday through Friday. The drawbridge logs showed as many as 170 draw openings per month during the selected hours between 3 p.m. and 6 p.m. and traffic tallies reflect an hourly vehicle volume of over 1,000 cars per hour during the weekday hours of 6 a.m. to 9 a.m. and 3 p.m. to 6 p.m. The proposed change would close the Dominion Boulevard Bridge to commercial, recreational, tour boats and public vessels Monday through Friday, except Federal holidays, from 6 a.m. to 9 a.m. and from 3 p.m. to 6 p.m. A provision that allows the draw to open on signal at all times for vessels in distress is being made a part of this proposal.

Draw openings during the peak traffic hours have been causing lengthy highway traffic backups. According to the Virginia Department of Transportation, these backups do not automatically return to a normal traffic flow when the draw is closed. It generally takes a period of time lasting longer than the rush hours for traffic to recover and return to normal flow. The problems often worsens as a result of vehicles overheating and experiencing mechanical problems that frequently occur during traffic stoppage. The bridge is heavily traveled throughout the day, with heaviest traffic volumes occurring during the morning and evening rush hours.

This proposal would amend title 33, Code of Federal Regulations, § 117.997 of redesignating the regulation for the S168 bridge, mile 12 at Chesapeake (Great Bridge) as paragraph (e) and designating this regulation as paragraph (d).

The Coast Guard believes these proposed restrictions will not unduly restrict vessel passage through the bridge, as vessel operators and the marine industry can plan transits around the proposed schedule.

Federalism Assessment

This action has been analyzed in accordance with the principles and criteria contained in Executive Order 12612, and it has been determined that the proposed rule will not raise sufficient federalism implications to warrant the preparation of a Federalism Assessment.

Economic Assessment and Certification

These proposed regulations are not considered major under Executive Order 12291 on Federal Regulation nor significant under the Department of Transportation regulatory policies and procedures (44 FR 11034; February 26, 1979). The economic impact of the proposed regulation on commercial navigation or on any industries that depend on waterborne transportation should be minimal. Because the economic impact of this proposal is expected to be minimal, the Coast Guard certifies that, if adopted, it will not have a significant economic impact on a substantial number of small entities.

Environmental Impact

This rulemaking has been thoroughly reviewed by the Coast Guard and it has been determined to be categorically excluded from further environmental documentation in accordance with section 2.B.2.g.5 of Commandant Instruction M16475.1B. A Categorical Exclusion Determination statement has been prepared and placed in the rulemaking docket.

List of Subjects in 33 CFR Part 117

Bridges.

Regulations

In consideration of the foregoing, the Coast Guard proposes to amend part 117 of title 33, Code of Federal Regulations to read as follows:

PART 117—DRAWBRIDGE OPERATION REGULATIONS

1. The authority citation for part 117 continues to read as follows:

Authority: 33 U.S.C. 499; 49 CFR 1.46; 33 CFR 1.05-1(g).

2. Section 117.997(d) is redesignated as § 117.997(e) and new paragraph § 117.997(d) is added to read as follows:

§ 117.997 Atlantic intracoastal waterway, southern branch of the Elizabeth River to the Albemarle and Chesapeake Canal.

* * * * *

(d) The draw of the Dominion Boulevard Bridge, mile 8.8, in

Chesapeake shall open on signal, except that:

(1) From 6 a.m. to 9 a.m. and from 3 p.m. to 6 p.m., Monday through Friday, except Federal holidays, the draw will remain closed to all vessel traffic.

(2) The draw shall open on signal at all times for vessels in distress.

* * * * *

Dated: July 23, 1990.

P.A. Welling,

Rear Admiral, U.S. Coast Guard Commander, Fifth Coast Guard District.

[FR Doc. 90-18302 Filed 8-3-90; 8:45 am]

BILLING CODE 4910-14-M

DEPARTMENT OF VETERANS AFFAIRS

38 CFR Part 36

RIN 2900-AE20

Loan Guaranty: Title Evidence Requirements and Occupancy Requirements for Conveyance of Properties to VA by Holders

AGENCY: Department of Veterans Affairs.

ACTION: Proposed regulatory amendments.

SUMMARY: The Department of Veterans Affairs (VA) is proposing to amend its loan guaranty regulations (38 CFR part 36) as follows: (1) By authorizing the Secretary of Veterans Affairs to specify the title documentation required from the holder when VA acquires a property which was financed with a VA guaranteed loan that has been terminated; (2) by authorizing the Secretary to establish a date by which VA must receive such title documentation from the holder; and (3) by requiring that a property acquired by VA shall be vacant when conveyed to the Secretary unless it is occupied by someone properly in possession by virtue of a redemption period or the holder is otherwise directed by the Secretary.

The proposed regulatory amendments will provide for VA to reimburse the holder for reasonable and customary charges incurred in having a property vacated. The proposed amendments will also provide for the holder to reimburse the Secretary for expenses incurred by VA in connection with the property if the holder fails to deliver acceptable title evidence by the due date and the Secretary returns custody of the property to the holder.

DATES: Comments must be received on or before September 5, 1990. Comments will be available for public inspection until September 17, 1990. VA proposes to make these regulatory amendments effective 30 days after publication of the final regulations.

ADDRESSES: Interested persons are invited to submit written comments, suggestions or objections regarding this proposal to the Secretary of Veterans Affairs (271A), Department of Veterans Affairs, 810 Vermont Avenue NW., Washington, DC 20420. All written comments will be available for public inspection in room 132, Veterans Service Unit, at the above address between the hours of 8:00 a.m. and 4:30 p.m., Monday through Friday (except holidays) until September 17, 1990.

A copy of any comments that concern information collection requirements should also be sent to the Office of Management and Budget at the address contained in the Paperwork Reduction section of this preamble.

FOR FURTHER INFORMATION CONTACT: Mr. Leonard A. Levy, Assistant Director for Loan Management (261), Loan Guaranty Service, Veterans Benefits Administration, Department of Veterans Affairs, Washington, DC 20420, (202) 233-3668.

SUPPLEMENTARY INFORMATION: The Department of Veterans Affairs is proposing to incorporate into its regulations several changes to § 36.4320 of 38 CFR part 36.

Currently § 36.4320 provides that in a case where a loan holder is conveying a property to the Secretary incident to the termination of a VA guaranteed loan, the loan holder may select any of the six forms of title documentation to provide the Secretary as evidence of title. The proposed amendments will give the Secretary, as purchaser of the property, rather than the holder, the authority to specify the form of title evidence that is acceptable. With this authority the Secretary will be in a position to establish, to the extent practicable, a nationwide uniform standard for acceptable title evidence.

At present, each VA regional office, attempts to establish an acceptable title evidence requirement for properties within its jurisdiction. However, lenders are not required by regulation to comply with the requirement. Moreover, lenders that attempt to cooperate with VA may have difficulty in doing so because different regional offices establish different requirements. Creation of more uniform requirements will decrease the possibility of erroneous title packages being submitted to VA and the likelihood of custody being returned to the holder as a result.

A uniform requirement will also result in more efficient processing of paperwork from lenders and a decrease in correspondence and phone calls to and from lenders to explain title requirements. It will also reduce losses which VA has incurred due to decreases in property values or vandalism damage during the period the Secretary is awaiting acceptable title evidence.

The proposed amendments will also provide for the holder to reimburse the Secretary for expenses incurred in connection with the property in the event the holder fails to deliver acceptable title evidence by the due date and the Secretary returns custody of the property to the holder.

Currently under the regulations the holder has the option of delivering to VA a property that is either vacant or occupied. In most cases when a property is delivered with an occupant, VA's efforts to market and resell it must be postponed until the property is vacated. In such cases VA is responsible for having the property vacated. The proposed amendments will require that a property be vacant when the holder delivers it unless otherwise directed by VA. They will also provide for VA to reimburse the holder for reasonable and customary charges incurred in obtaining possession.

Currently under 38 CFR 36.4320(h)(7) upon receipt of a holder's notice of election to convey a property, VA accepts custody of the property and thereby assumes the risk of loss associated with it. To covey the property to VA the holder must provide VA with a notice of election to convey no later than 15 days after the date of the sale. This is well before the date the holder normally submits acceptable title evidence to VA.

From the time VA accepts custody of the property until VA receives acceptable title evidence and can sell the property, VA is exposed to risk of loss due to vandalism damage, personal injury on the property, and a decline in property values. To decrease the possibility of such loss the proposed regulatory amendments will provide for the Secretary to set a date by which the holder must deliver acceptable title evidence to VA. The date set will be no earlier than 60 days from the date the holder either acquired the property or obtained possession of it, whichever is later.

The Secretary hereby certifies that these proposed regulatory amendments will not, if promulgated, have a significant economic impact on a substantial number of small entities as they are defined in the Regulatory

Flexibility Act, 5 U.S.C. 601–612. Few VA loans are held and serviced by small entities. The proposed requirement that the property ordinarily be vacant when conveyed to the Secretary is consistent with FHA practices and should have minimal economic effect on lenders; VA will reimburse to lenders their reasonable and customary costs incident to this requirement, and lenders are in the best position to take the necessary steps to minimize any delays in acquiring possession. The proposed 60-day period for lenders to provide evidence of title will not begin until the lender either acquires the property or takes possession, whichever is later. This 60-day period will ordinarily be more than sufficient time to provide the necessary evidence of clear title. Moreover, under the proposed regulation, VA has authority to extend that period in unusual cases, or cases where factors beyond the lender's control might require a longer period. Finally, the third proposed change simply authorizes the Secretary to specify the types of title documents required; however, only those types of documentation which are usual and customary in the industry will be required, and any additional reasonable and customary costs which a lender incurs as a result of this VA requirement will also be reimbursed to the lender.

The Secretary has also determined that the proposed regulatory amendments are not a "major rule" within the meaning of Executive Order 12291, Federal Regulation. They will not have an annual effect on the economy of $100 million or more, and will not cause a major increase in costs or prices of consumers or individual industries, nor will they have other significant adverse effects on competition, employment, investment, productivity, innovation, or on the ability of United States-based enterprises to compete with foreign-based enterprises in domestic or export markets.

Paperwork Reduction Act

Section 36.4320(h)(5)(ii) of these regulations contains an information collection requirement. The public reporting burden for this collection is estimated to average 4 hours per response for a total of 128,000 hours. This includes the time for reviewing instructions, searching existing data sources, gathering and maintaining the data needed, and completing and reviewing the collection of information.

As required by section 3504(h) of the Paperwork Reduction Act, the Department of Veterans Affairs is submitting to the Office of Management and Budget (OMB) a request that it approve this information collection requirement. Organizations and individuals desiring to submit comments for consideration by OMB on this proposed information collection requirement should address them to the Office of Information and Regulatory Affairs, OMB, room 3002, New Executive Office Building, Washington, DC 20503, Attention: Joseph F. Lackey.

The Catalog of Federal Domestic Assistance Program numbers are 64.114 and 64.118.

These amendments are proposed under the Authority granted the Secretary by sections 210(c) and 1820 of title 38, United States Code.

List of Subjects in 38 CFR Part 36

Condominium, Handicapped, Housing loan programs—housing and community development, Manufactured homes, Veterans.

Approved: April 3, 1990.

Edward J. Derwinski,

Secretary of Veterans Affairs.

38 CFR Part 36, Loan Guaranty, is amended as follows:

PART 36—[AMENDED]

In § 36.4320, paragraphs (a)(1)(ii)(A), (f)(5), (h)(5)(ii), and (h)(7) are revised and (h)(11) and (h)(12) are added to read as follows:

§ 36.4320 Sale of security.

(a) * * *

(i) * * *

(ii) * * *

(A) The holder acquires the property, or the rights to the property, at the sale for an amount not in excess of such specified amount, the holder shall credit to the indebtedness the amount specified. The holder then may retain the property or, not later than 15 days after the date of sale, notify the Secretary of the holder's election to convey or transfer the property, or the rights to the property, to the Secretary, and whether the property is vacant or occupied at the time of the notice. Property which the holder elects to convey pursuant to this paragraph shall be conveyed vacant unless the property is occupied by someone properly in possession by virtue of and during a period of redemption or the holder is otherwise directed by the Secretary. The transfer of custody and title to the property conveyed pursuant to this paragraph shall be governed by the provisions of paragraph (h) of this section.

(Authority: 38 U.S.C. 1820(a))

* * * * *

(f) * * *

(5) Reasonable and necessary costs of acquiring possession of the property, if such action is required to convey the property to the Secretary pursuant to paragraph (a)(ii)(A) of this section.

(Authority: 38 U.S.C. 1820(a))

* * * * *

(h) * * *

(5) * * *

(ii) With respect to any such limitations which came into existence subsequent to the making of the loan, full compliance was had with the requirements of § 36.4324 of this part. The acceptability of a conveyance or transfer pursuant to the requirements of this paragraph will be established by delivery to the Secretary of such evidence of title as the Secretary may require, in form satisfactory to him/her, showing that title to the property of the quality specified in this paragraph is or will be vested in the Secretary. Such evidence may include, but is not limited to, any of the following title documentation:

(A) A title policy insuring the Secretary in an amount approximately equal to the consideration for the property, or a commitment for same;

(B) A mortgagee's policy of title insurance accompanied by an abstract and an attorney's certificate of title covering the period subsequent to the date of the mortgage;

(C) An abstract of title accompanied by a legal opinion as to the quality of such title of record;

(D) A Torrens or similar title certificate;

(E) Such other evidence of title as the Secretary may require or approve.

Evidence of title shall be executed as of a date to include the recordation of the deed to the Secretary. The title evidence shall show that according to the public records, there are not, at such date, any outstanding prior liens, including any past-due and unpaid ground rents, general taxes or special assessments.

(Authority: 38 U.S.C. 1820(a))

* * * * *

(7) As between the holder and the Secretary, the responsibility for any loss due to damage to or destruction of the property or due to personal injury sustained in respect to such property shall be governed by the provisions of this paragraph and paragraph (h)(10) of this section. Ordinary wear and tear excepted, the holder shall bear such risk of loss from the date of acquisition by the holder to the date such risk of loss is assumed by the Secretary. Such risk of

loss will be assumed by the Secretary subject to the following:

(i) If the property is vacant, occupied by someone properly in possession pursuant to paragraph (h)(3) of this section, or otherwise occupied pursuant to the direction or approval of the Secretary, the Secretary shall assume custody of the property from the date of receipt of the holder's notice of election to convey or transfer the property to the Secretary or, in the event notice of such election is received prior to acquisition, from the date of the Secretary's receipt of notice of acquisition by the holder.

(ii) If the property is occupied at the time of the holder's notice of election to convey, and such occupancy is not permitted or authorized under the provisions of paragraph (h)(7)(i), the Secretary's assumption of risk of loss will be deferred until such time as the holder has obtained possession of the property and notified the Secretary that the property is vacant. The Secretary shall assume custody of the property from the date of receipt of the holder's notice of vacancy.

(iii) If custody over the property has not been delivered by the holder to the Secretary on the date when the Secretary otherwise would have assumed the risk of loss, the Secretary's assumption of the risk of loss will be deferred until such custody over the property is delivered, or until the property has been conveyed or transferred to the Secretary.

The amount of any loss chargeable to the holder may be deducted from the amount payable by the Secretary at the time the property is transferred. In any case where, pursuant to VA regulations rejection of title is legally proper or warranted because of the holder's failure to deliver required title evidence to the Secretary within a reasonable time, the Secretary may surrender custody of the property as of the date specified in the Secretary's notice to the holder. The Secretary's assumption of risk of loss with respect to the property shall terminate upon such surrender.

(Authority: 38 U.S.C. 1820(a))

* * * * *

(11) The Secretary may fix a date, no earlier than 60 days from the date the holder acquired the property or obtained possession of the property, whichever is later, by which title evidence required under paragraph (h)(5)(ii) must be delivered. If the holder fails to deliver such title evidence by the date, the Secretary may approve an extension for a reasonable time to permit the holder to comply, or in the alternative, elect to surrender custody of the property and reconvey title to the holder. After giving notice of such election to the holder the Secretary shall have no further obligation to accept transfer of the property pursuant to this paragraph.

(12) In the event the Secretary surrenders custody to the holder because of the holder's failure to deliver required evidence of title by the date fixed under paragraph (h)(11), the holder shall reimburse the Secretary for all expenses incurred in connection with the property. This reimbursement shall include all expenditures made from the date custody of the property was assumed by the Secretary to the date such custody was surrendered to the holder after appropriate adjustment on account of any income received from the property.

(Authority: 38 U.S.C. 1820(a))

* * * * *

[FR Doc. 90-18232 Filed 8-3-90; 8:45 am]
BILLING CODE 8320-01-M

ENVIRONMENTAL PROTECTION AGENCY

40 CFR Part 261

[SW-FRL-3817-4]

Hazardous Waste Management System; Identification and Listing of Hazardous Waste; Proposed Exclusion

AGENCY: Environmental Protection Agency.

ACTION: Proposed rule and request for comment.

SUMMARY: The Environmental Protection Agency (EPA or Agency) today is proposing to grant a petition submitted by Kawneer Company, Incorporated, Springdale, Arkansas, to exclude certain solid wastes generated at its facility from the lists of hazardous wastes contained in 40 CFR 261.31 and 261.32. This action responds to a delisting petition submitted under 40 CFR 260.20, which allows any person to petition the Administrator to modify or revoke any provision of parts 260 through 268, 124, 270, and 271 of title 40 of the Code of Federal Regulations, and under 40 CFR 260.22, which specifically provides generators the opportunity to petition the Administrator to exclude a waste on a "generator-specific" basis from the hazardous waste lists. Today's proposed decision is based on an evaluation of waste-specific information provided by the petitioner.

The Agency is also proposing the use of an organic leachate model and a fate and transport model and their application in evaluating the waste-specific information provided by the petitioner. These models have been used in evaluating the petition to predict the concentration of hazardous constituents released from the petitioned waste, once it is disposed of.

DATES: EPA is requesting public comments on today's proposed decision and on the applicability of the organic leachate and fate and transport models used to evaluate the petition. Comments will be accepted until September 20, 1990. Comments postmarked after the close of the comment period will be stamped "late".

Any person may request a hearing on this proposed decision and/or the models used in the petition evaluation by filing a request with the Director of the Permits and State Programs Division, Office of Solid Waste, whose address appears below, by August 21, 1990. The request must contain the information prescribed in 40 CFR 260.20(d).

ADDRESSES: Send three copies of your comments to EPA. Two copies should be sent to the Docket Clerk, Office of Solid Waste (OS-305), U.S. Environmental Protection Agency, 401 M Street SW., Washington, DC 20460. A third copy should be sent to Jim Kent, Variances Section, Assistance Branch, PSPD/OSW (OS-343), U.S. Environmental Protection Agency, 401 M Street SW., Washington, DC 20460. Identify your comments at the top with this regulatory docket number: "F-90-KWEP-FFFFF".

Requests for a hearing should be addressed to Director, Permits and State Programs Division, Office of Solid Waste (OS-340), U.S. Environmental Protection Agency, 401 M Street SW., Washington, DC 20460.

The RCRA regulatory docket for this proposed rule is located at the U.S. Environmental Protection Agency, 401 M. Street, SW. (room M2427), Washington, DC 20460, and is available for viewing from 9 a.m. to 4 p.m., Monday through Friday, excluding Federal holidays. Call (202) 475-9327 for appointments. The public may copy material from any regulatory docket at a cost of $0.15 per page.

FOR FURTHER INFORMATION CONTACT: For general information, contact the RCRA Hotline, toll free at (800)424-9346, or at (202) 382-3000. For technical information concerning this notice, contact Chichang Chen, Office of Solid Waste (OS-343), U.S. Environmental Protection Agency, 401 M Street SW., Washington, DC 20460, (202) 382-4782.

SUPPLEMENTARY INFORMATION:

I. Background

A. Authority

On January 16, 1981, as part of its final and interim final regulations implementing section 3001 of RCRA, EPA published an amended list of hazardous wastes from non-specific and specific sources. This list has been amended several times, and is published in 40 CFR 261.31 and 261.32. These wastes are listed as hazardous because they typically and frequently exhibit one or more of the characteristics of hazardous wastes identified in subpart C of part 261 (*i.e.*, ignitability, corrosivity, reactivity, and extraction procedure (EP) toxicity) or meet the criteria for listing contained in 40 CFR 261.11(a)(2) or (a)(3).

Individual waste streams may vary, however, depending on raw materials, industrial processes, and other factors. Thus, while a waste that is described in these regulations generally is hazardous, a specific waste from an individual facility meeting the listing description may not be. For this reason, 40 CFR 260.20 and 260.22 provide an exclusion procedure, allowing persons to demonstrate that a specific waste from a particular generating facility should not be regulated as a hazardous waste.

To have their wastes excluded, petitioners must show that wastes generated at their facilities do not meet any of the criteria for which the wastes were listed. See 40 CFR 260.22(a) and the background documents for the listed wastes. In addition, the Hazardous and Solid Waste Amendments (HSWA) of 1984 require the Agency to consider any factors (including additional constituents) other than those for which the waste was listed, if there is a reasonable basis to believe that such additional factors could cause the waste to be hazardous. Accordingly, a petitioner also msut demonstrate that the waste does not exhibit any of the hazardous waste characteristic (*i.e.*, ignitability, reactivity, corrosivity, and EP toxicity), and must present sufficient information for the Agency to determine whether the waste contains any other toxicants at hazardous levels. See 40 CFR 260.22(a), 42 U.S.C. 6921(f), and the background documents for the listed wastes. Although wastes which are "delisted" (*i.e.*, excluded) have been evaluated to determine whether or not they exhibit any of the characteristics of hazardous waste, generators remain obligated under RCRA to determine whether or not their waste remains non-hazardous based on the hazardous waste characteristics.

In addition to wastes listed as hazardous in 40 CFR 261.31 and 261.32, residues from the treatment, storage, or disposal of listed hazardous wastes and mixtures containing hazardous wastes are also considered hazardous wastes. Such wastes are also eligible for exclusion and remain hazardous wastes until excluded. See 40 CFR 261.3(c) and (d)(2). The substantive standards for "delisting" a treatment residue or a mixture are the same as previously described for listed wastes.

B. Approach Used To Evaluate This Petition

This petition requests a delisting for a listed hazardous waste. In making the initial delisting determination, the Agency evaluated the petitioned waste against the listing criteria and factors cited in 40 CFR 261.11(a)(2) and (a)(3). Based on this review, the Agency agrees with the petitioner that the waste is non-hazardous with respect to the original listing criteria. (If the Agrency had found, based on this review, that the waste remained hazardous based on the factors for which the waste was originally listed, EPA would have proposed to deny the petition.) EPA then evaluated the waste with respect to other factors or criteria to assess whether there is a reasonable basis to believe that such additional factors could cause the waste to be hazardous. The Agency considered whether the waste is acutely toxic, and considered the toxicity of the constituents, the concentration of the constituents in the waste, their tendency to migrate and to bioaccumulate, their persistence in the environment once release from the waste, plausible and specific types of management of the petitioned waste, and the quantities of waste generated.

For this delisting demonstration, the Agency used such information to identify plausible exposure routes for hazardous constituents present in the waste, and is proposing the use of an organic leachate model and a fate and transport model to predict the concentration of hazardous constituents that may be released from the petitioned waste after disposal and to determine the potential impact of the unregulated disposal of Kawneer's petitioned waste on human health and the environment. Specifically, the models were used to predict compliance-point concentrations which were then compared directly to the levels of regulatory concern for particular hazardous constituents.

EPA believes that this fate and transport model represents a reasonable worst-case waste disposal scenario for the petitioned waste, and that a reasonable worst-case scenario is appropriate when evaluating whether a waste should be relieved of the protective management constraints of RCRA subtitle C. Because a delisted waste is no longer subject to hazardous waste control, the Agency is generally unable to predict and does not control how a waste will be managed after delisting. Therefore, EPA currently believes that it is inappropriate to consider extensive site-specific factors when applying the fate and transport model. For example, a generator may petition the Agency for delisting of a metal hydroxide sludge which is currently being managed in an on-site landfill and provide data on the nearest drinking water well, permeability of the aquifer, dispersivities, etc. If the Agency were to base its evaluation solely on these site-specific factors, the Agency might conclude that the waste, at that specific location, cannot affect the closest well, and the Agency might grant the petition. Upon promulgation of the exclusion, however, the generator is under no obligation to continue to manage the waste at the on-site landfill. In fact, it is likely that the generator will either choose to send the delisted waste off site immediately, or will eventually reach the capacity of the on-site facility and subsequently send the waste off site to a facility which may have very different hydrogeological and exposure conditions.

The Agency also considers the applicability of ground-water monitoring data during the evaluation of delisting petitions. In this case, the Agency determined that it would be inappropriate to request ground-water monitoring data because Kawneer sends the petitioned waste off site for disposal. For petitioners using off-site management, the Agency believes that, in most cases, the ground-water monitoring data collected would not be meaningful. Most commercial land disposal facilities accept wastes from numerous generators. Any ground-water contamination or leachate would be characteristic of the total volume of waste disposed of at the site. In most cases, the Agency believes that it would be impossible to isolate ground-water impacts associated with any one waste disposed of in a commercial landfill. Therefore, the Agency did not request ground-water monitoring data from Kawneer. EPA recently proposed a rule clarifying the Agency's use of ground-water data in delisting decisions (see 54 FR 41930, October 12, 1989).

Finally, the Hazardous and Solid Waste Amendments of 1984 specifically require the Agency to provide notice and an opportunity for comment before granting or denying a final exclusion. Thus, a final decision will not be made

until all public comments (including those at a public hearing, if any) on today's proposal are addressed.

II. Disposition of Delisting Petition

Kawneer Company, Incorporated, Springdale, Arkansas

1. Petition for Exclusion

Kawneer Company, Incorporated (Kawneer), located in Springdale, Arkansas, is an aluminum extrusion plant where architectural aluminum shapes are manufactured for use in the construction industry. Kawneer is a subsidiary of Alumax, Incorporated. Kawneer petitioned the Agency to exclude its wastewater treatment filter press sludge, presently listed as EPA Hazardous Waste No. F019—"Wastewater treatment sludges from the chemical conversion coating of aluminum". The listed constituents for EPA Hazardous Waste No. F019 waste are hexavalent chromium and cyanide (complexed) (see 40 CFR part 261, appendix VII).

Kawneer petitioned to exclude its waste because it does not believe that the waste meets the criteria of the listing. Kawneer also believes that its treatment process generates a non-hazardous waste because the constituents of concern, although present in the waste, are in an essentially immobile form. Kawneer further believes that the waste is not hazardous for any other reason (*i.e.*, there are no additional constituents or factors that could cause the waste to be hazardous). Review of this petition included consideration of the original listing criteria, as well as the additional factors required by the Hazardous and Solid Waste Amendments (HSWA) of 1984. See section 222 of HSWA, 42 U.S.C. 6921(f), and 40 CFR 260.22(d)(2)–(4). Today's proposal to grant this petition for delisting is the result of the Agency's evaluation of Kawneer's petition.

2. Background

Kawneer petitioned the Agency to exclude its wastewater treatment filter press sludge on July 8, 1986, and subsequently provided additional information to complete its petition. In support of its petition, Kawneer submitted (1) detailed descriptions of its manufacturing and wastewater treatment processes; (2) a list of all raw materials used in both the manufacturing and treatment processes; (3) total constituent and EP toxicity analysis data for the EP toxic metals, nickel, and cyanide for representative samples of the petitioned waste; (4) total constituent analysis data for total sulfide for representative samples of the petitioned waste; (5) total oil and grease analysis data for representative samples of the petitioned waste; (6) total constituent analysis data for hazardous organic compounds (*i.e.*, those listed in 40 CFR part 261, appendix VIII) potentially present in the petitioned waste; and (7) results from characteristics testing for ignitability, corrosivity, and reactivity.

Kawneer manufactures architectural aluminum extrusions for use in the construction industry. Some of these extruded shapes are painted to customer specifications. Prior to painting, the aluminum surface is cleaned and prepared by passage through five successive tanks. The aluminum is first passed through a tank containing a sodium hydroxide mixture, and rinsed in a second tank containing water. The aluminum is then passed through a third tank (the "chrome conversion" tank) containing phosphoric, hydrofluoric, and chromic acids, and rinsed in the final two tanks with water.

Prior to mid-1986, the wastewater from the second and final two tanks was sent to a holding/equalization pit and then to Kawneer's treatment facility (DMP System). In mid-1986, Kawneer began discharging the wastewater from the second tank to a separate treatment system. Currently, the rinse waters from the final two tanks are the only streams that enter the DMP System.

The DMP System consists of a series of tanks through which the wastewater is pumped. The first tank contains sulfuric acid, to adjust the pH of the wastewater, and sodium metabisulfite, to reduce hexavalent chromium to trivalent chromium. In the next tank, the wastewater is neutralized with sodium hydroxide and magnesium hydroxide, and then pumped to a third tank where a polymer is added to promote flocculation and precipitation of the metal hydroxides. The treated wastewater is then sent through a gravity clarifier, where thickened sludge is removed and subsequently dewatered by a filter press to 25–30 percent solids. The effluent from the clarifier is discharged to a publicly-owned treatment works (POTW). The filter press is opened one to two times daily and the accumulated sludge drops into a 55-gallon drum. At the maximum generation rate of 26 tons per year, a 55-gallon drum is filled every four days. Filled drums are stored on-site for less than 90 days and are currently disposed of in a RCRA permitted hazardous waste landfill. The supernatant from the filter press is returned to the holding/equalization pit.

To collect representative samples from 55-gallon drums like Kawneer's, petitioners are normally requested to collect a minimum of four composite samples, each composed of a full-depth core sample collected from one or more of the 55-gallon drums containing sludge generated over a specific time period (*e.g.*, collect a full-depth core sample from each drum generated during a week and composite the samples weekly). See "Test Methods for Evaluating Solid Wastes: Physical/Chemical Methods," U.S. EPA, Office of Solid Waste and Emergency Response, Publication SW–846 (third edition), November 1986, and "Petitions to Delist Hazardous Wastes—A Guidance Manual," U.S. EPA, Office of Solid Waste (EPA/530–SW–85–003), April 1985.

Kawneer, in its initial demonstration, collected one grab sample each from four 55-gallon drums during a two-week period in November 1985. However, because process changes occurred in mid-1986, the Agency did not consider data from these samples as representative of the currently generated waste and, thus, requested additional data. Kawneer collected three additional grab samples between May 1987 and July 1987, four grab samples between October 1987 and January 1988, and two grab samples between January 1990 and March 1990. All nine grab samples were collected by reaching into the center of the sludge mass of each drum and retrieving a sample. Kawneer claims that these samples are representative for the following reasons:

(1) The rinse waters, which are the only waste influent to the DMP System, do not exhibit any significant variation;

(2) The holding pit allows ample time for equalization;

(3) The chemistry of the DMP System provides that the sludge will not vary over time, and;

(4) The grab samples collected from the drums represent filter press sludge generated over a sufficiently long period of time to account for any daily variation in the waste.

Although Kawneer did not randomly collect composite samples according to the full-depth core method, the Agency believes that Kawneer's grab sampling methods characterize constituent concentrations in the sludge because the DMP System generates a well mixed, homogeneous filter press sludge, and because the samples were collected over a sufficiently long period of time to show any process variations.

One of the three grab samples collected between May 1987 and July 1987 was analyzed for the extraction

procedure (EP) leachate concentrations (*i.e.*, mass of a particular constituent per unit volume of extract) of the EP toxic metals. The other two grab samples collected in this period were analyzed for EP leachate concentrations of chromium and cyanide. The four samples collected between October 1987 and January 1988 were analyzed for total constituent concentrations (*i.e.*, mass of a particular constituent per mass of waste) and EP leachate concentrations of the EP toxic metals and nickel. (One of these four samples was not analyzed for leachable concentrations of arsenic and barium.) The four samples collected between October 1987 and January 1988 also were analyzed for total constituent concentrations of cyanide and sulfide, total oil and grease content, and selected hazardous organic constituents. The two grab samples collected between January 1990 and March 1990 were analyzed for total constituent concentrations of hexavalent chromium.

3. Agency Analysis

Kawneer used test procedures from "Standard Methods for the Examination of Water and Wastewater" to quantify the total constituent concentrations and EP leachate concentrations of the EP toxic metals, nickel, and cyanide and the total constituent concentraions of sulfide and hexavalent chromium in the filter press sludge.

Maximum reported total constituent and EP leachate concentrations of the EP toxic metals, nickel, cyanide, and sulfide are presented in Table 1. (Analysis for EP leachate concentrations of sulfide is not necessary because the Agency's level of regulatory concern is based on the total constituent concentration of reactive sulfide.)

TABLE 1—MAXIMUM TOTAL CONSTITUENT AND EP LEACHATE CONCENTRATIONS (PPM) FILTER PRESS SLUDGE

Constituents	Total constituent concentrations	EP leachate concentrations
Arsenic	0.01	<0.01
Barium	0.98	0.26
Cadmium	10.418	0.042
Chromium	88,318	0.60
Chromium (hexavalent)	<0.05	
Lead	52.108	0.22
Mercury	<0.01	<0.01
Selenium	<0.01	<0.01
Silver	7.648	0.01
Nickel	71.26	0.292
Cyanide	0.55	<5.0
Sulfide	0.016	

< Denotes that the constituent was not detected at the detection limit shown in the table.

The detection limits in Table 1 (except for leachable cyanide) represent the lowest concentrations quantifiable by Kawneer, when using the appropriate analytical methods to analyze its waste. (Detection limits may vary according to the waste and waste matrix being analyzed, *i.e.*, the "cleanliness" of waste matrices varies and "dirty" waste matrices may cause interferences, thus raising the detection limits.) The Agency did not request Kawneer to re-analyze samples of the petitioned waste for leachable cyanide using a lower detection limit because total cyanide levels in the waste are sufficiently low to indicate that leachable cyanide levels in the waste will not be of concern. See section 4 of today's notice for more detail.

Using "Standard Methods for the Examination of Water and Wastewater" Method 503, Kawneer determined that its filter press sludge had a maximum oil and grease content of 0.0007 percent; therefore, the EP analyses did not have to be modified in accordance with the Oily Waste EP methodology (*i.e.*, wastes having more than one percent total oil and grease may either have significant concentrations of constituents of concern in the oil phase, which may not be assessed using the standard EP leachate procedure, or the concentration of oil and grease may be sufficient to coat the solid phase of the sample and interfere with the leaching of metals from the sample). See SW–846 Method 1330. Kawneer provided test data indicating that the filter press sludge is not ignitable below 212°F. Based on analytical results provided by the petitioner, pursuant to 40 CFR 260.22, the filter press sludge also was determined not to be corrosive or reactive. See 40 CFR 261.21, 261.22, and 261.23, respectively.

Kawneer used "Standard Methods for the Examination of Water and Wasterwater" Methods 624 and 625 to analyze four representative samples of the petitioned waste for purgeable compounds, and base/neutral and acid extractables, respectively. SW–846 Method 8080 was used to quantify levels of organochlorine pesticides and polychlorinated biphenyls (PCBS) in the petitioned waste. Kawneer submitted these analyses to show that no other constitutents of concern were present in the waste. Table 2 presents the maximum total constituent concentrations of the hazardous organic constituents detected in Kawneer's filter press sludge.

TABLE 2—MAXIMUM TOTAL CONSTITUENT CONCENTRATIONS (PPM) FILTER PRESS SLUDGE

Constituents	Total constituent concentrations
Bis (2-ethylhexyl)phthalate	0.30
Dibutyl phtalate	0.04
Ethyl benzene	0.01
Toluene	0.03

Kawneer submitted a signed certification stating that, based on current annual waste generation, their maximum annual generation rate of wastewater treatment filter press sludge is 26 tons (approximately 26 cubic yards). The Agency reviews a petitioner's estimates and, on occasion, has requested a petitioner to re-evaluate estimated waste volume. EPA accepts Kawneer's certified estimate of 26 cubic yards.

EPA does not generally verify submitted test data before proposing delisting decisions, and has not verified the data upon which it proposes to grant Kawneer's exclusion. The sworn affidavit submitted with this petition binds the petitioner to present truthful and accurate results. The Agency, however, has initiated a spot-check sampling and analysis program to verify the representative nature of the data for some percentage of the submitted petitions, and may select facilities likely to be proposed for exclusion for spot-check sampling.

4. Agency Evaluation

The Agency considered the appropriateness of alternative disposal scenarios for filter press sludges and decided that disposal in a landfill is the most reasonable, worst-case scenario for this waste. Under a landfill disposal scenario, the major exposure route of concern for any hazardous constituents would be ingestion of contaminated ground water. The Agency, therefore, evaluated the petitioned waste using its vertical and horizontal spread (VHS) landfill model which predicts the potential for ground-water contamination from wastes that are landfilled. See 50 FR 7882 (February 26, 1985), 50 FR 48896 (November 27, 1985), and the RCRA public docket for these notices for a detailed description of the VHS model and its parameters. This modeling approach, which includes a ground-water transport scenario, was used with conservative, generic parameters to predict reasonable worst-case contaminant levels in ground water at a hypothetical receptor well or

compliance point (*i.e.*, the model estimates the dilution of a toxicant within the aquifer for a specific volume of waste).

In addition, the Agency used its Organic Leachate Model (OLM) to estimate the leachable portion of the organic constituents in the petitioned waste. See 50 FR 48953 (November 27, 1985), 51 FR 41084 (November 13, 1986), and the RCRA public docket for these notices for a detailed description of the OLM and its parameters. The results of the OLM analysis were used in conjunction with the VHS model to estimate the potential impact of the organic constituents on the underlying aquifer. The Agency requests comments on the use of the OLM and VHS model as applied to the evaluation of Kawneer's waste.

Specifically, the Agency used the VHS model to evaluate the mobility of the hazardous inorganic constituents detected in the EP extract of Kawneer's filter press sludge. The Agency's evaluation, using Kawneer's estimate of 26 cubic yards per year and the maximum reported EP leachate concentrations, generated the compliance-point concentrations shown in Table 3. The Agency did not evaluate the mobility of arsenic, mercury, selenium, and cyanide from Kawneer's waste because they were not detected in the EP extract using the appropriate analytical test methods (see Table 1). The Agency believes that it is inappropriate to evaluate non-detectable concentrations of a constituent of concern in its modeling efforts if the non-detectable value was obtained using the appropriate analytical method. Specifically, if a constituent cannot be detected (when using the appropriate analytical method), the Agency assumes that the constituent is not present and therefore does not present a threat to either human health or the environment.

TABLE 3.—VHS MODEL: COMPLIANCE-POINT CONCENTRATIONS (PPM) FILTER PRESS SLUDGE

Constituents	Compliance-point concentrations	Levels of regulatory concern[1]
Barium	0.008	1.0
Cadmium	0.0013	0.01
Chromium	0.0185	0.05
Lead	0.0068	0.05
Silver	0.0003	0.05
Nickel	0.009	0.7

[1] See "Docket Report on Health-based Regulatory Levels and Solubilities Used in the Evaluation of Delisting Petitions," April 1990, located in the RCRA public docket.

The filter press sludge exhibited barium, cadmium, chromium, lead, silver, and nickel levels at the compliance point below the health-based levels used in delisting decision-making.

As reported in Table 1, total constituent analyses for hexavalent chromium indicated that hexavalent chromium was not present in any of the analyzed samples (at a detection limit of 0.05 ppm). The chromium in Kawneer's waste, therefore, is at least 99.99 percent trivalent chromium. Trivalent chromium, which is a natural constituent in the earth's crust and is an essential human nutrient, is considered to be much less toxic than hexavalent chromium (see 53 FR 10206, March 29, 1988).

The Agency also evaluated further whether chromium levels in the petitioned waste were of concern. The Agency's review of Kawneer's description of its chrome reduction system indicated that the system is established to effectively control the reduction of hexavalent chromium. The chrome reduction system relies on a three-step process: Adjustment of the pH of the waste to 2.0–2.5 with sulfuric acid, conversion of hexavalent chromium to trivalent chromium with sodium bisulfite, and precipitation of metal hydroxides. This three-step process is monitored using pH and oxidation reduction potential (ORP) probes which control the introduction of treatment chemicals and activate process flow pumps, chemical pumps, and alarms. The pH probes are pre-set to activate timers (which are set to correspond with vat retention times) that both shut down process flows if pH levels are not maintained and trigger alarms. The ORP probe controls reduction through continuous monitoring of the reduction vat and also controls the addition of sodium metabisulfite. Similar to the pH probe, the ORP probe is connected to timers and alarms so that the process shuts down if chemical additions do not occur as needed. In addition, Kawneer's treatment system is isolated from other waste streams, thus minimizing interference, and is run to allow ample time and capacity for treatment to occur. For these reasons, the Agency believes that Kawneer's treatment system is capable of controlling the reduction of hexavalent chromium. The Agency, therefore, does not believe that total levels of chromium in Kawneer's petitioned waste present a hazard to either human health or the environment.

Further, because Kawneer only analyzed two representative samples of the filter press sludge for leachable cyanide and because the Agency believes that Kawneer could achieve lower detection limits for its cyanide analyses if requested to do so, the Agency also reviewed the total concentrations of cyanide reported for the petitioned waste. This review indicated that the maximum reported level of cyanide in the petitioned waste of 0.55 ppm was below the Agency's level of regulatory concern for cyanide (*i.e.*, 0.7 ppm). See "Docket Report on Health-based Regulatory Levels and Solubilities Used in the Evaluation of Delisting Petitions," April 1990, located in the RCRA public docket. Thus, the Agency believes that leachable concentrations of cyanide in the petitioned waste are not of concern.

As reported in Table 1, the maximum concentration of total cyanide in Kawneer's waste is 0.55 ppm. Because reactive cyanide is a specific subcategory of the general class of cyanide compounds, the maximum level of reactive cyanide in the petitioned waste also will not exceed 0.55 ppm. Thus, the Agency concludes that the concentration of reacative cyanide will be below the Agency's interim standard of 250 ppm. See "Interim Agency Thresholds for Toxic Gas Generation," July 12, 1985, Internal Agency Memorandum in the RCRA public docket. Lastly, because the maximum reported total constituent concentration of sulfide in the waste is 0.016 ppm, the concentration of reactive sulfide will be below the Agency's interim standard of 500 ppm. See "Interim Agency Thresholds for Toxic Gas Generation," July 12, 1985, Internal Agency Memorandum in the RCRA public docket.

The Agency also evaluated the mobility of the hazardous organic constituents detected in Kawneer's waste unsing the VHS model. The Agency used the OLM to predict the leachable concentration of each of the four constituents (*i.e.*, bis(2-ethylhexyl)phthalate, dibutyl phthalate, ethyl benzene, and toluene) detected in the filter press sludge. The resulting leachable concentrations then were used as inputs in the VHS model in order to assess the potential impact of the constituents upon the ground water. The calculated compliance-point concentrations for the four detected constituents are presented in Table 4. The Agency did not evaluate the mobility of the remaining organic constituents from Kawneer's filter press sludge because they were not detected

in the waste using appropriate analytical methods. As stated previously, the Agency will not evaluate non-detectable concentrations of a constituent of concrern in its modeling efforts if the non-detectable value was obtained using the appropriate analytical method.

TABLE 4—OLM/VHS MODEL: Compliance-Point Concentrations (ppm) Filter Press Sludge

Constituents	compliance-point concentrations	Levels of regulatory concern[1]
Bis(2-ethylhexyl)phthalate	0.00002	0.003
Dibutyl phthalate	0.00002	4
Ethyl benzene	0.00002	0.7
Toluene	0.00006	2

[1] See "Docket Report on Health-based Regulatory Levels and Solubilities Used in the Evaluation of Delisting Petitions," April 1990, located in the RCRA public docket.

The filter press sludge exhibited bis(2-ethylhexyl)-phthalate, dibutyl phthalate, ethyl benzene, and toluene levels at the compliance point well below the health-based levels used in delisting decision-making. The Agency concluded after reviewing Kawneer's processes and raw materials list that no other hazardous constituents of concern, other than those tested for, are being used by Kawneer and that no other constituents of concern are likely to be present or formed as reaction products or by-products in Kawneer's waste. On the basis of test results submitted by the petitioner pursuant to 40 CFR 260.22, the Agency concludes that Kawneer's waste does not exhibit the characteristics of ignitability, corrosivity, or reactivity. See 40 CFR 261.21, 261.22, and 261.23, respectively.

5. Conclusion

The Agency believes that Kawneer has successfully demonstrated that its filter press sludge is not hazardous. Kawneer's manufacturing and waste treatment processes are believed to be uniform and consistent because the facility does not perform as a job shop or have seasonal product variations. Furthermore, the Agency believes that the samples of the petitioned waste analyzed reflect the day-to-day variations in manufacturing and treatment processes intended to be used thereafter. The Agency, therefore, is proposing that Kawneer's waste be considered non-hazardous, as it should not present a hazard to either human health or the environment. The Agency proposes to grant an exclusion to Kawneer Company, Incorporated, located in Springdale, Arkansas for its wastewater treatment filter press sludge described in its petition as EPA Hazardous Waste No. F019. If the proposed rule becomes effective, the wastewater treatment filter press sludge would no longer be subject to regulation under 40 CFR parts 262 through 268 and the permitting standards of 40 CFR part 270.

If made final, the exclusion will apply only to the processes coverdd by the demonstration for the 26 annual cubic yards of filter press sludge generated after the mid-1986 process changes. The facility would require a new exclusion if either its manufacturing or treatment processes are significantly altered such that a change in waste composition or increase in waste volume occurred. Accordingly, the facility would need to file a new petition for the altererd waste. The facility must treat waste generated from changed processes as hazardous until a new exclusion is granted.

Although managment of the waste covered by this petition would be relieved from subtitle C jurisdiction upon final promulgation of an exclusion, the generator of a delisted waste must either treat, store, or dispose of the waste in an on-site facility, or ensure that the waste is delivered to an off-site storage, treatment, or disposal facility, either of which is permitted, licensed, or registered by a State to manage municipal or industrial solid waste. Alternatively, the delisted waste may be delivered to a facility that beneficially uses or reuses, or legitimately recycles or reclaims the waste, or treats the waste prior to such beneficial use, reuse, recycling, or reclamation.

III. Effective Date

This rule, if finally promulgated, will become effective immediately upon such final promulgation. The Hazardous and Solid Waste Amendments of 1984 amended section 3010 of RCRA to allow rules to become effective in less than six months when the regulated community does not need the six-month period to come into compliance. That is the case here, because this rule, if finalized, would reduce the existing requirements for persons generating hazardous wastes. In light of the unnecessary hardship and expense that would be imposed on this petitioner by an effective date six months after promulgation and the fact that a six-month deadline is not necessary to achieve the purpose of section 3010, EPA believes that this exclusion should be effective immediately upon final promulgation. These reasons also provide a basis for making this rule effective immediately, upon promulgation, under the Administrative Procedures Act, pursuant to 5 U.S.C. 553(d).

IV. Regulatory Impact

Under Executive Order 12291, EPA must judge whether a regulation is "major" and therefore subject to the requirement of a Regulatory Impact Analysis. This proposal to grant an exclusion is not major, since its effect, if promulgated, would be to reduce the overall costs and economic impact of EPA's hazardous waste management regulations. This reduction would be achieved by excluding waste generated at a specific facility from EPA's list of hazardous wastes, thereby enabling this facility to treat its waste as non-hazardous. There is no additional impact, therefore, due to today's rule. This proposal is not a major regulation; therefore, no Regulatory Impact Analysis is required.

V. Regulatory Flexibility Act

Pursuant to the Regulatory Flexibility Act, 5 U.S.C. 601–612, whenever an agency is required to publish a general notice of rulemaking for any proposed or final rule, it must prepare and make available for public comment a regulatory flexibility analysis which describes the impact of the rule on small entities (*i.e.*, small businesses, small organizations, and small governmental jurisdictions). The Administrator or delegated representative may certify, however, that the rule will not have a significant economic impact on a substantial number of small entities.

This amendment, if promulgated, will not have an adverse economic impact on small entities since its effect would be to reduce the overall costs of EPA's hazardous waste regulations and would be limited to one facility. Accordingly, I hereby certify that this proposed regulation, if promulgated, will not have a significant economic impact on a substantial number of small entities. This regulation, therefore, does not require a regulatory flexibility analysis.

VI. Paperwork Reduction Act

Information collection and recordkeeping requirements associated with this proposed rule have been approved by the Office of Management and Budget (OMB) under the provisions of the Paperwork Reduction Act of 1980 (Pub. L. 96–511, 44 U.S.C. 3501 *et seq.*) and have been assigned OMB Control Number 2050–0053.

List of Subjects in 40 CFR Part 261

Hazardous waste, Recycling, and Reporting and recordkeeping requirements.

Dated: July 23, 1990.

Jeffery D. Denit,

Deputy Director, Office of Solid Waste.

For the reasons set out in the preamble, 40 CFR part 261 is proposed to be amended as follows:

PART 261—IDENTIFICATION AND LISTING OF HAZARDOUS WASTE

1. The authority citation for part 261 continues to read as follows:

Authority: 42 U.S.C. 6905, 6912(a), 6921, 6922, and 6938.

2. In Table 1 of appendix IX of part 261, add the following wastestream in alphabetical order by facility to read as follows:

Appendix IX—Wastes Excluded Under §§ 260.20 and 260.22

TABLE 1.—Wastes Excluded From Non-Specific Sources

Facility	Address	Waste description
* *	*	* *
Kawneer Company, Inc.	Springdale, Arkansas.	Wastewater treatment filter press sludge (EPA Hazardous Waste No. F019) generated (at a maximum annual rate of 26 cubic yards) from the chemical conversion coating of aluminum. This exclusion was published on [insert date of final rule's publication].
* *	*	* *

[FR Doc. 90–18304 Filed 8–3–90; 8:45 am]

BILLING CODE 6560–50–M

FEDERAL EMERGENCY MANAGEMENT AGENCY

44 CFR Part 67

[Docket No. FEMA–6996]

Proposed Flood Elevation Determinations; California, et al.

AGENCY: Federal Emergency Management Agency.

ACTION: Proposed rule.

SUMMARY: Technical information or comments are solicited on the proposed modified base (100-year) flood elevations listed below for selected locations in the nation. These base (100-year) flood elevations are the basis for the floodplain management measures that the community is required to either adopt or show evidence of being already in effect in order to qualify or remain qualified for participation in the National Flood Insurance Program.

DATES: The period of comment will be ninety (90) days following the second publication of the proposed rule in a newspaper of local circulation in each community.

ADDRESSES: See table below.

FOR FURTHER INFORMATION CONTACT: Mr. John L. Matticks, Chief, Risk Studies Division, Federal Insurance Administration, Federal Emergency Management Agency, Washington, DC 20472, (202) 646–2767.

SUPPLEMENTARY INFORMATION: The Federal Emergency Management Agency gives notice of the proposed determinations of modified base (100-year) flood elevations for selected locations in the nation, in accordance with section 110 of the Flood Disaster Protection Act of 1973 (Pub. L. 93–234), 87 Stat. 980, which added section 1363 to the National Flood Insurance Act of 1968 (Title XIII of the Housing and Urban Development Act of 1968 (Pub. L. 90–448)), 42 U.S.C. 4001–4128, and 44 CFR 67.4(a).

These elevations, together with the floodplain management measures required by § 60.3 of the program regulations, are the minimum that are required. They should not be construed to mean that the community must change any existing ordinances that are more stringent in their floodplain management requirements. The community may at any time enact stricter requirements on its own, or pursuant to policies established by other Federal, State, or regional entities. These proposed modified elevations will also be used to calculate the appropriate flood insurance premium rates for new buildings and their contents and for the second layers of insurance on existing buildings and their contents. Pursuant to the provisions of 5 U.S.C. 605(b), the Administrator, to whom authority has been delegated by the Director, Federal Emergency Management Agency, hereby certifies that the proposed modified flood elevation determinations, if promulgated, will not have a significant economic impact on a substantial number of small entities. A flood elevation determination under Section 1363 forms the basis for new local ordinances, which, if adopted by a local community, will govern future construction with the floodplain area. The local community voluntarily adopts floodplain ordinances in accord with these elevations. Even if ordinances are adopted in compliance with Federal standards, the elevations prescribe how high to build in the floodplain and do not proscribe development. Thus, this action only forms the basis for future local actions. It imposes no new requirement; or itself it has no economic impact.

List of Subjects in 44 CFR Part 67

Flood insurance, Floodplains.

1. The authority citation for part 67 continues to read as follows:

Authority: 42 U.S.C. 4001 et seq., Reorganization Plan No. 3 of 1978, E.O. 12127.

2. The proposed modified base flood elevations for selected locations are:

PROPOSED MODIFIED BASE FLOOD ELEVATIONS

State	City/town/county	Source of flooding	Location	#Depth in feet above ground. *Elevation in feet (NGVD).	
				Existing	Modified
California	City of Fairfield, Solano County.	Union Creek	Just downstream of Air Base Parkway Bridge	None	*58
			Just upstream of Air Base Parkway Bridge	None	*64

PROPOSED MODIFIED BASE FLOOD ELEVATIONS—Continued

State	City/town/county	Source of flooding	Location	#Depth in feet above ground. *Elevation in feet (NGVD).	
				Existing	Modified
		Laurel Creek	Approximately 150 feet downstream from Air Base Parkway.	*50	*50
			Just upstream from Air Base Parkway	*57	*55
			Approximately 700 feet upstream from Air Base Parkway.	*57	*56
			Approximately 1,650 feet upstream from Air Base Parkway.	*60	*59
			Just upstream from Cement Hill Road	*66	*64
			Approximately 200 feet upstream from Cement Hill Road.	*67	*67
			Just upstream from Gulf Drive	*69	*69
			Approximately 300 feet upstream from Gulf Drive.	*70	*70
			Approximately 1,950 feet upstream from Gulf Drive.	*84	*86
			Approximately 850 feet downstream from Dickson Hill Road.	*89	*93
			Just upstream from Dickson Hill Road	*96	*98
			Approximately 300 feet upstream from Dickson Hill Road.	*98	*99
			Approximately 600 feet upstream from Dickson Hill Road.	*102	*105
			At Putah South Canal	*103	*106

Maps are available for review at City Hall, Department of Public Works, 1000 Webster Street, Fairfield, California.

Send comments to The Honorable Gary Falati, Mayor, City of Fairfield, City Hall, 1000 Webster Street, Fairfield, California 94533-4883.

Colorado	Arapahoe County, Unincorporated Areas.	Big Dry Creek	Approximately 1,400 feet downstream of Colorado Boulevard.	*5,602	*5,602
			Approximately 250 feet downstream of Colorado Boulevard.	*5,611	*5,610
			Approximately 300 feet upstream of Colorado Boulevard.	*5,616	*5,620
			Approximately 2,300 feet upstream of Colorado Boulevard.	*5,635	*5,635

Maps are available for review at the Arapahoe County Planning Department, 5334 South Prince Street, Littleton, Colorado.

Send comments to The Honorable Thomas R. Eggert, Chairman, Arapahoe County Board of Commissioners, 5334 South Prince Street, Littleton, Colorado 80166.

Colorado	City of Englewood, Arapahoe County.	Little Dry Creek	At South Platte River Drive	None	*5,267
			Approximately 200 feet downstream of South Santa Fe Drive.	None	*5,271
			Approximately 140 feet upstream of South Santa Fe Drive.	None	*5,273
			Approximately 760 feet upstream of South Santa Fe Drive.	None	*5,281
			Approximately 160 feet downstream of South Broadway.	None	*5,310
			Approximately 50 feet upstream of Lincoln Street.	None	*5,319
			Approximately 80 feet upstream of Sherman Street.	None	*5,320
			Approximately 100 feet upstream of Highway 235.	None	*5,322
			At Logan Street	None	*5,324

Maps are available for review at City Hall, 3400 South Elati Street, Englewood, Colorado.

Send comments to The Honorable Susan Van Dyke, Mayor, City of Englewood, City Hall, 3400 South Elati Street, Englewood, Colorado 80110.

Colorado	Town of Pagosa Springs Archuleta County	McCabe Creek	Below bicycle path to San Juan River	*7,060	*7,059
			Approximately 280 feet downstream of San Juan Street.	*7,068	*7,070
			Just upstream of 6th Street	*7,079	*7,079
			Approximately 240 feet upstream of Florida Street.	*7,090	*7,090
			Approximately 80 feet upstream of Junita Street.	*7,107	*7,105
		West Fork, McCabe Creek	Approximately 225 feet downstream of 7th Street.	*7,080	*7,078
			At downstream edge of 7th Street	*7,084	*7,085
			Approximately 130 feet upstream of Frontage Road.	*7,093	*7,095
			Approximately 910 feet upstream of the intersection of San Juan Street and 8th Street.	None	*7,,122
			Approximately 250 feet upstream of the upstream crossing of San Juan Street.	None	*7,135

PROPOSED MODIFIED BASE FLOOD ELEVATIONS—Continued

State	City/town/county	Source of flooding	Location	#Depth in feet above ground. *Elevation in feet (NGVD).	
				Existing	Modified
Maps are available for review at Town Hall, 486 San Juan Street, Pagosa Springs, Colorado.					
Send comments to the Honorable Ross Aragon, Mayor, Town of Pagosa Springs, Town Hall, 486 San Juan Street, Pagosa Springs, Colorado 81147.					
Colorado	City of Westminster, Adams and Jefferson Counties.	Middle Branch, Hylands Creek.	At the confluence of North Branch, Hylands Creek.	*5,319	*5,319
			Approximately 400 feet upstream of Sheridan Boulevard.	*5,345	*5,346
			Approximately 50 feet downstream of West 101st Place.	*5,406	*5,405
			Approximately 50 feet upstream of 8th Green Detention Pond Culvert.	*5,417	*5,423
			Approximately 80 feet upstream of Lowell Boulevard, at Lowell Detention Pond.	*5,490	*5,492
			Approximately 450 feet upstream of Lowell Boulevard.	*5,500	*5,500
Maps are available for review at the City Engineering Department, 3031 West 76th Avenue, Westminster, Colorado.					
Send comments to the Honorable George Hovorka, Mayor, City of Westminster, 3031 West 76th Avenue, Westminster, Colorado.					
Iowa	City of Rock Rapids, Lyon County.	Rock River	About 1 mile downstream of Illinois Central Railroad.	None	*1,330
			About 3000 feet upstream of Oklahoma, Kansas and Texas Railroad.	None	*1,347
Maps available for inspection at the City Office, 310 South Third Avenue, Rock Rapids, Iowa.					
Send comments to The Honorable C.J. Gustafson, Mayor, City of Rock Rapids, 1005 South Tama, Rock Rapids, Iowa 51246.					
Oklahoma	Newcastle, City McClain County	Canadian River	Interstate Highway 35	None	*1,105
			Approximately 1.2 miles upstream of confluence of Tributary D of the Canadian River.	None	*1,172
		Tributary A of Canadian River	At confluence with Canadian River	None	*1,120
			Approximately 0.5 mile upstream of confluence	None	*1,125
		Tributary B of Canadian River	At confluence with Canadian River	None	*1,127
			Approximately .2 mile upstream of confluence with Canadian River.	None	*1,138
		Pond Creek	At confluence with Canadian River	None	*1,131
			Approximately 0.5 mile upstream of confluence	None	*1,132
		Tributary D of Canadian River	At confluence with Canadian River	None	*1,168
			Approximately 50 feet downstream of State Route 37.	None	*1,181
		Tributary No. 8 of Pond Creek	Approximately 550 feet upstream of its confluence with Pond Creek.	None	*1,183
			Approximately 0.4 mile upstream of its confluence with Pond Creek.	None	*1,190
		Tributary A.1 of the Canadian River.	Approximately 200 feet upstream of its confluence with Tributary A.1.1 of the Canadian River.	None	*1,154
			Approximately 0.5 mile upstream of its confluence with Tributary A.1.1 of the Canadian River.	None	*1,175
		Tributary A.1.1 of the Canadian River.	Approximately 450 feet upstream of its confluence with Tributary A.1 of the Canadian River.	None	*1,156
			Approximately 0.5 mile upstream of its confluence with Tributary A.1 of the Canadian River.	None	*1,181
Maps available for inspection at the Map Room, City Hall, 5 North Main, Newcastle, Oklahoma.					
Send comments to The Honorable Stanley Potts, Newcastle City Manager, McClain County, P.O. Box 179, Newcastle, Oklahoma 73065.					
Pennsylvania	West Pikeland, Township, Chester County.	Pickering Creek	Approximately .45 mile downstream of State Route 401 (Conestoga Road).	*297	*296
			Approximately .41 mile upstream of State Route 401 (Conestoga Road).	*320	*319
		Pickering Creek Overflow	Approximately 350 feet downstream of State Route 401 (Conestoga Road).	*304	*302
			Downstream side of State Route 401 (Conestoga Road).	*307	*309
Maps available for inspection by contacting the Township Secretary, Meta Miller at (215) 827-9218.					
Send comments to The Honorable Alfred Brady, Chairman of the Township of West Pikeland Board of Supervisors, Chester County, P.O. Box 286, Chester Springs, Pennsylvania 19425.					
South Carolina	Town of Irmo, Lexington & Richland Counties.	Rawls Creek	At confluence of Tributary R-2	*295	*295
			About 1,900 feet upstream of county boundary	*320	*324

PROPOSED MODIFIED BASE FLOOD ELEVATIONS—Continued

State	City/town/county	Source of flooding	Location	#Depth in feet above ground. *Elevation in feet (NGVD).	
				Existing	Modified
Maps available for inspection at the Town Hall, 7300 Woodrow Street, P.O. Box 406, Irmo, South Carolina. Send comments to The Honorable Maxcy Carter, Mayor, Town of Irmo, P.O. Box 406, Irmo, South Carolina 29063.					
Texas	Whitwright, Town Grayson County.	Bois D'Arc Creek	Approximately 690 feet downstream of Missouri-Kansas-Texas Railroad.	None	*705
			Approximately 0.8 mile upstream of Missouri-Kansas-Texas Railroad.	None	*723
Maps available for inspection at the City Hall, Whitwright, Texas. Send comments to The Honorable Clarence Pillett, Mayor of the Town of Whitewright, Grayson County, Box 516, Whitewright, Texas 75491.					
Virginia	Alexandria, City (Indep. City).	Holmes Run	Confluence with Backlick Run and Cameron Run.	*55	*49
			Upstream side of Duke Street	60*	59*
		Backlick Run	Confluence with Holmes Run and Cameron Run.	55*	49*
			Approximately 1,600 feet downstream of South Van Dorn Street.	None*	84*
		Cameron Run	Confluence with Potomac River	9*	11*
			Approximately 300 feet downstream of South Patrick Street.	10*	11*
			Upstream side of Richmond Fredericksburg Potomac Railroad.	50*	49*
			Confluence of Holmes Run and Backlick Run	55*	49*
		Potomac River	Approximately 0.4 mile downstream of I-95 (Woodrow Wilson Bridge).	9*	11*
			Approximately 2.3 miles upstream of I-95 (Woodrow Wilson Bridge).	10*	11*
Maps available for inspection at the City Hall, Room 2300, 301 King Street, Alexandria, Virginia. Send comments to The Honorable James P. Moran, Jr., Mayor of the City of Alexandria, City Hall, Room 2300, 301 King Street, Alexandria, Virginia 22314.					
Washington	Clark County (Unincorporated Areas).	Lacamas Creek	About 500 feet downstream of NE. Goodwin Road.	None	*187
			Just upstream of NE. Goodwinj Road	None	*193
			At confluence of Spring Branch	None	*196
			At confluence of Big Ditch	None	*198
			Just downstream of Fourth Plain Road	None	*212
			About 500 feet upstream of Fourth Plain Road	None	*216
Maps are available for review at the Clark County Assessor's Office, Clark County Courthouse, 1200 Franklin Street, Vancouver, Washington. Send comments to The Honorable David Sturdevant, Chairman, Clark County Board of Commissioners, P.O. Box 5000, Vancouver, Washington 98668.					
West Virginia	Hancock County Unincorporated Areas.	Harmon Creek	At downstream corporate limits	None	*681
			At upstream corporate limits	None	*701
Maps available for inspection at the County Courthouse, Court Street, New Cumberland, West Virginia. Send comments to Ms. Eleanor Straight, Hancock County Clerk, P.O. Box 367, New Cumberland, West Virginia 26047					

Issued: July 20, 1990.

Harold T. Duryee,

Administrator, Federal Insurance Administration.

[FR Doc. 90-18282 Filed 8-3-90; 8:45 am]

BILLING CODE 6718-21-M

FEDERAL COMMUNICATIONS COMMISSION

47 CFR Part 61

[CC Docket No. 90-132; DA 90-956]

Communications Common Carriers

AGENCY: Federal Communications Commission.

ACTION: Proposed rule; extension of time for filing reply comments.

SUMMARY: In an Order released July 16, 1990, the Common Carrier Bureau (the Bureau) of the Federal Communications Commission extended by thirty days, until September 4, 1990, the deadline for filing reply comments in Competition in the Interstate Interexchange Marketplace, CC Docket No. 90-132, 55 FR 18007 (April 30, 1990). The Bureau's order granted a July 9, 1990, motion filed by the United States Department of Justice (DOJ) requesting the extension. DOJ stated that additional time was necessary because of the importance and complexity of the issues presented, the volume of comments that were filed, and the conflicting demands placed on its limited resources.

DATES: Reply comments must be filed on or before September 4, 1990.

ADDRESSES: Federal Communications Commission, 1919 M Street, NW., Washington, DC 20554.

FOR FURTHER INFORMATION CONTACT: Gary Phillips, Policy and Program Planning Division, Common Carrier Bureau, (202) 632-4047.

SUPPLEMENTARY INFORMATION:

Order

In the Matter of Competition in the Interstate Interexchange Marketplace; CC Docket No. 90-132.

Adopted: July 13, 1990. Released: July 16, 1990.

By the Chief, Common Carrier Bureau:

1. On July 9, 1990, the United States Department of Justice (DOJ) filed a

motion seeking a thirty-day extension of the deadline for filing reply comments in this proceeding.[1] DOJ states that it needs additional time because of the importance and complexity of the issues presented, the volume of comments that were filed, and the conflicting demands placed on DOJ's limited resources by ongoing proceedings before the United States District Court for the District of Columbia concerning removal of the information services restriction imposed on the Bell Operating Companies by the Modification of Final Judgment.[2] No party filed comments on this motion.

2. Although it is the policy of the Commission that extensions of time shall not be routinely granted,[3] we believe, in light of the importance of the issues presented in this proceeding, that the public interest would be served by allowing DOJ the additional time it requests for filing reply comments. Therefore, we grant DOJ's motion and extend the date for filing reply comments for thirty days, until September 4, 1990.

3. Accordingly, it is ordered, pursuant to sections 4(j) and 5(c) of the Communications Act of 1934, as amended, 47 U.S.C. 154(j) and 155(c), and authority delegated thereunder pursuant to §§ 0.91 and 0.291 of the Commission's Rules, 47 CFR 0.91 and 0.291, that the motion of DOJ for extension of time is granted. The deadline for filing reply comments is extended to September 4, 1990.

Federal Communications Commission.

Richard M. Firestone,

Chief, Common Carrier Bureau.

[FR Doc. 90-18199 Filed 8-3-90; 8:45 am]

BILLING CODE 6712-01-M

---

47 CFR Parts 64, 68

[CC Docket No. 90-313]

Operator Service Providers

AGENCY: Federal Communications Commission.

ACTION: Proposed rule; correction.

SUMMARY: This document corrects a Notice of Proposed Rulemaking, 55 FR 29639, July 20, 1990, concerning operator service providers that contains an erroneous filing date for reply comments. The Notice is corrected to change the filing date for reply comments from September 24, 1990 to October 9, 1990. The Commission released an erratum on July 24, 1990, that also contains this correction.

DATES: Comments must be filed on or before September 7, 1990, and replies must be filed on or before October 9, 1990.

ADDRESSES: Federal Communications Commission, 1919 M Street NW., Washington, DC 20554.

FOR FURTHER INFORMATION CONTACT: Kurt A. Schroeder, Enforcement Division, Common Carrier Bureau, (202) 632-4887.

SUPPLEMENTARY INFORMATION: In FR Doc. 90-17034, published in the July 20, 1990, **Federal Register** on page 29639, the following corrections are made regarding the filing date for reply comments:

1. The filing date for replies listed under "**DATES**" is changed from September 24, 1990 to October 9, 1990.

2. On page 29640, third column, the first sentence of paragraph 12 of the **Federal Register** summary of the Notice of Proposed Rulemaking is corrected to read: "*It is further ordered,* pursuant to §§ 1.415 and 1.419 of the Commission's Rules, 47 CFR 1.415, 1.419, that all interested parties may file comments on the matters discussed in this Notice and the proposed rules contained below by September 7, 1990, and reply comments by October 9, 1990."

Federal Communications Commission.

Donna R. Searcy,

Secretary.

[FR Doc. 90-18320 Filed 8-3-90; 8:45 am]

BILLING CODE 6712-01-M

---

47 CFR Part 87

[PR Docket No. 90-340; FCC 90-271]

Amendment of the Aviation Services Rules Concerning the Frequency Tolerance for VHF Aircraft Radios

AGENCY: Federal Communications Commission.

ACTION: Proposed rules.

SUMMARY: The proposed rules would permit the continued use of VHF Aircraft Radios with a tolerance of 50 parts per million. The Airline Owners and Pilots Association (AOPA) and others requested this action.

DATES: Comments are due on or before September 24, 1990 and reply comments on or before October 9, 1990.

ADDRESSES: Federal Communications Commission, Washington, DC 20554.

FOR FURTHER INFORMATION CONTACT: Robert P. DeYoung Private Radio Bureau, (202) 632-7175.

SUPPLEMENTARY INFORMATION: This is a summary of the Commission's Notice of Proposed Rulemaking (NPRM) adopted July 23, 1990, and released July 31, 1990. The full text of this Commission document and the proposed rules are available for inspection and copying during normal hours in the FCC Dockets Branch (Room 230), 1919 M Street NW., Washington, DC. The full text of this decision may also be purchased from the Commission's copy contractor, International Transcription Services, Inc., (202) 857-3800, 2100 M Street NW., Washington DC 20037.

Summary of Notice of Proposed Rulemaking: Under current Commission Rules and applicable waivers, all VHF Aircraft Radios would have to meet a frequency tolerance of 30 ppm. Imposition of this requirement could render obsolete up to 93,00 currently installed radios. The petitioners have requested that the rules be amended to permit these radios to be used indefinitely. This rule making addresses that request.

We have determined that section 605(b) of the Regulatory Flexibility Act of 1980 (Pub. L. 96-354) does not apply to this rule making proceeding because, if promulgated, it will not have a significant economic impact on a substantial number of small entities. The proposed rule would allow continued operation of equipment now in the field.

Ordering Clause: Authority for issuance of this Notice is contained in sections 4(i), 303 (f) and (r) of the Communications Act of 1934, as amended, 47 U.S.C. 154(i), 303 (f) and (r). Pursuant to applicable procedures set forth in §§ 1.415 and 1.419 of the Commission's Rules (47 CFR 1.415 and 1.419) interested parties may file comments on or before September 24, 1990, and reply comments on or before October 9, 1990. All relevant and timely comments will be considered by the Commission before final action is taken in this proceeding. To file formally in this proceeding, participants must file an original and five copies of all comments, reply comments and supporting comments. If participants want each Commissioner to receive a personal copy of their comments, an original and nine copies must be filed. Comments and reply comments should be sent to Office of the Secretary, Federal Communications Commission, Washington, DC 20554. Comments and reply comments will be available for public inspection during regular business hours in the Dockets Reference

---

[1] This proceeding was initiated by a Notice of Proposed Rulemaking, released April 13, 1990. *See* Competition in the Interstate Interexchange Marketplace, 5 FCC Rcd 2627 (1990).

[2] *See United States* v. *AT&T*, 552 F. Supp. 131 (D.D.C. 1982).

[3] *See* 47 CFR 1.46(a).

Room (Room 239) of the Federal Communications Commission, 1919 M Street NW., Washington, DC. A copy of this NPRM shall be sent to the Chief Counsel for Advocacy of the Small Business Administration.

List of Subjects in 47 CFR Part 87

Aviation services, Aircraft stations, Frequencies, Radio.

Federal Communications Commission.

Donna R. Searcy,

Secretary.

[FR Doc. 90-18200 Filed 8-6-90; 8:45 am]

BILLING CODE 6712-01-M

DEPARTMENT OF THE INTERIOR

Fish and Wildlife Service

50 CFR Part 17

RIN 1018—AB42

Endangered and Threatened Wildlife and Plants; Proposed Endangered Status for a Plant, Argyroxiphium kauense (Ka'u silversword)

AGENCY: Fish and Wildlife Service, Interior.

ACTION: Proposed rule.

SUMMARY: The U.S. Fish and Wildlife Service (Service) proposes to list a plant, *Argyroxiphium kauense* (Ka'u silversword), as an endangered species under the authority contained in the Endangered Species Act of 1973, as amended (Act). This species is known only from 3 small populations totaling about 400 individuals, located on the island of Hawaii. The greatest immediate threat to the survival of this species is predation and habitat degradation by feral animals. Feral pigs prevent seedling establishment, and pigs and mouflon sheep prevent the plants from reaching maturity. The small population size with its limited gene pool compounded by a requirement for cross pollination, and single flowering within the lifetime of an individual plant, lead to threats associated with depressed reproductive vigor. Lava flows and associated wildfires also threaten this species. A determination that *Argyroxiphium kauense* is endangered would implement the Federal protection and recovery provisions provided by the Act. Comments and materials related to this proposal are solicited.

DATES: Comments from all interested parties must be received by October 5, 1990. Public hearing requests must be received by September 20, 1990.

ADDRESSES: Comments and materials concerning this proposal should be sent to Ernest F. Kosaka, Field Supervisor, U.S. Fish and Wildlife Service, 300 Ala Moana Boulevard, Room 6307, P.O. Box 50167, Honolulu, Hawaii 96850. Comments and materials received will be available for public inspection, by appointment, during normal business hours at the above address.

FOR FURTHER INFORMATION CONTACT: Joan E. Canfield, at the above address (808/541-2749 or FTS 551-2749).

SUPPLEMENTARY INFORMATION:

Background

Argyroxiphium kauense was first collected above Kapapala on the south slope of Mauna Loa by C.N. Forbes in 1911. That and another sterile collection were identified as *Argyroxiphium sandwicense* var. *macrocephalum* Gray by D.D. Keck. After the first flowering and fruiting material were collected in 1956, *A. sandwicense* var. *kauense* was described by J.F. Rock and M.C. Neal (1957), who named the plant after Kau District where it grows. Later that year, O. and I. Degener (1957) elevated the new variety to species rank. All subsequent collections and confirmed sightings are from three areas: off Powerline Road in Upper Waiakea Forest Reserve (South Hilo District) where a fence surrounds one-third of an acre of occupied habitat, in the general vicinity of Ainapo Trail in both Kapapala Forest Reserve and Kahuku Ranch (Kau District) where an extremely sparse population spans a distance of approximately 15 miles, and at Ke a Pohina on Kahuku Ranch (Kau District) where a fence provides some protection to 5 acres of habitat. *Argyroxiphium kauense* is extant at at least two of those three localities (Elizabeth Powell, University of Puerto Rico, botanist, and Kaoru Sunada, retired florist, pers. comms., 1990). Although the Ainapo population has not been seen since 1986, it presumably still exists (William Paty, Hawaii Department of Land and Natural Resources *in litt.*, 1990; Jack Lockwood, U.S. Geological Survey, pers. comm., 1990). The species occurs on State and privately owned land (Carolyn Corn, Hawaii Department of Land and Natural Resources, pers. comm., 1990). Due to insufficient material, the identity of an historic collection from Hualalai (North Kona District) cannot be confirmed; it could possibly be *A. kauense* (Carr 1985, 1990; E. Powell, *in litt.*, 1990; E. Powell, pers. comm., 1990).

Argyroxiphium kauense is a rosette shrub, usually single stemmed, its vegetative stems about 1 to 24 inches (3 to 70 centimeters (cm)) long, and flowering stems about 2 to 8 feet (ft) (0.7 to 2.5 meters (m)) long. The leaves are very narrowly sword shaped, 3- to 4-angled in cross section, about 8 to 16 inches (20 to 40 cm) long and 0.2 inches (0.5 cm) wide at the middle, nearly covered with dense, silky, silvery gray hairs. The flowering stalk has many branches, each with a flowering head of 3 to 11 ray flowers each about 0.4 inches (1 cm) long, and 50 to 200 disk flowers each about 0.2 inches (0.6 cm) long. The white or yellow to wine red flowers bloom in August and September. The fruits are dry, black seeds. *Argyroxiphium kauense* is distinguished from closely related species by its narrower leaves, hairs not completely covering the leaf surface, and fewer ray flowers per head (Carr 1985, 1990).

Argyroxiphium kauense grows primarily in moist forest openings or bogs at about 5300 to 7600 ft (1600 to 2320 m) elevation, although plants also occur on well drained substrates in relatively dry sites (Carr 1990; Rick Warshauer, Hawaii State Office of Planning, *in litt.*, 1979; J. Lockwood, pers. comm., 1990). The substrate is 'a'a or pahoehoe lava, sometimes with wet humus, on flat to steep and irregular ground (Degener *et al.* 1976, Meyrat 1982). The vegetation is most typically dry scrub or scrub forest dominated by *Metrosideros polymorpha* ('ohi'a-lehua), with such associates as *Styphelia tameiameiae, Coprosma ernodeoides, Dodonaea viscosa, Geranium cuneatum, Vaccinium reticulatum, Oreobolus furcatus, Gahnia* sp., *Deschampsia nubigena,* and *Carex alligata* (Hawaii Heritage Program 1989; Donald Reeser, formerly National Park Service, *in litt.*, 1974; R. Warshauer, *in litt.*, 1979). The open bog site shares those associates but is dominated by sedges (*Oreobolus, Rhynchospora chinensis* ssp. *spiciformis,* and *Carex montis-eeka)* (Clarke 1982).

The greatest immediate threat to the survival of *Argyroxiphium kauense* is damage from feral herbivores. Mouflon sheep and pigs have reduced this species' numbers considerably over the past two decades (Carr 1990; Clarke 1982; E. Powell, *in litt.*, 1985; E. Powell, Lani Stemmermann, University of Hawaii, Hilo and K. Sunada, pers. comms., 1990). Pigs prevent seedling establishment, and pigs and mouflon prevent the plants from reaching maturity (E. Powell, *in litt.*, 1985). As one example of the effects of feral animals on *A. kauense*, the Powerline Road population fell from about 1000 plants of all size classes in 1975 to 20 plants, all immature, in 1984 (E. Powell, *in litt.*,

1985). While portions of two populations have been fenced, one fence did not exclude mouflon or pigs entirely (E. Powell, *in litt.*, 1985). The entire species is currently estimated to number about 400 individuals (J. Lockwood, E. Powell, and K. Sunada, pers. comms., 1990). The small population size with its limited gene pool, compounded by a requirement for cross pollination and single flowering within the lifetime of an individual plant, comprise a serious potential threat to the reproductive vigor of this species, as do lava flows and associated wildfires (Kimura and Nagata 1980; Powell 1986; Linda Cuddihy, National Park Service, *in litt.*, 1990; E. Powell, pers. comm., 1990).

Federal government action on this species began as a result of Section 12 of the Act, which directed the Secretary of the Smithsonian Institution to prepare a report on plants considered to be endangered, threatened, or extinct. This report, designated as House Document No. 94–51, was presented to Congress on January 9, 1975. On July 1, 1975, the Service published a notice in the **Federal Register** (40 FR 27823) accepting the report as a petition within the context of Section 4(c)(2) (now Section 4(b)(3)(A)) of the Act, and giving notice of its intention to review the status of the plant taxa named therein. In this and subsequent notices, *Argyroxiphium kauense* was treated as under petition for listing as endangered. As a result of this review, on June 16, 1976, the Service published a proposed rule in the **Federal Register** (41 FR 24523) to determine approximately 1700 vascular plant species to be endangered pursuant to Section 4 of the Act. In 1978, amendments to the Act required that all proposals over 2 years old be withdrawn. A 1-year grace period was given to proposals already over 2 years old. On December 10, 1979, the Service published a notice in the **Federal Register** (44 FR 70796) of the withdrawal of that portion of the June 16, 1976, proposal that had not been made final, along with four other proposals that had expired.

The Service published an updated Notice of Review for plants on December 15, 1980 (45 FR 82480), September 27, 1985 (50 FR 39525), and February 21, 1990 (55 FR 6183), including *Argyroxiphium kauense* as a Category 1 candidate, meaning that the Service had substantial information indicating that a proposal for listing is warranted. Section 4(b)(3)(B) of Act requires the Secretary to make findings on certain pending petitions within 12 months of their receipt. Section 2(b)(1) of the 1982 amendments further requires all petitions pending on October 13, 1982, be treated as having been newly submitted on that date. The latter was the case for *A. kauense* because the Service had accepted the 1975 Smithsonian report as a petition. On October 13, 1983, the Service found that the petitioned listing of this species was warranted, but precluded by other pending listing actions, in accordance with Section 4(b)(3)(B)(iii) of the Act; notification of this finding was published on January 20, 1984 (49 FR 2485). Such a finding requires the petition to be recycled, pursuant to section 4(b)(3)(C)(i) of the Act. The finding was reviewed in October of 1984, 1985, 1986, 1987, 1988, and 1989. Publication of the present proposal constitutes the final 1-year finding.

Summary of Factors Affecting the Species

Section 4 of the Endangered Species Act (16 U.S.C. 1533) and regulations (50 CFR part 424) promulgated to implement the listing provisions of the Act set forth the procedures for adding species to the Federal list. A species may be determined to be an endangered or threatened species due to one or more of the five factors described in section 4(a)(1). These factors and their application to *Argyroxiphium kauense* (Rock & Neal) Degener & I. Degener (Ka'u silversword) are as follows:

A. *The present or threatened destruction, modification, or curtailment of its habitat or range.* Feral and domesticated animals (goats, pigs, sheep, and cattle) have altered and degraded the vegetation of much of Hawaii, including the areas where *Argyroxiphium kauense* may have formerly grown, and where it still exists (Mitchell 1981; Scott *et al.* 1986; Tomich 1986; E. Powell, *in litt.* 1985). The former range of this species may have extended in a band around the south and southeast flanks of Mauna Loa at about 6000 ft (1830 m) elevation, as well as its northeast flank, and possibly also included Hualalai (E. Powell, *in litt.*, 1985, 1990; E. Powell, pers, comm., 1990). During the 1930's the territorial government built "the Kau fence" on Mauna Loa's southeast flank to keep feral goats of the lava uplands from invading the lower forests. Thus these animals may well have reduced the range of *A. kauense* (Tomich 1986). Whereas specific documentation that feral animals reduced the former range of this species is lacking, there is specific recent documentation of feral mouflon sheep, pigs, and goats damaging and consuming *A. kauense*, and mechanically disturbing the adjacent ground (Clarke 1982; Stone 1985; E. Powell, *in litt.*, 1985; D. Reeser, *in litt.*, 1974; R. Warshauer, *in litt.*, 1979).

When rooting, feral pigs knock over and uproot plants; this activity caused the precipitous drop in the Powerline Road population (E. Powell, *in litt.*, 1985). The fence erected at that site for the Upper Waiakea Bog Plant Sanctuary did not enclose the entire population (C. Corn, L. Cuddihy, and L. Stemmermann, pers. comms., 1990). Pigs have severely disturbed the remainder of the bog, destroying all unfenced *Argyroxiphium kauense* plants except two new seedlings as of 1989 (E. Powell *in litt.*, 1990; E. Powell, pers, comm., 1990). Pig rooting has thus destroyed former habitat and continues to destroy potential habitat of this species. In contrast, within the fenced Sanctuary, the population has increased from 20 to 77 individuals in 5 years (E. Powell, *in litt.*, 1990). Pigs have also uprooted seedlings of *A. kauense* at the Ke a Pohina population, and have uprooted other native species at all three extant populations (E. Powell, *in litt.*, 1985; R. Warshauer, *in litt.*, 1979). While abundant seedlings of *A. kauense* have been noted at sites where pig rooting has occurred, subsequent rooting up of seedlings outweighs the extent to which pigs temporarily provide sites for seedling establishment (E. Powell, *in litt.*, 1985, 1990; Charles Wakida, Hawaii Department of Land and Natural Resources, pers. comm., 1990). Rooted up ground also provides sites for invasion by more aggressive alien plant species. Alien plants are common at the Powerline Road population and may be spreading in response to pig rooting, as is the case in other Hawaiian bogs (where weeds often spread at the expense of another *Argyroxiphium* species) (Clarke 1982; Loope *et al.* 1990; Medeiros *et al.* 1990; L. Cuddihy, pers. comm., 1990). While alien plants pose a potential threat, they are not a serious threat to *A. kauense* at present (Karen Asherman, formerly The Nature Conservancy, Hawaii, *in litt.*, 1985; L. Cuddihy and E. Powell, pers. comm., 1990).

B. *Overutilization for commercial, recreational, scientific, or educational purposes.* The species is of some horticultural and ornamental interest (now growing at Kew Gardens), and in the past seed was collected for propagation (Degener *et al.* 1976). However, such activity is not minimal. Taking and vandalism are potential threats that could result from increased specific publicity.

C. *Disease or predation.* As noted in factor A, feral mouflon sheep, pigs, and goats are known to feed on

Argyroxiphium kauense (Clarke 1982; E. Powell, *in litt.*, 1985; D. Reeser, *in litt.*, 1974; Gerald Carr, University of Hawaii, Botany Department, and K. Sunada, pers. comm., 1990). Grazing by mouflon either kills plants or causes them to resprout with multiple stems and greatly reduced vigor (E. Powell, *in litt.*, 1985). The Ke a Pohina population of *A. kauense* declined markedly as a result of the activities of a herd of an estimated 200 mouflon (K. Asherman, *in litt.*, 1985). In 1974, the year mouflon were released, this population numbered thousands of plants, including 250 mature, flowering individuals with rosettes up to 3 ft (1 m) in diameter (Degener *et al.* 1976; K. Asherman, *in litt.*, 1985; L. Stemmermann, pers. comm., 1990). Two years later, only 2071 plants with a diameter over 3 inches (8 m) were counted at this population (Charles Lamoureux, University of Hawaii, Botany Department, pers. comm., 1990). Eight years later, there were about 2000 plants, but only 1 was in flower and less than 5% of the plants were larger than 10 inches (25 cm) in diameter (E. Powell, *in litt.*, 1985, 1990). The population has continued to decline, and now number fewer than 300 individuals (K. Sunada, pers. comm., 1990). Almost all larger (mature) plants were dead and grazing damage was evident on plants as small as 2 inches (5 cm) in diameter, even within the fence erected by Kahuku Ranch to protect this species (E. Powell, *in litt.*, 1985, 1990). Mouflon had eaten the growing tips of nearly all large individuals, giving this population little promise of regeneration (G. Carr and L. Stemmermann, pers. comms., 1990). *Argyroxiphium kauense* and *Machaerina* were the only species showing signs of browse damage (E. Powell, *in litt.*, 1990). Mouflon may possibly threaten the Ainapo population as well.

Grazing damage by pigs on the leaves and stems of *Argyroxiphium kauense*, and grazing damage on leaves that had regrown following grazing are documented for the Powerline Road population (Clarke 1982). Predation by pigs is a potential threat to all populations of this species. While Kahuka Ranch and the State have fenced the greater part of the two largest populations of this species, the widely scattered Ainapo population is not protected from feral animals by fencing. Heavy browsing damage by feral goats to the apex and lateral leaves of *A. kauense* was documented in 1974 at the Ainapo population (D. Reeser, *in litt.*, 1974). Goats are a potential threat to the other populations of *A. kauense* (L. Cuddihy, E. Powell, C. Wakida, pers. comms., 1990). Cattle grazing may possibly threaten the Ainapo population (E. Powell, pers. comm., 1990). Despite claims that alien insects threaten this species, only native pollinators and other native insects have been confirmed as damaging seed, and only to a minor extent (Degener *et al.* 1976; Kimura and Nagata 1980; E. Powell, pers. comm., 1990). Most of the seed collections examined by Powell (*in litt.*, 1990) had negligible seed parasitism. *Tephritis* sp. larvae primarily consume inviable seed, so that even the few collections with appreciable seed parasitism did not affect the seed set negatively (E. Powell, *in litt.*, 1990). No significant threats to *A. kausense* from disease are currently known.

D. *The inadequacy of existing regulatory mechanisms.* One population of *Argyroxiphium kauense* and an extension of another are located on private land. The remaining populations are in State forest reserves or plant sanctuaries. State regulations prohibit the removal, destruction, or damage of plants found on State lands. However, these regulations are difficult to enforce due to limited personnel. Hawaii's endangered species act (HRS, Sect. 195D–4(a) states that "Any species of wildlife or plant that has been determined to be an endangered species pursuant to the Endangered Species Act (of 1973) shall be deemed to be an endangered species under the provisions of this chapter * * *" Further, the State may enter into agreements with Federal agencies to administer and manage any area required for the conservation, management, enhancement, or protection of endangered species (Sect. 195D–5(c)). Funds for these activities could be made available under section 6 of the Act (State Cooperative Agreements) if the species were listed as threatened or endangered. Listing of *A. kauense* will therefore reinforce and supplement the protection available to this species under State law. The Act will also offer additional protection to the species, in that it is now a violation of the Act if any person knowingly violates certain State laws or regulations applicable to the species. Listing under the Act will augment State and private conservation measures for this species by providing for habitat protection through recovery planning.

E. *Other natural or manmade factors affecting its continued existence.* The small size of the three extant populations (most recently estimated at under 300, 79, and "a few dozen" individuals) makes the species more vulnerable to certain threats (J. Lockwood, E. Powell, and K. Sunada, pers. comms., 1990). The limited gene pool may further depress reproductive vigor, or a single man caused or natural environmental disturbance could easily destroy a significant percentage of the known extant individuals. Two aspects of the reproductive system of *Argyroxiphium kauense* further exacerbate this problem: individual plants flower only once and then die, and flowers must be cross pollinated from a different plant (Power 1986; E. Power, *in litt.*, 1990). Thus if only a few plants flower at the same time, or if flowering plants are too widely separated for pollination by insects, no seed will be set. The survival of small, isolated populations with already depressesd reproductive vigor is therefore threatened. Lava flows and the wildfires they ignite are another serious potential threat to all populations of *A. kauense* (Degener *et al.* 1976; Kimura and Nagata 1980; L. Cuddihy, *in litt.*, 1990; E. Powell, pers. comm., 1990). The only large population is located within a half mile of a 1950 flow from the active southwest rift of Mauna Loa. In 1984 a lava flow approached the Powerline Road population, where fire is also a potential threat to *A. kauense* in dry years (E. Powell, *in litt.*, 1990; L. Stemmermann, pers. comm., 1990).

The Service has carefully assessed the best scientific and commercial information available regarding the past, present, and future threats faced by this species in determining to propose this rule. Based on this evaluation, the preferred action is to list *Argyroxiphium kauense* as endangered. The low remaining number of individuals, poor species reproductive potential, and vulnerability to destruction by feral animals and lava flows indicate that the species is in danger of extinction throughout all or a significant portion of its range, and therefore fits the Act's definition of endangered.

Critical Habitat

Section 4(a)(3) of the Act, as amended, requires that to the maximum extent prudent and determinable, the Secretary propose critical habitat at the time the species is proposed to be listed as endangered or threatened. The Service finds that designation of critical habitat is not presently prudent for this species. Such a determination would result in no known benefit to *Argyroxiphium kauense*. Parts of two of the three extant populations are on State land; State government agencies can be alerted to the presence of the plant without the publication of critical habitat description and maps. The publication of such descriptions and maps would

potentially increase the degree of threats from taking or vandalism because live specimens of *A. kauense* would be of interest to curiosity seekers or collectors of rare plants. Publication of critical habitat descriptions and maps would make *A. kauense* more vulnerable to collection and increase enforcement problems. All involved parties and landowners have been notified of the location and importance of protecting this species' habitat. Protection of the species' habitat will be addressed through the recovery process. Therefore, it would now be prudent to determine critical habitat for *Argyroxiphium kauense.*

Available Conservation Measures

Conservation measures provide to species listed as endangered or threatened under the Endangered Species Act include recognition, recovery actions, requirements for Federal protection, and prohibitions against certain practices. Recognition through listing encourages and results in conservation actions by Federal, State, and private agencies, groups, and individuals. The Endangered Species Act provides for possible land acquisition and cooperation with the State and requires that recovery actions be carried out for all listed species. Since *Argyroxiphium kauense* is known to occur on State land, cooperation between Federal and State agencies is necessary to provide for its conservation. The protection required on Federal agencies and the prohibitions against certain activities involving listed plants are discussed, in part, below.

Section 7(a) of the Act, as amended, requires Federal agencies to evaluate their actions with respect to any species that is proposed or listed as endangered or threatened and with respect to its critical habitat, if any is being designated. Regulations implementing this interagency cooperation provision of the Act are codified at 50 CFR part 402. Section 7(a)(4) requires Federal agencies to confer informally with the Service on any action is likely to jeopardize the continued existence of a proposed species or result in destruction or adverse modification or proposed critical habitat. If a species is listed subsequently, section 7(a)(2) requires Federal agencies to ensure that activities they authorize, fund, or carry out are not likely to jeopardize the continued existence of such a species or to destroy or adversely modify its critical habitat. If a Federal action may affect a list species or its critical habitat, the responsible Federal agency must enter into formal consultation with the Service. No Federal involvement is known or anticipated that would affect this species, as all known sites are on State or privatey owned land.

The Act and its implementing regulations found at 50 CFR 17.61, 17.62, and 17.63 for endangered plant species set forth a series of general trade prohibitions and exceptions that apply to all endangered plants. With respect to *Argyroxiphium kauense,* all trade prohibitions of section 9(a)(2) of the Act, implemented by 50 CFR 17.61, would apply. These prohibitions, in part, would make it illegal for any person subject to the jurisdiction of the United States to import or export, transport in interstate or foreign commerce in the course of a commercial activity, sell or offer for sale this species in interstate or foreign commerce, or to remove and reduce to possession the species from areas under Federal jurisdiction. In addition, the Act would prohibit the malicious damage or destruction of the species on any area under Federal jurisdiction, or the removal, cutting, digging up, damaging or destroying of the plant on any other area in knowing violation of any State law or regulation or in the course of any violation of a State criminal trespass law. Certain exceptions apply to agents of the Service and State conservation agencies. The Act and 50 CFR 17.62 and 17.63 also provide for the issuance of permits to carry out otherwise prohibited activities involving endangered plant species under certain circumstances. It is anticipated that few trade permits would ever be sought or issued because the species in uncommon in cultivation and is very rare in the wild.

Requests for copies of the regulations on plants and inquiries regarding them may be addressed to the Office of Management Authority, U.S. Fish and Wildlife Service, P.O. Box 3507, Arlington, Virginia 22203–3507 (703/358–2104 or FTS 921–2232).

Public Comments Solicited

The Service intends that any final action resulting from this proposal will be as accurate and as effective as possible. Therefore, comments or suggestions from the public, other concerned governmental agencies, the scientific community, industry, or any other interested party concerning this proposed rule are hereby solicited. Comments particularly are sought concerning:

(1) Biological, commercial trade, or other relevant data concerning any treat (or lack thereof) to this species;

(2) The location of any additional populations of this species and the reasons why any habitat should or should not be determined to be critical habitat as provided by Section 4 of the Act;

(3) Additional information concerning the range, distribution, and population size of this species; and

(4) Current of planned activities in the subject area and their possible impacts on the species.

Any final decision on this proposal to list *Argyroxiphium kauense* will take into consideration the comments and any additional information received by the Service, and such communications may lead to a final regulation that differs from this proposal.

The Endangered Species Act provides for a public hearing on this proposal, if requested. Requests must be received within 45 days of the date of publication of the proposal. Such requests must be made in writing and addressed to the Field Supervisor (see **ADDRESSES** section).

National Environmental Policy Act

The Fish and Wildlife Service has determined that an Environmental Assessment, as defined under the authority of the National Environmental Policy Act of 1969, need not be prepared in connection with regulations adopted pursuant to section 4(a) of the Endangered Species Act of 1973, as amended. A notice outlining the Service's reasons for this determination was published in the **Federal Register** on October 25, 1983 (48 FR 49244).

References Cited

Carr, G.D. 1985. Monograph of the Hawaiian *Madiinae* (Asteraceae): *Argyroxiphium,* Dubautia, and *Wilkesia.* Allertonia 4:1–123.

Carr, G.D. 1990. *Argyroxiphium: in* Wagner, W.L., D.R. Herbst, and S.H. Sohmer, Manual of the flowering plants of Hawai'i. University of Hawaii Press and Bishop Museum Press, Honolulu, pp. 258–26.

Clarke, G. 1982. Memo to State Botanist on Upper Waiakea silversword bog, dated March 19, 1982, State of Hawaii, Dept. of Land and Natural Resources, Div. of Forestry and Wildlife, Hilo. 18 unnum. pp.

Degener, O. and I. Degener. 1957. Flora Hawaiiensis, family 344. *Argyroxiphium.* Publ. priv. 2 pp.

Degener, O., I. Degener, K. Sunada, and Mrs. K. Sunada. 1976. *Argyroxiphium kauense,* the Kau silversword. Phytologia 33:173–177.

Hawaii Heritage Program. 1989. Element Occurance Record for *Argyroxiphium kauense, PDAST 0 P 040.002, dated March 4, 1989, Honolulu,* Unpubl. 2 pp.

Kimura, B.Y. and K.M. Nagata. 1980. Hawaii's vanishing flora. Oriental Publ. Co., Honolulu. 88 pp.

Loope, L.L., A.C. Medeiros, and B.H. Gagne. 1990. Recovery of vegetation of a montane bog in Haleakala National Park following protection from feral pig rooting.

Coop. Natl. Park Resources Stud. Unit, Univ. Hawaii, Honolulu, Techn. Rep. In review.

Medeiros, A.C., L.L. Loope, and B.H. Gagne. 1990. Degradation of vegetation in two montane bogs of Haleakala National Park: 1982–1988. Coop. Natl. Park Resources Stud. Unit, Univ. Hawaii, Honolulu, Techn. Rep. In review.

Meyrat, A.K. 1982. A morphometric analysis and taxonomic appraisal of the Hawaiian silversword *Argyroxiphium sandwicense* DC. (Asteraceae). Coop. Natl. Park Resources Stud, Unit, Univ. Hawaii, Honolulu, Techn. Rep. 46:1–58.

Mitchell, F. 1981. Mouflon sheep and kau silversword. Notes Waimea Arbor. & Bot. Gard. 8(1):6–7.

Powell, E. 1986. Breeding biology and conservation of silverswords (Abst.). Proc. 6th Conf. Nat. Sci., Hawaii Volcanoes Natl. Park, p. 65.

Rock, J.F. and M.C. Neal. 1957. A new variety of silversword. Occas. Pap. Bernice P. Bishop Mus. 22(4):31–33.

Scott, J.M., S. Mountainspring, F.L. Ramsey, and C.B. Kepler. 1986. Forest bird communities of the Hawaiian Islands: their dynamics, ecology, and conservation. Stud. Avian Biol. 9:1–431.

Stone, C.P. 1985. Alien animals in Hawai'i's native ecosystems: toward controlling the adverse effects of introduced vertebrates: *in* Stone, C.P. and J.M. Scott (eds.), Hawai'i's terrestrial ecosystems: preservation and management. Coop. Natl. Park Resources Stud. Unit, Univ. Hawaii, Honolulu, pp. 251–297.

Tomich, P.Q. 1986. Mammals in Hawaii. 2nd ed. Bishop Museum Special Publ. 76. Bishop Museum Press, Honolulu. 375 pp.

Author

The primary author of this proposed rule is Dr. Joan E. Canfield, Pacific Islands Office, see ADDRESSES section.

List of Subjects in 50 CFR Part 17

Endangered and threatened species, Exports, Imports, Reporting and record-keeping requirements, and Transportation.

Proposed Regulation Promulgation

PART 17—[AMENDED]

Accordingly, it is hereby proposed to amend part 17, subchapter B of chapter I, title 50 of the Code of Federal Regulations, as set forth below:

1. The authority citation for part 17 continues to read as follows:

Authority: 16 U.S.C. 1361–1407; 16 U.S.C. 1531–1543; 16 U.S.C. 4201–4245; Pub. L. 99–625, 100 Stat. 3500; unless otherwise noted.

2. It is proposed to amend § 17.12(h) by adding the following, in alphabetical order under the family Asteraceae to the List of Endangered and Threatened Plants:

§ 17.12. Endangered and threatened plants.

* * * * *

(h) * * *

Species		Historic range	Status	When listed	Critical habitat	Special rules
Scientific name	Common name					
Asteraceae—Aster family:						
Argyroxiphium kauense	Ka'u silversword	U.S.A. (HI)	E		NA	NA

Dated: July 17, 1990.

James C. Leupold,

Acting Director, Fish and Wildlife Service.

[FR Doc. 90–18233 Filed 8–3–90; 8:45 am]

BILLING CODE 4310–55–M

50 CFR Part 17

RIN 1018–AB42

Endangered and Threatened Wildlife and Plants; Proposed Endangered Status for the Winged Mapleleaf Freshwater Mussel

AGENCY: Fish and Wildlife Service, Interior.

ACTION: Proposed rule.

SUMMARY: The Service proposes to determine endangered status for the winged mapleleaf (*Quadrula fragosa*) and thereby provide the species protection under the Endangered Species Act of 1973, as amended (Act). Historically, this freshwater mussel occurred extensively in the Mississippi, Tennessee, Ohio and Cumberland river drainages in the states of Ohio, Indiana, Missouri, Tennesse, Kansas, Nebraska, Iowa, Illinois, Wisconsin, Oklahoma and Kentucky. As a result of land use changes, river alterations and pollution, the winged mapleleaf mussel has been reduced to a single known population located in the St. Croix River between northwestern Wisconsin and east-central Minnesota. Critical habitat is not being proposed. The Service seeks data and comments from the public on this proposal.

DATES: Comments from all interested parties must be received by October 5, 1990. Public hearing requests must be received by September 20, 1990.

ADDRESSES: Comments and materials concerning this proposal should be sent to the Regional Director, U.S. Fish and Wildlife Service, Federal Building, Ft. Snelling, Twin Cities, Minnesota 55111. Comments and materials received will be available for public inspection, by appointment, during normal business hours at the above address.

FOR FURTHER INFORMATION CONTACT: James M. Engel, Endangered Species Coordinator at the above address (612/725–3276 or FTS 725–3276).

SUPPLEMENTARY INFORMATION:

Background

The earliest record of the winged mapleleaf (*Quadrula fragosa*) dates from 1835 when Conrad (1835) described this North American freshwater mussel from the Scioto River, Ohio. He described this species as similar to the mapleleaf (*Quadrula*), but "much more ventricose" having more prominent tubercles and being very distinct. Occurrence records of the winged mapleleaf were reported not infrequently until about 1920. From the 1920's to the present, few occurrences were reported and some experts considered it extinct. These few post 1920 occurrence records include the collection of three specimens from Wayland, Missouri, (The Ohio State Museum of Zoology collection) possibly as late as 1968 and a small extant population from the St. Croix River which borders Minnesota and Wisconsin (Doolittle 1988). Records suggest that the St. Croix River population is the only extant population remaining.

The winged mapleleaf is closely related to and morphologically similar to the mapleleaf, a ubiquitous species of eastern North America. The winged mapleleaf can be distinguished using several characteristics. The shell is more inflated and more quadrate in outline. The shell's beaks are more elevated and turned forward over the lunule (Baker 1928). The winged mapleleaf is more alate and has ridges on the alae while the mapleleaf often has distinct pustules (David H. Stansbery, Ohio State University, personal comunications, 1989). An additional characteristic that

may aid in distinguishing these two mussels is microhabitat. The winged mapleleaf seems to occupy riffles, while the mapleleaf is a mud-loving species. Ortman (1925) suggested that the winged mapleleaf prefers gravel bars in the Duck River of Tennessee. David Heath (Wisconsin Department of Natural Resources, personal communications 1989) found the winged mapleleaf in riffle habitat in the St. Croix River, between Minnesota and Wisconsin, and absent from muddy microhabitat. In contrast, the mapleleaf is known to exploit mud substrata and impoundments (Ortmann 1925, La Rocque 1967, Fuller 1980a).

Little is known about the ecology and habits of the winged mapleleaf, presumably because of its historic rarity and early population reductions. Baker (1928) reported it occupied larger rivers on a mud bottom in water 2 meters or more in depth. Ortmann (1925) indicated it may prefer gravel bars. Recent observation on the extant population (Heath, pers. comm.) indicated that it prefers gravel bars in shallow, clear water of a large river.

Few historical records exist that report population demographics or brooding period of the winged mapleleaf. Recent attempts have been made to determine when the winged mapleleaf broods young. No individuals have been observed brooding young. In addition, in a sample of 41 specimens, none were collected that were younger than four years of age (Heath and Rasmussen 1990). Population density at the only known location was one individual per 52 square meters and constituted less than 0.02% of the mussel community.

A fairly rich mussel assemblage of 32 species inhabit the extant winged mapleleaf site. Most associates are fairly common species in the upper Mississippi River system, but several species are considered rare. These rare species, which are characteristic of well preserved streams, include the Federal category 2 spectacle case (*Cumberlandia monodonta*) and salamander mussel (*Simpsonaias ambigua*) and the Federally endangered Higgins' eye (Lampsillis higginsi). Other rare species that co-occur include the snuffbox (*Epioblasma triquetra*), purple wartyback (*Cyclonaias tuberculata*), and buckhorn (*Tritoginia verrucosa*).

The historic geographic range of the winged mapleleaf is fairly well documented. It occurred in at least eleven states; Ohio, Indiana, Missouri, Tennessee, Kansas, Nebraska, Iowa, Illinois, Wisconsin, Oklahoma, and Kentucky. Disregarding the single known extant population, nearly all collections were made prior to 1925.

Simpson (1900, 1914) and La Rocque (1967) reported the winged mapleleaf from the Ohio, Cumberland, and Tennessee rivers systems west probably to Minnesota, Nebraska and Kansas. It was reported from the Ohio River by the Commonwealth of Kentucky Department of Fish and Wildlife Resources (1989), Sterki (1907), Coker (1921), Call (1896, 1900), Simpson (1900, 1914), La Rocque (1967), Stansbery (1985, 1989), and vouchered in the United States National Museum (USNM) collection. Ohio River tributaries where the winged mapleleaf was reported include the Scioto River (Conrad 1935, the Ohio State University Museum of Zoology [OSUMZ] collection), the Licking River (Commonwealth of Kentucky State Natural Preserves Commission 1989, Commonwealth of Kentucky Department of Fish and Wildlife Resources 1989), Raccoon Creek (OSUMZ collection, USMN collection, La Rocque 1967) and the White River (Call 1896, Academy of Natural Sciences of Philadelphia [ANSP] collection).

Within the Tennessee River system, collections have been reported from the Tennessee River (Ortmann 1925, Starnes and Bogan 1988), the Cumberland River (Wilson and Clarke 1914, Danglade 1914, Starnes and Bogan 1988, Commonwealth of Kentucky State Natural Preserves Commission 1989, Commonwealth of Kentucky Department of Fish and Wildlife Resources 1989), the Harpeth River (Starnes and Bogan 1988), and from the Duck River (Ortmann 1925, Starnes and Bogan 1988).

In the upper Mississippi River system, it has been reported from the Mississippi River (Utterback 1915–1916, Stansbery 1989, Frest 1987, Grier and Mueller 1922–1923, Shimek 1888, 1921, Field Museum of Natural History [FMNH] collection, OSUMZ collection, Illinois Natural History Survey [INHS] collection, USNM collection, Keys 1889, Havlik and Stansbery 1977, Havlik and Marking 1980, Heath 1981–1985, Bell Museum of Natural History [BMNH] collection). Upper Mississippi River tributaries containing winged mapleleaf included the Cedar River (Frest 1987, Shimek 1888, FMNH collection, OSUMZ collection, USMN collection); the Des Moines River (Keyes 1889); the Racoon River; the Iowa River (Keyes 1889); the Illinois, Kaskaskia, and Spoon Rivers (Grier and Mueller 1992–1923, Baker 1906; FMNH collection, ANSP collection, Starrett 1971, and Strode 1891, 1892); and the Sangamon River (OSUMZ collection, ANSP collection, University of Michigan Museum of Zoology [UMMZ] collection, INHS collection). Additional upper Mississippi River drainage locales where the winged mapleleaf have been recorded include the Wisconsin and Baraboo Rivers (Baker 1928, Morrison 1929, Heath 1986b, FMNH collection, BMNH collection, OSUMZ collection), the Minnesota River (Havlik 1990, OZMUZ collection, BMNH collection), and the St. Croix River (Heath 1985, University of Illinois Museum of Natural History [UIMNH] collection).

In Oklahoma, the winged mapleleaf occurred in the Boggy, Little, and Neosho Rivers (Isley 1925) and in Nebraska in the Bow and Blue Rivers (Aughey 1877). Missouri records were from the Osage, Fox, and 102 (at St. Joseph) Rivers (Utterback 1915–1916, OSUMZ collection). Kansas records were from the Fall River and Soldier Creek (Popenoe 1885, Scammon 1906, Murry, and Leonard 1962).

Summary of Factors Affecting the Species

Section 4(a)(1) of the Endangered Species Act (16 U.S.C. 1531 *et seq.*) and regulations (50 CFR part 424) promulgated to implement the listing provision of the Act set forth the procedures for adding species to the Federal lists. A species may be determined to be endangered or threatened according to one or more of the five factors described in section 4(a)(1). These factors and their application to the winged mapleleaf (*Quadrula fragosa*) are as follows:

A. *The present or threatened destruction, modification, or curtailment of its habitat or range.* Historically, the winged mapleleaf freshwater mussel was known from twelve states and three major drainage systems in North America. This species has been eliminated from 99% of its historic range. At present, only a single small population is known to remain. Habitat modification including land use changes, river channel modifications, and pollution are the primary factors threatening the continued existence of the winged mapleleaf. The species was usually found in well preserved large to medium-sized clear-water streams in riffles or on gravel bars. These areas have been lost due to the development of impoundments, channelization, soil erosion, and sediment accumulation originating from land use practices.

The single remaining population is small, located on less than five miles of the St. Croix River within a National Scenic Riverway administered by the United States National Park Service

(NPS) which separates Wisconsin and Minnesota. Additional threats to this small population include expanded agriculture or modified land use practices in the watershed, toxic substance spills, point discharges of harmful chemicals, low water levels, and large recreational boat traffic. The small size of the population makes it particularly vulnerable to single catastrophic events and genetic deterioration. These factors may affect the host fish (presently unknown) which is necessary for the reproduction of the winged mapleleaf in addition to affecting the remaining mussel population.

B. *Overutilization for commercial, recreational, scientific, or educational purposes.* Collection of the winged mapleleaf for these purposes is believed to have been a minor factor in its decline. It was harvested during the early 1900's for the pearl button industry in the United States (Coker 1921), but at present the remaining population is protected from harvest by state harvesting laws and scientific collection permits. Some illegal recreational collecting probably does occur.

C. *Disease or predation.* No disease or predation have been recorded for the winged mapleleaf.

D. *The inadequacy of existing regulatory mechanisms.* The winged mapleleaf is presently protected by one of the two states it presently inhabits. The Act offers possibilities for additional protection through section 6 by cooperation between States and the Service, and cooperation through section 7 (interagency cooperation) requirements, in particular with the NPS St. Croix National Scenic Riverway.

E. *Other natural or manmade factors affecting its continued existence.* The single remaining population is small, located on less than five miles of the St. Croix River and is immediately threatened by lack of any reproduction. During surveys in 1988 and 1989, Heath and Rasmussen (1990) were unable to locate individuals less than four years of age although members of related species in the genus *Quadrula* were collected that were less than four years of age. In addition, they were unable to locate any winged mapleleaf individuals brooding young. Lack of young individuals and brooding females could be a natural cyclic phenomenon, an artifact of sampling, or an abrupt cessation of reproduction, but other mussels at the location did not evidence reproductive problems. If recent observations reflect trends in the population, the continued existence of the species is in serious doubt.

During the fall of 1989, extremely low water levels, in part caused by the operation of a hydroelectric dam located immediately upstream of the population, partially dewatered the winged mapleleaf's habitat. At present, the extent of damage to the population is unknown, but mortality may have occurred. Future dewatering of this habitat, compounded by predicted low water levels from the "green house effect," threaten the continued existence of the species.

The Service has carefully assessed the best scientific and commercial information available regarding the past, present, and future threats faced by this species in determining to propose this rule. Based on this evaulation, the preferred action is to list the winged mapleleaf as an endangered species. Due to the threats and vulnerability of the single remaining population, it is believed that the species will continue to decline unless immediate corrective actions are taken. For reasons detailed below, it is not considered prudent to propose designation of critical habitat.

Critical Habitat

Section 4(a)(3) of the Act, as amended, requires that, to the maximum extent prudent and determinable, the Secretary propose critical habitat at the time the species is proposed to be endangered or threatened. The Service finds that designation of critical habitat is not presently prudent for the winged mapleleaf freshwater mussel. This determination is based on the premise that such designation would not be beneficial to the species (50 CFR 424.12), and little additional benefit would be gained, since the single extant location is presently receiving protection from the NPS and the State of Wisconsin. Critical habitat designation would not provide additional protection over that afforded through the normal section 7 consultation procedures. The NPS and the States of Minnesota and Wisconsin are cognizant of the location of this population of winged mapleleaf and of the importance of protecting its habitat.

Available Conservation Measures

Conservation measures provided to species listed as endangered or threatened under the Endangered Species Act include recognition, recovery actions, requirements for Federal protection, and prohibitions against certain practices. Recognition through listing encourages and results in conservation actions by Federal, State and private agencies, groups, and individuals. The Endangered Species Act provides for possible land acquisition and cooperation with the States and requires that recovery actions be carried out for all listed species. The protection required of Federal agencies and the prohibition against taking and harm are discussed, in part, below.

Section 7(a) of the Act, as amended, requires Federal agencies to evaluate their actions with respect to any species that is proposed or listed as endangered or threatened and with respect to its critical habitat, if any is being designated. Regulations implementing this interagency cooperation provision of the Act are codified at 50 CFR part 402. Section 7(a)(4) requires agencies to confer informally with the Service on any action that is likely to jeopardize the continued existence of a proposed species or result in destruction or adverse modification of proposed critical habitat. If a species is listed subsequently, section 7(a)(2) requires Federal agencies to ensure that activities they authorize, fund, or carry out are not likely to jeopardize the continued existence of such a species or to destroy or adversely modify its critical habitat. If a Federal action may affect a listed species or its critical habitat, the responsible Federal agency must enter into formal consultation with the Service. The NPS administers the portion of the St. Croix River where the winged mapleleaf is found. The Service has not identified any ongoing or proposed NPS projects that could affect this species.

The Act and its implementing regulation found at 50 CFR 17.21 set forth a series of general prohibitions and exceptions that apply to all endangered wildlife. These prohibitions, in part, make it illegal for any person subject to the jurisdiction of the United States to take (included harass, harm, pursue, hunt, shoot, wound, kill, trap, or collect; or to attempt any of these), import or export, ship in interstate commerce in the course of commercial activity, or sell or offer for sale in interstate or foreign commerce any listed species. It also is illegal to possess, sell, deliver, carry, transport, or ship any such wildlife that has been been taken illegally. Certain exceptions apply to agents of the Service and State conservation agencies.

The Act and 50 CFR 17.22 and 17.23 also provide for the issuance of permits to carry out otherwise prohibited activities involving endangered species under certain circumstances. Such permits are available for scientific purposes, to enhance the propagation or survival of the species, and/or for incidental take in connections with otherwise lawful activities. In some

instances, permits may be issue for a specified time to relieve undue economic hardship that would be suffered if such relief were not available.

Public Comments Solicited

The Service intends that any final action resulting from this proposal will be as accurate and as effective as possible. Therefore, comments or suggestions from the public, other concerned governmental agencies, the scientific community, industry, or any other interested party concerning this proposed rule are hereby solicited. Comments particularly are sought concerning:

(1) Biological, commercial trade, or other relevant data concerning any threat (or lack thereof) to the winged mapleleaf;

(2) The location of any additional populations of this species and the reasons why any habitat should or should not be determined to be critical habitat as provided by Section 4 of the Act;

(3) Additional information concerning the range, distribution, and population size of this species;

(4) Current or planned activities in the subject area and their possible impacts on this species.

Final promulgation of the regulation on the winged mapleleaf will take into consideration the comments and any additional information received by the Service, and such communications may lead to a final regulation that differs from this proposal.

The Endangered Species Act provides for a public hearing on this proposal, if required. Requests must be received within 45 days of the date of publication of the proposal. Such requests must be made in writing and addressed to (see **ADDRESSES** section above).

National Environmental Policy Act

This Fish and Wildlife Service has determined that an Environmental Assessment, as defined under the authority of the National Environmental Policy Act of 1969, need not be prepared in connection with regulations adopted pursuant to section 4(a) of the Endangered Species Act of 1973, as amended. A notice outlining the Service's reasons for this determination was published in the **Federal Register** on October 25, 1983 (48 FR 49244).

References Cited

A complete list of all references cited herein, as well as others, is available upon request from (see **ADDRESSES** above).

Author

The primary author of this proposed rule is William F. Harrison (see **ADDRESSES** section). Mr. David J. Heath, Wisconsin Department of Natural Resources, Rhinelander, Wisconsin 54501 (715) 362–7616, provided substantial information.

List of Subjects in 50 CFR Part 17

Endangered and threatened species, Exports, Imports, Reporting and record-keeping requirements, and Transportation.

Proposed Regulation Promulgation

Accordingly, it is hereby proposed to amend part 17, subchapter B of chapter I, title 50 of the Code of Federal Regulations, as set forth below:

PART 17—[AMENDED]

1. The authority citation for part 17 continues to read as follows:

Authority: 16 U.S.C. 1361–1407; 16 U.S.C. 1531–1543; 16 U.S.C. 4201–4245; Pub. L. 99–625, 100 Stat. 3500; unless otherwise noted.

2. It is proposed to amend § 17.11(h) by adding the following, in alphabetical order under CLAMS, to the List of Endangered and Threatened Wildlife:

§ 17.11 Endangered and threatened wildlife.

* * * * *

(h) * * *

Species		Historic range	Vertebrate population where endangered or threatened	Status	When listed	Critical habitat	Special rules
Common name	Scientific name						
CLAMS							
*	*	*	*	*	*	*	
Mussel, winged mapleleaf	*Quadrula fragosa*	U.S.A. (WI, IL, MN, KS, MO, OH, NE, TN, KY, IN, IA, OK).	NA	E		NA	NA
*	*	*	*	*	*	*	

Dated: July 16, 1990.

James C. Leupold,

Director, Fish and Wildlife Service.

[FR Doc. 90–18234 Filed 8–3–90; 8:45 am]

BILLING CODE 4310–55–M

Notices

Federal Register
Vol. 55, No. 151
Monday, August 6, 1990

This section of the FEDERAL REGISTER contains documents other than rules or proposed rules that are applicable to the public. Notices of hearings and investigations, committee meetings, agency decisions and rulings, delegations of authority, filing of petitions and applications and agency statements of organization and functions are examples of documents appearing in this section.

DEPARTMENT OF AGRICULTURE

Food Safety and Inspection

[Docket No. 90-014N]

National Advisory Committee on Microbiological Criteria for Foods; Meeting

Notice is hereby given that a meeting of the National Advisory Committee on Microbiological Criteria for Foods, will be held on Monday, Tuesday, and Wednesday, August 27–29, 1990. The meeting will be held at the Westin Hotel, 1672 Lawrence Street, Denver, Colorado. The Committee provides advice and recommendations to the Secretaries of Agriculture and Health and Human Services concerning the development of microbiological criteria by which the safety and wholesomeness of food can be assessed, including criteria for microorganisms that indicate whether foods have been produced using good manufacturing practices.

Scheduled sessions are as follows:

(1) Monday, August 27, 1:30 p.m. to 5 p.m.—Session of the *Listeria monocytogenes* subcommittee.

(2) Tuesday, August 28, 8:30 a.m. to 5 p.m.—Concurrent sessions of the Meat and Poultry Working Group and the Seafood Working Group.

(3) Wednesday, August 29, 8:30 a.m. to 12 noon—Concurrent sessions of the Meat and Poultry Working Group and the Seafood Working Group.

(4) Wednesday, August 29, 1:30 p.m. to 5 p.m.—Full Committee session.

Notice is hereby given on the appointment of members to the Committee. The members are: Dr. Catherine Adams, Food Safety and Inspection, Washington, DC; Dr. Douglas Archer, Center for Food Safety and Applied Nutrition, Washington, DC; Dr. Howard Bauman, Consultant, St. Louis Park, Minnesota; Dr. Rodney Bowling, Monfort, Inc., Greeley, Colorado; Dr. Frank Calia, University of Maryland Hospital, Baltimore, Maryland; Dr. Mitchell Cohen, Centers for Disease Control, Atlanta, Georgia; Dr. David W. Dressen, University of Georgia, Athens, Georgia; Dr. John T. Fruin, Dwight David Eisenhower Army Medical Center, Fort Gordon, Georgia; Dr. Damien Gabis, Silliker Laboratories, Chicago Heights, Illinois; Mr. Spencer Garrett, National Marine Fisheries Service, Pascagoula, Mississippi; Dr. Robert Gravani, Cornell University, Ithaca, New York; Dr. James Jay, Wayne State University, Detroit, Michigan; Dr. John Kvenberg, Center for Food Safety and Applied Nutrition, Washington, DC; Dr. Richard Lechowich, Illinois Institute of Technology, Summit-Argo, Illinois; Dr. Jung Sun Lee, University of Alaska, Kodiak, Alaska; Dr. Kenneth May, Food and Drug Industries, Wilkesboro, North Carolina; Dr. Ranzell Nickelson II, Applied Microbiological Services, Inc., San Antonio, Texas; Dr. Merle Pierson, Virginia Polytechnic Institute and State University, Blacksburg, Virginia; Dr. Martha Rhodes, Florida Department of Agriculture and Consumer Servcies, Tallahassee, Florida; Dr. William Sperber, Pillsbury Company, Minneapolis, Minnesota; Dr. David Theno, Jr., Theno and Associates, Modesto, California; and Dr. Bruce Tompkin, Swift-Eckrich, Oak Brook, Illinois.

The Committee meetings are open to the public on a space available basis. Comments of interested persons may be filed prior to or after the meeting and should be addressed to Ms. Catherine M. DeRoever, Director, Executive Secretariat, U.S. Department of Agriculture, Food Safety and Inspection Service, Room 3175, South Agriculture Building, 14th and Independence Avenue SW., Washington, DC 20250. In submitting comments, please reference the docket number appearing in the heading of this Notice. Background materials are available for inspection by contacting Ms. DeRoever on (202) 447–9150.

Done at Washington, DC, on July 31, 1990.

Lester M. Crawford,
Chairman.

[FR Doc. 90–18196 Filed 8–3–90; 8:45 am]
BILLING CODE 3410-DM-M

Forest Service

Winding Stair Tourism and Recreation Advisory Council; Meeting

AGENCY: Forest Service, USDA.

ACTION: Notice of meeting.

SUMMARY: This notice sets forth the schedule and proposed agenda of a meeting of the Winding Stair Tourism and Recreation Advisory Council. The meeting will be open to the public. This notice also describes the functions of the Council. Notice of this meeting is required under the National Advisory Committee Act.

DATES: August 20, 1990, 3 p.m.

ADDRESSES: The meeting location is at the Bob Lee Kidd Civic Center, Poteau, Oklahoma. Send written statements to Forest Supervisor, Ouachita National Forest, P.O. Box 1270, Hot Springs, AR 71902.

FOR FURTHER INFORMATION CONTACT: Robert LaVal, (501)–321–5317.

SUPPLEMENTARY INFORMATION: The Winding Stair Tourism and Recreation Advisory Council was created by the Winding Stair Mountain National Recreation and Wilderness Area Act (16 U.S.C. 460vv–13). The Council, comprised of 16 members, appointed by the Secretary of Agriculture, will meet periodically. The purpose of this council is advisory in nature. The Act designates the Secretary to appoint a special advisory group from the local area in which the Ouachita National Forest is located to assist in the preparation of the tourism and recreation section of the Ouachita National Forest Land and Resource Management Plan amendment as required under subsections 15(b) and (c). Subsection 15(b) provides for the promotion of tourism and recreation in ways consistent with the purposes for which the wilderness areas, the botanical areas, the National Recreation Area, the National Scenic and Wildlife Area, and the National Scenic Area are designated.

Glen Sullivan, Director of the Oklahoma Tourism and Recreation Department will chair the meeting. Representatives of the Forest Service will attend from the Department of Agriculture including the designated officer of the Federal Government. The agenda for this meeting will be to: begin

the preparation of the report to be submitted to the Secretary of Agriculture on the findings of the Council subcommittees. Plans will be made for the next meeting and new business will be discussed.

Dated: July 30, 1990.

John M. Curran,

Forest Supervisor.

[FR Doc. 90–18205 Filed 8–3–90; 8:45 am]

BILLING CODE 3410–11–M

DEPARTMENT OF COMMERCE

Foreign-Trade Zones Board

[Docket No. 31–90]

Foreign-Trade Zone 8—Toledo, OH; Application for Expansion

An application has been submitted to the Foreign-Trade Zones Board (the Board) by the Toledo-Lucas County Port Authority (Port Authority), grantee of FTZ 8, requesting authority to expand its zone to include a site at the Toledo airport, adjacent to the Toledo Customs port of entry. The application was submitted pursuant to the provisions of the Foreign-Trade Zones Act, as amended (19 U.S.C. 81a–81u), and the regulations of the Board (15 CFR Part 400). It was formally filed on July 19, 1990.

On October 11, 1960, the Board authorized the Port Authority to establish a foreign-trade zone in the Toledo, Ohio, area (Board Order 51, 25 FR 9909, 10/15/60). Expansions were authorized by the Board on January 22, 1973 (Board Order 92, 38 FR 3015, 1/31/73), and on January 11, 1985 (Board Order 277, 50 FR 2702, 1/18/85). The zone project currently consists of a 150-acre site within the Port of Toledo complex at the Overseas Cargo Center, 3322 St. Lawrence Drive, Toledo.

The proposed expansion would add a site (350 acres) at the Toledo Express Airport, Toledo's main commercial airport, located in Swanton, Ohio, some 5 miles west of Toledo. The airport, including the proposed zone site, is owned by the city of Toledo and operated by the Port Authority.

No specific manufacturing requests are being made at this time. Such requests would be made to the Board on a case-by-case basis.

In accordance with the Board's regulations, an examiners committee has been appointed to investigate the application and report to the Board. The committee consists of: Dennis Puccinelli (Chairman), Foreign-Trade Zones Staff, U.S. Department of Commerce, Washington, DC 20230; John F. Nelson, District Director, U.S. Customs Service, North Central Region, 55 Erieview Plaza, 6th Floor, Cleveland, OH 44114; and, Colonel Hugh F. Boyd III, District Engineer, U.S. Army Engineer District Buffalo, 1776 Niagara Street, Buffalo, NY 14207.

Comments concerning the proposed expansion are invited in writing from interested parties. They should be addressed to the Board's Executive Secretary at the address below and postmarked on or before September 20, 1990.

A copy of the application is available for public inspection at each of the following locations:

Port Director's Office, U.S. Customs Service, 136 N. Summit Street, Toledo, OH 43604

Office of the Executive Secretary, Foreign-Trade Zones Board, U.S. Department of Commerce, Room 2835, 14th & Pennsylvania Avenue NW., Washington, DC 20230.

Dated: July 27, 1990.

Dennis Puccinelli,

Acting Executive Secretary.

[FR Doc. 90–18243 Filed 8–3–90; 8:45 am]

BILLING CODE 3510–DS–M

International Trade Administration

Sanctions for Violations of an Administrative Protective Order

AGENCY: Import Administration, International Trade Administration, Commerce.

ACTION: Notice of status of investigation into charges of violation of administrative protective orders in antidumping and countervailing duty proceedings.

SUMMARY: This is a notice of the status of investigations into charges of violation of administrative protective orders in antidumping and countervailing duty proceedings.

EFFECTIVE DATE: August 6, 1990.

FOR FURTHER INFORMATION CONTACT: Stephen J. Powell, Chief Counsel for Import Administration, U.S. Department of Commerce, 14th Street and Constitution Avenue NW., Washington, DC 20230; telephone: (202) 377–8916.

SUPPLEMENTARY INFORMATION: The International Trade Administration, U.S. Department of Commerce (ITA), wishes to remind those members of the bar who appear before it in antidumping and countervailing duty proceedings of the extreme importance of protecting the confidentiality of business proprietary information obtained pursuant to administrative protective order ("APO") during the course of those proceedings. In order that the gravity with which ITA views violations of its APO's might be better appreciated, ITA is publishing the following report on recent allegations that the provisions of an ITA APO have been violated.

Individual(s) violated an APO by preparing on behalf of a person not authorized to receive business proprietary information, an ITA submission that included information covered by an APO. The APO-covered information was disclosed in the course of responding to a submission made by the opposing party. The individual(s) also failed to redact from a public submission made to the Department APO-covered information. In doing so, the individual(s) violated the application for disclosure of proprietary information filed by the individual(s) incorporated by reference in the APO.

In this case, the individual(s) involved was/were (1) barred from receiving access to business proprietary information submitted to ITA for a period of six months; (2) issued private reprimands which warned that future violations by them or otherwise associated with the law firm would be treated more severely; (3) required to send a letter of apology to counsel for the company whose information may have been compromised; (4) required to submit to the ITA a written office plan describing how business proprietary information provided to the firm would be used and protected; and (5) required to attend a training session on procedures for protecting proprietary data.

We consider these sanctions appropriate for the following reasons: first, the individual(s) promptly had the third party destroy the copy of the submission in his possession. The individual(s) also promptly removed the challenged submission from the public and confidential files of the ITA when notified that the public versions of the submissions may have contained business proprietary information and that it appeared that from the submission that disclosure to authorized persons occurred. Second, the individual(s) fully cooperated with the ITA's preliminary investigation, expending considerable time, effort and expense. The opposing party was reluctant to provide business proprietary information to the Department for release under the APO and did so based on the assurances that the APO would protect against disclosure of the business proprietary information. An affidavit from the party to whom the APO disclosure was made,

not only indicated that (s)he did not recall the disclosure of APO-covered information, but also indicated that their business relationship with the opposing party had not changed. Counsel for the opposing party, however, told the Department that action may have been taken against an opposing party's employee for providing the APO-covered information to the Department under these circumstances and that the business relationship may have been harmed.

Serious harm can result from the disclosure of proprietary information obtained under APO. ITA will continue to investigate vigorously allegations that the provisions of APO's have been breached, and is prepared to impose sanctions commensurate with the nature of the violations, including letters of reprimand, denial of access of proprietary information, and debarment from practice before the ITA.

Roger W. Wallace,

Deputy Under Secretary for International Trade.

[FR Doc. 90-18245 Filed 8-3-90; 8:45 am]

BILLING CODE 3510-DS-M

[A-201-504]

Porcelain-on-Steel Cooking Ware From Mexico; Preliminary Results of Antidumpting Duty Administrative Review

AGENCY: International Trade Administration/Import Administration, Department of Commerce.

ACTION: Notice of preliminary results of antidumping duty administrative review.

SUMMARY: In response to requests by two respondents, the Department of Commerce has conducted an administrative review of the antidumping duty order on porcelain-on-steel cooking ware from Mexico. The review covers two manufacturers/exporters of this merchandise to the United States and the period December 1, 1987 through November 30, 1988. We preliminarily determine the dumping margins to be 1.02 percent for Troqueles y Esmaltes, S.A. and 1.09 percent for CINSA, S.A. We invite interested parties to comment on these preliminary results.

EFFECTIVE DATE: August 6, 1990.

FOR FURTHER INFORMATION CONTACT: Lorenza Olivas or Anne D'Alauro, Office of Countervailing Compliance, International Trade Administration, U.S. Department of Commerce, Washington, DC 20230; telephone: (202) 377-2786.

SUPPLEMENTARY INFORMATION:

Background

On December 2, 1986, the Department of Commerce (the Department) published in the **Federal Register** (52 FR 43415) an antidumping duty order on porcelain-on-steel cooking ware from Mexico. Two respondents, Troqueles y Esmaltes, S.A. (TRES) and CINSA, S.A. de C.V., requested in accordance with § 353.53a(a) of the Commerce Regulations (19 CFR 353.53a(a)(1988)) that we conduct an administrative review. We published a notice of initiation on January 31, 1989 (54 FR 4871). The Department has now conducted that administrative review in accordance with section 751 of the Tariff Act of 1930, as amended (the Tariff Act).

Scope of Review

Imports covered by this review are shipments of porcelain-on-steel cooking ware, including tea kettles, which do not have self-contained electric heating elements. All of the foregoing are constructed of steel and are enameled or glazed with vitreous glasses. During the review period, such merchandise was classifiable under item number 654.0818 of the *Tariff Schedules of the United States Annotated* (TSUSA). These products are currently classifiable under HTS item number 7323.94.00. Kitchenware currently entering under item number 7323.94.00.10 is not subject to the order. The TSUSA and HTS item numbers are provided for convenience and Customs purposes. The written description remains dispositive.

The review covers two manufacturers/exporters, TRES and CINSA, to the United States of Mexcian porcelain-on-steel cooking ware and the period December 1, 1987 through November 30, 1988.

United States Price

In calcualting United States price, the Department used purchase price and exporter's sales price, as defined in section 772 of the Tariff Act. For those sales made directly to unrelated parties prior to importation into the United States, we based the United States price on purchase price, in accordance with section 772(b) of the Act. In those cases where sales were made through a related sales agent in the United States to an unrelated purchaser prior to the date of importation, we also used purchase price as the basis for determining United States price. For these sales, the Department determined that purchase price was the appropriate determinant of United States price based on the following elements:

1. The merchandise in question was shipped directly from the manufacturers to the unrelated buyers, without being introduced into the inventory of the related selling agent;

2. This was the customary commercial channel for sales of this merchandise between the parties involved; and

3. The related selling agent located in the United States acted only as a processor of sales-related documentation and a communication link with the unrelated U.S. buyers. *See, Final Determination of Sales at Less Than Fair Value; Color Picture Tubes from Korea,* 52 FR 44186 (1987).

Where all the above elements are met, we regard the routine selling functions of the exporter as merely having been relocated geographically from the country of exportation to the United States.

Where sales to the first unrelated purchaser occurred after importation into the United States, we based United States price on exporter's sales price, in accordance with section 772(c) of the Tariff Act. Purchase price and exporter's sales price were based on the packed, f.o.b San Antonio, Texas, and f.o.b. Laredo, Texas, price to unrelated purchasers in the United States. We made adjustments, where applicable, for brokerage and user fees, foreign inland freight and insurance, customs duties, indirect selling expenses, and credit.

Article VI.5 of the General Agreement on Tariffs and Trade provides that "[n]o * * * product shall be subject to both antidumping and countervailing duties to compensate for the same situation of dumping or export subsidization." This provision is implemented by section 772(d) (1) (D) of the Tariff Act which prohibits the assessment of dumping duties on the portion of the margin attributable to an export subsidy. Therefore, we have increased the U.S. price by the amount of the export subsidies found in the concurrent countervailing duty review. No other adjustments were claimed or allowed.

Foreign Market Value

In calculating foreign market value, the Department used home market price, as defined in section 773 of the Tariff Act, when sufficient quantities of such or similar merchandise were sold in the home market, at or above the cost of production, to provide a basis for comparison. Home market price was based on the packed, ex-factory or delivered price to related and unrelated purchasers in the home market. Where applicable, we made adjustments for inland freight and insurance, credit expenses, discounts, rebates, commissions; indirect U.S. selling

expenses to offset those home market commissions, home market indirect selling expenses up to the amount of U.S. indirect selling expenses, and physical differences in the merchandise. We used constructed value for CINSA's home market models for which there were insufficient sales at or above the cost of production. Constructed value consisted of the sum of materials, fabrication, overhead, general expenses, profit, and U.S. packing. In accordance with section 773(e) (1) (B), we used the actual amount of general expenses because those amounts were more than the statutory minimum of ten percent. We used the statutory minimum of eight percent for profit. We made an adjustment to constructed value for credit.

Preliminary Results of the Review

As a result of our comparsion of United States price with foreign market value, we preliminarily determine the margins to be:

Manufacturer/ Exporter	Time period	Margin (Percent)
TRES	12/1/87–11/30/88	1.02
CINSA	12/1/87–11/30/88	1.09

Parties to the proceeding may request disclosure within 5 days of the date of publication of this notice. Any interested party may request a hearing within 10 days of publication. Any hearing, if requested, will be held 44 days after the date of publication or the first workday thereafter. Pre-hearing briefs and/or written comments from interested parties may be submitted not later than 30 days after the date of publication. Rebuttal briefs and rebuttals to written comments, limited to issues raised in those comments, may be filed not later than 37 days after the date of publication. The Department will publish the final results of the administrative review including the results of its analysis of any such written comments or oral argument.

Representatives of interested parties may request disclosure of propreietary information under administrative protective order within 10 days of the date that the interested party becomes a party to the proceeding but in no event later than the date the case briefs are due.

The Department shall determine, and the Customs Service shall assess, antidumping duties on all appropriate entries. Individual differences between United States price and foreign market value may vary from the percentages stated above. The Department will issue appraisment instructions on each exporter directly to the Customs Service.

Further, as provided for by section 751(a) (1) of the Tariff Act, a cash deposit of estimated antidumping duties based on the above margins shall be requied for these firms. For any shipments of this merchandise manufactured or exported by the remaining known manufacturers/ exporters not covered in this review, the cash deposit will continue to be at the rate published in the final determination of sales at less than fair value for these firms (52 FR 43415, December 2, 1986). For any future entries of this merchandise from a new exporter, not covered in this or prior administrative reviews, whose first shipments occurred after November 30, 1988 and who is unrelated to the reviewed firms or any previously reviewed firm, a cash deposit of 1.09 percent shall be required. These deposit requirements are effective for all shipments of Mexican porcelain-on-steel cooking ware entered, or withdrawn from warehouse, for consumption on or after the date of publication of the final results of this administrative review.

This administrative review and notice are in accordance with section 751(a) (1) of the Tariff Act (19 U.S.C. 1675(a (1)) and 19 CFR 353.22.

Dated: July 26, 1990.

Eric I. Garfinkel,

Assistant Secretary for Import Administration.

[FR Doc. 90–18244 Filed 8–3–90; 8:45 am]

BILLING CODE 3510–DS–M

National Oceanic and Atmospheric Administration

Intent To Conduct Public Meeting on Preparation of Draft Environmental Impact Statement for the Proposed Ashepoo-Combahee-Edisto (A.C.E.) Basin National Estuarine Research Reserve, SC

AGENCY: National Oceanic and Atmospheric Administration, National Oceanic Service, Office of Ocean and Coastal Resource Management, DOC.

ACTION: Notice of intent to conduct public meeting and prepare a draft environmental impact statement.

SUMMARY: In accordance with section 315 of the Coastal Zone Management Act of 1972, as amended, the State of South Carolina and the National Oceanic and Atmospheric Administration (NOAA) intend to conduct a public meeting to present a draft management plan for the proposed A.C.E. Basin National Estuarine Research Reserve and to discuss significant issues related to the preparation of a draft environmental impact statement (DEIS). The DEIS and draft management plan address research, monitoring, education and resource protection needs for the reserve.

Discussion

In February 1990, NOAA approved the nomination of the ACE Basin in South Carolina as a proposed research reserve. Research reserves provide natural coastal habitats as field laboratories for baseline ecological studies and education programs. Research and monitoring programs are designed to enhance basic scientific understanding of coastal environments and aid in resource management decisionmaking.

The South Carolina Coastal Council (SCCC) and the South Carolina Wildlife and Marine Resource Department (SCWMRD) have developed a draft management plan for the proposed reserve system. The draft plan identifies specific needs and priorities related to research, monitoring, education, and resource protection at the approved site. It also contains a five-year administration plan and budget as well as a discussion of volunteer programs, public access, visitor use policies, and facilities development needs. The draft plan will be available for review at the public meeting.

At the public meeting, the SCCC, SCWMRD and NOAA will provide a synopsis of the draft management plan and will solicit comments on significant socioeconomic and environmental issues which will be incorporated into a draft environmental impact statement.

The public meeting will be held at 7 p.m. on Thursday, August 30, 1990 in the Colleton County Council Chambers, Old Jail Building, at Jefferies Boulevard, in Walterboro, South Carolina, 29448.

Interested parties who wish to submit suggestions, comments or substantive information regarding the scope or content of this proposed environmental impact statement are invited to attend. Parties who wish to respond in writing should do so by September 10, 1990.

Comments may be submitted in writing to Ms. Cheryl A. Graham, Program Specialist, Marine and Estuarine Management Division, Office of Ocean and Coastal Resource Management, NOAA, 1825 Connecticut Avenue NW., Suite 714, Washington, DC 20235 (Telephone 202/673–5122).

Federal Domestic Assistance Catalog Number 11.420 (Coastal Zone Management) Estuarine Sanctuaries

Dated: July 30, 1990.

Virginia K. Tippie,

Assistant Administrator for Ocean Services and Costal Zone Management.

[FR Doc. 90-18197 Filed 8-3-90; 8:45 am]

BILLING CODE 3510-08-M

Marine Mammals; Application for Permit by Scott D. Kraus (P466)

Notice is hereby given that an Applicant has applied in due form for a Permit to take marine mammals as authorized by the Marine Mammal Protection Act of 1972 (16 U.S.C. 1361-1407), the Regulations Governing the Taking and Importing of Marine Mammals (50 CFR part 216), the Endangered Species Act of 1973 (16 U.S.C. 1531-1544), and the National Marine Fisheries Service regulations governing endangered fish and wildlife permits (50 CFR parts 217-222).

1. Applicant: Scott D. Kraus, Edgerton Research Laboratory, New England Aquarium, Central Wharf, Boston, Massachusetts 01220-3309.

2. *Type of Permit:* Scientific Research.

3. Name and Number of Marine Mammals: Right whale *(Balaena glacialis)* 350.

4. *Type of Take:* Take is by harassment for the purposes of obtaining photographs for individual identification. Individual whales may be approached for identification up to 5 times during the course of a year. The applicant also requests authorization to collect samples and/or the entire specimen from any right whale that dies and strands.

5. *Location and Duration of Activity:* Eastern North America for a 5-year period.

Concurrent with the publication of this notice in the **Federal Register**, the Secretary of Commerce is forwarding copies of this application to the Marine Mammal Commission and the Committee of Scientific Advisors.

Written data or views, or requests for a public hearing on this application should be submitted to the Assistant Administrator for Fisheries, National Marine Fisheries Service, U.S. Department of Commerce, 1335 East West Highway, room 7324, Silver Spring, Maryland 20910, within 30 days of the publication of this notice. Those individual requesting a hearing should set forth the specific reasons why a hearing on this particular application would be appropriate. The holding of such hearing is at the discretion of the Assistant Administrator for Fisheries.

All statements and opinions contained in this application are summaries of those of the Applicant and do not necessarily reflect the views of the National Marine Fisheries Service.

Documents submitted in connection with the above application are available for review by appointment in the following offices:

Office of Protected Resources, National Marine Fisheries Service, 1335 East West Highway, room 7324, Silver Spring, Maryland 20910 (301/427-2289);

Director, Southeast Region, National Marine Fisheries Service, NOAA, 9450 Koger Boulevard, St. Petersburg, Florida 33702 (813/893-3141); and

Director, Northeast region, National Marine Fisheries Service, NOAA, One Blackburn Drive, Gloucester, Massachusetts 01930 (508/281-9200).

Dated: July 31, 1990.

Nancy Foster,

Director, Office of Protected Resources, National Marine Fisheries Service.

[FR Doc. 90-18219 Filed 8-3-90; 8:45 am]

BILLING CODE 3510-22-M

Marine Mammals; Application for Permit by Southwest Fisheries Science Center (P77 No. 43)

Notice is hereby given that an Applicant has applied in due form for a Scientific Research Permit to take marine mammals as authorized by the Marine Mammal Protection Act of 1972 (16 U.S.C. 1361-1407), the Regulations Governing the Taking and Importing of Marine Mammals (50 CFR part 216), the Endangered Species Act of 1973 (16 U.S.C. 1531-1544), and the National Marine Fisheries Service regulations governing endangered fish and wildlife permits (50 CFR parts 217-222).

1. *Applicant:* Southwest Fisheries Science Center, P.O. Box 271, La Jolla, CA 92038.

2. *Type of Permit:* Scientific research under the Marine Mammal Protection Act and to enhance the propagation or survival under the Endangered Species Act.

3. *Name:* Hawaiian monk seal (*Monachus schauinslandi*).

4. *Type of Take and Numbers:* The Applicant is requesting to take sixty (60) adult female Hawaiian monk seals by capture, tagging, and release. Thirty (30) of the seals will be tagged in 1990; the additional thirty (30) will be tagged in 1991. Tissue samples (tagging plugs) from the tagging processs for the sixty (60) seals will be retained for analysis. The purpose of the research is to estimate accurately the immigration, birth, and survival rates of adult females at Laysan Island, and to ascertain the extent to which mobbing related injuries and mortalities impact monk seal populations.

5. *Location and Duration of Activity:* The requested activity would occur at Laysan Island, Hawaii. The duration of the requested activitiy is for a period of two (2) years; tagging will occur September through December each year.

Concurrent with the publication of this notice in the **Federal Register**, the Secretary of Commerce is forwarding copies of this application to the Marine Mammal Commission and the Committee of Scientific Advisors.

Written data or views, or requests for a public hearing on this application should be submitted to the Assistant Administrator for Fisheries, National Marine Fisheries Service, U.S. Department of Commerce, 1335 East West Highway, Silver Spring, Maryland 20910, within 30 days of the publication of this notice. Those individuals requesting a hearing should set forth the specific reasons why a hearing on this particular application would be appropriate. The holding of such a hearing is at the discretion of the Assistant Administrator for Fisheries.

Documents submitted in connection with the above application are available for review by appointment at the following offices:

Office of Protected Resources, National Marine Fisheries Service, 1335 East West Highway, room 7324, Silver Spring, MD 20910, (301/427-2289); and

Director, Southwest Region, National Marine Fisheries Service, 300 South Ferry Street, Terminal Island, CA 90731, (213/514-6196).

Dated: July 31, 1990.

Nancy Foster,

Director, Office of Protected Resources National Marine Fisheries Service.

[FR Doc. 90-18220 Filed 8-3-90; 8:45am]

BILLING CODE 3510-22-M

Endangered Marine Mammals; Request for Permit Modification

AGENCY: National Marine Fisheries Service, NOAA, DOC.

ACTION: Request for modification to scientific research permit #675.

SUMMARY: Notice is hereby given that Dr. C. Scott Baker has requested a modification to Permit No. 675 pursuant to the provisions of § 216.33(d) and (2) of the Regulations Governing and Taking and Importing of Marine Mammals (50 CFR part 216) and § 220.24 of the Regulations Governing Endangered Species (50 CFR part 217-222).

Permit No. 675, issued August 24, 1989 (54 FR 35220), authorized taking by harassment of up to 400 humpback whales (*Megaptera novaeangliae*)

during photo-identification activities and the collection of skin biopsies in the territorial waters of the United States. The Permit was modified on November 15, 1989 (54 FR 47543) to include Alaska, Hawaii, the Mariana Islands, and the Antarctic continent. The Permit was again modified on May 31, 1990 (55 FR 22056) to allow for an increase in the collection and importation from the sea of biopsy samples from a maximum of 80 minke whales (*Balaenoptera acutorostrata*) and 40 southern right whales (*Balaena australis*) from the Antarctic Peninsula region of the southern hemisphere. The modification also allowed for the importation of biopsy samples of humpback whales collected in the territorial waters of other nations.

This proposed modification would allow for the collection of skin biopsy samples from a maximum of 200 gray whales (*Eschrichtius robustus*), 200 bowhead whales (*Balaena mysticetus*), and 100 blue whales (*Balaenoptera musculus*) in the territorial waters of other nations.

Concurrent with the publication of this notice in the Federal Register, the Secretary of Commerce is forwarding copies of this application to the Marine Mammal Commission and the Committee of Scientific Advisors.

Written data or views, or requests for a public hearing on this proposed modification should be submitted to the Assistant Administrator for Fisheries, National Marine Fisheries Service, U.S. Department of Commerce, 1335 East West Highway, room 7330, Silver Spring, Maryland 20910, within 30 days of the publication of this notice. Those individuals requesting a hearing should set forth the specific reasons why a hearing on this particular proposal would be appropriate. The holding of such a hearing is at the discretion of the Assistant Administrator for Fisheries. All statements and opinions contained in this proposed modification are summaries of those of the applicant and do not necessarily reflect the views of the National Marine Fisheries Service.

Documents submitted in connection with the above are available for review by interested persons in the following offices:

Permit Division, Office of Protected Resources, National Marine Fisheries Service, 1335 East West Highway, room 7330, Silver Spring, Maryland 20910;

Director, Alaska Region, National Marine Fisheries Service, NOAA, 709 West 9th Street, Federal Bldg., Juneau, Alaska 99802;

Director, Northeast Region, National Marine Fisheries Service, NOAA, One Blackburn Drive, Gloucester, Massachusetts 01930;

Director, Northwest Region, National Marine Fisheries Service, NOAA, 7600 Sand Point Way NE., BIN C15700, Seattle, Washington 98115;

Director, Southeast Region, National Marine Fisheries Service, NOAA, 9450 Koger Boulevard, St. Petersburg, Florida 33702;

Director, Southwest Region, National Marine Fisheries Service, NOAA, 300 South Ferry Street, Terminal Island, California 90731–7415; and

Administrator, Western Pacific Program Office, National Marine Fisheries Service, NOAA, 2570 Dole Street, room 106, Honolulu, Hawaii 96822–2396.

Dated: July 31, 1990.

Nancy Foster,

Director, Office of Protected Resources, National Marine Fisheries Service.

[FR Doc. 90–18221 Filed 8–3–90; 8:45 am]

BILLING CODE 3510–22–M

COMMITTEE FOR THE IMPLEMENTATION OF TEXTILE AGREEMENTS

Amendment of Coverage of Certain Part-Categories for Cotton and Man-Made Fiber Textile Products Produced or Manufactured in Various Countries

July 31, 1990.

AGENCY: Committee for the Implementation of Textile Agreements (CITA).

ACTION: Issuing a directive to the Commissioner of Customs amending coverage of certain part-categories.

EFFECTIVE DATE: August 7, 1990.

FOR FURTHER INFORMATION CONTACT: Lori E. Goldberg, International Trade Specialist, Office of Textiles and Apparel, U.S. Department of Commerce, (202) 377–3400.

SUPPLEMENTARY INFORMATION:

Authority. Executive Order 11651 of March 3, 1972, as amended; Section 204 of the Agricultural Act of 1956, as amended (7 U.S.C. 1854).

To facilitate the implementation of bilateral textile agreements and export visa arrangements based upon the Harmonized Tariff Schedule (HTS), for goods entered into the United States for consumption or withdrawn from warehouse for consumption on and after July 1, 1990, regardless of the date of export, coverage of certain part-categories is being amended on all visa and certification arrangements and all import controls for countries with part-Categories 229–F, 359–C (Mexico only), 359–0, 369–0, 459–0, 648–K, 659–B, 659–C (Mexico only), 659–0 and 669–T.

The attached directive contains HTS numbers which were published in the supplement to the Harmonized Tariff Schedule.

A description of the textile and apparel categories in terms of HTS numbers is available in the CORRELATION: Textile and Apparel Categories with the Harmonized Tariff Schedule of the United States (see Federal Register notice 54 FR 50979, published on December 11, 1989).

Auggie D. Tantillo,

Chairman, Committee for the Implementation of Textile Agreements.

Committee for the Implementation of Textile Agreements

July 31, 1990.

Commissioner of Customs,
Department of the Treasury, Washington, DC 20229.

Dear Commissioner: This directive amends, but does not cancel, all import control and counting directives issued to you by the Chairman of CITA, which include part-Categories 229–F, 359–C (Mexico only), 359–O, 369–O, 459–O, 648–K, 659–B, 659–C (Mexico only), 659–O and 669–T, produced or manufactured in various countries and entered into the United States for consumption or withdrawn from warehouse for consumption on and after July 1, 1990, regardless of the date of export.

This directive amends, but does not cancel, the directive of December 22, 1988, as amended, which amended visa requirements for all countries for which visa arrangements are in place with the United States Government.

Effective on August 7, 1990, you are directed to make the changes shown below for all countries with part-Categories 229–F, 359–C (Mexico only), 359–O, 369–O, 459–O, 648–K, 659–B, 659–C (Mexico only), 659–O and 669–T. These changes are effective for goods entered into the United States for consumption or withdrawn from warehouse for consumption on and after July 1, 1990, regardless of the date of export.

Category	Obsolete No.	Replaced by new No.
229–F	5608.11.0000	5608.11.0090
229–O	5608.90.2000	5608.90.2090
359–C (Mexico)	6211.32.0005	6211.32.0007
	6211.42.0005	6211.42.0007
359–O	6211.32.0005	6211.32.0007
	6211.42.0005	6211.42.0007
369–O		6302.21.1055
		6302.21.2055
		6302.31.1055
		6302.31.2055
		6307.90.9545
459–O		6114.30.2030
		6117.10.2010
		6406.99.1505
648–K	6104.69.2010	6104.69.2030
	6104.69.2020	6104.69.2060
659–B	6114.30.2020	6114.30.2060
659–C (Mexico)	6211.33.0005	6211.33.0007
	6211.43.0005	6211.43.0007

Category	Obsolete No.	Replaced by new No.
659–O	6177.10.2000	6117.10.2030
	6211.33.0005	6211.33.0007
	6211.43.0005	6211.43.0007
	6406.99.1520	6406.99.1510
669–T	6306.22.9000	6306.22.9030

The Committee for the Implementation of Textile Agreements has determined that these actions fall within the foreign affairs exception to the rulemaking provisions of 5 U.S.C. 553(a)(1).

Sincerely,

Auggie D. Tantillo,

Chairman, Committee for the Implementation of Textile Agreements.

[FR Doc. 90–18242 Filed 8–3–90; 8:45 am]

BILLING CODE 3510–DR–M

DEPARTMENT OF DEFENSE

Department of the Air Force

USAF Scientific Advisory Board; Meeting

July 31, 1990.

The USAF Scientific Advisory Board Ad Hoc Committee on Space Power Technology will meet on August 22, 1990 from 8 a.m. to 5 p.m. at Headquarters, United States Air Force, Washington, DC.

The purpose of this meeting will be to review Air Force, DOE, SDIO, DARPA, NASA and related industry IR&D space power technology development efforts and to recommend the direction(s) of Air Force investment in this technology area. This meeting will involve discussions of classified defense matters listed in section 552b(c) of title 5, United States Code, specifically subparagraph (1) thereof, and accordingly will be closed to the public.

For further information, contact the Scientific Advisory Board Secretariat at (202) 697–8404.

Patsy J. Conner,

Air Force Federal Register Liaison Officer.

[FR Doc. 90–18277 Filed 8–3–90; 8:45 am]

BILLING CODE 3910–01–M

USAF Scientific Advisory Board; Meeting

July 31, 1990.

The USAF Scientific Advisory Board Ad Hoc Committee on Post Deployment Software Support will meet on August 30, 1990 from 8 to 5 at the Pentagon, Washington, DC.

The purpose of this meeting will be to review Air Force Post Deployment Software Support (PDSS) capabilities and to make recommendations in these areas: actions that AFLC might take to improve the PDSS process, technology that AFLC might evaluate for possible adoption, and strategy that AFLC might follow to develop and implement a mechanism for estimating cost and schedule. This meeting will involve discussions of classified defense matters listed in section 552b(c) of title 5, United States Code, specifically subparagraph (1) thereof, and accordingly will be closed to the public.

For further information, contact the Scientific Advisory Board Secretariat at (202) 697–8404.

Patsy J. Conner,

Air Force Federal Register Liaison Officer.

[FR Doc. 90–18278 Filed 8–3–90; 8:45 am]

BILLING CODE 3910–01–M

DEPARTMENT OF EDUCATION

[CFDA No.: 84, 120–A & B]

Minority Science Improvement Program; Invitations for Applications for New Awards for Fiscal Year 1991

Program purpose: To effect long-range improvement in science education at predominantly minority institutions and to increase the flow of underrepresented ethnic minorities into scientific careers.

Deadlines for transmittal of applications: Applications for new awards for Special Project grants must be mailed or hand-delivered on or before October 5, 1990. Applications for new awards under Intitutional, Cooperative and Design Project grants must be mailed or hand-delivered on or before February 1, 1991.

Deadline for intergovernmental review: For Special Projects: December 4, 1990; for Institutional, Cooperative and Design Projects: April 1, 1991.

Application forms available: August 14, 1990.

Available funds: $5,600,000. Approximately $1,400,000 will be available for Special Projects. The remaining $4,200,000 will be available for Institutional, Cooperative and Design Projects.

Estimated range of awards: Institutional Projects $100,000–$300,000; Design Projects $15,000–$20,000; Cooperative Projects $400,000–$500,000; and Special Projects $22,000–$150,000.

Estimated average size of awards: $240,000 for Institutional, $455,000 for Cooperative Projects, $17,000 for Design Projects, and $55,000 for Special Projects.

Estimated number of awards: Institutional, Cooperative and Design Projects—18. Special Projects—26.

Note: The Department is not bound by any estimate in this notice.

Project period: From 12 to 36 months.

Applicable regulations: (a) The Education Department General Administrative Regulation (EDGAR), 34 CFR parts 74, 75, 77, 79, 82, and 85; and (b) the regulations for this program, 34 CFR part 637.

For application forms or information: Dr. Argelia Velez-Rodriguez, U.S. Department of Education, 400 Maryland Avenue SW., room 3022, ROB–3, Washington, DC 20202–5251. Telephone: (202) 708–4662.

Authority: 20 U.S.C. 1135b–1135b–3 and 1135d–1135d–6.

Dated: July 30, 1990.

Leonard L. Haynes III,

Assistant Secretary for Postsecondary Education.

[FR Doc. 90–18217 Filed 8–3–90; 8:45 am]

BILLING CODE 4000–01–M

Student Financial Assistance Advisory Committee; Meeting

AGENCY: Advisory Committee on Student Financial Assistance, ED.

ACTION: Notice of upcoming meeting.

SUMMARY: This notice sets forth the schedule and proposed agenda of a forthcoming meeting of the Advisory Committee on Student Financial Assistance. This notice also describes the functions of the Committee. Notice of this meeting is required under section 10(a)(2) of the Federal Advisory Committee Act. This document is intended to notify the general public of the opportunity to attend.

DATES: August 21, 1990 beginning at 9 a.m. and ending at 5 p.m.; August 22, 1990 beginning at 9 a.m. and ending at 5 p.m.

ADDRESSES: Montana State University, Strand Union Building, Bozeman, Montana.

FOR FURTHER INFORMATION CONTACT: Brian K. Fitzgerald, Staff Director, Advisory Committee on Student Financial Assistance, Room 4600, ROB–3, 7th & D Streets, SW., Washington, DC 20202–7582 (202) 708–7439.

SUPPLEMENTARY INFORMATION: The Advisory Committee on Student Financial Assistance is established under section 491 of the Higher Education Act of 1965 as amended by Public Law 100–50 (20 U.S.C. 1098). The Advisory Committee is established to provide advice and counsel to the Congress and the Secretary of Education on student financial aid matters, including providing technical expertise with regard to systems of need analysis and application forms, making recommendations that will result in the

maintenance of access to postsecondary education for low- and middle-income students, and conducting a study of institutional lending in the Stafford Student Loan Program. The Congress has also directed the Advisory Committee to provide assistance in preparing for the reauthorization of the Higher Education Act.

The Advisory Committee will meet in Bozeman, Montana from 9 a.m. to 5 p.m. on August 21; and from 9 a.m. to 5 p.m. on August 22.

The proposed agenda of the meeting includes formulating recommendations for reauthorization of the Higher Education Act in the areas of: (a) Simplification of need analysis and the delivery system and (b) information resources, services and programs. The Committee also will discuss other issues related to reauthorization as well as future Advisory Committee activities.

Records are kept of all Committee proceedings, and are available for public inspection at the Office of the Advisory Committee on Student Financial Assistance, Room 4600, 7th and D Streets, SW., Washington, DC from the hours of 9 a.m. to 5:30 p.m., weekdays, except Federal holidays.

Brian K. Fitzgerald,

Staff Director, Advisory Committee on Student Financial Assistance.

[FR Doc. 90-18231 Filed 8-3-90; 8:45 am]

BILLING CODE 4000-01-M

DEPARTMENT OF ENERGY

Financial Assistance Award, Intent to Award Grant to Dr. Joran Hopenfeld

AGENCY: Department of Energy.

ACTION: Notice of unsolicited assistance award.

SUMMARY: The Department of Energy announces that pursuant to 10 CFR 600.14, it is making a financial assistance award under Grant Number DE-FG01-90CE15495 to Dr. Joran Hopenfeld, to assist in the development of specifications for the design, installation and operation of systems to continously monitor pipe and vessel wall thinning due to erosion and corrosion in energy production facilities.

SCOPE: This grant will aid in providing funding in the amount of $84,720 for an invention that will reduce the probability of failures or detection of thinning of the pipes and vessel walls in pressurized systems while in service. The proposed project will permit the monitoring of many more points of potential failures in pipes and vessels than present methods, and at a lower cost. This invention also provides for continuous, automatic monitoring and it is expected that this invention should find a substantial and timely market in the power, oil, geothermal and chemical industries. Due to the considerable additional data this invention generates on a continous basis, the technology will help guard against catastrophic pipe and vessel ruptures.

Eligibility

Eligibility of this award is being limited to Dr. Joran Hopenfeld, the inventor, based on an acceptance of an unsolicited application. Dr. Hopenfeld has a PhD in nuclear engineering with considerable experience in the nuclear power field. The National Institute of Standards and Technology estimates the savings primarily from labor to remove and replace the insulation to be gained by the on-line monitoring of 400 elbows and 100 straight pipes would be about $1.7 million per plant over a period of 10 years. In accordance with 10 CFR 600.14(e)(1), it has been determined that this project represents a unique idea that is not eligible for financial assistance under a recent, current or planned solicitation. The funding program, Energy-Related Inventions Program (ERIP), has been structured since its beginning in 1975 to operate without competitive solicitations because the legislation directs ERIP to provide support for worthy ideas submitted by the public. The proposed project and technology have a strong potential of adding to the national energy resources.

The term of this grant shall be for sixteen (16) months from the effective date of award.

FOR FURTHER INFORMATION CONTACT: U.S. Department of Energy Office of Procurement Operations, ATTN: Rosemarie Marshall, PR-542, 1000 Independence Avenue, SW., Washington, DC 20585.

Thomas S. Keefe,

Director, Contract Operations Division "B", Office of Procurement Operations.

[FR Doc. 90-18311 Filed 8-3-90; 8:45 am]

BILLING CODE 6450-01-M

Senior Executive Service; Performance Review Board

ACTION: Amendmemt to the SES Performance Review Board Appointments.

SUMMARY: This notice lists the additional members to serve on the Performance Review Board standing register for the Department of Energy. This supplements the listings published in 52 FR 32165, on August 26, 1987, and 52 FR 34980, on September 16, 1987, as amended by our letter of August 10, 1988.

EFFECTIVE DATE: These appointments are effective as of July 31, 1990.

The additional names for the SES Performance Review Board are as follows:

Lea J. Uhre
Robert J. Franklin
Tony C. Upchurch
Ronald R. Loose
Steven D. Richardson
Raymond P. Berube
W. Calvin Kilgore
Iran L. Thomas
Lewis E. Temple, Jr.
John W. Bartholomew
Denise F. Swink
Richard H. Williamson
Larry A. Forsythe
Vito Stagliano
Earl W. Bean
Carleton D. Bingham
William R. Bibb
J. J. Keating
James Hirahara
Warren E. Bergholz
David G. Coleman
Thomas L. Weaver

Issued in Washington, DC on August 1, 1990.

Lea J. Uhre,

Executive Secretary, Executive Personnel Board.

[FR Doc. 90-18312 Filed 8-3-90; 8:45 am]

BILLING CODE 6450-01-M

Federal Energy Regulatory Commission

[Docket No. TM90-6-18-000]

Texas Gas Transmission Corp.; Tariff Filing

July 30, 1990.

Take notice that on July 25, 1990 Texas Gas Transmission Corporation (Texas Gas) tendered for filing the following revised tariff sheets to its FERC Gas Tariff, Original Volume No. 1:

Original Sheet No. 14L
Original Sheet No. 14M
Original Sheet No. 14N
Original Sheet No. 14O
Fourth Revised Sheet No. 126
First Revised Sheet No. 127

Texas Gas states that this filing is made to reflect the allocation to its jurisdictional sales customers of United Gas Pipe Line Company's (United) fixed take-or-pay charges in Docket No. RP90-132 originating from Sea Robin Pipe Line Company in Docket No. RP90-129. The filing is consistent with Order No. 500 which allows "downstream pipelines . . . to allocate the fixed take-or-pay charges of upstream pipelines on the

same basis as that upon which they are incurred, namely, cumulative purchase deficiencies." Texas Gas reserves the right to revise the filing as necessary to reflect any modifications made by the Commission or as required by any appellate court, and Texas Gas has requested any necessary waivers so that the filing takes effect August 1, 1990.

Texas Gas states that copies of this filing have been served upon Texas Gas' jurisdictional sales customers and interested state commissions.

Any person desiring to be heard or to protest said filing should file a petition to intervene or protest with the Federal Energy Regulatory Commission, 825 North Capitol Street NE., Washington, DC 20426, in accordance with Rules 2.11 and 2.14 of the Commission's Rules of Practice and Procedure (18 CFR 385.211 and 385.214). All such petitions or protests should be filed on or before August 6, 1990. Protests will be considered by the Commission in determining the appropriate action to be taken, but will not serve to make protestants parties to the proceeding. Any person wishing to become a party must file a petition to intervene. Copies of this filing are on file with the Commission and are available for public inspection.

Lois D. Cashell,

Secretary.

[FR Doc. 90–18210 Filed 8–3–90; 8:45 am]

BILLING CODE 6717–01–M

[Docket No. RP89–183–017]

Williams Natural Gas Co.; Compliance Filing

July 30, 1990.

Take notice that on July 20, 1990, Williams Natural Gas Company (WNG) tendered for filing the following tariff sheet to its FERC Gas Tariff, Original Volume No. 1:

Substitute Second Revised Sheet No. 47

WNG states that this sheet is being filed in compliance with the Commission's order dated June 8, 1990 in docket No. RP89–183–006.

WNG states the the June 8 order directed WNG to refile tariff sheet No. 47 to explain in the body of the tariff sheet the exact pagination of the various sheets to be superseded.

WNG states that copies of its filing were served on all jurisdictional customers and interested state commissions.

Any person desiring to protest said filing should file a protest with the Federal Energy Regulatory Commission, 825 North Capitol Street, NE., Washington, DC 20426, in accordance with rules 214 and 211 of the Commission's Rules of Practice and Procedure (18 CFR 385.214, 385.211 (1989). All such protests should be filed on or before August 6, 1990. Protests will be considered by the Commission in determining the appropriate action to be taken, but will not serve to make protestants parties to the proceeding. Persons that are already parties to this proceeding need not file a motion to intervene in this matter. Copies of this filing are on file with the Commission and are available for public inspection.

Lois D. Cashell,

Secretary.

[FR Doc. 90–18211 Filed 8–3–90; 8:45 am]

BILLING CODE 6717–01–M

[Docket No. RP90–2–005]

Williston Basin Interstate Pipeline Co., Change in FERC Gas Tariffs

July 30, 1990

Take notice that on July 26, 1990, Williston Basin Inter-state Pipeline Company (Williston Basin), Suite 200, 304 East Rosser Avenue, Bismarck, North Dakota 58501, tendered for filing certain revised tariff sheets to Original Volume No. 2 of its FERC Gas Tariff.

Williston Basin states that the tariff sheets were filed in compliance with the Commission's Order dated July 11, 1990 in the Instant docket.

Williston Basin states that copies of this filing were served on Williston Basin's jurisdictional customers and interested state regulatory agencies.

Any person desiring to protest said filing should file a protest with the Federal Energy Regulatory Commission, 825 North Capitol Street, NE., Washington, DC 20426, in accordance with rules 214 and 211 of the Commission's Rules of Practice and Procedure (18 CFR 385.214, 385.211 (1989). All such protests should be filed on or before August 6, 1990. Protests will be considered by the Commission in determining the appropriate action to be taken, but will not serve to make protestants parties to the proceeding. Persons that are already parties to this proceeding need not file a motion to intervene in this matter. Copies of this filing are on file with the Commission and are available for public inspection.

Lois D. Cashell,

Secretary.

[FR Doc. 90–18212 Filed 8–3–90; 8:45 am]

BILLING CODE 6717–01–M

[Docket No. RP90–133–001]

Williston Basin Interstate Pipeline Co., Change in FERC Gas Tariffs

July 30, 1990

Take notice that on July 26, 1990, Wiliston Basin Inter-state Pipeline Company (Williston Basin), Suite 200, 304 East Rosser Avenue, Bismarck, North Dakota 58501, tendered for filing certain revised tariff sheets to First Revised Volume No. 1, Original Volume No. 1–A, Original Volume No. 1–B and Original Volume No. 2 of its FERC Gas Tariff.

Williston Basin states that the tariff sheets were filed in compliance with the Commission's "Order Conditionally Accepting and Suspending Tariff Sheets and Rejecting Compliance Filing" issued July 11, 1990 in Docket Nos. RP90–133–000, and reflect rates to be effective July 12, 1990.

The Company also filed revised tariff sheets to reflect the elimination of Rate Schedules X–8 and X–12 from its FERC Gas Tariff pursuant to Orders issued May 10, 1990 and October 31 1989 in Docket Nos. CP90–194–000 and CP88–360–000, respectively.

Williston Basin states that copies of this filing were served on Williston Basin's jurisdictional customers and interested state regulatory agencies.

Any person desiring to protest said filing should file a protest with the Federal Energy Regulatory Commission, 825 North Capitol Street, NE., Washington, DC 20426, in accordance with rules 214 and 211 of the Commission's Rules of Practice and Procedure (18 CFR 385.214, 385.211 (1989). All such protests should be filed on or before August 6, 1990. Protests will be considered by the Commission in determining the appropriate action to be taken, but will not serve to make protestants parties to the proceeding. Persons that are already parties to this proceeding need not file a motion to intervene in this matter. Copies of this filing are on file with the Commission and are available for public inspection.

Lois D. Cashell,

Secretary.

[FR Doc. 90–18213 Filed 8–3–90; 8:45 am]

BILLING CODE 6717–01–M

Office of Conservation and Renewable Energy

[Solicitation Number DE-PSO1-90CE26598]

Announcement of Competitive Grant Program: District Cooling Engineering and Design Program

Purpose

This announcement revises, in its entirety, a previous **Federal Register** notice for the above solicitation, reference **Federal Register**/Vol. 55, No. 123, Tuesday, June 26, 1990.

The United States Department of Energy, (DOE) Office of Conservation and Renewable Energy, Office of Buildings and Community Systems announces the availability of funds for competitive financial assistance awards for District Cooling Engineering and Design Studies.

Background

DOE is interested in promoting the use of technology advanced and innovative district cooling systems in the United States where they could substantially increase the efficiency of building air conditioning supply, substitute renewable energy resources for the use of premium fuels, or both. Locations in which such opportunities exist will generally be characterized by high levels of demand, high costs for building air conditioning due to climate and building density, or both. District cooling system development is a multi-step process requiring feasibility assessment, system engineering and design, detailed development, and construction. For the purpose of the forthcoming solicitation, the DOE's primary focus will be directed at the engineering and design stage (Phase II) of the process. Realizing the energy conservation and fuel substitution benefits inherent in district cooling, the DOE recently supported ten communities under cost-shared arrangements in their efforts to assess the technical and economic feasibility of applying district cooling concepts to specific needs and energy resource availability.

This solicitation solicits Grant applications for the engineering and design stage of the district cooling systems process as a means of providing support to communities where technical and economic feasibility for district cooling has been established, and a commitment to proceed with detailed engineering and design, leading to construction is evidenced.

Up to 10 Grant awards are expected to be made in the late 1990 pursuant to this solicitation in a balanced program that meets DOE's identified interests. Up to $800,000 will be allotted for this program by DOE. It is anticipated that a formal solicitation will be issued on or about August 10, 1990. It is important that all proposed projects be for site-specific locations with high space cooling demands and costs, and have identified potential customers to interconnect with the proposed district cooling systems when implemented. The DOE share of costs for each Grant award shall not exceed 25% of the total estimated cost of the project. Funding may be utilized over a period of up to 12 months from the date of award, by which time the proposed work must be completed.

Eligibility

Any public or private entity may respond to this solicitation for the Phase II effort provided that the feasibility assessment (Phase I) stage has been previously completed (with or without previous Government support). Applications for Phase I feasibility studies will not be considered under this solicitation. Also, applications addressing generic engineering and design tool development for district heating and/or cooling systems, or engineering and design for district heating systems, will not be considered. Written requests for copies of this solicitation should be sent to:

U.S. Department of Energy, Office of Procurement Operations, Forrestal Building, room 1J-005, 1000 Independence Avenue, SW., Washington, DC 20585, Attn: Document Control Specialist, PR-521.

Scott Sheffield,

Acting Director, Contract Operations Division "B", Office of Procurement Operations.

[FR Doc. 90-18310 Filed 8-3-90; 8:45 am]

BILLING CODE 6450-01-M

Office of the Deputy Secretary

U.S. Alternative Fuels Council; Notice of Open Meeting

Pursuant to the provisions of the Federal Advisory Committee Act (Public Law 92-463, 86 Stat. 770), notice is hereby given of the following meeting:

Name: United States Alternative Fuels Council.

Date and Time: Thursday, August 16, 1990, 9 a.m.-3:30 p.m. Friday, August 17, 1990, 9 a.m.-4 p.m.

Location: Fairlane Center, 19000 Hubbard Drive, Dearborn, Michigan.

Contact: Mark Bower, Office of Policy, Planning and Analysis, U.S. Department of Energy, Mail Stop PE-50, Washington, DC 20585, Phone: (202) 586-3891.

Purpose of the Council: To provide advice to the Interagency Committee on Alternative Motor Fuels to help:

1. Coordinate Federal agency efforts to develop and implement a national alternative motor fuels policy.
2. Ensure the development of a long-term plan for the commercialization of alcohols, natural gas, and other potential alternative motor fuels.
3. Ensure communciation among representatives of all Federal agencies that are involved in alternative motor fuels projects or that have an interest in such projects.
4. Provide for the exchange of information among persons working with, or interested in working with, the commercialization of alternative motor fuels.

U.S. Alternative Fuels Council

Agenda Outline

August 16, 1990

9 a.m.-12 p.m. (with break)
Alternative Fuel Vehicle Technology.
Chair: Charles R. Imbrecht.

1 p.m.-3:30 p.m.
Panel Discussion on Reformulated Gasoline
Chair: Robert W. Hahn.

U.S. Alternative Fuels Council

Agenda Outline

August 17, 1990

9 a.m.-10:30 a.m.
Council Discussion on National Energy Security.
Chair: Robert W. Hahn.

10:45 a.m.-12:30 p.m.
Panel Discussion on Cost Effectiveness of Alternative Fuel Use To Improve Air Quality.
Chair: Robert W. Hahn

1:30 p.m.-2:30 p.m.
Council Discussion on Legislative History of the Council and Council Charter.
Chair: Charles R. Imbrecht.

2:30 p.m.-4 p.m.
Other Business.
Chair: Charles R. Imbrecht.

Public Participation: The meeting is open to the public. Written statements may be filed with the Council either before or after the meeting. Members of the public who wish to make oral statements pertaining to the agenda items should contact Mark Bower at the address or telephone number listed above. Requests must be received five days prior to the meeting and reasonable provisions will be made to include the presentation on the agenda. The Chairpersons of the Council are empowered to conduct the meeting in a fashion that will facilitate the orderly conduct of business.

Minutes: Available for public reveiw and copying approximately 30 days following the meeting at the Public Reading room, room 1E190, Forrestal Building, 1000 Independence Ave., SW., Washington, DC between 9 a.m. and 4 p.m., Monday through Friday, except Federal Holidays.

Issued at Washington, DC, on August 1, 1990.

J. Robert Franklin,

Deputy Advisory Committee Management Officer.

[FR Doc. 90–18315 Filed 8-3-90; 8:45 am]

BILLING CODE 6450-01-M

Office of Fossil Energy

[FE Docket No. 90–29–NG]

Victoria Gas Corp.; Order Granting Blanket Authorization To Import and Export Natural Gas From and to Canada and Mexico

AGENCY: Office of Fossil Energy, Department of Energy.

ACTION: Notice of an order granting blanket authorization to import and to export natural gas.

SUMMARY: The Office of Fossil Energy of the Department of Energy gives notice that it has issued an order granting Victoria Gas Corporation (Victoria) blanket authorization to import and export up to 100 Bcf of natural gas from and to Canada and Mexico, over a two-year term beginning on the date of first delivery of the import or export.

A copy of this order is available for inspection and copying in the Office of Fuels Programs Docket room, 3F–056, Forrestal Building, U.S. Department of Energy, 1000 Independence Avenue, SW., Washington, DC 20585, (202) 586–9478. The docket room is open between the hours of 8 a.m. and 4:30 p.m., Monday through Friday, except Federal holidays.

Issued in Washington, DC, July 30, 1990.

Clifford P. Tomaszewski,

Acting Deputy Assistant Secretary for Fuels Programs, Office of Fossil Energy.

[FR Doc. 90–18316 Filed 8–3–90; 8:45 am]

BILLING CODE 6450-01-M

[FE Docket No. 90–52–NG]

Granite State Gas Transmission, Inc.; Order Granting Blanket Authorization to Import Canadian Natural Gas

AGENCY: Office of Fossil Energy, Department of Energy.

ACTION: Notice of an order Granting Blanket Authorization to import Canadian natural gas.

SUMMARY: The Office of Fossil Energy (FE) of the Department of Energy gives notice that it has issued an order granting Granite State Gas Transmission, Inc., blanket authorization in FE Docket No. 90–52–NG to import up to 25 Bcf of Canadian natural gas over to two-year period beginning on the date of first delivery.

A copy of this order is available for inspection and copying in the Office of Fuels Programs Docket Room, 3F–056, Forrestal Building, U.S. Department of Energy, 1000 Independence Avenue, SW., Washington, DC 20585, (202) 586–9478. The docket room is open between the hours of 8 a.m. and 4:30 p.m., Monday through Friday except Federal holidays.

Issued in Washington, DC, July 31, 1990.

Clifford P. Tomaszewski,

Acting Deputy Assistant Secretary for Fuels Programs, Office of Fossil Energy.

[FR Doc. 90–18313 Filed 8–3–90; 8:45 am]

BILLING CODE 6450-01-M

[FE Docket No. 90–50–NG]

IGI Resources, Inc.; Order Granting Blanket Authorization To Import Natural Gas

AGENCY: Office of Fossil Energy, Department of Energy.

ACTION: Notice of an order granting blanket authorization to import natural gas.

SUMMARY: The Office of Fossil Energy of the Department of Energy gives notice that it has issued an order granting IGI Resources, Inc. (IGI) blanket authorization to import natural gas from Canada. The order issued in FE Docket No. 90–50–NG authorizes IGI to import up to 100 Bcf of natural gas for two years beginning on August 1, 1990, and ending July 31, 1992.

A copy of this order is available for inspection and copying in the Office of Fuels Programs Docket Room, 3F–056, Forrestal Building, U.S. Department of Energy, 1000 Independence Avenue, SW., Washington, DC 20585, (202) 586–9478. The docket room is open between the hours of 8 a.m. and 4:30 p.m., Monday through Friday, except Federal holidays.

Issued in Washington, DC, July 31, 1990.

Clifford P. Tomaszewski,

Acting Deputy Assistant Secretary for Fuels Programs, Office of Fossil Energy.

[FR Doc. 90–18314 Filed 8–3–90; 8:45 am]

BILLING CODE 6450-01-M

[FE Docket No. 90–47–NG]

San Diego Gas & Electric Co.; Application for Blanket Authorization to Import Natural Gas From Canada

AGENCY: Office of Fossil Energy, Department of Energy.

ACTION: Notice of application for blanket authorization to import natural gas from Canada.

SUMMARY: The Office of Fossil Energy (FE) of the Department of Energy (DOE) gives notice of receipt on May 15, 1990, of an application filed by San Diego Gas & Electric Company (SDG&E) requesting blanket authorization to import up to 100 MMcf per day of Canadian natural gas over a two-year period beginning on the date of first delivery. The proposed import would utilize the Pacific Gas Transmission Company (PGT)/Pacific Gas and Electric Company (PG&E) Expansion Project for which an application for a Certificate of Public Convenience and Necessity (CP89–460) has been filed and is pending at the Federal Energy Regulatory Commission. SDG&E agrees to make quarterly reports detailing each import transaction.

The application is filed under section 3 of the Natural Gas Act and DOE Delegation Order Nos. 0204–111 and 0204–127. Protests, motions to intervene, notices of intervention and written comments are invited.

DATES: Protests, motions to intervene or notices of intervention, as applicable, requests for additional procedures, and written comments are to be filed at the address listed below no later than 4:30 p.m., e.d.t., September 5, 1990.

ADDRESSES: Office of Fuels Programs, Fossil Energy, U.S. Department of Energy, Forrestal Building, room 3F–056, FE–50, 1000 Independence Avenue, SW., Washington, DC 20585.

FOR FURTHER INFORMATION CONTACT:

Frank Duchaine, Office of Fuels Programs, Fossil Energy, U.S. Department of Energy, Forrestal Building, room 3H–087, 1000 Independence Avenue, SW., Washington, DC 20585, (202) 586–8233.

Diane J. Stubbs, Natural Gas and Mineral Leasing, Office of General Counsel, U.S. Department of Energy, Forrestal Building, room 6E–042, 1000 Independence Avenue, SW., Washington, DC 20585, (202) 586–6667.

SUPPLEMENTARY INFORMATION: SDG&E, a California corporation, is engaged in the retail distribution of natural gas in the City and County of San Diego, California. In addition, SDG&E is engaged in the retail distribution of electricity and utilizes substantial

amounts of natural gas in its electric generation facilities.

SDG&E states that the requested authorization is needed in blanket form in order to allow them to import gas on their own behalf. According to SDG&E, the proposed import would be transported using: (1) The proposed PGT–PGE Expansion Project; (2) new and existing facilities in Canada belonging to NOVA Corporation, Foothills Pipelines, Ltd., and Alberta Natural Gas Company, and (3) local distribution company facilities in California. The point of import will be near Kingsgate, British Columbia.

SDG&E asserts that all of the transactions under the requested authorization will be voluntarily negotiated at arms length. Contract terms would be determined on the basis of competitive factors in the gas market and all transactions would be limited to terms of two years or less. In addition to this application for blanket authorization, SDG&E also contemplates the filing of one or more applications for authority to import natural gas from Canada pursuant to gas purchase agreements for periods in excess of two years. Such applications will be made promptly upon the final completion of such longer term agreements, currently under negotiation.

In support of its application, SDG&E asserts that the proposed gas imports would be competitive and SDG&E will not purchase the gas to import unless it has a need for the gas. Also, SDG&E maintains that the requested authorization would enhance throughput on U.S. pipelines and will serve the public interest by improving the availability of competitive gas supplies to meet SDG&E's large demand of gas. In addition, Canada is a long-term and reliable supply source.

The decision on the application for import authority will be made consistent with the DOE's gas import policy guidelines, under which the competitiveness of an import arrangement in the markets served is the primary consideration in determining whether it is in the public interest (49 FR 6684, February 22, 1984). Parties, especially those that may oppose this application, should comment in their response on these matters as they relate to the requested import authority. The applicant asserts that this import arrangement will be competitive and in the public interest. Parties opposing the arrangement bear the burden of overcoming this assertion.

NEPA Compliance

The National Environmental Policy Act (NEPA), 42 U.S.C. 4321 *et seq.*, requires the DOE to give appropriate consideration to the environmental effects of its proposed actions. No final decision will be issued in this proceeding until the DOE has met its NEPA responsibilities.

Public Comment Procedures

In response to this notice, any person may file a protest, motion to intervene or notice of intervention, as applicable, and written comments. Any person wishing to become a party to the proceeding and to have the written comments considered as the basis for any decision on the application must, however, file a motion to intervene or notice of intervention, as applicable. The filing of a protest with respect to this application will not serve to make the protestant a party to the proceeding, although protests and comments received from persons who are not parties will be considered in determining the appropriate action to be taken on the application. All protests, motions to intervene, notices of intervention, and written comments must meet the requirements that are specified by the regulations in 10 CFR part 590.

Protests, motions to intervene, notices of intervention, requests for additional procedures, and written comments should be filed with the Office of Fuels Programs at the above address.

It is intended that a decisional record will be developed on the application through responses to this notice by parties, including the parties' written comments and replies thereto. Additional procedures will be used as necessary to achieve a complete understanding of the facts and issues. A party seeking intervention may request that additional procedures be provided, such as additional written comments, an oral presentation, a conference, or trial-type hearing. Any request to file additional written comments should explain why they are necessary. Any request for an oral presentation should identify the substantial question of fact, law, or policy at issue, show that it is material and relevant to a decision in the proceeding, and demonstrate why an oral presentation is needed. Any request for a conference should demonstrate why the conference would materially advance the proceeding. Any request for a trial-type hearing must show that there are factual issues genuinely in dispute that are relevant and material to a decision and that a trial-type hearing is necessary for a full and true disclosure of the facts.

If an additional procedure is scheduled, notice to all parties will be provided. If no party requests additional procedures, a final opinion and order may be issued based on the official record, including the application and responses filed by parties pursuant to this notice, in accordance with 10 CFR 590.316.

A copy of SDG&E's application is available for inspection and copying in the Office of Fuels Programs, Docket Room 3F–056, at the above address, (202) 586–9478. The docket room is open between the hours of 8 a.m. and 4:30 p.m., Monday through Friday, except Federal holidays.

Issued in Washington, DC, July 27, 1990.

Clifford P. Tomaszewski,

Acting Deputy Assistant Secretary for Fuels Programs, Office of Fossil Energy.

[FR Doc. 90–18317 Filed 8–3–90; 8:45 am]

BILLING CODE 6450–01–M

[FE Docket No. 90–48–NG]

The Washington Water Power Co.; Application for Blanket Authorization to Import Natural Gas From Canada

AGENCY: Department of Energy.

ACTION: Notice of application for blanket authorization to import natural gas from Canada.

SUMMARY: The Office of Fossil Energy (FE) of the Department of Energy (DOE) gives notice of receipt on May 15, 1990, of an application filed by The Washington Water Power Company (WWP) requesting blanket authorization to import up to 30 Bcf of Canadian natural gas over a two-year period beginning on the date of first delivery. The proposed import would utilize the Pacific Gas Transmission Company (PGT)/Pacific Gas and Electric Company (PG&E) Expansion Project for which an application for a Certificate of Public Convenience and Necessity (CP89–460) has been filed and is pending at the Federal Energy Regulatory Commission. WWP agrees to make quarterly reports detailing each import transaction.

The application is filed under section 3 of the Natural Gas Act and DOE Delegation Order Nos. 0204–111 and 0204–127. Protests, motions to intervene, notices of intervention and written comments are invited.

DATES: Protests, motions to intervene or notices of intervention, as applicable, requests for additional procedures, and written comments are to be filed at the address listed below no later than 4:30 p.m., e.d.t., September 5, 1990.

ADDRESSES: Office of Fuels Programs, Fossil Energy, U.S. Department of Energy, Forrestal Building, room 3F–056,

FE–50, 1000 Independence Avenue, SW., Washington, DC 20585.

FOR FURTHER INFORMATION CONTACT:

Frank Duchaine, Office of Fuels Programs, Fossil Energy, U.S. Department of Energy, Forrestal Building, room 3H–087, 1000 Independence Avenue, SW., Washington, DC 20585 (202) 586–8233.

Diane Stubbs, Natural Gas and Mineral Leasing, Office of General Counsel, U.S. Department of Energy, Forrestal Building, room 6E–042, 1000 Independence Avenue, SW., Washington, DC 20585 (202) 586–6667.

SUPPLEMENTARY INFORMATION: WWP, a State of Washington corporation with its principal place of business in Spokane, Washington, is a combination electric and gas distribution utility. WWP is engaged in the business of generating, transmitting, and distributing electric energy in the States of Washington and Idaho.

WWP states that the requested authorization is needed in blanket form in order to allow WWP to import gas on its own behalf. According to WWP, the proposed import would be transported using: (1) The proposed PGT–PGE Expansion Project; (2) new and existing facilities in Canada belonging to NOVA Corporation, Foothills Pipelines, Ltd., and Alberta Natural Gas Company. The point of import will be near Kingsgate, British Columbia.

WWP asserts that all of the transactions under the requested authorization will be conducted pursuant to market-responsive contract terms. In addition to this application for blanket authorization, WWP also contemplates the filing of one or more applications for authority to import natural gas from Canada pursuant to gas purchase agreements for periods in excess of two years. Such applications will be make promptly upon the final completion of such longer term agreements, currently under negotiation.

In support is its application, WWP asserts that the proposed gas imports would be limited to a term of two years and that Canada is a long-term and reliable supply source. In addition, WWP states that the contemplated import transactions will be competitive because they will be voluntarily negotiated at arms length and transaction terms, including sales prices, will be determined on the basis of competitive factors in the gas market. For this reason, WWP submits it is entitled to a presumption of need. Also, WWP maintains that the requested authorization would enhance throughput on U.S. pipelines and will serve the public interest by improving the availability of competitive gas supplies to meet WWP's large demand of gas.

The decision on the application for import authority will be made consistent with the DOE's gas import policy guidelines, under which the competitiveness of an import arrangement in the markets served is the primary consideration in determining whether it is in the public interest (49 FR 6684, February 22, 1984). Parties, especially those that may oppose this application, should comment in their responses on these matters as they relate to the requested import authority. The applicant asserts that this import arrangement will be competitive and in the public interest. Parties opposing the arrangement bear the burden of overcoming this assertion.

NEPA Compliance

The National Environmental Policy Act (NEPA), 42 U.S.C. 4321 *et seq.*, requires the DOE to give appropriate consideration to the environmental effects of its proposed actions. No final decision will be issued in this proceeding until the DOE has met its NEPA responsibilities.

Public Comment Procedures

In response to this notice, any person may file a protest, motion to intervene or notice of intervention, as applicable, and written comments. Any person wishing to become a party to the proceeding and to have the written coments considered as the basis for any decision on the application must, however, file a motion to intervene or notice of intervention, as applicable. The filing of a protest with respect to this application will not serve to make the protestant a party to the proceeding, although protests and comments received from persons who are not parties will be considered in determining the appropriate action to be taken on the application. All protests, motions to intervene, notices of intervention, and written comments must meet the requirements that are specified by the regulations of 10 CFR part 590.

Protests, motions to intervene, notice of intervention, requests for additional procedures, and written comments should be filed with the Office of Fuels Programs at the above address.

It is intended that a decisional record will be developed on the application through responses to this notice by parties, including the parties' written comments and replies thereto. Additional procedures will be used as necessary to achieve a complete understanding of the facts and issues. A party seeking intervention may request that additional procedures be provided, such as additional written comments, an oral presentation, a conference, or trial-type hearing. Any request to file additional written comments should explain why they are necessary. Any request for an oral presentation should identify the substantial question of fact, law, or policy at issue, show that it is material and relevant to a decision in the proceeding, and demonstrate why an oral presentation is needed. Any request for a conference should demonstrate why the conference would materially advance the proceeding. Any request for a trial-type hearing must show that there are factual issues genuinely in dispute that are relevant and material to a deicision and that a trial-type hearing is necessary for a full and true disclosure of facts.

If an additional procedure is scheduled, notice to all parties will be provided. If no party requests additional procedures, a final opinion and order may be issued based on the official record, including the application and responses filed by parties pursuant to this notice, in accordance with 10 CFR 590.316.

A copy of WWP's application is available for inspection and copying in the Office of Fuels Programs Docket Room, 3F–056, at the above address, (202) 586–9478. The docket room is open between the hours of 8 a.m. and 4:30 p.m., Monday through Friday, except Federal holidays.

Issued in Washington, DC, July 27, 1990.

Clifford P. Tomaszewski,

Acting Deputy Assistant Secretary for Fuels Programs, Office of Fossil Energy.

[FR Doc. 90–18318 Filed 8–3–90; 8:45 am]

BILLING CODE 6450–01–M

ENVIRONMENTAL PROTECTION AGENCY

[OPTS–62093; FRL–3794–6]

Asbestos; Public Meeting

AGENCY: Environmental Protection Agency (EPA).

ACTION: Notice of public meeting.

SUMMARY: EPA will hold a public meeting to obtain input from interested individuals on the problems and potential governmental and private sector solutions related to asbestos in public and commercial buildings.

DATES: The meeting will be held on Tuesday, August 28, 1990, in Denver, Colorado from 1 p.m. to 4:30 p.m.

ADDRESSES: This meeting will be held in Denver, CO at the Westin Hotel, Tabor

Center, 1672 Lawrence St., Denver, CO 80202, (303) 572–9100.

FOR FURTHER INFORMATION CONTACT: Michael M. Stahl, Director, Environmental Assistance Division (TS–799), Office of Toxic Substances, Environmental Protection Agency, Rm. EB–45, 401 M St., SW., Washington, DC 20460, (202) 382–3949, TDD: (202) 554–0551.

SUPPLEMENTARY INFORMATION:

I. Background

On May 3, 1989, EPA held a public meeting in Washington, DC to obtain input from affected interests on the problems and potential governmental and private sector solutions related to asbestos in public and commercial buildings. At this meeting, which was attended by approximately 180 people, there was general agreement that further discussions among affected interests would be productive. In particular, there seemed to be four major issue areas that the participants believed should be the focus of subsequent discussions: inspection and notification, asbestos management (what one does once asbestos is identified), improper removals, and accreditation and training.

Based on the results of the May 3 meeting, EPA asked The Conservation Foundation (CF) to interview representatives of affected interests and to incorporate their suggestions into a process for public involvement on issues related to asbestos in public and commercial buildings. After conducting over 75 interviews, CF recommended that EPA and other affected interests proceed with a focused policy dialogue as well as a larger process of public involvement on these issues.

On July 17, 1989, in Washington, DC, with the assistance of CF's team of facilitators, EPA convened a group of 36 individuals representing the diversity of interests affected by asbestos in public and commercial buildings. These individuals represented realty interests, lender and insurer interests, unions, asbestos manufacturers, a public interest group, asbestos contractors and consultants, and various Federal, State, and local organizations responsible for the development and implementation of asbestos policies.

In addition to the July 17 meeting, the policy dialogue group met on July 27–28, August 22–23, and October 3–4 in 1989. In 1990, the group met on January 30–31 and, for the final time, on April 5. All of these meetings were held in Washington, DC. While public comment was welcomed at the above dialogue group meetings, EPA also held two additional public meetings in Kansas City and San Francisco on September 6 and September 7, 1989, respectively, to gain broader public involvement in the dialogue on asbestos in public and commercial buildings.

On June 15, 1990, CF submitted to EPA a final report which summarizes the results of the policy dialogue on asbestos in public and commercial buildings. The CF report summarizes the points of agreement and disagreement on the major conceptual issues that were discussed during the policy dialogue. These issues center around the following:

1. Characterization of the problem (i.e., who is at significant risk and how can that risk be addressed?).
2. Appropriateness and potential scope of any Federal response.

The CF report also summarizes the points of agreement and disagreement on the major policy issues discussed during the dialogue. These issues include the following:

1. EPA versus OSHA regulatory role.
2. Building investigation.
3. Notification.
4. Guidance.
5. Risk communication.
6. Use of air monitoring.
7. Removals.
8. Accreditation and training.
9. Use of OSHA standards.
10. Suspect materials.
11. Government buildings.
12. Liability amendments to the National Emission Standard for Hazardous Pollutants (NESHAP) and the Comprehensive Environmental Response, Compensation, and Liability Act (CERCLA).
13. NESHAP inspection and reporting amendments.

Individuals may obtain a copy of the June 15, 1990 CF report (as well as summaries of earlier dialogue meetings) by calling the TSCA Assistance Hotline at (202) 554–1404.

The purpose of the public meeting announced in this notice is to obtain comments from interested individuals on the major conceptual and policy issues discussed in the dialogue process and summarized in CF's final report.

II. Participation and Agenda

Interested individuals and groups are invited to attend and to participate in the public meeting. Aside from some brief opening remarks by a CF facilitator on the dialogue process and by EPA officials on the follow-up to the dialogue, the agenda of the meeting will consist primarily of a focused discussion among those in attendance on the major conceptual and policy issues outlined in unit I.

Dated: July 27, 1990.

Joseph A. Carra,

Acting Director, Office of Toxic Substances.

[FR Doc. 90–18307 Filed 8–3–90; 8:45 am]

BILLING CODE 6560–50–F

[FRL–3817–2]

Proposed Administrative Settlement; Presque Isle Chemical Site, PA

AGENCY: Environmental Protection Agency.

ACTION: Notice; request for public comment.

SUMMARY: In accordance with section 122(i) of the Comprehensive Environmental Response, Compensation and Liability Act, as amended by the Superfund Amendments and Reauthorization Act ("CERCLA"), notice is hereby given that a proposed administrative cost recovery settlement concerning the Presque Isle Chemical Site in Erie County, Pennsylvania was issued by the Agency on June 26, 1990. The settlement resolves and EPA claim under section 107 of CERCLA against the First National Bank of Pennsylvania. The settlement requires the settling party to pay $103,833.00 to the Hazardous Substances Superfund.

For thirty (30) days following the date of publication of this notice, the Agency will receive written comments relating to the settlement. The Agency's response to any comments received will be available for public inspection at the U.S. Environmental Protection Agency, Region III, Regional Docket Clerk, (3RC00), 841 Chestnut Building, Philadelphia, PA, 19107.

DATES: Comments must be submitted on or before September 5, 1990.

ADDRESSES: The proposed settlement and additional background information relating to the settlement are available for public inspection at U.S. EPA Region III, 841 Chestnut Building, Philadelphia, PA, 19107. A copy of the proposed settlement may be obtained from Suzanne Canning, U.S. EPA Region III Docket Clerk (3RC00), U.S. EPA, Region III, 841 Chestnut Building, Philadelphia, PA, 19107. Comments should reference the Presque Isle Chemical Site, Erie County, Pennsylvania and EPA Docket No. III–90–17–DC and should be addressed to Suzanne Canning, U.S. EPA Region III Docket Clerk, at the above address.

FOR FURTHER INFORMATION CONTACT: David Garrison, Assistant Regional Counsel, U.S. EPA, Region III, 841 Chestnut Building, Philadelphia, PA 19107, Telephone: (215) 597–9954.

Dated: July 23, 1990.

Edwin B. Erickson,

Regional Administrator, United States Environmental Protection Agency, Region III.

[FR Doc. 90-18305 Filed 8-3-90; 8:45 am]

BILLING CODE 6560-50-M

[OPTS-59286; FRL 3796-1]

Toxic and Hazardous Substances; Certain Chemicals Premanufacture Notices; Test Market Exemption Applications

AGENCY: Environmental Protection Agency (EPA).

ACTION: Notice.

SUMMARY: EPA may upon application exempt any person from the premanufacturing notification requirements of section 5(a) or (b) of the Toxic Substance Control Act (TSCA) to permit the person to manufacture or process a chemical for test marketing purposes under section 5(h)(1) of TSCA. Requirements for test marketing exemption (TME) applications, which must either be approved or denied within 45 days of receipt are discussed in EPA's final rule published in the **Federal Register** of May 13, 1983 (48 FR 21722). This notice, issued under section 5(h)(6) of TSCA, announces receipt of two application(s) for exemption, provides a summary, and requests comments on the appropriateness of granting this exemption.

DATES:

Written comments by:

T 90-16, 90-17, August 23, 1990.

ADDRESSES: Written comments, identified by the document control number "(OPTS-59284)" and the specific TME number should be sent to: Document Processing Center (TS-790), Office of Toxic Substances, Environmental Protection Agency, 401 M Street, SW., Room L-100, Washington, DC 20460, (202) 382-3532.

FOR FURTHER INFORMATION CONTACT: Michael M. Stahl, Director, Environmental Assistance Office (TS-799), Office of Toxic Substances, Environmental Protection Agency, Room E-545, 401 M Street, SW., Washington, DC 20460, (202) 554-1404, TDD (202) 554-0551.

SUPPLEMENTARY INFORMATION: The following notice contains information extracted from the nonconfidential version of the submission provided by the manufacturer of the TME received by EPA. The complete nonconfidential document is available in the Public Reading Room NE-G004 at the above address between 8:00 a.m. and 4:00 p.m., Monday through Friday, excluding legal holidays.

T 90-16

Close of Review Period. September 6, 1990.

Manufacturer. Confidential.

Chemical. (G) Bis(hexamethylene)tris-dimethiocarbamic acid.

Use/Production. (G) Sulfur solvent for natural gas production. Prod. range: Confidential.

T 90-17

Close of Review Period. September 6, 1990.

Manufacturer. Confidential.

Chemical. (G) Amine dithiocarbamate.

Use/Production. (G) Removal of dissolved oxygen from cold water used in oil and gas production. Prod. range: Confidential.

Dated: July 31, 1990.

Steve Newburg-Rinn,

Acting Director, Information Management Division, Office of Toxic Substances.

[FR Doc. 90-18308 Filed 8-3-90; 8:45 am]

BILLING CODE 6560-50-F

[OPTS-51751; FRL 3794-1]

Toxic and Hazardous Substances; Certain Chemicals Premanufacture Notices

AGENCY: Environmental Protection Agency (EPA).

ACTION: Notice.

SUMMARY: Section 5(a)(1) of the Toxic Substances Control Act (TSCA) requires any person who intends to manufacture or import a new chemical substance to submit a premanufacture notice (PMN) to EPA at least 90 days before manufacture or import commences. Statutory requirements for section 5(a)(1) premanufacture notices are discussed in the final rule published in the **Federal Register** of May 13, 1983 (48 FR 21722). This notice announces receipt of 196 such PMNs and provides a summary of each.

DATES: Close of Review Periods:

P 90-1344, August 6, 1990.

P 90-1345, 90-1346, 90-1347, 90-1348, 90-1349, 90-1350, August 7, 1990.

P 90-1351, 90-1352, 90-1353, 90-1354, 90-1355, 90-1356, 90-1357, August 8, 1990.

P 90-1358, 90-1359, 90-1360, 90-1361, August 11, 1990.

P 90-1362, 90-1363, 90-1364, 90-1365, 90-1366, 90-1367, 90-1368, 90-1369, 90-1370, August 12, 1990.

P 90-1371, 90-1372, 90-1373, 90-1374, August 13, 1990.

P 90-1375, 90-1376, July 28, 1990.

P 90-1377, 90-1378, August 13, 1990.

P 90-1379, 90-1380, 90-1381, August 14, 1990.

P 90-1382, 90-1383, 90-1384, 90-1385, August 15, 1990.

P 90-1387, 90-1388, 90-1389, August 18, 1990.

P 90-1391, 90-1392, August 19, 1990.

P 90-1393, August 20, 1990.

P 90-1394, 90-1395, 90-1396, August 21, 1990.

P 90-1397, 90-1398, 90-1399, 90-1400, 90-1401, August 22, 1990.

P 90-1402, 90-1403, August 27, 1990.

P 90-1404, September 3, 1990.

P 90-1405, 90-1406, 90-1407, 90-1408, 90-1409, 90-1411, August 27, 1990.

P 90-1413, 90-1414, 90-1415, August 28, 1990.

P 90-1416, 90-1417, 90-1418, 90-1419, 90-1420, 90-1421, 90-1422, 90-1423, August 29, 1990.

P 90-1424, 90-1426, 90-1427, 90-1428, 90-1429, 90-1430, 90-1431, 90-1432, 90-1433, 90-1434, 90-1435, 90-1436, 90-1437, 90-1438, 90-1439, 90-1440, 90-1441, 90-1442, 90-1443, 90-1445, 90-1446, 90-1447, 90-1448, 90-1449, 90-1450, 90-1451, 90-1452, 90-1453, 90-1454, September 1, 1990.

P 90-1455, 90-1456, 90-1457, 90-1458, 90-1459, September 2, 1990.

P 90-1460, 90-1461, 90-1462, September 3, 1990.

P 90-1463, 90-1464, 90-1465, September 4, 1990.

P 90-1466, 90-1467, 90-1468, 90-1469, 90-1470, 90-1471, September 5, 1990.

P 90-1472, 90-1473, 90-1474, 90-1475, 90-1476, 90-1477, September 8, 1990.

P 90-1478, 90-1479, 90-1480, 90-1481, September 9, 1990.

P 90-1482, 90-1483, 90-1484, 90-1485, 90-1486, September 10, 1990.

P 90-1487, 90-1488, 90-1489, 90-1490, 90-1491, 90-1492, 90-1493, 90-1494, 90-1495, 90-1496, 90-1497, 90-1498, 90-1499, 90-1500, 90-1501, 90-1502, September 11, 1990.

P 90-1503, September 16, 1990.

P 90-1504, 90-1505, 90-1506, 90-1507, September 11, 1990.

P 90-1508, 90-1509, 90-1510, September 12, 1990.

P 90-1511, September 17, 1990.

P 90-1512, 90-1513, 90-1514, 90-1515, 90-1516, 90-1517, 90-1518, 90-1519, 90-1520, 90-1521, 90-1522, 90-1523, 90-1524, September 12, 1990.

P 90-1525, 90-1526, 90-1527, 90-1528, 90-1529, 90-1530, 90-1531, 90-1532, 90-1533, 90-1534, 90-1535, 90-1536, September 15, 1990.

P 90-1537, September 16, 1990.

P 90-1538, September 15, 1990.

P 90–1539, 90–1540, September 16, 1990.

P 90–1541, 90–1542, 90–1543, 90–1544, 90–1545, September 17, 1990.

Written comments by:

P 90–1344, July 7, 1990.

P 90–1345, 90–1346, 90–1347, 90–1348, 90–1349, 90–1350, July 8, 1990.

P 90–1351, 90–1352, 90–1353, 90–1354, 90–1355, 90–1356, 90–1357, July 9, 1990.

P 90–1358, 90–1359, 90–1360, 90–1361, July 12, 1990.

P 90–1362, 90–1363, 90–1364, 90–1365, 90–1366, 90–1367, 90–1368, 90–1369, 90–1370, July 13, 1990.

P 90–1371, 90–1372, 90–1373, 90–1374, July 14, 1990.

P 90–1375, 90–1376, June 28, 1990.

P 90–1377, 90–1378, July 14, 1990.

P 90–1379, 90–1380, 90–1381, July 15, 1990.

P 90–1382, 90–1383, 90–1384, 90–1385, July 16, 1990.

P 90–1387, 90–1388, 90–1389, July 19, 1990.

P 90–1391, 90–1392, July 20, 1990.

P 90–1393, July 21, 1990.

P 90–1394, 90–1395, 90–1396, July 22, 1990.

P 90–1397, 90–1398, 90–1399, 90–1400, 90–1401, July 23, 1990.

P 90–1402, 90–1403, July 28, 1990.

P 90–1404, August 4, 1990.

P 90–1405, 90–1406, 90–1407, 90–1408, 90–1409, 90–1411, July 28, 1990.

P 90–1413, 90–1414, 90–1415, July 29, 1990.

P 90–1416, 90–1417, 90–1418, 90–1419, 90–1420, 90–1421, 90–1422, 90–1423, July 30, 1990.

P 90–1424, 90–1426, 90–1427, 90–1428, 90–1429, 90–1430, 90–1431, 90–1432, 90–1433, 90–1434, 90–1435, 90–1436, 90–1437, 90–1438, 90–1439, 90–1440, 90–1441, 90–1442, 90–1443, 90–1445, 90–1446, 90–1447, 90–1448, 90–1449, 90–1450, 90–1451, 90–1452, 90–1453, 90–1454, August 2, 1990.

P 90–1455, 90–1456, 90–1457, 90–1458, 90–1459, August 3, 1990.

P 90–1460, 90–1461, 90–1462, August 4, 1990.

P 90–1463, 90–1464, 90–1465, August 5, 1990.

P 90–1466, 90–1467, 90–1468, 90–1469, 90–1470, 90–1471, August 6, 1990.

P 90–1472, 90–1473, 90–1474, 90–1475, 90–1476, 90–1477, August 9, 1990.

P 90–1478, 90–1479, 90–1480, 90–1481, August 10, 1990.

P 90–1482, 90–1483, 90–1484, 90–1485, 90–1486, August 11, 1990.

P 90–1487, 90–1488, 90–1489, 90–1490, 90–1491, 90–1492, 90–1493, 90–1494, 90–1495, 90–1496, 90–1497, 90–1498, 90–1499, 90–1500, 90–1501, 90–1502, August 12, 1990.

P 90–1503, August 17, 1990.

P 90–1504, 90–1505, 90–1506, 90–1507, August 12, 1990.

P 90–1508, 90–1509, 90–1510, August 13, 1990.

P 90–1511, August 18, 1990.

P 90–1512, 90–1513, 90–1514, 90–1515, 90–1516, 90–1517, 90–1518, 90–1519, 90–1520, 90–1521, 90–1522, 90–1523, 90–1524, August 13, 1990.

P 90–1525, 90–1526, 90–1527, 90–1528, 90–1529, 90–1530, 90–1531, 90–1532, 90–1533, 90–1534, 90–1535, 90–1536, August 16, 1990.

P 90–1537, August 17, 1990.

P 90–1538, August 16, 1990.

P 90–1539, 90–1540, August 17, 1990.

P 90–1541, 90–1542, 90–1543, 90–1544, 90–1545, August 18, 1990.

ADDRESS: Written comments, identified by the document control number "(OPTS–51751)" and the specific PMN number should be sent to: Document Processing Center (TS–790), Office of Toxic Substances, Environmental Protection Agency, 401 M Street, SW., Room L–100, Washington, DC, 20460, (202) 382–3532.

FOR FURTHER INFORMATION CONTACT: Michael M. Stahl, Director, Environmental Assistance Division (TS–799), Office of Toxic Substances, Environmental Protection Agency, Room EB–44, 401 M Street, SW., Washington, DC 20460 (202) 554–1404, TDD (202) 554–0551.

SUPPLEMENTARY INFORMATION: The following notice contains information extracted from the nonconfidential version of the submission provided by the manufacturer on the PMNs received by EPA. The complete nonconfidential document is available in the Public Reading Room NE–G004 at the above address between 8:00 a.m. and 4:00 p.m., Monday through Friday, excluding legal holidays.

P 90–1344

Manufacturer. Confidential.

Chemical. (G) Modified soya alkyd.

Use/Production. (G) Open, nondispersive use. Prod. range: Confidential.

P 90–1345

Manufacturer. Confidential.

Chemical. (G) Sulfinyl bis-dialkylated phosphorodithioate.

Use/Production. (G) Grease additive. Prod. range: Confidential.

Toxicity Data. Acute oral toxicity: LD50 > 5 g/kg species (Rat). Acute dermal toxicity: LD50 > 2 g/kg species (Rabbit). Eye irritation: none species (Rabbit). Mutagenicity: negative. Skin irritation: moderate species (Rabbit).

P 90–1346

Manufacturer. Freeman Chemicals Corporation.

Chemical. (G) Saturated polyester polyol.

Use/Production. (S) Polyester for baking application on metal office furniture. Prod. range: 193,000–386,000 kg/yr.

P 90–1347

Manufacturer. Confidential.

Chemical. (G) Heterocyclic alkyl phenols.

Use/Production. (G) Fuel additive for destructive use. Prod. range: Confidential.

P 90–1348

Manufacturer. Confidential.

Chemical. (G) Mixed *N*-substituted hexahydrotriazines.

Use/Production. (G) Fuel additive for destructive use. Prod. range: Confidential.

P 90–1349

Manufacturer. Confidential.

Chemical. (G) Alkylimine.

Use/Production. (G) Fuel additive for destructive use. Prod. range: Confidential.

P 90–1350

Manufacturer. Confidential.

Chemical. (S) Polymer of (alkyl) benzene carboxylic acid, (alkylene ether) glycol, triamino-s-thiazine and an (alkyl) cyclohexane-methenamine.

Use/Production. (S) Fluorescent pigment. Prod. range: 136,400–455,000 kg/yr.

P 90–1351

Manufacturer. Confidential.

Chemical. (G) Acrylic modified linseed oil polymer.

Use/Production. (S) Binder for automotive finishes (refinishes market). Prod. range: Confidential.

P 90–1352

Importer. Confidential.

Chemical. (G) Modified silicone resin.

Use/Import. (S) Polymerization initiator. Import range: Confidential.

P 90–1353

Manufacturer. Confidential.

Chemical. (G) Terepene hydrocarbon mono(maleic anhydride)adduct.

Use/Production. (S) Curing agent for epoxy resins in glass cloth laminated for printed circuit boards. Prod. range: Confidential.

P 90–1354

Manufacturer. Confidential.

Chemical. (G) Aliphatic urethane alkyd polymer.

Use/Production. (S) Air-dry varnishes for interior and exterior wood surfaces. Prod. range: Confidential.

P 90-1355

Manufacturer. Confidential.

Chemical. (G) Sunflower alkyd resin.

Use/Production. (S) High solids architectural finishes. Prod. range: Confidential.

P 90-1356

Manufacturer. Confidential.

Chemical. (G) Mannich base polyamine.

Use/Production. (S) Two component laminating system. Prod. range: Confidential.

Toxicity Data. Acute oral toxicity: LD50 1,899 mg/kg species (Rat). Acute dermal toxicity: LD50 > 2,000 mg/kg species (Rabbit).

P 90-1357

Manufacturer. Huls America Inc.

Chemical. (G) Glycol momobrenzoate.

Use/Production. (S) Plasticier component for flexible polyvinyl chloride compositions used in flooring products. Prod. range: Confidential.

P 90-1358

Manufacturer. Confidential.

Chemical. (S) Cyclohexanecarbonitrile, 1,3,3-timethyl-5-oxo-.

Use/Production. (G) Chemical intermediate. Prod. range: Confidential.

Toxicity Data. Acute oral toxicity: LD50 61.6 mg/kg species (Rat). Skin irritation: negligible species (Rabbit).

P 90-1359

Manufacturer. Products Research & Chemical Corporation.

Chemical. (S) Polymer of 1,3-propane diol, 2-ethyl-2-(hydroxymethyl) polymer with 1-[2 hydroxyethyl] thiol-2-propanol and 2-2-thio bis [ethanol] silane, triethoxy, 3-isocyanatopropyl.

Use/Production. (S) Polymer for adhesive promotion, coatings and for sealant. Prod. range: Confidential.

P 90-1360

Importer. Autotype U.S.A.

Chemical. (S) Polyvinyl alcohol with residual acetate groups 3,4-dimethyl-2-[2-4-formylphenyl] thiazolium methane sulphate.

Use/Import. (G) Screen printing chemical. Import range: Confidential.

Toxicity Data. Acute oral toxicity: LD50 > 5.0 g/kg species (Rat). Acute dermal toxicity: LD50 > 2.0 g/kg species (Rabbit). Eye irritation: slight species (Rabbit). Mutagenicity: negative. Skin irritation: slight species (Rabbit).

P 90-1361

Importer. Autotype U.S.A.

Chemical. (S) Polyvinyl alcohol with residual acetate groups 4-(2,2-diethoxy ethoxy) styryl-3-ethyl-4-methyls, thiazolium ethano sulphate.

Use/Import. (G) Screen printing chemical. Import range: Confidential.

Toxicity Data. Acute oral toxicity: LD50 > 5.0 g/kg species (Rat). Acute dermal toxicity: LD50 > 2.0 g/kg species (Rabbit). Eye irritation: slight species (Rabbit). Mutagenicity: negative. Skin irritation: slight species (Rabbit).

P 90-1362

Manufacturer. Confidential.

Chemical. (G) Polyester.

Use/Production. (S) Site-limited, intermediate. Prod. range: 21,000–360,000 kg/yr.

P 90-1363

Manufacturer. Confidential.

Chemical. (G) Blocked polyisocyanate.

Use/Production. (S) Anti-chip primer/surface for automotive OEM applications. Prod. range: 36,000–632,727 kg/yr.

P 90-1364

Manufacturer. Confidential.

Chemical. (G) Fatty acid amine-organic salt.

Use/Production. (G) Corrosion inhibitor. Prod. range: Confidential.

P 90-1365

Manufacturer. Confidential.

Chemical. (S) Polymer of: Trimelatic anhydride, diethylene glycol, phthalic anhydride, dimethylol propionic acid, iso-phthalic acid, dimethyl amino ethanel, dimethylol cyclohexane, diethanol amine, morpholine, ammonia, methyl amino propanol, pentaerythritol, trimethylol propane, malic acid.

Use/Production. (S) Printing ink and adhesives. Prod. range: 180,000 kg/yr.

P 90-1366

Manufacturer. Pfister Chemical, Inc.

Chemical. (S) 4-*N*-*N*-Dimethylamino benzene diazonium 5 sulfosalicylate.

Use/Production. (S) Diazo reproduction paper & film. Prod. range: 75,000 kg/yr.

P 90-1367

Manufacturer. Pfister Chemical, Inc.

Chemical. (S) 4-*N*-*N*-Dimethylamino benzene diazonium 5 sulfosalicylate.

Use/Production. (S) Diazo reproduction paper & film. Prod. range: 45,000 kg/yr.

P 90-1368

Manufacturer. Pfister Chemical, Inc.

Chemical. (G) 3-Methyl-4–(1-pyrrodinyl)benzene diazonium 5 sulfosalicylates.

Use/Production. (S) Diazo reproduction paper & film. Prod. range: 7,300 kg/yr.

P 90-1369

Manufacturer. Pfister Chemical, Inc.

Chemical. (S) 2,5-Diethoxy-4-morpholino-benzene diazonium 5 sulfosalicylate.

Use/Production. (S) Diazo reproduction paper & film. Prod. range: 82,000 kg/yr.

P 90-1370

Manufacturer. Pfister Chemical, Inc.

Chemical. (S) 2,5-Dibutoxy-4-morpholino-benzene diazonium 5 sulfosalicylate.

Use/Production. (S) Diazo reproduction paper & film. Prod. range: 14,000 kg/yr.

P 90-1371

Manufacturer. Confidential.

Chemical. (G) Calcium and strontium salt of the azo dye.

Use/Production. (G) Open, nondispersive use. Prod. range: Confidential.

P 90-1372

Importer. Confidential.

Chemical. (G) Aliphatic nitrile.

Use/Import. (G) Ingredients for use in consumer products. Import range: 100–500 kg/yr.

Toxicity Data. Acute oral toxicity: LD50 > 2,000 mg/kg species (Rat). Skin irritation: moderate species (Rabbit). Skin sensitization: positive species (Guinea pig).

P 90-1373

Manufacturer. Confidential.

Chemical. (G) Silicone-modified alkyd resin.

Use/Production. (G) Printing ink resin. Prod. range: Confidential.

P 90-1374

Manufacturer. Confidential.

Chemical. (G) Aromatic epoxy resin ester.

Use/Production. (G) Printing ink resin. Prod. range: Confidential.

P 90-1375

Manufacturer. Stepan Company.

Chemical. (G) Amidocarboxy benzoate.

Use/Production. (S) Emulsifer for paint, paper, textile. Prod. range: Confidential.

P 90-1376

Manufacturer. Stepan Company.

Chemical. (G) Amidocarboxy benzoate.

Use/Production. (S) Emulsifer for paint, paper, textile. Prod. range: Confidential.

P 90-1377

Importer. Metal Coatings International Inc.

Chemical. (G) Anionic sulfated ester.

Use/Import. (G) Open, nondispersive use (liquid paint). Import range: Confidential.

P 90-1378

Manufacturer. The Dow Company.

Chemical. (G) Ziegler catalyst precursor.

Use/Production. (S) Olefin polymer catalyst precursor. Prod. range: Confidential.

P 90-1379

Manufacturer. The Dow Chemical Company.

Chemical. (G) Ziegler catalyst precursor.

Use/Production. (S) Olefin polymer actalyst precursor. Prod. range: Confidential.

P 90-1380

Manufacturer. Confidential.

Chemical. (G) Oxyalkylated amine acetate.

Use/Production. (G) Used in the printing industry. Prod. range: Confidential.

P 90-1381

Manufacturer. Confidential.

Chemical. (G) Polynuclear polyhydroxy phenol.

Use/Production. (G) Intermediate in the production of photoactive compounds for use in photoresist. Prod. range: Confidential.

P 90-1382

Manufacturer. Confidential.

Chemical. (G) Naphthaquinone sulfonyl ester of a polynuclear polyhydroxy phenol.

Use/Production. (S) Chemical intermediate used in the manufacture of photoresist. Prod. range: Confidential.

P 90-1383

Importer. Hoechst Celanese Corporation.

Chemical. (G) Polyester resin.

Use/Import. (S) Binder for pigment in the paste ink industry. Import range: Confidential.

P 90-1384

Manufacturer. Confidential.

Chemical. (G) Ethoxy benzothiazole disulfide.

Use/Production. (G) Polymerization promoter. Prod. range: Confidential.

Toxicity Data. Acute oral toxicity: LD50 > 5 g/kg species (Rat). Acute dermal toxicity: LD50 > 2 g/kg species (Rabbit). Skin irritation: negligible species (Rabbit). Mutagenicity: negative.Skin sensitization: negative species (Guinea pig).

P 90-1385

Manufacturer. E.I. Du Pont De Nemours & Co., Inc.

Chemical. (G) Substituted ethylene copolymer.

Use/Production. (G) Binder. Prod. range: Confidential.

P 90-1387

Importer. Unichema North America.

Chemical. (G) Fatty acids, C_{22}-unsaturated, dimers.

Use/Import. (G) Polymer building block. Import range: Confidential.

P 90-1388

Importer. Unichema North America.

Chemical. (G) Fatty acids, C_{22}-unsaturated, dimers, hydrogenated.

Use/Import. (G) Copolymer building block. Import range: Confidential.

P 90-1389

Manufacturer. Amoco Chemical Company.

Chemical. (G) Aromatic polyimide.

Use/Production. (G) Protective coating. Prod. range: Confidential.

P 90-1391

Manufacturer. Confidential.

Chemical. (G) Propenate-terminated alkyl and alkoxy substituted silane.

Use/Production. (G) A formulation component for open, nondispersive use. Prod. range: Confidential.

P 90-1392

Manufacturer. Confidential.

Chemical. (G) Poly acrylate.

Use/Production. (G) Open dispersive use. Prod. range: Confidential.

P 90-1393

Manufacturer. Confidential.

Chemical. (S) Reaction products of bisphenol A/epichlorohydrin based epoxy resin, tetrabromobisphenol A, carboxyl-terminated butudiene/acrylonitrile copolymer, methacrylic acid.

Use/Production. (G) Resin used to make fiber reinforced laminates. Prod. range: Confidential.

P 90-1394

Manufacturer. Basf Corporation.

Chemical. (S) Phosphoric acid, sodium zinc salt.

Use/Production. (S) Water treatment additive, supplement from agricultural fertilizer, waste disposal by landfill. Prod. range: Confidential.

P 90-1395

Manufacturer. Confidential.

Chemical. (G) Urethane anhydride.

Use/Production. (G) Coating with dispersive use. Prod. range: 200,000–300,000 kg/yr.

P 90-1396

Importer. Confidential.

Chemical. (G) Stryene-acrylate-methacrylate copolymer.

Use/Import. (G) Component of copies toner. Import range: 20,000–30,000 kg/yr.

Toxicity Data. Eye irritation: slight species (Rabbit). Skin irritation: negligible species (Rabbit). Skin sensitization: positive species (Guinea Pig).

P 90-1397

Manufacturer. Modine Manufacturing Company.

Chemical. (G) Dialkylamine hydrohalide.

Use/Production. (S) Tin/lead solder flux. Prod. range: Confidential.

P 90-1398

Manufacturer. Confidential.

Chemical. (S) 2-[2,4-Bis-(1,1-dimethylpropyl) phenoxy]-*N*-[4–[4,5-dihydro-5-oxo-3–(1-pyrrolidinyl)-1*H*-pyrazol-1-yl] phenyl] butanamide monohydrochloride.

Use/Production. (G) Chemical intermediate. Prod. range: 5,200 kg/yr.

P 90-1399

Manufacturer. Eastman Kodak Company.

Chemical. (S) 6-Amino-2,4-dichloro-3-ethylphenol, sulfate.

Use/Production. (G) Chemical intermediate. Prod. range: 30,000–85,000 kg/yr.

P 90-1400

Manufacturer. Confidential.

Chemical. (S) 2,7-Naphthalenedisulfonic acid, 4,4'–[1,4-phenylenebis[imino(6-chloro-1,3,5-triazine-4,2-diyl)imino]]bis[5-hydroxy-6-[(2-sulfophenyl) azo]-, potassium sodium salt.

Use/Production. (S) Powder dye for dyeing of cellulosic fibers and cloth. Prod. range: Confidential.

P 90-1401

Manufacturer. Confidential.

Chemical. (G) Polyether benzamide.

Use/Production. (G) Open, nondispersive. Prod. range: Confidential.

P 90-1402

Manufacturer. Hoechst Celanese Corporation.

Chemical. (G) Substituted benzesulfonic acid salt.

Use/Production. (G) Fiber reactive dye. Prod. range: 8,500–17,000 kg/yr.

P 90–1403

Manufacturer. Hoechst Celanese Corporation.

Chemical. (G) Substituted benzenesulfonic acid salt.

Use/Production. (G) Fiber reactive dye. Prod. range: 8,500–17,000 kg/yr.

P 90–1404

Manufacturer. Hoechst Celanese Corporation.

Chemical. (G) Substituted benzenesulfonic acid salt.

Use/Production. (G) Fiber reactive dye. Prod. range: 8,500–17,000 kg/yr.

P 90–1405

Manufacturer. Confidential.

Chemical. (G) Silicone-modified polyester.

Use/Production. (G) Printing ink resin. Prod. range: Confidential.

P 90–1406

Manufacturer. Confidential.

Chemical. (G) Silicone-modified polyester.

Use/Production. (G) Printing ink resin. Prod. range: Confidential.

P 90–1407

Importer. Confidential.

Chemical. (G) Styrene-*N*-butylacrylate-*N*-butylmethacrylate-maleic acid monobutyl ester copolymer.

Use/Import. (G) Open, nondispersive use. Import range: Confidential.

P 90–1408

Manufacturer. Confidential.

Chemical. (G) Unsaturated aliphatic alcohol.

Use/Production. (S) Agricultural pheromone selectivity for redback cutworm oriental fruit moth. Prod. range: Confidential.

P 90–1409

Importer. Confidential.

Chemical. (G) Silicone acrylate.

Use/Import. (G) Open, nondispersive use. Import range: Confidnetial.

Toxicity Data. Acute oral toxicity: LD50 > 5,000 mg/kg species (Rat). Eye irritation: none species (Rabbit). Skin irritation: negligible species (Rabbit). Skin sensitization: negative species (Guinea pig).

P 90–1411

Manufacturer. Dow Corning Corporation.

Chemical. (G) Silica, (organosilyl)oxy)-modified.

Use/Production. (G) Silicone sealant. Prod. range: Confidential.

Toxicity Data. Acute oral toxicity: LD50 > 5,000 mg/kg species (Rat). Acute dermal toxicity: LD50 > 2,000 mg/kg species (Rabbit). Eye irritation: slight species (Rabbit).Skin irritation: negligible species (Rabbit). Mutagenicity: negative.

P 90–1413

Manufacturer. Confidential.

Chemical. (G) Halogenated aromatic amine.

Use/Production. (G) Flame retardant. Prod. range: Confidential.

P 90–1414

Importer. Confidential.

Chemical. (G) Tricycloalkanol, 4-alkyl-8-methylene.

Use/Import. (G) Fragrance component. Import range: Confidential.

Toxicity Data. Acute oral toxicity: LD50 4.4 g/kg species (Rat). Acute dermal toxicity: LD50 > 2 g/kg species (Rabbit). Eye irritation: moderate species (Rabbit). Skin sensitization: negative species (Guinea pig).

P 90–1415

Manufacturer. Confidential.

Chemical. (G) Substituted succinimide.

Use/Production. (G) Fuel additive. Prod. range: Confidential.

Toxicity Data. Acute oral toxicity: LD50 5 g/kg species (Rat). Acute dermal toxicity: LD50 2 g/kg species (Rabbit). Eye irritation: none species (Rabbit). Skin irritation: slight species (Rabbit).

P 90–1416

Manufacturer. Confidential.

Chemical. (G) Acrylate methylacrylic polymer.

Use/Production. (G) Coating with dispersive use. Prod. range: Confidential.

P 90–1417

Manufacturer. Sika Corporation.

Chemical. (G) Complex epoxy resin/amine adducts.

Use/Production. (S) Crosslinking agent for epoxy type adhesives. Prod. range: 35,000–38,000 kg/yr.

P 90–1418

Manufacturer. Sika Corporation.

Chemical. (G) Complex epoxy resin/amine adducts.

Use/Production. (S) crosslinking agent for epoxy-type adhesives and coatings. Prod. range: 26,000–29,000 kg/yr.

P 90–1419

Importer. Confidential.

Chemical. (G) Sulphonated polyether ether sulfone-co-polyether sulphone.

Use/Import. (G) Membrane filtration material. Import range: Confidential.

Toxicity Data. Acute oral toxicity: LD50 > 2,000 mg/kg species (Rat). Eye irritation: none species (Rabbit). Skin irritation: slight species (Rabbit). Mutagenicity: negative. Skin sensitization: negative species (Guinea Pig).

P 90–1420

Manufacturer. Sika Corporation.

Chemical. (G) Substituted melamine polymer.

Use/Production. (S) High water reducer for concrete, dispersant for gypsum board manufacturing. Prod. range: 280,000–300,000 kg/yr.

P 90–1421

Manufacturer. Sika Corporation.

Chemical. (G) Substituted melamine polymer.

Use/Production. (S) High water reducer for concrete and dispersant for gypsum board manufacturing. Prod. range: 280,000–300,000 kg/yr.

P 90–1422

Manufacturer. Rohm and Haas Co.

Chemical. (S) 2-Propenoic acid, 3–(2-hydroxy ethoxy)-3-oxopropyl ester.

Use/Production. (G) Destructive use. Prod. range: Confidential.

P 90–1423

Manufacturer. Confidential.

Chemical. (G) Polyurethane-urea.

Use/Production. (S) Binder for archectural coatings. Prod. range: Confidential.

P 90–1424

Importer. Confidential.

Chemical. (G) Polycarbonate.

Use/Import. (G) Open, nondispersive use. Import range: Confidential.

P 90–1426

Manufacturer. Confidential.

Chemical. (G) Hydroxy functional acrylic polymer.

Use/Production. (S) Coatings. Prod. range: Confidential.

P 90–1427

Manufacturer. Confidential.

Chemical. (G) Hydroxy functional acrylic polymer.

Use/Production. (S) Coatings. Prod. range: Confidential.

P 90–1428

Manufacturer. Confidential.

Chemical. (G) Hydroxy functional acrylic polymer.

Use/Production. (S) Coatings. Prod. range: Confidential.

P 90–1429

Manufacturer. Confidential.

Chemical. (G) Hydroxy functional acrylic polymer.

Use/Production. (S) Coatings. Prod. range: Confidential.

P 90-1430

Manufacturer. Confidential.

Chemical. (G) Hydroxy funtional acrylic polymer.

Use/Production. (S) Coatings. Prod. range: Confidential.

P 90-1431

Manufacturer. Confidential.

Chemical. (G) Hydroxy functional acrylic resin.

Use/Production. (S) Coatings. Prod. range: Confidential.

P 90-1432

Manufacturer. Confidential.

Chemical. (G) Hydroxy functional acrylic resin.

Use/Production. (S) Coatings. Prod. range: Confidential.

P 90-1433

Manufacturer. Confidential.

Chemical. (G) Hydroxy functional acrylic resin.

Use/Production. (S) Coatings. Prod. range: Confidential.

P 90-1434

Manufacturer. Confidential.

Chemical. (G) Hydroxy functional acrylic resin.

Use/Production. (S) Coatings. Prod. range: Confidential.

P 90-1435

Manufacturer. Confidential.

Chemical. (G) Hydroxy functional acrylic resin.

Use/Production. (S) Coatings. Prod. range: Confidential.

P 90-1436

Manufacturer. Confidential.

Chemical. (G) Hydroxy functional acrylic resin.

Use/Production. (S) Coatings. Prod. range: Confidential.

P 90-1437

Manufacturer. Confidential.

Chemical. (G) Hydroxy functional acrylic polymer.

Use/Production. (G) Coatings. Prod. range: Confidential.

P 90-1438

Manufacturer. Confidential.

Chemical. (G) Hydroxy functional acrylic copolymer.

Use/Production. (G) Coatings. Prod. range: Confidential.

P 90-1439

Manufacturer. Confidential.

Chemical. (G) Hydroxy functional acrylic polymer.

Use/Production. (G) Coatings. Prod. range: Confidential.

P 90-1440

Manufacturer. Confidential.

Chemical. (G) Hydroxy functional acrylic polymer.

Use/Production. (G) Coatings. Prod. range: Confidential.

P 90-1441

Manufacturer. Confidential.

Chemical. (G) Hydroxy functional acrylic copolymer.

Use/Production. (G) Coatings. Prod. range: Confidential.

P 90-1442

Manufacturer. Confidential.

Chemical. (G) Hydroxy functional acrylic copolymer.

Use/Production. (S) Coatings. Prod. range: Confidnetial.

P 90-1443

Manufacturer. Confidential.

Chemical. (G) Hydroxy functional acrylic copolymer.

Use/Production. (S) Coatings. Prod. range: Confidential.

P 90-1445

Manufacturer. Confidential.

Chemical. (G) Hydroxy functional acrylic copolymer.

Use/Production. (S) Coatings. Prod. range: Confidential.

P 90-1446

Manufacturer. Confidential.

Chemical. (G) Hydroxy functional acrylic copolymer.

Use/Production. (S) Coatings. Prod. range: Confidential.

P 90-1447

Manufacturer. Confidential.

Chemical. (G) Acrylic polymer.

Use/Production. (G) Coating's polymer intermediate. Prod. range: Confidential.

P 90-1448

Manufacturer. Confidential.

Chemical. (G) Acrylic polymer.

Use/Production. (G) Coating's polymer intermediate. Prod. range: Confidential.

P 90-1449

Manufacturer. Confidential.

Chemical. (G) Acrylic polymer.

Use/Production. (G) Coating's polymer intermediate. Prod. range: Confidential.

P 90-1450

Manufacturer. Huls America Inc.

Chemical. (S) Di-*t*-butyldimethoxysilane.

Use/Production. (G) Catalyst additive. Prod. range: 40–4,000 kg/yr.

P 90-1451

Manufacturer. Bedoukian Research, Inc.

Chemical. (S) 11-Hexadecen-l-ol, acetate,.

Use/Production. (S) Agricultural pheromone. selective for: lesser cornstalk borer, clover, cutworm, cabbage armyworm. Prod. range: Confidential.

P 90-1452

Importer. Confidential.

Chemical. (G) Benzenesulfonic acid, alkyl derivatives., salt with heteromonocycle substituted alkylamine.

Use/Import. (G) Paint additive, open nondispersive use. Import range: Confidential.

Toxicity Data. Acute oral toxicity: LD50 > 2,400 mg/kg species (Rat).

P 90-1453

Manufacturer. Confidential.

Chemical. (G) Substituted succinimide.

Use/Production. (G) Industrial lubricant additive. Prod. range: Confidential.

Toxicity Data. Acute oral toxicity: LD50 > 5 g/kg species (Rat). Acute dermal toxicity: LD50 > 2 g/kg species (Rabbit).

P 90-1454

Manufacturer. Confidential.

Chemical. (G) Hydrogenated arylated polydecene.

Use/Production. (G) Automotive lubricant. Prod. range: Confidential.

Toxicity Data. Acute oral toxicity: LD50 > 5 g/kg species (Rat). Acute dermal toxicity: LD50 >2 g/kg species (Rabbit). Eye irritation: none species (Rabbit). Mutagenicity: negative. Skin irritation: negligible species (Rabbit).

P 90-1455

Manufacturer. The Dow Chemical.

Chemical. (G) Cyclic amide.

Use/Production. (G) Gas scrubbing chemical. Prod. range: Confidential.

Toxicity Data. Static acute toxicity: time LC50 48H4400 mg/l species (Daphnia Magna).

P 90-1456

Manufacturer. Confidential.

Chemical. (G) Acrylate copolymer.

Use/Production. (G) Open, nondispersive. Prod. range: Confidential.

P 90-1457

Manufacturer. Monosanto Company.

Chemical. (G) Adduct of polyvinyl butyral.

Use/Production. (G) Crosslinkable binder. Prod. range: Confidential.

P 90-1458

Manufacturer. Confidential.

Chemical. (G) Acrylic copolymer.

Use/Production. (G) Open, nondispersive. Prod. range: Confidential.

P 90-1459

Manufacturer. Confidential.

Chemical. (G) Acrylic copolymer.

Use/Production. (G) Open, nondispersive. Prod. range: Confidential.

P 90-1460

Manufacturer. Confidential.

Chemical. (G) Reaction product of polyalkylene oxide polyol, isocyanate, diol, and polyester polyol.

Use/Production. (G) Reactive elastomer. Prod. range: Confidential.

P 90-1461

Importer. Confidential.

Chemical. (S) Slack wax (petroleum), hydrotreated.

Use/Import. (S) Base oil for engine lubricants (motor oil) and industrial oil formulations. Import range: 3000,000–3,000,000 kg/yr.

P 90-1462

Importer. Ciba-Geigy Corporation.

Chemical. (G) Azo methin copper complex sulfonated; mixture of calcium amd sodium salts.

Use/Import. (G) Additive for colorant in open, nondispersive use. Import range: Confidential.

Toxicity Data. Acute oral toxicity: LD50 > 2,000 mg/kg species (Rat). Eye irritation: none species (Rabbit). Skin irritation: negligible species (Rabbit). Mutagenicity: negative.

P 90-1463

Importer. Confidential.

Chemical. (S) Butanoic acid, 4-amino-, reaction products with formaldehyde, calcium salts.

Use/Import. (G) An additive that enhances the drying time of plastic product. Import range: Confidential.

P 90-1464

Manufacturer. Confidential.

Chemical. (G) Aromatic amidophosphate.

Use/Production. (G) Stable maintenance product. Prod. range: Confidential.

Toxicity Data. Acute oral toxicity: LD50 910 mg/kg species (Rat). Acute dermal toxicity: LD50 > 2 g/kg species (Rabbit). Eye irritation: slight species (Rabbit). Mutagenicity: negative. Skin irritation: negligible species (Rabbit).

P 90-1465

Importer. NOF America Corporation.

Chemical. (G) Styrene vinyl acetate stock copolymer.

Use/Import. (G) Open, nondispersive use (solid). Import range: Confidential.

P 90-1466

Importer. Confidential.

Chemical. (G) Aqueous polyurethane dispersion.

Use/Import. (S) Leather coating. Import range: 80,000–300,000 kg/yr.

Toxicity Data. Eye irritation: none species (Rabbit). Skin irritation: negligible species (Rabbit).

P 90-1467

Importer. Confidential.

Chemical. (G) Aqueous polyurethane dispersion.

Use/Import. (S) Leather coating. Import range: 50,000–200,000 kg/yr.

P 90-1468

Importer. Confidential.

Chemical. (G) "Dialkyl substituted heterocyclic aromatic compound".

Use/Import. (G) Automotive component. Import range: Confidential.

Toxicity Data. Eye irritation: none species (Rabbit). Skin irritation: negligible species (Rabbit).

P 90-1469

Importer. Confidential.

Chemical. (G) Ethylene acrylic copolymer salt.

Use/Import. (G) Molded and extruded products, packing, film products adhesives. Import range: Confidential.

P 90-1470

Manufacturer. Confidential.

Chemical. (G) Alkylaryl ether sulfate/sulfonate, sodium salts.

Use/Production. (G) An additive used in the textile industry. Prod. range: Confidential.

P 90-1471

Manufacturer. The C. P. Hall Company.

Chemical. (S) Fatty acids, C_{14-18} C_{16-22} unsaturated, esters with 2-octyl-1-dodecanol.

Use/Production. (G) Industrial lubricant. Prod. range: Confidential.

P 90-1472

Manufacturer. Minnesota Mining & Manufacturing Co.

Chemical. (G) Ethanediimidic acid compound.

Use/Production. (S) Chemical intermediate. Prod. range: Confidential.

P 90-1473

Manufacturer. Minnesota Mining & Manufacturing Co.

Chemical. (G) Ethylenediimidic acid derivative.

Use/Production. (S) Color form. Prod. range: Confidential.

Toxicity Data. Acute oral toxicity: LD50 > 5 g/kg species (Rat). Eye irritation: none species (Rabbit). Skin irritation: negligible species (Rabbit).

P 90-1474

Importer. EM Industries, Inc.

Chemical. (S) Trans-4'-(4-*N*-propylcyclohexyl)-4-ethylbenzene.

Use/Import. (S) Use in liquid crystal mixtures for application. Import range: Confidential.

P 90-1475

Manufacturer. Rohm and Haas Company.

Chemical. (G) Modified acrylic polymer.

Use/Production. (S) Processing additive for polyolefin. Prod. range: Confidential.

Toxicity Data. Acute oral toxicity: LD50 > 2 g/kg species (Rat).

P 90-1476

Manufacturer. Confidential.

Chemical. (G) Alkyl aryloxy silane.

Use/Production. (S) Chemical intermediate. Prod. range: Confidential.

P 90-1477

Manufacturer. Confidential.

Chemical. (G) Substituted aryl trialkoxy silane.

Use/Production. (G) Coupling agent. Prod. range: Confidential.

P 90-1478

Importer. Sherex Chemical Company, Inc.

Chemical. (G) Metal alkyl chloride.

Use/Import. (S) Catalyst olefin polymerization. Import range: Confidential.

P 90-1479

Importer. Confidential.

Chemical. (G) Modified sulfonic acid.

Use/Import. (S) Flame retardant additive. Import range: 364–545 kg/yr.

P 90-1480

Importer. Ausimont USA, Inc.

Chemical. (G) Perfluoroalkoxy polymer.

Use/Import. (S) Dispersion coatings. Import range: Confidential.

P 90-1481

Importer. Confidential.

Chemical. (G) Rosin ester phenolic modified.

Use/Import. (S) Printing inks. Import range: Confidential.

P 90-1482

Manufacturer. Confidential.

Chemical. (G) Chemically modified cyclodextrin.

Use/Production. (G) Medicinal agent. Prod. range: Confidential.

P 90-1483

Manufacturer. Confidential.

Chemical. (G) Halogenated ethylene vinyl acetate copolymer; halogenated ethyl benzene copolymer; halogenated rubber copolymer.

Use/Production. (G) Adhesive flame retardant. Prod. range: Confidential.

Toxicity Data. Acute oral toxicity: LD50 > 5,000 mg/kg species (Rat). Acute dermal toxicity: LD50 >2,000 mg/kg species (Rabbit). Eye irritation: none species (Rabbit). Mutagenicity: negative. Skin irritation: negligible species (Rabbit).

P 90-1484

Manufacturer. Confidential.

Chemical. (G) Halogenated ethylene vinyl acetate copolymer ethyl benzene copolymer; halogenated rubber copolymer.

Use/Production. (G) Adhesive flame retardant. Prod. range: Confidential.

Toxicity Data. Acute oral toxicity: LD50 > 5,000 mg/kg species (Rat). Acute dermal toxicity: LD50 > 2,000 mg/kg species (Rabbit). Eye irritation: none species (Rabbit). Mutagenicity: negative. Skin irritation: negligible species (Rabbit).

P 90-1485

Manufacturer. Confidential.

Chemical. (G) Halogenated ethylene vinyl acetate copolymer; halogenated ethyl benzene copolymer; halogenated rubber copolymer.

Use/Production. (G) Adhesive flame retardant. Prod. range: Confidential.

Toxicity Data. Acute oral toxicity: LD50 > 5,000 mg/kg species (Rat). Acute dermal toxicity: LD50 > 2,000 mg/kg species (Rabbit). Eye irritation: none species (Rabbit). Mutagenicity: negative. Skin irritation: negligible species (Rabbit).

P 90-1486

Manufacturer. Confidential.

Chemical. (G) Halogenated ethylene vinyl acetate copolymer; halogenated ethyl benzene copolymer; halogenated rubber copolymer.

Use/Production. (G) Adhesive flame retardant. Prod. range: Confidential.

Toxicity Data. Acute oral toxicity: LD50 > 5,000 mg/kg species (Rat). Acute dermal toxicity: LD50 > 2,000 mg/kg species (Rabbit). Eye irritation: none species (Rabbit). Mutagenicity: negative. Skin irritation: negligible species (Rabbit).

P 90-1487

Manufacturer. Worten Industries, Inc.

Chemical. (S) (Xymethyl)2-methyl.

Use/Production. (G) Adhesives/ dispersive use. Prod. range: Confidential.

P 90-1488

Manufacturer. Confidential.

Chemical. (G) Crosslinked acrylic copolymer.

Use/Production. (G) Open nondispersive use. Prod. range: Confidential.

P 90-1489

Manufacturer. Confidential.

Chemical. (G) Crosslinked acrylic copolymer salt.

Use/Production. (G) Open nondispersive use. Prod. range: Confidential.

P 90-1490

Manufacturer. Confidential.

Chemical. (G) Crosslinked acrylic copolymer salt.

Use/Production. (G) Open nondispersive use. Prod. range: Confidential.

P 90-1491

Manufacturer. Confidential.

Chemical. (G) Crosslinked acrylic copolymer salt.

Use/Production. (G) Open nondispersive use. Prod. range: Confidential.

P 90-1492

Manufacturer. Confidential.

Chemical. (G) Crosslinked acrylic copolymer.

Use/Production. (G) Open nondispersive use. Prod. range: Confidential.

P 90-1493

Manufacturer. Confidential.

Chemical. (G) Crosslinked acrylic copolymer salt.

Use/Production. (G) Open nondispersive use. Prod. range: Confidential.

P 90-1494

Manufacturer. Confidential.

Chemical. (G) Crosslinked acrylic copolymer salt.

Use/Production. (G) Open nondispersive use. Prod. range: Confidential.

P 90-1495

Manufacturer. Confidential.

Chemical. (G) Crosslinked acrylic copolymer salt.

Use/Production. (G) Open, nondispersive use. Prod. range: Confidential.

P 90-1496

Manufacturer. Confidential.

Chemical. (G) Crosslinked acrylic polymer.

Use/Production. (G) Open, nondispersive use. Prod. range: Confidential.

P 90-1497

Manufacturer. Confidential.

Chemical. (G) Crosslinked acrylic polymer salt.

Use/Production. (G) Open, nondispersive use. Prod. range: Confidential.

P 90-1498

Manufacturer. Confidential.

Chemical. (G) Crosslinked acrylic polymer salt.

Use/Production. (G) Open, nondispersive use. Prod. range: Confidential.

P 90-1499

Manufacturer. Confidential.

Chemical. (G) Crosslinked acrylic polymer salt.

Use/Production. (G) Open, nondispersive use. Prod. range: Confidential.

P 90-1500

Importer. Confidential.

Chemical. (G) Tricycloalkanol, 4-alkyl-8-methylene alkyl ester.

Use/Import. (G) Fragrance component. Import range: Confidential.

Toxicity Data. Acute oral toxicity: LD50 > 5.0 g/kg species (Rat). Acute dermal toxicity: LD50 > 2.0 g/kg species (Rabbit). Eye irritation: slight species (Rabbit). Mutagenicity: negative.Skin irritation: slight species (Rabbit).

P 90-1501

Importer. Confidential.

Chemical. (G) Metalized sulfonated phenyl amino sulfo naphthalenyl azo biphenyl azo substituted naphthalene, sodium salt.

Use/Import. (S) Direct dye for textiles. Import range: Confidential.

P 90-1502

Importer. Confidential.

Chemical. (G) Metalized sulfo phenyl azo oxy phneyl azo benzoate, sodium salt.

Use/Import. (S) Acid dye for leathers. Import range: Confidential.

P 90-1503

Importer. Confidential.

Chemical. (G) Sulfo benzene acid, ethene diyl tri sodium salt, reaction product with amino phenyl azo benzene sulfinic acid, sodium salt.

Use/Import. (S) Direct dye for textiles. Import range: Confidential.

P 90-1504

Importer. Confidential.

Chemical. (G) Di napthalene sulfonic acid (sulfo phenylene)imino-substituted triazine imino bis phenylazo, sodium salt.

Use/Import. (S) Direct dye for textiles. Import range: Confidential.

P 90-1505

Importer. Confidential.

Chemical. (G) Metalized di sulfo phenyl azo (substituted) naphthalene; triazine.

Use/Import. (S) Direct dye for textiles. Import range: Confidential.

P 90-1506

Importer. Confidential.

Chemical. (G) Copper phthalocyane sulfunyl sulfo derivative, sodium salt.

Use/Import. (S) Direct dye for textiles. Import range: Confidential.

P 90-1507

Importer. Confidential.

Chemical. (G) Pyrozolic acid ethene diyl bis sulfo phenylene chloro triazine sulf phinyl azo substituted sulfo phenylene azo bis substituted sulfo phenyl, sodium salt.

Use/Import. (S) Reactive dye for textiles. Import range: Confidential.

P 90-1508

Manufacturer. APL Engineering Materials Inc.

Chemical. (S) Barium yttrium oxide tungstate.

Use/Production. (S) Coatings for electrodes in high intensity discharge lamps. Prod. range: Confidential.

P 90-1509

Manufacturer. Confidential.

Chemical. (G) Potassium salt of aliphatic fatty acids.

Use/Production. (S) Lubricant and corrosion inhibitor. Prod. range: Confidential.

P 90-1510

Manufacturer. Confidential.

Chemical. (G) Potassium salt of aliphatic fatty acid.

Use/Production. (S) Lubricant and corrosion inhibitor. Prod. range: Confidential.

P 90-1511

Importer. Huls America Inc.

Chemical. (G) Reaction product of aryl and alkyl dicarboxylic acids/alkane diols polyester with an acrylate adduct.

Use/Import. (G) Curable adhesive resins. Import range: 1,000–10,000 kg/yr.

P 90-1512

Manufacturer. Confidential.

Chemical. (G) Hydroxylated polyacrylate.

Use/Production. (S) Polymer crosslinking agent. Prod. range: Confidential.

P 90-1513

Manufacturer. E.I. Du Pont De Nemours & Co., Inc.

Chemical. (G) Blocked animated isocyanate.

Use/Production. (G) Coating. Prod. range: Confidential.

P 90-1514

Manufacturer. E.I. Du Pont De Nemours & Co., Inc.

Chemical. (G) Blocked animated isocyanate.

Use/Production. (G) Coating. Prod. range: Confidential.

P 90-1515

Manufacturer. E.I. Du Pont De Nemours & Co., Inc.

Chemical. (G) Blocked animated isocyanate.

Use/Production. (G) Coating. Prod. range: Confidential.

P 90-1516

Manufacturer. E.I. Du Pont De Nemours & Co., Inc.

Chemical. (G) Blocked animated isocyanate.

Use/Production. (G) Coating. Prod. range: Confidential.

P 90-1517

Manufacturer. E.I. Du Pont De Nemours & Co., Inc.

Chemical. (G) Blocked animated isocyanate.

Use/Production. (G) Coating. Prod. range: Confidential.

P 90-1518

Manufacturer. E.I. Du Pont De Nemours & Co., Inc.

Chemical. (G) Blocked animated isocyanate.

Use/Production. (G) Coating. Prod. range: Confidential.

P 90-1519

Manufacturer. E.I. Du Pont De Nemours & Co., Inc.

Chemical. (G) Blocked animated isocyanate.

Use/Production. (G) Coating. Prod. range: Confidential.

P 90-1520

Manufacturer. E.I. Du Pont De Nemours & Co., Inc.

Chemical. (G) Blocked animated isocyanate.

Use/Production. (G) Coating. Prod. range: Confidential.

P 90-1521

Manufacturer. E.I. Du Pont De Nemours & Co., Inc.

Chemical. (G) Blocked animated isocyanate.

Use/Production. (G) Coating. Prod. range: Confidential.

P 90-1522

Manufacturer. E.I. Du Pont De Nemours & Co., Inc.

Chemical. (G) Blocked animated isocyanate.

Use/Production. (G) Coating. Prod. range: Confidential.

P 90-1523

Manufacturer. E.I. Du Pont De Nemours & Co., Inc.

Chemical. (G) Blocked animated isocyanate.

Use/Production. (G) Coating. Prod. range: Confidential.

P 90-1524

Manufacturer. E.I. Du Pont De Nemours & Co., Inc.

Chemical. (G) Blocked animated isocyanate.

Use/Production. (G) Coating. Prod. range: Confidential.

P 90-1525

Importer. Toyamenka (America) Inc.

Chemical. (S) 1,1'-(Cycloh exylimino)-bis-2-propanol.

Use/Import. (S) A water soluble cutting fluid used to clean and cool the cutting surface to aluminum ingot. Import range: 60–120 kg/yr.

P 90-1526

Importer. Toyamenka (America) Inc.

Chemical. (S) Sulfunized sorbitan mono-9-octadecenoate.

Use/Import. (S) A water soluble cutting fluid used to clean and cool the cutting surface to aluminum ingot. Import range: 60–120 kg/yr.

P 90-1527

Importer. Confidential.

Chemical. (G) Halogenated benzyl ester acrylate.

Use/Import. (G) Flame retardant additive for polymers. Import range: Confidential.

P 90-1528

Manufacturer. Confidential.

Chemical. (G) Phosphinicocarboxylates.

Use/Production. (S) Mineral scale inhibitor for use in oil and gas fields. Prod. range: Confidential.

P 90-1529

Manufacturer. Confidential.

Chemical. (G) Phosphinicocarboxylates, sodium salts.

Use/Production. (S) Mineral scale inhibitor for use in oil and gas fields. Prod. range: Confidential.

P 90-1530

Manufacturer. Confidential.
Chemical. (G) Phosphinicocarboxylates, ammonium salts.
Use/Production. (S) Mineral scale inhibitor for use in oil and gas fields. Prod. range: Confidential.

P 90-1531

Manufacturer. Confidential.
Chemical. (G) Phosphiniococarboxylates, sodium salts.
Use/Production. (S) Mineral scale inhibitor for use in oil and gas fields. Prod. range: Confidential.

P 90-1532

Manufacturer. Sika Coporation.
Chemical. (G) TDI reaction product with opolimeric diol and triols.
Use/Production. (S) Adhesive component in sealant formulations for construction applications. Prod. range: Confidential.

P 90-1533

Manufacturer. Allied-Signal, Inc.
Chemical. (G) Modified olefin-based polymer.
Use/Production. (G) Textile and paper treating chemical. Prod. range: Confidential.

P 90-1534

Manufacturer. Allied-Signal, Inc.
Chemical. (G) Modified olefin-based polymer.
Use/Production. (G) Textile and paper treating chemical. Prod. range: Confidential.

P 90-1535

Manufacturer. Aldrich Chemical Company.
Chemical. (S) Triphosgene.
Use/Production. (G) Chemical intermediate. Prod. range: Confidential.

P 90-1536

Importer. Confidential.
Chemical. (G) Polyhydantoin.
Use/Import. (S) Heat stabilizing ingredient in polyester enamel used for coating wire. Import range: 10,000–66,000 kg/yr.

P 90-1537

Importer. Confidential.
Chemical. (G) Polyurethane.
Use/Import. (S) Textile coating. Import range: 115,000 kg/yr.

P 90-1538

Importer. Zeon Chemicals U.S.A., Inc.
Chemical. (G) Propyleneoxide copolymer.
Use/Import. (S) Heat and oil resistant rubbers for automobile engine mount. Import range: Confidential.

P 90-1539

Manufacturer. Minnesota Mining & Manufacturing Co. (3M)
Chemical. (G) Phenyl substituted bisulfate salt.
Use/Production. (S) Chemical intermediate. Prod. range: Confidential.

P 90-1540

Manufacturer. Minnesota Mining & Manufacturing Co. 3M.
Chemical. (G) Phenyl sustituted iodonium salt.
Use/Production. (S) Polymerization initiator. Prod. range: Confidential.

P 90-1541

Importer. Confidential.
Chemical. (S) Di (*p*-chlorobenzyl) oxalate.
Use/Import. (S) Efficiency improver (sensitizer) for heat sensitive recording sheets. Import range: Confidential.

P 90-1542

Manufacturer. Confidential.
Chemical. (G) Sodium salt of an arylsubstituted alkyl hemi-sulfate.
Use/Production. (S) Organic synthesis intermediate. Prod. range: 30,000–750,000 kg/yr.

P 90-1543

Manufacturer. Confidential.
Chemical. (G) Alkyl phosphate ester, metallic salt.
Use/Production. (G) An additive used by the enery production industry. Prod. range: Confidential.

P 90-1544

Importer. Confidential.
Chemical. (G) Alkylphenol formaldehyde copolymer.
Use/Import. (G) Contained use. Import range: Confidential.

P 90-1545

Importer. Confidential.
Chemical. (G) Alkylphenol formaldehyde copolymer.
Use/Import. (G) Contained use. Import range: Confidential.

Date: July 31, 1990.

Steven Newburg-Rinn,

Acting Director, Information Management Division, Office of Toxic Substances.

[FR Doc. 90-18309, Filed 8-3-90; 8:45 am]
BILLING CODE 6560-50-F

[OW-FRL-3817-3]

State Water Quality Standards: Annual Listing of EPA Approvals

AGENCY: Environmental Protection Agency (EPA).

ACTION: Notice.

SUMMARY: This notice contains a list of the States that have revised their water quality standards, dates of adoption by the State and dates of approval by EPA for the period of October 1988 through September 1989. This notice is published pursuant to a requirement of the Water Quality Standards Regulation (40 CFR 131.21).

FOR FURTHER INFORMATION CONTACT:

Region	WQS Coordinator	Phone No.
1	Eric Hall, JFK Federal Bldg., Boston, MA 02203.	617-565-3533
2	Rick Balla, (2WM-WSP)-Room 813, 26 Federal Plaza, New York, NY 10278.	212-264-1559
3	Randy Waite, 841 Chestnut Bldg., Philadelphia, PA 19107.	215-597-3425
4	Fritz Wagener, 345 Courtland St. NE., Atlanta, GA 30365.	404-347-2126
5	Larry Shepard, 230 S. Dearborn St., Chicago, IL 60604.	312-886-0135
6	David Neleigh, First Interstate Bank, Tower at Fountain Place, 1445 Ross Ave. 12th floor, Dallas, TX 75202.	214-655-7145
7	John Houlihan, 725 Minnesota Ave., Kansas City, KS 66101.	913-551-7432
8	Bill Wuerthele, 999 18th St. suite 500, Denver, CO 80202-2405.	303-293-1586
9	Phil Woods, 1235 Mission Street, San Francisco, CA 94103.	415-556-6322
10	Sally Marquis, 1200 Sixth Avenue, Seattle, WA 90101.	206-442-8293

SUPPLEMENTARY INFORMATION: This Notice lists State water quality standards review/revisions, approved by EPA, for the period October 1988 through September 1989. The most recent previous list of reviews and revisions of State water quality standards was published in the **Federal Register** on April 21, 1989. Today's Notice identifies the State regulatory documentation containing the State water quality standards and dates of State adoption and EPA approval. Not included in this Notice are: (1) The text of the water quality standards, or (2) any conditions (including disapprovals)

that might have been attached to the approvals.

The text of a State's standards and copies of the approval letters can be obtained from the State's pollution control agency or the appropriate EPA Regional Office (see above). Proprietary publications such as those of the Bureau of National Affairs also contain the test of State standards.

Dated: July 31, 1990.

Robert H. Wayland III,

Acting Assistant Administrator for Water.

Pennsylvania—Region 3

Water quality standards for the State of Pennsylvania are contained in title 25. Rules and Regulations; part I. Department of Environmental Resources; subpart C. Protection of Natural Resources; Article II. Water Resources; chapter 93. Water Quality Standards.

Revisions:

Adopted by the State: November 15, 1988.

EPA Action: Conditional approval September 29, 1989.

West Virginia—Region 3

Water quality standards for the State of West Virginia are contained in title 46, Legislative Rule, Water Resources Board, Series 1, Requirements Governing Water Quality Standards.

Revisions:

Adopted by the State: April 28, 1989 (Effective).

Adopted by Legislature: April 27, 1989.

EPA Action: Partial approval September 29, 1989.

Minnesota—Region 5

Water quality standards for the State of Minnesota are contained in Minnesota Rules, chapter 7050, "Standards for the Protection of the Quality and Purity of the Water of the State."

Revisions:

Adopted by the State: March 7, 1988.

EPA Action: Approval March 23, 1989.

Ohio—Region 5

State water quality standards for the surface waters of the State of Ohio are contained in the document entitled: "Ohio Administrative Code. Title 3745. OEPA. Chapter 1–Water Quality Standards" as amended.

Revisions:

Adopted by the State: December 22, 1988.

EPA Action: Approval May 26, 1989.

Wisconsin—Region 5

Water quality standards for the State of Wisconsin are contained in "Wisconsin Administrative Code, chapters NR 102, NR 104, NR 105, NR 106 and NR 207.

Revisions:

Adopted by the State: February 3, 1989.

EPA Action: Approval May 15, 1989.

Nebraska—Region 7

Water quality standards for the State of Nebraska are contained in Nebraska Administrative Code, Title 117—"Nebraska Water Quality Standards for Surface Waters."

Revisions:

Adopted by State: August 23, 1988.

EPA Action: Approval October 18, 1988.

Montana—Region 8

Water quality standards for the State of Montana are contained in "Administrative Rules of Montana, Title 16, chapter 20, subchapters 6 and 7—Surface Water Quality Standards and Nondegradation of Water Quality."

Revisions:

Adopted by the State: November 15, 1988.

EPA Action: Partial Approval March 8, 1989.

California—Region 9

Amendment to combine the water quality control plans for the Klamath River Basin and the North Coastal Basin into the "Water Quality Control Plan for the North Coast Region." State Board Resolution No. 88–121.

Revisions:

Adopted by the State: November 15, 1988.

EPA Action: Approved May 31, 1989.

Hawaii

Water quality standards for the State of Hawaii are contained in Hawaii's Department of Health Administrative Rules, Chapters 11–54 and relevant portions of 11–55.

Revisions:

Adopted by the State: April 4, 1988.

EPA Action: Approved July 10, 1989.

Nevada

1. 1987 Review of Salinity Standards for the Colorado River Basin.

2. Amendments to water quality standards for the Colorado River and Southern Nevada miscellaneous streams

Revisions:

Adopted by State: 1. May 24, 1988 and 2. June 20, 1985.

EPA Action: Approved 1. January 29, 1989 and 2. March 23, 1989.

FEDERAL COMMUNICATIONS COMMISSION

Public Information Collection Requirement Submitted to the Office of Management and Budget for Review

July 31, 1990.

The Federal Communications Commission has submitted the following information collection requirement to OMB for review and clearance under the Paperwork Reduction Act of 1980, 44 U.S.C. 3507.

Copies of this submission may be purchased from the Commission's duplicating contractor, International Transcription Service, 2100 M Street, NW., suite 140, Washington, DC 20037, or telephone (202) 857–3815. Persons wishing to comment on an information collection should contact Eyvette Flynn, Office of Management and Budget, room 3235 NEOB, Washington, DC 20503, telephone (202) 395–3785. Copies of these comments should also be sent to the Commission. For further information contact Doris Benz, Federal Communications Commission, telephone (202) 632–7513.

OMB No.: 3060–0090.

Title: Registration of Canadian Radio Station Licensee and Application for Permit to Operate.

Form No.: FCC 410.

Action: Extension (renewal).

Respondents: Individuals, Business (including small business), and Non-profit institutions.

Frequency of Response: On occasion.

Estimated Annual Burden: 223 Responses, five minutes each (average)

Needs and Uses: This form is used by Canadian licensees to request permission to operate mobile units or an amateur station in the United States. The data is necessary to establish eligibility for the permit, and for legal and enforcement purposes.

Federal Communications Commission.

Donna R. Searcy,

Secretary.

[FR Doc. 90–18321 Filed 8–3–90; 8:45 am]

BILLING CODE 6712-01-M

FEDERAL EMERGENCY MANAGEMENT AGENCY

Agency Information Collection Submitted to the Office of Management and Budget for Clearance

The Federal Emergency Management Agency (FEMA) has submitted to the Office of Management and Budget the following information collection

package for clearance in accordance with the Paperwork Reduction Act (44 U.S.C. chapter 35).

Type: Revision of 3067–0210.

Title: Emergency Broadcast System Data Base.

Abstract: FEMA Form 90–105, Emergency Broadcast System Data, will be used to complete the original Emergency Broadcast System (EBS) Data Base data collection and update the data base. The data base is used by the FEMA to manage the distribution of Federal funds to selected critical radio stations in the EBS. Since funding is limited for this Presidentially required communications system, the information will be used to determine which stations will receive funds in order to keep existing stations operational, enhance the survivability of the system, and expand the number of survivable stations that comprise the backbone of the EBS. The updated information will enable FEMA to analyze the condition and requirements of all involved stations and purchase protection and backup equipment to ensure that the EBS will function when needed.

Type of Respondents: Businesses or other for-profit.

Estimate of Total Annual Reporting and Recordkeeping Burden: 40 hours.

Number of Respondents: 200 original collections; 800 updates.

Estimated Average Burden Hours Per Response: 1 hour for original collections; 15 minutes for updates.

Frequency of Response: Annually.

Copies of the above information collection request and supporting documentation can be obtained by calling or writing the FEMA Clearance Officer, Linda Borror, (202) 646–2624, 500 C Street, SW., Washington, DC 20472.

Direct comments regarding the burden estimate or any aspect of this information collection, including suggestions for reducing this burden, to: the FEMA Clearance Officer at the above address; and to Gary Waxman, (202) 395–7340, Office of Management and Budget, 3235 New Executive Office Building, Washington, DC 20503 within four weeks of this notice.

Dated: July 30, 1990.

Wesley C. Moore,

Director, Office of Administrative Support.

[FR Doc. 90–18283 Filed 8–3–90; 8:45 am]

BILLING CODE 6718–01–M

Agency Information Collection Submitted to the Office of Management and Budget for Clearance

The Federal Emergency Management Agency (FEMA) has submitted to the Office of Management and Budget the following information collection package for clearance in accordance with the Paperwork Reduction Act (44 U.S.C. chapter 35).

Type: Revision of 3067–0142.

Title: Capability and Hazard Identification Program (CHIP) formerly the Hazard Identification, Capability Assessment and Multi-Year Development Plan (HICA/MYDP).

Abstract: The Federal Emergency Management Agency (FEMA) requires consistent information on the status of State and local emergency management capabilities, and the impact of FEMA funding on improving those capabilities. CHIP data is a nationwide baseline on State and local hazards, current capabilities, and resource requirements. FEMA uses the data to set program priorities, prepare FEMA budgets, allocate funds, and provide reports to Congress.

Type of Respondents: State and local governments.

Estimate of Total Annual Reporting and Recordkeeping Burden: 28,160.

Number of Respondents: States—56; Locals—3,100.

Estimated Average Burden Hours Per Response: States—60 hours; Locals—8 hours.

Frequency of Response: Annually.

Copies of the above information collection request and supporting documentation can be obtained by calling or writing the FEMA Clearance Officer, Linda Borror, (202) 646–2624, 500 C Street, SW., Washington, DC 20472.

Direct comments regarding the burden estimate or any aspect of this information collection, including suggestions for reducing this burden, to: the FEMA Clearance Officer at the above address; and to Gary Waxman, (202) 395–7340, Office of Management and Budget, 3235 New Executive Office Building, Washington, DC 20503 within four weeks of this notice.

Dated: July 27, 1990.

Wesley C. Moore,

Director, Office of Administrative Support.

[FR Doc. 90–18284 Filed 8–3–90; 8:45 am]

BILLING CODE 6718–01–M

[FEMA–873–DR]

Amendment to Notice of A Major Disaster Declaration; Nebraska

AGENCY: Federal Emergency Management Agency.

ACTION: Notice.

SUMMARY: This notice amends the notice of a major disaster for the State of Nebraska (FEMA–873–DR), dated July 4, 1990, and related determinations.

DATED: July 25, 1990.

FOR FURTHER INFORMATION CONTACT: Neva K. Elliott, Disaster Assistance Programs, Federal Emergency Management Agency, Washington, DC 20472 (202) 646–3614.

NOTICE: The notice of a major disaster for the State of Nebraska, dated July 4, 1990, is hereby amended to include the following areas among those areas determined to have been adversely affected by the catastrophe declared a major disaster by the President in his declaration of July 4, 1990:

Nance County for Individual Assistance and Public Assistance; and
The counties of Boone and Thayer for Public Assistance.

(Catalog for Federal Domestic Assistance No. 83.516, Disaster Assistance.)

Richard W. Krimm,

Acting Deputy Associate Director, State and Local Progams and Support, Federal Emergency Management Agency.

[FR Doc. 90–18285 Filed 8–3–90; 8:45 am]

BILLING CODE 6718–02–M

[FEMA–873–DR]

Amendment to Notice of A Major Disaster Declaration; Nebraska

AGENCY: Federal Emergency Management Agency.

ACTION: Notice.

SUMMARY: This notice amends the notice of a major disaster for the State of Nebraska (FEMA–873–DR), dated July 4, 1990, and related determinations.

DATED: July 27, 1990.

FOR FURTHER INFORMATION CONTACT: Neva K. Elliott, Disaster Assistance Programs, Federal Emergency Management Agency, Washington, DC 20472 (202) 646–3614.

NOTICE: Notice is hereby given that the **Federal Register** Notice dated July 8, 1990, closing the incident period for this disaster is rescined, and the incident period is reopened.

(Catalog of Federal Domestic Assistance No. 83.516, Disaster Assistance.)

Grant C. Peterson,

Associate Director, State and Local Programs and Support Federal Emergency Management Agency.

[FR Doc. 90–18286 Filed 8–3–90; 8:45 am]

BILLING CODE 6718–02–M

[FEMA–873–DR]

AGENCY: Federal Emergency Management Agency.

ACTION: Notice.

SUMMARY: This notice amends the notice of a major disaster for the State of Nebraska (FEMA–873–DR), dated July 4, 1990, and related determinations.

DATES: July 27, 1990.

FOR FURTHER INFORMATION CONTACT: Neva K. Elliott, Disaster Assistance Programs, Federal Emergency Management Agency, Washington, DC 20472 (202) 646–3614.

NOTICE: The notice of a disaster for the State of Nebraska, dated July 4, 1990, is hereby amended to include the following areas among those areas determined to have been adversely affected by the catastrophe declared a major disaster by the President in his declaration of July 4, 1990:

Clay County for Individual Assistance and Public Assistance.

(Catalog of Federal Domestic Assistance No. 83.516, Disaster Assistance.)

Grant C. Peterson,

Associate Director, State and Local Programs and Support, Federal Emergency Management Agency.

[FR Doc. 90–18287 Filed 8–3–90; 8:45 am]

BILLING CODE 6718–02–M

[FEMA–875–DR]

Notice of Major Disaster and Related Determinations; Vermont

AGENCY: Federal Emergency Management Agency.

ACTION: Notice.

SUMMARY: This is a notice of the Presidential declaration of a major disaster for the State of Vermont (FEMA–875–DR), dated July 25, 1990, and related determinations.

DATED: July 25, 1990.

FOR FURTHER INFORMATION CONTACT: Neva K. Elliott, Disaster Assistance Programs, Federal Emergency Management Agency, Washington, DC 20472 (202) 646–3614.

NOTICE: Notice is hereby given that, in a letter dated July 25, 1990, the President declared a major disaster under the authority of the Robert T. Stafford Disaster Relief and Emergency Assistance Act (42 U.S.C. 5121 *et seq.*, Public Law 93–288, as amended by Public Law 100–707), as follows:

I have determined that the damage in certain areas of the State of Vermont, resulting from severe storms and flooding on July 4–5, 1990, is of sufficient severity and magnitude to warrant a major disaster declaration under the Robert T. Stafford Disaster Relief and Emergency Assistance Act ("the Stafford Act"). I, therefore, declare that such a major disaster exists in the State of Vermont.

In order to provide Federal assistance, you are hereby authorized to allocate from funds available for these purposes, such amounts as you find necessary for Federal disaster assistance and administrative expenses.

You are authorized to provide Public Assistance in the designated areas. Consistent with the requirement that Federal assistance be supplemental, any Federal funds provided under the Stafford Act of Public Assistance will be limited to 75 percent of the total eligible costs.

The time period prescribed for the implementation of section 310(a), Priority to Certain Applications for Public Facility and Public Housing Assistance, shall be for a period not to exceed six months after the date of this declaration.

Notice is hereby given that pursuant to the authority vested in the Director of the Federal Emergency Management Agency under Executive Order 12148, and redelegated to me, I hereby appoint Edward A. Thomas of the Federal Emergency Management Agency to act as the Federal Coordinating Officer for this declared disaster.

I do hereby determine the following areas of the State of Vermont to have been affected adversely by this declared major disaster:

The counties of Caledonia, Chittenden, Franklin, Lamoille, and Washington for Public Assistance only.

(Catalog of Federal Domestic Assistance No. 83.516, Disaster Assistance.)

Jerry D. Jennings,

Acting Director, Federal Emergency Management Agency.

[FR Doc. 90–18288 Filed 8–3–90; 8:45 am]

BILLING CODE 6718–02–M

[FEMA–874–DR]

Amendment to Notice of a Major Disaster Declaration; Wisconsin

AGENCY: Federal Emergency Management Agency.

ACTION: Notice.

SUMMARY: This notice amends the notice of a major disaster for the State of Wisconsin (FEMA–874–DR), dated July 13, 1990, and related determinations.

DATES: July 25, 1990.

FOR FURTHER INFORMATION CONTACT: Neva K. Elliott, Disaster Assistance Programs, Federal Emergency Management Agency, Washington, DC 20472 (202) 646–3614.

NOTICE: The notice of a major disaster for the State of Wisconsin, dated July 13, 1990, is hereby amended to include the following areas among those areas determined to have been adversely affected by the catastrophe declared a major disaster by the President in his declaration of July 13, 1990:

Outagamie County for Individual Assistance and Public Assistance.

(Catalog of Federal Domestic Assistance No. 83.516, Disaster Assistance.)

Grant C. Peterson,

Associate Director, State and Local Programs and Support, Federal Emergency Management Agency.

[FR Doc. 90–18289 Filed 8–3–90; 8:45 am]

BILLING CODE 6718–02–M

FEDERAL MARITIME COMMISSION

Notice of Agreement(s) Filed

The Federal Maritime Commission hereby gives notice of the filing of the following agreement(s) pursuant to section 5 of the Shipping Act of 1984.

Interested parties may inspect and obtain a copy of each agreement at the Washington, DC Office of the Federal Maritime Commission, 1100 L Street NW., room 10220. Interested parties may submit comments on each agreement to the Secretary, Federal Maritime Commission, Washington, DC 20573, within 10 days after the date of the **Fedeal Register** in which this notice appears. The requirements for comments are found in § 572.603 of title 46 of the Code of Federal Regulations. Interested persons should consult this section before communicating with the Commission regarding a pending agreement.

Agreement No: 224–010968–007.

Title: Maryland Port Administration and Hapag-Lloyd AG/Atlantic Division Terminal Agreement.

Parties: Maryland Port Administration Hapag-Lloyd AG/Atlantic Division.

Synopsis: The Agreement amends the parties' basic agreement to provide for extending the agreement on a month-to-month basis for an additional three months beginning August 9, 1990, pending the final negotiations of a long term lease between the parties.

By Order of the Federal Maritime Commission.

Dated: July 31, 1990.

Joseph C. Polking,

Secretary.

[FR Doc. 90–18201 Filed 8–3–90; 8:45 am]

BILLING CODE 6730–01–M

Notice of Agreement(s) Filed

The Federal Maritime Commission hereby gives notice of the filing of the following agreement(s) pursuant to section 5 of the Shipping Act of 1984.

Interested parties may inspect and obtain a copy of each agreement at the Washington, DC Office of the Federal Maritime Commission, 1100 L Street, NW., Room 10325. Interested parties may submit comments on each agreement to the Secretary, Federal Maritime Commission, Washington, DC 20573, within 10 days after the date of the **Federal Register** in which this notice appears. The requirements for comments are found in § 572.603 of title 46 of the Code of Federal Regulations. Interested persons should consult this section before communicating with the Commission regarding a pending agreement.

Agreement No.: 202–011296.

Title: Norbel Service Agreement.

Parties: n.v. CMB s.a. Norsul Internacional S.A.

Synopsis: The proposed Agreement would authorize the parties to exchange information and discuss, agree upon and establish rates, charges, rules and practices in the trade between U.S. West Coast ports and points and ports and points in Central and South America. The Agreement would also authorize the parties to charter space on each other's vessels, jointly schedule their vessels and market their services. The parties would also share equally their expenses and revenues. The Agreement would not authorize a common tariff except where the parties may be members of a conference.

By Order of the Federal Maritime Commission.

Dated: July 31, 1990.

Joseph C. Polking,

Secretary.

[FR Doc. 90–18202 Filed 8–3–90; 8:45 am]

BILLING CODE 6730–01–M

FEDERAL RESERVE SYSTEM

Button Gwinnett Bancorp, Inc., et al.; Formations of; Acquisitions by; and Mergers of Bank Holding Companies

The companies listed in this notice have applied for the Board's approval under section 3 of the Bank Holding Company Act (12 U.S.C. 1842) and § 225.14 of the Board's Regulation Y (12 CFR 225.14) to become a bank holding company or to acquire a bank or bank holding company. The factors that are considered in acting on the applications are set forth in section 3(c) of the Act (12 U.S.C. 1842(c)).

Each application is available for immediate inspection at the Federal Reserve Bank indicated. Once the application has been accepted for processing, it will also be available for inspection at the offices of the Board of Governors. Interested persons may express their views in writing to the Reserve Bank or to the offices of the Board of Governors. Any comment on an application that requests a hearing must include a statement of why a written presentation would not suffice in lieu of a hearing, identifying specifically any questions of fact that are in dispute and summarizing the evidence that would be presented at a hearing.

Unless otherwise noted, comments regarding each of these applications must be received not later than August 30, 1990.

A. Federal Reserve Bank of Atlanta (Robert E. Heck, Vice President) 104 Marietta Street, NW., Atlanta, Georgia 30303:

1. *Button Gwinnett Bancorp, Inc.,* Norcross, Georgia; to become a bank holding company by acquiring 100 percent of the voting shares of Button Gwinnett Savings Bank, FSB, Norcross, Georgia.

2. *Soperton Naval Stores, Inc.,* Soperton, Georgia; to retain 8.86 percent of the voting shares of Soperton Bancshares, Inc., Soperton, Georgia, and thereby indirectly acquire Bank of Soperton, Soperton, Georgia. Applicant also has applied to acquire an additional 4.0 percent of Soperton.

B. Federal Reserve Bank of St. Louis (Randall C. Sumner, Vice President) 411 Locust Street, St. Louis, Missouri 63166:

1. *Decatur Bancshares, Inc.,* Decatur, Arkansas; to become a bank holding company by acquiring 76.3 percent of the voting shares of Decatur State Bank, Decatur, Arkansas.

2. *Landmark Bancshares Corporation,* St. Louis, Missouri; to acquire Pembroke Bancshares, Inc., Kansas City, Missouri; and Union Bancshares, Inc., Kansas City, Missouri, and thereby indirectly acquire Union Bank, Kansas City, Missouri.

C. Federal Reserve Bank of Minneapolis: (James M. Lyon, Vice President) 250 Marquette Avenue, Minneapolis, Minnesota 55480:

1. *Bank of Montana System,* Great Falls, Montana; to acquire 100 percent of the voting shares of Toole County State Bank, Shelby, Montana.

2. *Rocky Mountain Bancorporation, Inc.,* Billings, Montana; to merge with Whitehall Bancorporation, Inc., Billings, Montana, and thereby indirectly acquire The Whitehall State Bank, Whitehall, Montana; and The Harlem Corporation, Billings, Montana, and thereby indirectly acquire Security State Bank, Harlem, Montana, and The First State Bank of Stevensville, Stevensville, Montana.

D. Federal Reserve Bank of San Francisco (Kenneth R. Binning, Assistant Vice President) 101 Market Street, San Francisco, California 94105:

1. *Pacific Capital Bancorp,* Salinas, California; to acquire 100 percent of the voting shares of Pajaro Valley Bancorporation, Watsonville, California, and thereby indirectly acquire Pajaro Valley Bank, N.A., Watsonville, California.

Board of Governors of the Federal Reserve System, July 31, 1990.

Jennifer J. Johnson,

Associate Secretary of the Board.

[FR Doc. 90–18236 Filed 8–3–90; 8:45 am]

BILLING CODE 6210–01–M

First Eastern Corporation, et al.; Applications To Engage de Novo in Permissible Nonbanking Activities

The companies listed in this notice have filed an application under § 225.23(a)(1) of the Board's Regulation Y (12 CFR 225.23(a)(1)) for the Board's approval under section 4(c)(8) of the Bank Holding Company Act (12 U.S.C. 1843(c)(8)) and § 225.21(a) of Regulation Y (12 CFR 225.21(a)) to commence or to engage *de novo,* either directly or through a subsidiary, in a nonbanking activity that is listed in § 225.25 of Regulation Y as closely related to banking and permissible for bank holding companies. Unless otherwise noted, such activities will be conducted throughout the United States.

Each application is available for immediate inspection at the Federal Reserve Bank indicated. Once the application has been accepted for processing, it will also be available for inspection at the offices of the Board of Governors. Interested persons may express their views in writing on the question whether consummation of the proposal can "reasonably be expected to produce benefits to the public, such as greater convenience, increased competition, or gains in efficiency, that outweight possible adverse effects, such as undue concentration of resources, decreased or unfair competition, conflicts of interests, or unsound banking practices." Any request for a hearing on this question must be accompanied by a statement of the reasons a written presentation would not suffice in lieu of a hearing, identifying specifically any questions of fact that are in dispute, summarizing the evidence that would be presented at a hearing, and indicating how the party commenting would be aggrieved by approval of the proposal.

Unless otherwise noted, comments regarding the applications must be received at the Reserve Bank indicated

or the offices of the Board of Governors not later than August 30, 1990.

A. **Federal Reserve Bank of Philadelphia** (Thomas K. Desch, Vice President), 100 North 6th Street, Philadelphia, Pennsylvania 19105:

1. *First Eastern Corporation,* Wilkes-Barre, Pennsylvania; to engage *de novo* through its subsidiary, First Eastern Investment Company, Wilmington, Delaware, in making, acquiring, or servicing loans or other extensions of credit for the company's account or for the account of others pursuant to section 225.25(b)(1) of the Board's Regulation Y.

B. **Federal Reserve Bank of Richmond** (Lloyd W. Bostian, Jr., Vice President), 701 East Byrd Street, Richmond, Virginia 23261:

1. *Harvest Bancorp, Inc.,* Hamilton, Virginia; to engage *de novo* in making loans and extensions of credit pursuant to section 225.25(b)(1) of the Board's Regulation Y. These activities will be conducted in the Commonwealth of Virginia.

C. **Federal Reserve Bank of Atlanta** (Robert E. Heck, Vice President), 104 Marietta Street, NW., Atlanta, Georgia 30303:

1. *Avantor Financial Corporation,* Atlanta, Georgia; Bank South Corporation, Atlanta, Georgia; Barnett Banks, Inc., Jacksonville, Florida; The Citizens and Southern Corporation, Atlanta, Georgia; First Florida Banks, Inc., Tampa, Florida; Southeast Banking Corporation, Miami, Florida; SunTrust Banks, Inc., Atlanta, Georgia; Synovus Financial Corp., Columbus, Georgia; and TB&C Bancshares, Inc., Columbus, Georgia; to engage *de novo* through its subsidiary, Southeast Switch, Inc., Maitland, Florida, in offering and providing data processing and transmission services pursuant to § 225.25(b)(7); and providing consulting services to member and non-member depository institutions pursuant to § 225.25(b)(11) of the Board's Regulation Y.

Board of Governor of the Federal Reserve System, July 31, 1990.

Jennifer J. Johnson,

Associate Secretary of the Board.

[FR Doc. 90-18237 Filed 8-3-90; 8:45 am]

BILLING CODE 6210-01-M

First Western Bancorp, Inc., et al.; Acquisitions of Companies Engaged in Permissible Nonbanking Activities

The organizations listed in this notice have applied under § 225.23 (a)(2) or (f) of the Board's Regulation Y (12 CFR 225.23 (a)(2) or (f)) for the Board's approval under section 4(c)(8) of the Bank Holding Company Act (12 U.S.C. 1843(c)(8)) and § 225.21(a) of Regulation Y (12 CFR 225.21(a)) to acquire or control voting securities or assets of a company engaged in a nonbanking activity that is listed in § 225.25 of Regulation Y as closely related to banking and permissible for bank holding companies. Unless otherwise noted, such activities will be conducted throughout the United States.

Each application is available for immediate inspection at the Federal Reserve Bank indicated. Once the application has been accepted for processing, it will also be available for inspection at the offices of the Board of Governors. Interested persons may express their views in writing on the question whether consummation of the proposal can "reasonably be expected to produce benefits to the public, such as greater convenience, increased competition, or gains in efficiency, that outweigh possible adverse effects, such as undue concentration of resources, decreased or unfair competition, conflicts of interests, or unsound banking practices." Any request for a hearing on this question must be accompanied by a statement of the reasons a written presentation would not suffice in lieu of a hearing, identifying specifically any questions of fact that are in dispute, summarizing the evidence that would be presented at a hearing, and indicating how the party commenting would be aggrieved by approval of the proposal.

Unless otherwise noted, comments regarding each of these applications must be received at the Reserve Bank indicated for the application or the offices of the Board of Governors not later than August 30, 1990.

A. **Federal Reserve Bank of Cleveland** (John J. Wixted, Jr., Vice President) 1455 East Sixth Street, Cleveland, Ohio 44101:

1. First Western Bancorp, Inc., New Castle, Pennsylvania; to acquire First Federal of Western Pennsylvania, Sharon, Pennsylvania, and thereby engage in savings and loan activities pursuant to section 225.25(b)(9) of the Board's Regulation Y.

B. **Federal Reserve Bank of Atlanta** (Robert E. Heck, Vice President) 104 Marietta Street, NW., Atlanta, Georgia 30303:

1. SunTrust Banks, Inc., Atlanta, Georgia, and Trust Company of Georgia, Atlanta, Georgia; to acquire Anchor Savings Bank FSB, Atlanta, Georgia, and thereby engage in operating a savings association pursuant to § 225.25(b)(9) of the Board's Regulation Y. These activities will be conducted in the State of Georgia.

C. **Federal Reserve Bank of Minneapolis** (James M. Lyon, Vice President) 250 Marquette Avenue, Minneapolis, Minnesota 55480:

1. Norwest Corporation, Minneapolis, Minnesota; to acquire Abramson-Nault-Kreager-Oas Agency, Inc., Duluth, Minnesota, and thereby engage in offering and selling life, accident, and health, property and casualty insurance products underwritten by various insurance companies pursuant to § 225.25(b)(8)(vii) of the Board's Regulation Y. Comments on this application must be received by August 20, 1990!

D. **Federal Reserve Bank of Kansas City** (Thomas M. Hoenig, Vice President) 925 Grand Avenue, Kansas City, Missouri 64198:

1. Sooner Southwest Bancshares, Inc., Bristow, Oklahoma; to acquire Southwest Consolidated Life Insurance Company, Phoenix, Arizona, and thereby engage in providing credit related life, and accident and health reinsurance for its three subsidiary banks through Southwest Consolidated pursuant to § 225.25(b)(8)(i) of the Board's Regulation Y.

Board of Governors of the Federal Reserve System, July 31, 1990.

Jennifer J. Johnson,

Associate Secretary of the Board.

[FR Doc. 90-18238 Filed 8-3-90; 8:45 am]

BILLING CODE 6210-01-M

The Industrial Bank of Japan, Ltd.; Acquisition of Company Engaged in Nonbanking Activities

The organization listed in this notice has applied under § 225.23 (a) or (f) of the Board's Regulation Y (12 CFR 225.23 (a) or (f)) for the Board's approval under section 4(c)(8) of the Bank Holding Company Act (12 U.S.C. 1843(c)(8)) and § 225.21(a) of Regulation Y (12 CFR 225.21(a)) to acquire or control voting securities or assets of a company engaged in a nonbanking activity. Unless otherwise noted, such activities will be conducted throughout the United States.

The application is available for immediate inspection at the Federal Reserve Bank indicated. Once the application has been accepted for processing, it will also be available for inspection at the offices of the Board of Governors. Interested persons may express their views in writing on the question whether consummation of the proposal can "reasonably be expected to produce benefits to the public, such as greater convenience, increased competition, or gains in efficiency, that

outweigh possible adverse effects, such as undue concentration of resources, decreased or unfair competition, conflicts of interests, or unsound banking practices." Any request for a hearing on this question must be accompanied by a statement of the reasons a written presentation would not suffice in lieu of a hearing, identifying specifically any questions of fact that are in dispute, summarizing the evidence that would be presented at a hearing, and indicating how the party commenting would be aggrieved by approval of the proposal.

Comments regarding the application must be received at the Reserve Bank indicated or the offices of the Board of Governors not later than August 30, 1990.

A. Federal Reserve Bank of New York (William L. Rutledge, Vice President) 33 Liberty Street, New York, New York 10045:

1. *The Industrial Bank of Japan, Ltd.*, Tokyo, Japan; to engage *de novo* in providing advice to nonaffiliated financial and nonfinancial institutions in connection with merger, acquisition, divestiture and financing transactions; furnishing valuation services for institutional customers; and rendering fairness opinions in connection with merger, acquisition and similar transactions. *Sovran Financial Corporation*, 73 Federal Reserve Bull. 744 (1987).

Board of Governors of the Federal Reserve System, July 31, 1990.

Jennifer J. Johnson,

Associate Secretary of the Board.

[FR Doc. 90-18239 Filed 8-3-90; 8:45 am]

BILLING CODE 6210-01-M

DEPARTMENT OF HEALTH AND HUMAN SERVICES

Alcohol, Drug Abuse, and Mental Health Administration

Substance Abuse Prevention Conference Grants

OFFICE: Office for Substance Abuse Prevention, HHS.

ACTION: Program announcement.

The Office for Substance Abuse Prevention (OSAP) is reannouncing the following grant program:

Substance Abuse Prevention Conference Grants

Under the authority of section 508 of the Public Health Service Act, OSAP will accept applications to support domestic conferences from public and private, profit and not for profit entities for the purpose of coordinating, exchanging, and disseminating information in furtherance of OSAP's mission to prevent alcohol and other drug abuse, particularly as it pertains to high risk youth. Applications are invited for regional and national conferences relating to substance abuse prevention, including conferences for the purposes of information dissemination to the services community and the general public, and national strategy development for substance abuse prevention. Approximately $2 million will be available for constituency-initiated conferences in FY 1991. Awards will be limited to no more than $50,000 for any one conference. The Catalog of Federal Domestic Assistance number for this program is 13.174.

OSAP will accept applications in response to this announcement under the receipt dates of November 15, 1990, April 24, 1991, and on October 1 and February 1 thereafter.

Application kits including a copy of the complete program announcement and guidance for submission are available from: National Clearinghouse for Alcohol and Drug Information (NCADI), P.O. Box 2345, Rockville, MD 20852, (301) 468-2600.

For additional information regarding the program and/or application procedures, contact: Budget, Planning, and Evaluation Unit, Office for Substance Abuse Prevention, ADAMHA, Rockwall II Building, 5600 Fishers Lane, Rockville, MD 20857, (301) 443-6980.

Joseph R. Leone,

Associate Administrator for Management, Alcohol, Drug Abuse, and Mental Health Administration.

[FR Doc. 90-18194 Filed 8-3-90; 8:45 am]

BILLING CODE 4160-20-M

Food and Drug Administration

[Docket No. 90C-0221]

Concept, Inc.; Filing of Color Additive Petition

AGENCY: Food and Drug Administration.

ACTION: Notice.

SUMMARY: The Food and Drug Administration (FDA) is announcing that Concept, Inc., has filed a petition proposing that the color additive regulations be amended to provide for the safe use of D&C Violet No. 2 to color poly(ϵ-caprolactone) absorbable sutures for general surgery.

FOR FURTHER INFORMATION CONTACT: Sandra L. Varner, Center for Food Safety and Applied Nutrition (HFF-335), Food and Drug Administration, 200 C St. SW., Washington, DC. 20204, 202-472-5690.

SUPPLEMENTARY INFORMATION: Under the Federal Food, Drug, and Cosmetic Act (sec. 706(d)(1) (21 U.S.C. 376(d)(1))), notice is given that a petition (CAP OCO224) has been filed by Concept, Inc., 11311 Concept Blvd., Largo, FL 34643, proposing that § 74.3602 *D&C Violet No. 2* (21 CFR 74.3602) of the color additive regulations be amended to provide for the safe use of D&C Violet No. 2 to color poly(ϵ-caprolactone) absorbable sutures for general surgery.

The potential environmental impact of this action is being reviewed. If the agency finds that an environmental impact statement is not required and this petition results in a regulation, the notice of availability of the agency's finding of no significant impact and the evidence supporting that finding will be published with the regulation in the **Federal Register** in accordance with 21 CFR 25.40(c).

Dated: July 30, 1990.

Fred R. Shank,

Director, Center for Food Safety and Applied Nutrition.

[FR Doc. 90-18189 Filed 8-3-90; 8:45 am]

BILLING CODE 4160-01-M

Office of Human Development Services

Agency Information Collection Under OMB Review

AGENCY: Office of Human Development Services. HHS.

ACTION: Notice.

Under the provisions of the Paperwork Reduction Act (44 U.S.C. chapter 35), the Office of Human Development Services (OHDS) has submitted to the Office of Management and Budget (OMB) a request for approval of information collection for the Administration on Aging's Program Performance Report, title VI of the Older Americans Act (Grants for Native Americans for Supportive and Nutritional Services).

ADDRESSES: Copies of the information collection request may be obtained from Larry Guerrero, OHDS Reports Clearance Officer, by calling (202) 245-6275.

Written comments and questions regarding the requested approval for information collection should be sent directly to: Angela Antonelli, OMB Desk Officer for OHDS, OMB Reports Management Branch, New Executive Office Building, Room 3002, 725 17th

Street NW., Washington, DC 20503, (202) 395–7316.

Information on Document

Title: Program Performance Report, title VI of the Older Americans Act (Grants for Native Americans for Supportive and Nutritional Services).

OMB No.: 0980–0120.

Description: Section 614(a)(3) of the Older Americans Act states that an application for a grant under title VI, part A, shall "provide that the tribal organization will make such reports and containing such information, as the Commissioner may reasonably require, and comply with such requirements as the Commissioner may impose to assure the correctness of such reports." The Older Americans Act Amendments of 1987 added a part B to title VI, "Native Hawaiian Program."

The Program Performance Report provides a data base for the Administration on Aging to: (a) monitor program operations, growth and output; (b) establish program policy and direction; and (c) prepare responses to Congress and public and private agencies.

Annual Number of Respondents: 889.

Annual Frequency: 1.

Average Burden Hours Per Response: 46 mins.

Total Burden Hours: 751.

Dated: July 27, 1990.

Mary Sheila Gall,

Assistant Secretary for Human Development Services.

[FR Doc. 90–18188 Filed 8–3–90; 8:45 am]

BILLING CODE 4130–01–M

Public Health Service

Agency for Health Care Policy and Research; Assistance of Medical Technology

The Public Health Service's (PHS) Agency for Health Care Policy and Research, through the Office of Health Technology Assessment (OHTA), announced on November 14, 1989 that it is performing an assessment of the safety, clinical effectiveness, and indications for use of cardiac rehabilitation program services for percutaneous transluminal coronary angioplasty (PTCA) and cardiac valve surgery patients **Federal Register** Vol. 54, No. 218:47411). The assessment is currently underway.

In this notice, OHTA announces that it is also including the subgroup of cardiac transplant patients in the assessment. Specifically, we are interested in knowing whether there are significant advantages of cardiac rehabilitation program services for cardiac transplant patients. If these services prove to be safe and clinically effective, what are the specific indications for their use and how many courses of therapy are reasonable and necessary?

The PHS assessment consists of a synthesis of published literature and information obtained from appropriate organizations in the private sector and from OS agencies and others in the Federal Government. PHS assessments are based on the most current knowledge concerning the safety, clinical effectiveness, and appropriate uses of a technology. Based on this assessment a PHS recommendation will be formulated to assist the Health Care Financing Administration (HCFA) in establishing Medicare coverage policy. The information being sought is a review and assessment of past, current, and planned research related to this technology, as well as a bibliography of published, controlled clinical trials and other well designed clinical studies. Information related to the characterization of the patient population most likely to benefit, as well as on the clinical acceptability and effectiveness of this technology and extent of use is also being sought. Any person or group wishing to provide OHTA with information relevant to this assessment should do so in writing no later than October 30, 1990 or 90 days from the date of publication of this notice.

For purposes of evaluation by the interested scientific community, it is helpful to include attributions for the comments cited in OHTA assessments. In addition, information submitted in response to notices such as this is often requested by interested individuals or groups. Without a written consent, the names of individuals or other information that might result in the identification of individuals who provide comments will not be disclosed and will be kept confidential in accordance with 42 U.S.C. 299a–1(c) and title IX of the Public Health Service Act, section 903(c). Please indicate as part of the response whether disclosure is acceptable.

Written material should be submitted to: Drector, Office of Health Technology Assessment, Agency for Health Care Policy and Research, 5600 Fishers Lane, Room 18–40, Rockville, Maryland 20857, (301) 443–4990.

Dated: July 26, 1990.

T. Holohan,

Director, Office of Health Technology Assessment, Agency for Health Care Policy and Research.

[FR Doc. 90–18204 Filed 8–3–90; 8:45 am]

BILLING CODE 4160–90–M

Social Security Administraton

Social Security Ruling; Evaluation of Pain and Other Symptoms

AGENCY: Social Security Administration, HHS.

ACTION: Notice of Social Security Ruling.

SUMMARY: In accordance with 20 CFR 422.406(b)(1), the Commissioner of Social Security gives notice of Social Security Ruling SSR 90–1p. This Ruling concerns the standard of the United States Court of Appeals for the Fourth Circuit in evaluating claims for Social Security and Supplemental Security Income benefits based on disability which involve allegations of pain.

EFFECTIVE DATE: August 6, 1990.

FOR FURTHER INFORMATION CONTACT: John W. Modler, Officer of Regulations, Social Security Administration, 6401 Security Boulevard, Baltimore, MD 21235, (301) 965–1713.

SUPPLEMENTARY INFORMATION: Although not required to do so pursuant to 5 U.S.C. 552(a)(1) and (a)(2), we are publishing this Social Security Ruling in accordance with 20 CFR 422.406(b)(1).

Social Security Rulings make available to the public precedential decisions relating to the Federal old-age, survivors, disability, supplemental security income, and black lung benefits programs. Social Security Rulings are based on case decisions made at all administrative levels of adjudication, Federal court decisions, Commissioner's decisions, opinions of the Office of the General Counsel, and other policy interpretations of the law and regulations.

Although Social Security Rulings do not have the force and effect of law or regulations, they are binding on all components of the Social Security Administration, in accordance with 20 CFR 422.406(b)(1), and are to be relied upon as precedents in adjudicating other cases.

If this Social Security Ruling is later superseded, modified, or rescinded, we will publish a notice in the **Federal Register** to that effect.

(Catalog of Federal Domestic Assistance Programs Nos. 13.802 Social Security—Disability Insurance; 13.803 Social Security—Retirement Insurance; 13.805 Social Security—Survivor's Insurance; 13.806—Special Benefits for Disabled Coal Miners; 13.807—Supplemental Security Income.)

Dated: July 15, 1990.

Gwendolyn S. King,

Commissioner of Social Security.

POLICY INTERPRETATION RULING

Titles II and XVI: Evaluation of Pain and Other Symptoms

This Ruling supersedes, only in States within the Fourth Circuit (North Carolina, South Carolina, Maryland, Virginia and West Virginia), Social Security Ruling (SSR) 88–13, Titles II and XVI: Evaluation of Pain and Other Symptoms.

Purpose: The purpose of this interpretive Ruling is to supersede SSR 88–13 in the Fourth Circuit and to transmit to adjudicators the Fourth Circuit's standard on the evaluation of pain. In a recent decision in *Hyatt* v. *Sullivan,* the Court of Appeals for the Fourth Circuit found that SSR 88–13 was consistent with Fourth Circuit law. However, the court was concerned that some adjudicators could have read SSR 88–13 in a manner inconsistent with circuit precedent, because the instruction not only contained some language from the obsoleted SSR 82–58 (which in part had been earlier held invalid by the court) but also because it was a reiteration of certain aspect of the policy on the evaluation of pain and other symptoms that the court previously had invalidated.

Therefore, the Court of Appeals held that in order to conform with Fourth Circuit law, the Social Secuirty Administration (SSA) must issue instructions clearly expressing the circuit rule regarding pian (i.e., that objective findings of the pain's intensity, persistence and effect on an individual's work capacity are not required to find disability) to eliminate possible confusion on the part of adjudicators. To this end, the court held that SSA could amend SSR 88–13, "to make it clear that it is not a reiteration of previous policy and that it has a more current effective date." This Ruling, which simply amends the purpose and effective date sections of SSR 88–13, is designed to comply with the court's order in the Hyatt case.

Fourth Curcuit Standard: Once an underlying physical or mental impairment that could reasonably be expected to cause pain is shown by medically acceptable objective evidence, such as clinical or laboratory diagnostic techniques, the adjudicator must evaluate the disabling effects of a disability claimant's pain, even though its intensity or severity is shown only by subject evidence. If an underlying impairment capable of causing pain is shown, subjective evidence of the pain, its intensity or degree can, by itself, support a finding of disability. Objective medical evidence of pain, its intensity or degree (i.e., manifestations of the functional effects of pain such as deteriorating nerve or muscle tissue, muscle spasm, or sensory or motor disruption), if available, should be obtained and considered. Because pain is not readily susceptible of objective proof, however, the absence of objective medical evidence of the intensity, severity, degree or functional effect of pain is not determinative.

Citations (Authority): Sections 223(d), 216(i), and 1614(a) of the Social Security Act, as amended; Regulations No. 4, §§ 404.1508, 404.1528, and 404.1529; and Regulations No. 16 §§ 416.908, 416.928, and 416.929.

Introduction: Symptoms such as pain, shortness of breath, weakness, or nervousness are the individual's own perceptions of the effects of a physical or mental impairment(s). Because of their subjective characteristics and the absence of reliable techniques for measurement, symptoms (especially pain) are difficult to prove, disprove, or quantify. This policy interpretation explains the need for a sound medical basis for the disability decision and emphasizes the importance of the consideration to be given to symptoms in the evaluation of impairment severity and functional limitation.

Policy Interpretation: Proper consideration of the effect of pain and other symptoms on an individual's ability to work is an important part of the disability evaluation process. Because pain is subjective and not susceptible to measurement by reliable techniques, the existence of pain and the extent to which pain affects the individual's functional ability to do basic work activities are difficult to evaluate.

Need to Establish a Medically Determinable Impairment

Pain cannot be found to have a significant effect on a disability determination or decision unless medical signs or laboratory findings show that a medically determinable physical or mental impairment is present that could reasonably be expected to produce the pain alleged.

When medical signs and laboratory findings do not substantiate any physical impairment capable of producing the alleged pain (and a favorable determination cannot be made on the basis of the total record), the possibility of a mental impairment as the basis for the pain should be investigated.

Consideration of Pain in Establishing the Severity of a Medically Determinable Impairment

Once a medically determinable physical or mental impairment is documented, the effects of pain must be considered at each step of the sequential evaluation process.

1. Is the Condition Severe?

To be found disabled, an individual must have a medically determinable severe impairment(s). To be considered severe, the impairment or combination of impairments must have more than a minimal effect on the individual's physical or mental abilities to do basic work activities. In determining whether an impairment(s) is severe, full consideration is to be given to all material evidence, including signs, symptoms (such as pain), and laboratory findings. Objective findings may confirm that the individual has a severe impairment. If they do not, the degree of pain must be considered. Where the degree of pain reported is reasonably consistent with the objective medical evidence presented, the conclusion that the impairment is severe must be based on a detemination that the total evidence, including the alleged pain, establishes that the individual's ability to do basic work activities is affected to more than a minimal degree. However, where the degree of pain alleged is significantly greater than that which can be reasonably anticipated based on the objective physical findings, the adjudicator must carefully explore any additional limitation(s) imposed by the pain on the individual's functional ability beyond those limitations indicated by the objective medical evidence before any conclusions about severity can be reached.

2. Are the Findings About the Individual's Impairment Identical to Those in the Listing?

Disabilty may be established on a medical basis alone if the criteria of an impairment cited in the Listing of Impairments are met. Some listed impairments include symptoms among the requisite criteria. For example, Listing 1.04 requires a history of joint pain and stiffness. When a symptom, such as pain, appears as a criterion (as in Listing 1.04), it is ordinarily essential only that the symptom be present in combination with the remaining criteria. Unless specifically indicated (as in Listing 1.04A, which requires that abduction of both arms at the shoulders, including scapular motion, be restricted to less than 90 degrees), quantification or evaluation of the intensity or of the

functionally limiting effects of that symptom is not required to detemine whether the documented findings meet the requisite criteria.

3. Are the Findings About the Individual's Impairment(s) Equivalent to Those for an Impairment(s) in the Listing?

In considering whether documented findings and symptoms are of equivalent severity to the requisite findings and symptoms of a listed impairment, look to see whether the set of symptoms, signs, and findings present are of equal or greater significance than those in the listed criteria. However, an alleged or reported increase in the intensity of a symptom cannot be substituted no matter how severe, for a missing or deficient sign or finding to elevate impairment severity to equivalency to the listed impairment. For example, a history of severe, persistent joint pain cannot be substituted for the required x-ray evidence of either joint space narrowing or bony destruction (with erosions or cysts) in Listing 1.04 to draw a conclusion of "equal."

Consideration of the Intensity and Persistence of Pain in Determining Functional Capacity

If the listing is not met or equaled, a residual functional capacity (RFC) assessment is necessary to determine the effects of the impairment, including any additional limitations imposed by pain, on the claimant's capacity to perform former work or other work. Medical history and objective medical evidence such as evidence of muscle atrophy, reduced joint motion, muscle spasm, sensory and motor disruption, are usually reliable indicators from which to draw reasonable conclusions about the intensity and persistence of pain and the effect such pain may have on the individual's work capacity. Whenever available, this type of objective medical evidence must be obtained and must be considered in reaching a conclusion as to whether the individual is under a disability.

There are situations in which an individual's alleged or reported symptoms, such as pain, suggest the possibility of a greater restriction of the individual's ability to function than can be demonstrated by objective meidcal evidence alone. In such cases, reasonable conclusions as to any limitations on the individual's ability to do basic work activities can be derived from the consideration of other information in conjunction with medical evidence. This is consistent with court decisions which require that statements of the claimant or his/her physician as to the intensity and persistence of pain or other symptoms which may reasonably be accepted as consistent with the medical signs and laboratory findings are to be included in the evidence to be considered in making a disability determination.

When the claimant indicates that pain is a significant factor of his/her alleged inability to work, and the allegation is not supported by objective medical evidence in the file, the adjudicator shall obtain detailed descriptions of daily activities by directing specific inquiries about the pain and its effects to the claimant, his/her physicians from whom medical evidence is being requested, and other third parties who would be likely to have such knowledge.

In developing evidence of pain and other symptoms, it is essential to investigate all avenues presented that relate to subjective complaints, including the claimant's prior work record and information and observations by treating and examining physicians and third parties, regarding such matters as:

1. The nature, location, onset, duration, frequency, radiation, and intensity of any pain;
2. Precipitating and aggravating factors (e.g., movement, activity, environmental conditions);
3. Type, dosage, effectiveness, and adverse side-effects of any pain medication;
4. Treatment, other than medication, for relief of pain;
5. Functional restrictions; and
6. The claimant's daily activities.

Importance of Considering Allegations of Pain In Assessing RFC and Explaining Conclusions Reached

In evaluating a claimant's subjective complaints of pain, the adjudicator must give full consideration to all of the available evidence, medical and other, that reflects on the impairment and any attendant limitations of function.

The RFC assessment must describe the relationship between the medically determinable impairment and the conclusions of RFC which have been derived from the evidence, and must include a discussion of why reported daily activity restrictions are or are not reasonably consistent with the medical evidence.

In instances in which the adjudicator has observed the individual, the adjudicator is not free to accept or reject the individual's subjective complaints solely on the basis of such personal observations. Rather, in all cases in which pain is alleged, the determination or decision rationale is to contain a thorough discussion and analysis of the objective medical evidence and the nonmedical evidence, including the individual's subjective complaints and the adjudicator's personal observations. The rationale is then to provide a resolution of any inconsistencies in the evidence as a whole and set forth a logical explanation of the individual's capacity to work.

Effective Date: This Ruling is effective on publication in the **Federal Register**, but the policy explained herein applies to claims decided on or after July 20, 1988, the date of publication of SSR 88-13. This Ruleing is being reissued now to address concerns expressed in the Fourth Circuit's recent decision in *Hyatt* v. *Sullivan* that any prior Agency instructions on pain which may have been interpreted as contrary to the law of the Fourth Circuit must be disregarded.

[FR Doc. 90-18252 Filed 8-3-90; 8:45 am]
BILLING CODE 4195-11-M

DEPARTMENT OF HOUSING AND URBAN DEVELOPMENT

Office of the Secretary

[Docket No. N-90-3131]

Privacy Act of 1974; Proposed Amendment to a System of Records

AGENCY: Department of Housing and Urban Development.

ACTION: Notification of a proposed amendment to an existing system of records.

SUMMARY: The Department is giving notice that it intends to amend the following Privacy Act system of records: HUD/DEPT-32, Delinquent/Default/Assigned/Temporary Mortgage Assistance Payments (TMAP) Program.

EFFECTIVE DATE: This amendment shall become effective without further notice in 30 calendar days (September 5, 1990) unless comments are received on or before that date which would result in a contrary determination.

ADDRESSES: Rules Docket Clerk, Room 10276, Department of Housing and Urban Development, 451 Seventh Street SW., Washington, DC 20410.

FOR FURTHER INFORMATION CONTACT: Donna Eden, Departmental Privacy Act Officer, Telephone (202) 708-0050. (This is not a toll-free number.)

SUPPLEMENTARY INFORMATION: HUD/DEPT-32 contains records of debtors who defaulted on Single Family Mortgage Notes insured by the Department. At default, HUD takes over the mortgage note and begins collecting

payments monthly. The Deficit Reduction Act of 1984 provides for the collection and deposit of payments to executive agencies by electronic methods. One of these methods is the collection of debts by a preauthorized debit to a HUD debtor's account. This method is voluntary and can be effected when the account holder gives the agency the routing number of his/her financial institution and his/her individual account number. This information is then stored in the appropriate system and used on the payment date to create a tape listing of all financial institutions and accounts to be debited. The Department plans to allow for the collection of Single Family Mortgage Notes by a preauthorized debit to a debtor's account.

The amended portion of the system notice is set forth below. Previously, the system and a prefatory statement containing the general routine uses applicable to all of the Department's systems of records were published in the "Federal Register Privacy Act Issuances, 1987 Compilation, Volume II." A report, as required by 5 U.S.C. 552(a) of the Privacy Act, has been submitted to the Committee on Government Operations of the House of Representatives, the Committee on Government Affairs of the Senate, and the Office of Management and Budget (OMB) pursuant to paragraph 4b of Appendix I to OMB Circular No. A–130, "Federal Agency Responsibilities for Maintaining Records About Individuals," dated December 12, 1985 (50 FR 52730, December 24, 1985).

(5 U.S.C. 552a, 88 Stat. 1896: Sec. 7(d), Department of HUD Act (42 U.S.C. 3535(d))

Issued at Washington, DC, July 30, 1990.

Michael F. Hill,

Acting Assistant Secretary for Administration.

HUD/DEPT–32

SYSTEM NAME:

Delinquent/Default/Assigned/ Temporary Mortgage Assistance Payments (TMAP) Program.

* * * * *

CATEGORY OF RECORDS IN THE SYSTEM:

Notices of delinquent mortgages; requests for forbearance or assignment; forbearances or assignment reviews include data on mortgage amount and payments made, employment and income, financial institution names and routing numbers, mortgagor's account number, debts and expenses, reasons for delinquency, recommendations and actions on requests; credit reports; forbearance agreements; deeds of trust; and related correspondence.

[FR Doc. 90–18290 Filed 8–3–90; 8:45 am]

BILLING CODE 4210–32–M

Office of Administration

[Docket No. N–90–3130]

Notice of Submission of Proposed Information Collection to OMB

AGENCY: Office of Administration, HUD.

ACTION: Notice.

SUMMARY: The proposed information collection requirement described below has been submitted to the Office of Management and Budget (OMB) for reveiw, as required by the Paperwork Reduction Act. The Department is soliciting public comments on the subject proposal.

ADDRESSES: Interested persons are invited to submit comments regarding this proposal. Comments should refer to the proposal by name and shuld be sent to: Scott Jacobs, OMB Desk Officer, Office of Management and Budget, New Executive Office Building, Washington, DC 20503

FOR FURTHER INFORMATION CONTACT: David S. Cristy, Reports Management Officer, Department of Housing and Urban Development, 451 7th Street, Southwest, Washington, DC 20410, telephone (202) 708–0050. This is not a toll-free number. Copies of the proposed forms and other available documents submitted to OMB may be obtained from Mr. Cristy.

SUPPLEMENTARY INFORMATION: The Department has submitted the proposal for the collection of information, as described below, to OMB for review, as required by the Paperwork Reduction Act (44 U.S.C. Chapter 35).

The Notice lists the following information: (1) the title of the information collection proposal; (2) the office of the agency to collect the information; (3) the description of the need for the information and its proposed use; (4) the agency form number, if applicable; (5) what members of the public will be affected by the proposal; (6) how frequently information submissions will be required; (7) an estimate of the total number of hours needed to prepare the information submission including number of respondents, frequency of response, and hours of response; (8) whether the proposal is new or an extension, reinstatement, or revision of an information collection requirement; and (9) the names and telephone numbers of an agency official familiar with the proposal and of the OMB Desk Officer for the Department.

Authority: Section 3507 of the Paperwork Reduction Act, 44 U.S.C. 3507; Section 7(d) of the Department of Housing and Urban Development Act, 42 U.S.C. 3535(d).

Dated: July 27, 1990.

John T. Murphy,

Director, Information Policy and Management Division.

Proposal: Evaluation of Resident Management in Public Housing.

Office: Policy Development and Research.

Description of the Need for the Information and Its Proposed Use: The Housing and Community Development Act of 1987, Section 20(f), requires the Department to conduct an evaluation and assessment of resident management, including the effect of resident management and living conditions in public housing; and to submit to Congress a report setting forth the findings as a result of this evaluation and assessment, including any recommendations determined to be appropriate.

Form Number: None.

Respondents: Individuals or Households, State or Local Governments, and Non-Profit Institutions.

Frequency of Submission: One Time.

Reporting Burden:

	Number of respondents	×	Frequency of response	×	Hours per response	=	Burden hours
Annual Reporting	1,664		1		.539		897

Total Estimated Burden Hours: 897.
Status: New.
Contact: David Einhorn, HUD, (202) 708–0574; Scott Jacobs, OMB, (202) 395–6880.
Date: July 27, 1990.

[FR Doc. 90–18206 Filed 8–3–90; 8:45 am]
BILLING CODE 4210–01–M

[Docket No. N–90–3129]

Notice of Submission of Proposed Information Collection to OMB

AGENCY: Administration, HUD.

ACTION: Notice.

SUMMARY: The proposed information collection requirement described below has been submitted to the Office of Management and Budget (OMB) for review, as required by the Paperwork Reduction Act. The Department is soliciting public comments on the subject proposal.

ADDRESSES: Interested persons are invited to submit comments regarding this proposal. Comments should refer to the proposal by name and should be sent to: Scott Jacobs, OMB Desk Officer, Office of Management and Budget, New Executive Office Building, Washington, DC 20503.

FOR FURTHER INFORMATION CONTACT: David S. Cristy, Reports Management Officer, Department of Housing and Urban Development, 451 7th Street, Southwest, Washington, DC 20410, telephone (202) 708–0050. This is not a toll-free number. Copies of the proposed forms and other available documents submitted to OMB may be obtained from Mr. Cristy.

SUPPLEMENTARY INFORMATION: The Department has submitted the proposal for the collection of information, as described below, to OMB for review, as required by the Paperwork Reduction Act (44 U.S.C. Chapter 35).

The Notice lists the following information: (1) the title of the information collection proposal; (2) the office of the agency to collect the information; (3) the description of the need for the information and its proposed use; (4) the agency form number, if applicable; (5) what members of the public will be affected by the proposal; (6) how frequently information submissions will be required; (7) an estimate of the total numbers of hours needed to prepare the information submission including number of respondents, frequency of response, and hours of response; (8) whether the proposal is new or an extension, reinstatement, or revision of an information collection requirement; and (9) the names and telephone numbers of an agency official familiar with the proposal and of the OMB Desk Officer for the Department.

Authority: Section 3507 of the Paperwork Reduction Act, 44 U.S.C. 3507; Section 7(d) of the Department of Housing and Urban Development Act, 42 U.S.C. 3535(d).

Dated: July 17, 1990.

John T. Murphy,

Director, Information Policy and Management Division.

Proposal: Affirmative Fair Housing Marketing Plan.
Office: Fair Housing and Equal Opportunity.
Description of the Need for the Information and its Proposed Use: Form HUD–932.5 is required by all applicants who desire to participate in HUD's insured housing programs and the Section 8 New Construction and Substantial Rehabilitation Program. The Department will use the information to assess the adequacy of the applicant's proposed actions to carry out the Affirmative Fair Housing Marketing (AFHM) requirements of 24 CFR 200.600 and to review compliance with these requirements under 24 CFR Part 108, the AFHM Compliance Regulations.
Form Number: HUD–932.5
Respondents: Businesses or Other For-Profit and Federal Agencies or Employees.
Frequency of Submission: On Occasion.
Reporting Buden:

	Number of respondents	x	Frequency of response	x	Hours per response	=	Burden hours
HUD–932.5	5,474		1		¾		4,106

Total Estimated Burden Hours: 4,106.
Status: Extension.
Contact: Steven K. Tursky, HUD, (202) 708–2287; Scott Jacobs, OMB, (202) 395–6880.

Date: July 17, 1990.

[FR Doc. 90–18207, Filed 8–3–90; 8:45 am]
BILLING CODE 4210–01–M

[Docket No. N–90–3128]

Notice of Submission of Proposed Information Collection to OMB

AGENCY: Administration, HUD.

ACTION: Notice.

SUMMARY: The proposed information collection requirement described below has been submitted to the Office of Management and Budget (OMB) for review, as required by the Paperwork Reduction Act. The Department is soliciting public comments on the subject proposal.

ADDRESSES: Interested persons are invited to submit comments regarding this proposal. Comments should refer to the proposal by name and should be sent to: Scott Jacobs, OMB Desk Officer, Office of Management and Budget, New Executive Office Building, Washington, DC 20503.

FOR FURTHER INFORMATION CONTACT: David S. Cristy, Reports Management Officer, Department of Housing and Urban Development, 451 7th Street, Southwest, Washington, DC 20410, telephone (202) 708–0050. This is not a toll-free number. Copies of the proposed forms and other available documents submitted to OMB may be obtained from Mr. Cristy.

SUPPLEMENTARY INFORMATION: The Department has submitted the proposal for the collection of information, as described below, to OMB for review, as required by the Paperwork Reduction Act (44 U.S.C. Chapter 35).

The Notice lists the following information: (1) the title of the information collection proposal; (2) the office of the agency to collect the information; (3) the description of the need for the information and its proposed use; (4) the agency form number, if applicable; (5) what members of the public will be affected by the proposal; (6) how frequently information submissions will be required; (7) an estimate of the total numbers of hours needed to prepare the information submission including number of respondents, frequency of response, and hours of response; (8) whether the proposal is new or an extension, reinstatement, or revision of an information collection requirement; and (9) the names and telephone numbers of an agency official familiar with the

proposal and of the OMB Desk Officer for the Department.

Authority: Section 3507 of the Paperwork Reduction Act, 44 U.S.C. 3507; section 7(d) of the Department of Housing and Urban Development Act, 42 U.S.C. 3535(d).

Dated: July 25, 1990.

John T. Murphy,

Director, Information Policy and Management Division.

Proposal: Summary of Guaranty Agreement—Graduated Payment and Growing Equity.

Office: Government National Mortgage Association (GNMA).

Description of the Need for the Information and Its Proposed Use: In compliance with Section 306(g) of the National Housing Act, GNMA is authorized to guarantee the timely payment of principal and interest on securities which are based on or backed by a pool composed of mortgages. Issuers of mortgage-backed securities polls use these forms to report monthly on their securities accounting.

Form Number: HUD–1746, 11748–A, 11748–B, 11748–C.

Respondents: Businesses Or Other For-Profit.

Frequency of Submission: On Occasion.

Reporting Burden:

	Number of respondents	×	Frequency of response	×	Hours per response	=	Burden hours
Information Collection	1,250		2.99		.25		872

Total Estimated Burden Hours: 872.

Status: Revision.

Contact: Charles Clark, HUD, (202) 708–1535; Scott Jacobs, OMB, (202) 395–6880.

Dated: July 25, 1990.

[FR Doc. 90–18208 Filed 8–3–90; 8:45 am]

BILLING CODE 4210–01–M

[Docket No. N–90–3127]

Notice of Submission of Proposed Information Collections to OMB

AGENCY: Office of Administration, HUD.

ACTION: Notices.

SUMMARY: The proposed information collection requirements described below have been submitted to the Office of Management and Budget (OMB) for review, as required by the Paperwork Reduction Act. The Department is soliciting public comment on the subject proposals.

ADDRESSES: Interested persons are invited to submit comment regarding these proposals. Comments should refer to the proposal by name and should be sent to: Scott Jacobs, OMB Desk Officer, Office of Management and Budget, New Exective Office Building, Washington, DC 20503.

FOR FURTHER INFORMATION CONTACT: David S. Cristy, Reports Management Officer, Department of Housing and Urban Development, 451 7th Street, Southwest, Washington, DC 20410, telephone (202) 708–0050. This is not a toll-free number. Copies of the proposed forms and other available documents submitted to OMB may be obtained from Mr. Cristy.

SUPPLEMENTARY INFORMATION: The Department has submitted the proposals for the collections of information, as described below, to OMB for review, as required by the Paperwork Reduction Act (44 U.S.C. Chapter 35).

The Notices list the following information: (1) the title of the information collection proposal; (2) the office of the agency to collect the information; (3) the description of the need for the information and its proposed use; (4) the agency form number, if applicable; (5) what members of the public will be affected by the proposal; (6) how frequently information submissions will be required; (7) an estimate of the total numbers of hours needed to prepare the information submission including number of respondents, frequency of response, and hours of response; (8) whether the proposal is new or an extension, reinstatement, or revision of an information collection requirement; and (9) the names and telephone numbers of an agency official familiar with the proposal and of the OMB Desk Officer for the Department.

Authority: Section 3507 of the Paperwork Reduction Act, 44 U.S.C. 3507; Section 7(d) of the Department of Housing and Urban Development Act, 42 U.S.C. 3535(d).

Dated: July 30, 1990.

John T. Murphy,

Director, Information Policy and Management Division.

Proposal: Multifamily Insurance Benefit Package.

Office: Housing.

Description of the Need for the Information and Its Proposed Use: Form HUD–2742 wil be used by lenders, who are participating in the multifamily insurance program and are entitled to insurance benefits, to present a claim for insurance benefits. Forms HUD–2744A through E will be used to collect the information required by the Statutory provisions and regulations so that an expeditious examination and correct claim settlement can be made.

Form Number: HUD–2742, 2744A, 2744C, 2744D, 2744E.

Respondents: State or Local Governments and Businesses or Other For Profit Institutions.

Frequency of Submission: On Occasion and Recordkeeping.

Reporting Burden:

	Number of respondents	X	Frequency of response	X	Hours per response	=	Burden hours
Annual Reporting	300		1		3.5		1,050

Total Estimated Burden Hours: 1,050.

Status: Revision.

Contact: Marie Elam, HUD, (202) 708–3423; Scott Jacobs, OMB, (202) 395–6880.

Date: July 30, 1990.

Proposal: Request for Occupied Conveyance.

Office: Housing.

Description of the Need for the Information and Its Proposed Use: Tenants will provide information on the form that will determine if the occupant is financially able to pay the fair market

rent and/or whether a member of the immediate family suffers from a temporary illness or injury which would prevent a physical move from the property.

Form Number: HUD–939.
Respondents: Individuals or Households.
Frequency of Submission: On Occasion.
Reporting Burden:

	Number of respondents	x	Frequency of response	x	Hours per response	=	Burden hours
Annual Reporting:							
Mortgagees	4,000		18.75		.25		18,750
Mortgagors	11,250		1		.50		5,625

Total Estimated Burden Hours: 24,375.
Status: Extension.
Contact: Art Orton, HUD, (202) 708–0740; Scott Jacobs, OMB, (202) 395–6880.

Date: July 30, 1990.

Proposal: Analysis of Proposed Main Construction Contract.

Office: Housing.
Description of the Need for the Information and Its Proposed Use: Form HUD–52396 is a comparison of actual bid cost on a conventionally developed public housing project to the approved pre-bid estimates. The form is prepared by the PHA and submitted to the Department when requesting approval for the award of construction contract.
Form Number: HUD–52396.
Respondents: State or Local Governments and Non-Profit Institutions.
Frequency of Submission: One-Time.
Reporting Burden:

	Number of respondents	×	Frequency of response	×	Hours per response	=	Burden hours
Annual Reporting	96		1.15		2		220
Recordkeeping	110		1		.25		28

Total Estimated Burden Hours: 248.
Status: Reinstatement.
Contact: William C. Thorson, HUD, (202) 708–0460; Scott Jacobs, OMB, (202) 395–6880.

Date: July 30, 1990.

Proposal: State Local Referral Report Form.

Office: Fair Housing and Equal Opportunity (FHEO).
Description of the Need for the Information and Its Proposed Use: In order to keep track of complaint receipts and milestone actions, the Regional Office of FHEO and the State/Local Agencies will use Form HUD–948 as a monitoring tool to keep each other up-to-date on activities relative to the processing of housing discrimination complaints.
Form Number: HUD–948.
Respondents: State or Local Governments and Federal Agencies or Employees.
Frequency of Submission: Monthly.
Reporting burden:

	Number of respondents	x	Frequency of response	x	Hours per response	=	Burden hours
HUD–948	120		75		1		9,000

Total Estimated Burden Hours: 9,000.
Status: Extension.
Contact: Jacquelyn J. Shelton, HUD, (202) 708–0455; Scott Jacobs, OMB, (202) 395–6880.

Date: July 30, 1990.

[FR Doc. 90–18209; Filed 8–3–90; 8:45 am]
BILLING CODE 4210–01–M

DEPARTMENT OF THE INTERIOR

Bureau of Land Management

[ID–050–4410–08]

Availability of Proposed Amendments to Sun Valley Management Framework Plan and the Monument Resource Management Plan

AGENCY: Bureau of Land Management (BLM), Interior.

ACTION: Notice of Availability of proposed amendments to the land use plans for public land in Blaine and Lincoln Counties, Idaho.

SUMMARY: Pursuant to 43 CFR part 1600 the Shoshone District of the Bureau of Land Management proposes amendments to the Sun Valley Management Framework Plan (MEP), and the Monument Resource Management Plan (RMP) to designate one Research Natural Area (RNA)/Area of Critical Environmental Concern (ACEC), one Area of Critical Environmental Concern (ACEC), and change three parcels from a retention category to a transfer category.

DATES: Comments concerning this plan amendment must be received by October 1, 1990.

ADDRESSES: Written comments concerning this plan amendment should be sent to the BLM District Manager, Shoshone District Office P.O. Box 2–B, Shoshone, ID 83352.

FOR FURTHER INFORMATION CONTACT: William West, Shoshone BLM District Office, P.O. Box 2–B, Shoshone, ID 83352, telephone (208) 886–2206.

SUPPLEMENTARY INFORMATION: The amendments which are proposed for the Monument RMP include designation of 854 acres of the Brass Cap Kipuka as an RNA/ACEC for the primary objective of preserving the existing vegetation community. The area would; (1) Remain unallotted for domestic livestock grazing (no grazing allowed); (2) be closed to off-road vehicles (ORCs); (3) be open to oil and gas exploration and

development with a no surface occupancy stipulation; (4) be closed to all surface disturbing activities except for research activities less than one acre in size and approved by the Area Manager; (5) be closed to all vegetation harvesting and manipulation except for research activities less than one acre is size and approved by the Area Manager; (6) be withdrawn to mineral entry under the 1872 mining law. The Area Manager will prepare a site specific, fire management plan based on the ecosystem need for fire to maintain the existing vegetation community. Fire suppression may occur without the use of bulldozers.

Change approximately 305 acres from retention to transfer category in the Monument RMP.

The proposed amendment to the Sum Valley MFP includes designation of 560 acres of the Sun Peak as an ACEC for the primary objective of preserving the existing vegetation community. The area would: (1) Be open to domestic sheep grazing only. The allotment would be monitored periodically to evaluate whether the site continues development toward the potential natural community. Should the site show movement away from the potential natural community, then the adjustments will be made to livestock grazing until such time as studies show the trend is again toward the potential natural community; (2) be closed to off-road vehicles (ORVs); (3) be open to oil and gas exploration and development with a no surface occupancy stipulation; (4) be closed to all surface disturbing activities except for research activities less than one acre in size and approved by the Area Manager; (5) be closed to all vegetation harvesting and manipulation except for research activities less than one acre in size and approved by the Area Manager; (6) be withdrawn to mineral entry under the 1872 mining law. The Area manager will prepare a site specific, fire management plan based on the ecosystem need for fire to maintain the vegetation community. Fire suppression may occur without the use of bulldozers.

Location and Availability of Documents Relevant to the Planning Process: All documents are located at the Shoshone District Office. The hours of availability are 7:45 a.m. to 4:30 p.m. Monday through Friday, except holidays.

K Lynn Bennett,

District Manager.

[FR Doc. 90–18241 Filed 8–3–90; 8:45 am]

BILLING CODE 4310-GG-M

[UT-020-00-4212-13; U-66618]

Realty Action, Utah

AGENCY: Bureau of Land Management, Interior.

ACTION: Notice of Realty Action. Exchange of Lands in Box Elder County, Utah.

SUMMARY: The following described public land is being considered for exchange pursuant to Section 206 of the Federal Land Policy and Management Act of 1976, (43 U.S.C. 1716):

Description	Acres
T. 11N., R. 19W. SLM	
Sec. 1, Lots 2-3, N½SE¼NW¼, NE¼SW¼SE¼NW¼, SE¼SE¼NW¼, S½NE¼, SE¼	353.55
Sec. 3, Lots 1-4, SE¼NE¼, SW¼SW¼	243.94
Sec. 4, Lots 2-7, S½NE¼, SE¼NW¼, E½SW¼, SE¼	503.24
Sec. 10, NW¼NE¼	40.00
Sec. 12, NE¼, N½SE¼	240.00
Total acres	1380.73

Final determination on the exchange will await completion of an environmental analysis. In accordance with the regulation in 43 CFR 2201.1(b), the publication of this notice will segregate the public lands as described above, from appropriation under the public land laws, including the mining laws, but not the mineral leasing laws.

Information on the exchange is available from the District Manager, Bureau of Land Management, Salt Lake District Office, 2370 South 2300 West, Salt Lake City, Utah 84119.

Deane H. Zeller,

Salt Lake District Manager.

[FR Doc. 90–18247 Filed 8–3–90; 8:45 am]

BILLING CODE 4310-DQ-M

[NV-060-00-4333-12]

Camping Stay Limits for Public Lands; Battle Mountain District, NV

AGENCY: Bureau of Land Management, Interior.

ACTION: Establishment of camping stay limit for public lands administered by the BLM in the Battle Mountain District, Nevada.

SUMMARY: This notice supersedes Federal Register document 90–12693 appearing at 55 FR 22409 on June 1, 1990. Person(s) may occur a site or multiple sites within a five (5) mile radius on public lands not closed or otherwise restricted to camping within the Battle Mountain District for a total period of not more than fourteen (14) days during any twenty eight (28) day period. Following the fourteen (14) day period persons may not relocate within a distance of five (5) miles of the site that was just previously occupied until completion of the twenty eight (28) day period. The fourteen (14) day limit may be reached either through a number of separate visits or through a period of continuous occupations of a site. Under special circumstances and upon request, the authorized officer may give permission for extension to the fourteen (14) day limit.

Additionally, no person may leave personal property unattended in designated campgrounds, recreation developments or elsewhere on public lands within the Battle Mountain District for a period of more than forty-eight (48) hours without written permission from the authorized officer.

DATES: This camping stay limit will be effective August 6, 1990.

FOR FURTHER INFORMATION CONTACT: James D. Currivan, District Manager, Battle Mountain District Office, North Second and Scott Street, P.O. Box 1420, Battle Mountain, Nevada 89820, telephone (702) 635–4000.

SUPPLEMENTARY INFORMATION: This camping stay limit is being established in order to assist the Bureau in reducing the incidence of long-term occupancy trespass being conducted under the guise of camping on public lands within the Battle Mountain District. Of equal importance is the problem of long-term camping which precludes equal opportunities for other members of the public to camp in the same area, which creates user conflicts.

Authority for this stay limit contained in CFR title 43, chapter II, part 8365, subparts 8365.1–2, 8365.1–8, and 8365.2–3.

James D. Currivan,

District Manager.

[FR Doc. 90–18203 Filed 8–3–90; 8:45 am]

BILLING CODE 4310-11C-M

INTERSTATE COMMERCE COMMISSION

[I.C.C. ORDER NO. P-108]

Passenger Train Operation; Belt Railway Co. of Chicago et al.

The National Railroad Passenger Corporation (AMTRAK) has established through passenger train service between Chicago, Illinois and various destinations. Many of these train operations require the use of tracks and other facilities of the Consolidated Rail Corporation (CR). The River Branch Bridge over the Chicago River is temporarily out of service because of a broken cable. An alternate route is available via The Belt Railway Company of Chicago (BRC), the Indian Harbor Belt Railroad Company (IHB), and the Chicago and Western Indian Railroad Company (CWIR) in the area of Chicago to permit the trains involved to reach a connection with CR at South Bend, Indiana.

It is the opinion of the Commission that such operations are necessary in the interest of the public and the commerce of the people; that notice and public procedure are impracticable and contrary to the public interest; and that good cause exists for making this order effective upon less than thirty days' notice.

(d) *Effective date.* This order shall become effective at 6:15 p.m., (EDT), June 13, 1990.

(e) *Expiration date.* The provisions of this order shall expire at 6:15 p.m., (CDT), June 14, 1990, unless otherwise modified, amended, or vacated by order of this Commission.

This order shall be served upon The Belt Railway Company of Chicago, the Indiana Harbor Belt Railroad Company, the Chicago and Western Indiana Railroad Company, and the National Railroad Passenger Corporation, and a copy of this order shall be filed with the Director, Office of the Federal Register.

Issued at Washington, DC, June 13, 1990, William J. Love, Agent.

Sidney L. Strickland, Jr.,

Secretary.

[FR Doc. 90-18292 Filed 8-3-90; 8:45 am]

BILLING CODE 7035-01-M

[Service Order No. 1510]

D&H Corporation [1] Canadian Pacific Limited Authorized To Operate Tracks of Delaware and Hudson Railway Company, Debtor (Francis P. Dicello, Trustee)

AGENCY: Interstate Commerce Commission.

ACTION: Service Order No. 1510 and notice of modified hearing procedure requesting comment on extension beyond 30 days.

SUMMARY: This order authorizes D&H Corporation (D&H Corp.)/Canadian Pacific Limited (CP Rail), to operate without Federal subsidy or other Federal compensation over tracks of the Delaware and Hudson Railway Company (D&H) for 30 days (*i.e.*, from, August 1, 1990 until August 30, 1990), and seeks comment on an extension of the authority beyond 30 days through modified hearing procedure.

D&H Corp. represents that with the support of its parent, CP Rail, it has the necessary financial resources and the managerial and operational capability to begin rail service on the D&H lines immediately upon the Trustee's termination of service.

Orders issued by the Bankruptcy Court overseeing the reorganization of the Delaware and Hudson Railway Company, provide for rail service over the lines of the carrier. Those orders now require the Trustee to cease all operations of D&H effective July 31, 1990.

Under 49 U.S.C. 11123(a), the Commission may issue a service order for up to 30 days when it finds that a "failure in traffic movement exists which creates an emergency situation of such magnitude as to have substantial adverse effects on rail service in the United States or a substantial region of the United States." Extention of the order requires that the Commission, after a hearing, certify the continued existence of the emergency.

DATES: *Effective Date:* This order shall become effective at 12:01 a.m., August 1, 1990, and shall remain in effect until 11:59 p.m., August 30, 1990, unless otherwise modified, amended, or vacated by order of this Commission.

Any interested party may file comments regarding this order and any extension of it by August 10, 1990. Responses to those statements must be filed by August 17, 1990.

ADDRESSES: An original and 15 copies of comments referring to the service order number should be sent to: Office of the Secretary, Case Control Branch, Attn: Service Order Docket No. 1510, Interstate Commerce Commission, Washington, DC 20424.

FOR FURTHER INFORMATION CONTACT: Bernard Gaillard (202) 275-7849 or Melvin F. Clemens (202) 275-1559 [TDD for hearing impaired: (202) 275-1721].

SUPPLEMENTARY INFORMATION: Section 11123(a) of the Interstate Commerce Act authorizes the Commission to act in emergency situations where it finds that a "failure in traffic movement exists which creates an emergency situation of such magnitude as to have substantial adverse effects on rail service in the United States or a substantial region of the United States." The initial period for the service order may not exceed 30 days and the order may be extended only after the full Commission, after a hearing, certifies the continued existence of the transportation emergency.

On June 20, 1988, the D&H [2] filed a Petition for Reorganization under Chapter 11 of the Bankruptcy Code, 11 U.S.C. 1161, *et seq.*, in the U.S. District Court for the District of Delaware (Bankruptcy Filing No. 88-342-HSB). Upon notification from D&H that it was terminating operations on June 23, 1988, by orders served June 22, and June 23, 1988, pursuant to the provisions of 49 U.S.C. 11125, the Commission found that D&H's impending cessation of service without authority met the statutory criteria for directed service and authorized The New York, Susquehanna and Western Railway Corporation (NYS&W) to operate the entire 569 miles of D&H owned lines and 1,012 miles of D&H trackage rights. The orders specified that there would be no Federal subsidy or compensation under 49 U.S.C. 11125(b)(5). That authority expired on February 13, 1989.

On February 13, 1989, Service Order No. 1506 was issued allowing continued operations under authority of 49 U.S.C. 11123(a). That authority continued with several modifications until the Trustee resumed full operations over D&H's lines on February 28, 1990.

On June 8, 1990, the D&H Trustee sought and obtained an order from the

[1] D&H Corporation is a wholly owned subsidiary of Canadian Pacific Limited that was formed to acquire the assets of the Delaware and Hudson Railway Company. That acquisition is being considered by the Commission in Finance Docket No. 31700.

[2] The D&H is a northern regional railroad which operates over 1,581 miles of track and handles a wide variety of traffic between points in the Northeast and the Midwest and between Canada and points in the southeastern portion of the United States.

Bankruptcy Court, Judge Helen S. Balick presiding, approving an agreement between the Trustee and CP Rail and its subsidiary D&H Corp. for the sale of essentially all of the assets of D&H; *See Order Authorizing the Sale of Substantially All of the Assets of the Delaware and Hudson Railway Company, Pursuant to 11 U.S.C. 365, Free and Clear of All Liens, Claims, Encumbrances, Charges and Interests, and the Incurring of Secured Debt Pursuant to 11 U.S.C. 364(d)*, U.S. Bankruptcy Court for the district of Delaware at Wilmington, Case No. 88–342–HSB, June 8, 1990. Consistent with that approval is the requirement for the Interstate Commerce Commission to review the application to acquire D&H. CP Rail's notice of intent to file an application was filed on or about July 16, 1990. The Bankruptcy Court has requested the Commission to complete its review of the application within 90 days of its filing and the Commission has agreed to accommodate the Court's request. The application was filed on July 18, 1990.

Orders issued by the Court authorizing the Trustee to provide rail service over the lines of the D&H now require the Trustee to cease all operations of D&H effective July 31, 1990, due to the expiration of authority to use cash collateral of the estate. D&H Corp./CP Rail now seek authority under 49 U.S.C. 11123(a) to operate D&H's entire system in the absence of any operation by the Trustee and during the pendency of the acquisition proceeding before the Commission. D&H Corp./CP Rail have requested authority to commence operations over the D&H on August 1, 1990, to assure that a cessation of service by D&H will not occur and leave numerous shippers in the region without essential rail transportation. D&H Corp./CP Rail's petition for emergency service authority indicates that with the support of the parent, CP Rail, necessary financial resources and managerial and operational capabilities are available to begin rail service on the D&H lines immediately upon the Trustee's termination of service. The Court and the Trustee have agreed to allow D&H Corp./CP Rail to utilize D&H facilities and equipment for interim operations of D&H lines. D&H Corp./CP Rail's petition for emergency service authority under section 11123(a), filed on July 30, 1990, purports to use D&H employees to the maximum extent practicable.

Accordingly, an emergency exists affecting rail traffic to and from the Northeast. This emergency also threatens to disrupt the competitive balance in the region.

It is the opinion of the Commission that the magnitude of this emergency situation adversely affects a substantial area in the northeastern region of the United States and the movement of traffic through major gateways to other regions of the United States and Canada. The operations of the D&H including trackage rights [3] should be continued temporarily by D&H Corp./CP Rail, under the provisions of 49 U.S.C. 11123. D&H Corp./CP Rail, as the prospective purchaser, can best provide for the continuation of emergency service during the pendency of the proceeding to acquire the D&H. Prior notice of this action and public procedure are impractical and contrary to the public interest, and good cause exists for making this order effective upon less than 30 days' notice.

We find

A failure in traffic movement exists and creates an emergency situation of such magnitude as to have a substantial adverse effect on rail service in a substantial region of the United States.

D&H Corp., with the support of its parent, CP Rail, has the necessary financial resources and managerial and operational capabilities available to begin rail service on the D&H lines immediately upon the Trustee's termination of service.

This action will not significantly affect either the quality of the human environment or energy conservation.

It is ordered

49 CFR 1033.1510, D&H Corporation/ Canadian Pacific Limited Authroized To Operate Over Tracks of Delaware & Hudson Railway Company, Debtor (Francis P. Dicello, Trustee)

(a) *Authority.* D&H Corp./CP Rail is authorized to operate over all tracks owned by the D&H and to operate as a substitute for D&H over 1,012 miles of trackage rights over which D&H presently has the right and obligation to operate.

(b) *Application.* The provisions of this order shall apply to intrastate, interstate, and foreign traffic.

(c) *Rates.* Inasmuch as this operation by D&H Corp./CP Rail is due to D&H's cessation of service, the rates applicable to traffic moved by D&H Corp./CP Rail over these lines shall be the rates applicable to traffic routed over D&H unless modified.

(d) *Employees.* In providing service under this emergency service order D&H Corp./CP Rail shall comply with the requirements of section 11123(a)(3) with respect to the use of employees.

(e) *Compensation.* The D&H's Trustee and the Court have expressed a willingness to make D&H tracks and equipment available to allow interim service required to fulfill D&H's common carrier obligation. For purposes of this order, compensation accruing to D&H shall be on such terms as the parties may establish between themselves, or shall be subject to 49 U.S.C. 11123(b)(2). Compensation for continued use of D&H's trackage rights shall be upon the terms provided in the various agreements.

(f) *Effective date.* This order shall be effective at 12:01 a.m,, August 1, 1990.

(g) *Expiration date.* The provisions of this order shall expire at 11:59 p.m. on August 30, 1990, unless otherwise modified, amended, or vacated by order of this Commission.

This action is taken under authority of 49 U.S.C. 11123 (a). This order will be served on D&H Corporation/Canadian Pacific Limited, as well as the Trustee in Bankruptcy and the U.S. District Court for the District of Delaware (Bankruptcy Filing No. 88–342–HSB). This order shall also be served upon the Federal Railroad Administration, the Association of American Railroads as agent of the railroads subscribing to the Car Service and Car Hire Agreement under the terms of that agreement, and upon the American Short Line Railroad Association. Notice of this order shall be given to the general public by depositing a copy in the Office of the Secretary of the Commission at Washington, D.C., and by filing a copy with the Director, Office of the Federal Register.

Decided: July 31, 1990.

By the Commission, Chairman Philbin, Vice Chairman Phillips, Commissioners Simmons, Lamboley, and Emmett.

Sidney L. Strickland, Jr.,

Secretary.

[FR Doc. 90–18291 Filed 8–3–90; 8:45 am]

BILLING CODE 7035-01-M

[3] While they have had no opportunity to address the issue in this order, Consolidated Rail Corporation (Conrail) has consistently asserted its position that D&H's trackage rights over its lines are not assignable, and that the Commission lacks authority to direct or authorize operations over the trackage rights D&H has on the Conrail system. That is not correct. As we indicated in Finance Docket No. 31295, Directed Service Order No. 1504, served August 17, 1988, and Service Order No. 1506, served February 13, 1989, the use of lines and trackage rights by a carrier as a substitute for D&H with the permission of D&H so as to carry out D&H's common carrier obligation does not effect an assignment. At this time, D&H Corp./CP Rail is simply operating for D&H and stands in D&H's shoes vis-a-vis trackage over Conrail.

DEPARTMENT OF JUSTICE

Information Collections Under Review

August 1, 1990.

The Office of Management and Budget (OMB) has been sent the following collection(s) of information proposals for review under the provisions of the Paperwork Reduction Act (44 U.S.C. chapter 35) and the Paperwork Reduction Reauthorization Act since the last list was published.

Entries are grouped into submission categories, with each entry containing the following information:

(1) The title of the form/collection;

(2) The agency form number, if any, and the applicable component of the Department sponsoring the collection;

(3) How often the form must be filled out or the information is collected;

(4) Who will be asked or required to respond, as well as a brief abstract;

(5) An estimate of the total number of respondents and the amount of time estimated for an average respondent to respond;

(6) An estimate of the total public burden (in hours) associated with the collection; and,

(7) An indication as to whether section 3504(h) of Public Law 96–511 applies.

Comments and/or suggestions regarding the item(s) contained in this notice, especially regarding the estimated public burden and associated response time, should be directed to the OMB reviewer, Mr. Edward H. Clarke, on (202) 395–7340 and to the Department of Justice's Clearance Officer, Mr. Larry E. Miesse, on (202) 514–4312.

If you anticipate commenting on a form/collection, but find that time to prepare such comments will prevent you from prompt submission, you should notify the OMB reviewer and the DOJ Clearance Officer of your intent as soon as possible.

Written comments regarding the burden estimate or any other aspect of the collection may be submitted to Office of Information and Regulatory Affairs, Office of Management and Budget, Washington, DC 20503, and to Mr. Larry E. Miesse, DOJ Clearance Officer, SPS/JMD/5031 CAB, Department of Justice, Washington, DC 20530.

Extension of Expiration Date of a Currently Approved Collection Without Any Change in Substance or in Method of Collection

(1) *Capital Punishment Report on Inmates Under Sentence of Death.*

(2) NPS–8, NPS–8A, NPS–8B, NPS 8–C, NPS–8(L). Bureau of Justice Statistics.

(3) Annually

(4) State or local governments, Federal agencies or employees. This program is concerned with a study of capital punishment statutes and persons under sentence of death in State and Federal correctional institutions. Data from this program will be used by the Bureau of Justice Statistics, Congress, journalists, researchers, and various State respondents as a source of comparative and trend data.

(5) 2,602 estimated annual respondents, at .75 hours per response.

(6) 664 estimated annual public burden hours.

(7) Not applicable under 3504(h).

(1) *Application for Registration and Application for Registration Renewal.*

(2) DEA–363 (Application), DEA–363a (Renewal). Regulatory Support Section, Office of Diversion Control, Drug Enforcement Administration.

(3) On occasion for application, annually for renewal.

(4) State or local governments, businesses or other for-profit, non-profit institutions. Practitioners who dispense narcotic drugs to individuals for maintenance or detoxification treatment must register with the Drug Enforcement Administration under the Narcotic Addict Treatment Act of 1974. Registration is needed for control measures and is used to prevent diversion.

(5) 900 estimated responses at .5 hours per response.

(6) 450 estimated annual public burden hours.

(7) Not applicable under 3504(h).

(1) *Arrival and Departure Record.*

(2) I–94T. Immigration and Naturalization Service.

(3) On occasion.

(4) Individuals or households. This form is used to aid the effectiveness of the Transit Without Visa (TWOV) process, and to enhance accuracy of the TWOV data collection. This form provides the most efficient method for collecting and processing this data.

(5) 1,140,000 annual respondents at .066 hours per response.

(6) 9,240 estimated annual public burden hours.

(7) Not applicable under 3504(h).

(1) *Application for Employment Authorization.*

(2) I–765. Immigration and Naturalization Service.

(3) On occasion.

(4) Individuals or households. The information collected will be used solely to determine eligibility of aliens for evidence of an employment authorization document pursuant to regulatory authority.

(5) 1,000,000 estimated annual responses at 1 hour per response.

(6) 1,000,000 estimated annual public burden hours.

(7) Not applicable under 3504(h).

New Collections

(1) *Survey of Criminal Justice Implications in Electronic Benefit Transfer.*

(2) No form number. National Institute of Justice, Office of Justice Programs.

(3) On occasion.

(4) Individuals or households. The data collected will be used to evaluate the electronic benefit transfer program under development by the Department of the Treasury and the criminal justice implications of this system for the benefit recipient and the Federal government.

(5) 5,500 estimated annual responses at .06 hours each.

(6) 343 estimated annual public burden hours.

(7) Not applicable under 3504(h).

(1) *F–1 Labor Market Study.*

(2) No form number. Immigration and Naturalization Service.

(3) On occasion.

(4) Individual or households. This data will be used to determine the impact, under current and proposed regulations, of off-campus employment of academic student (F–1) visa holders.

(5) 1,068 estimated annual respondents at .166 hours each.

(6) 178 estimated annual public burden hours.

(7) Not applicable under 3504(h).

Larry E. Miesse,

Department Clearance Officer, U.S. Department of Justice.

[FR Doc. 90–18246 Filed 8–3–90; 8:45 am]

BILLING CODE 4410–10–M

National Institute of Justice

Operation of the National Institute of Justice Technology Assessment Program Information Center

AGENCY: National Institute of Justice, Justice.

ACTION: Notice of competitive procurement for the continued operation of the National Institute of Justice Technology Assessment Program Information Center.

SUMMARY: The National Institute of Justice is publishing notice of a competitive procurement for the continued operation of the National Institute of Justice Technology Assessment Program Information Center. This action is provided for under

the terms of The Anti-Drug Abuse Act of 1988, as amended, 3722(c), (Pub.L. 100–690), 42 U.S.C. 3722(c). This action furnishes notice of the proposed competitive procurement.

DATES: All proposals must be received by the close of business, September 5, 1990. No extension of this date will be granted.

ADDRESS: All proposals must be mailed or otherwise sent to: National Institute of Justice, Technology Assessment Program, Room 800, 633 Indiana Avenue, NW., Washington, DC 20531.

FOR FURTHER INFORMATION CONTACT: Mr. Lester Shubin (at the above address). Phone (202) 514–6208. (This is not a toll free number.)

SUPPLEMENTARY INFORMATION: The following supplementary information is provided:

I. Introduction

The National Institute of Justice (NIJ), the research arm of the U.S. Department of Justice, created the Technology Assessment Program (TAP) to assist State and local law enforcement agencies in the application of technology to improve and strengthen the overall criminal justice system. The primary focus of this program is to assist criminal justice agencies in making informed equipment purchasing decisions.

The program consists of three major interrelated tasks designed to meet the needs of criminal justice agencies: the development of performance standards for specific items of equipment, tests of commercially-available equipment against those standards, and dissemination of information concerning new standards and test results. To accomplish this, NIJ established three functional program elements.

- The Law Enforcement Standards Laboratory (LESL) of the National Institute of Standards and Technology (NIST), which is funded by NIJ through an interagency agreement.
- The Technology Assessment Program Information Center (TAPIC), which is funded by NIJ through a contract.
- The Technology Assessment Program Advisory Council (TAPAC), which currently consists of 59 nationally recognized criminal justice practitioners from Federal, State, and local agencies that assist NIJ in setting priorities for the development of equipment standards, guides, test reports, and other special publications.

TAPIC serves as an information resource for the entire criminal justice system, disseminating research findings, TAP publications, and the results of equipment testing by mail and electronically to registered users and in response to individual inquiries.

II. Scope

The contractor shall serve as the secretariat to the NIJ Advisory Council (TAPAC). The contractor's responsibilities include but are not limited to coordinating meeting dates with NIJ/LESL staff and individual council members; arranging suitable meeting accommodations, developing meeting agenda with council/NIJ/LESL input; preparation of minutes of meetings and distribution to council members and others; reimbursement of council members for travel expenses when appropriate; and coordinating the appointment of Advisory Council members with NIJ.

The NIJ equipment testing program is a vital operation of the contractor. The contractor shall draft RFP's to solicit bids from independent testing laboratories with technical assistance from LESL; evaluate the bids with technical assistance from LESL; award the testing contract, with NIJ approval; participate in on-site evaluations of the testing laboratory competence; monitor the testing; review the test results with LESL assistance; prepare, publish, and distribute the test reports; establish and maintain consumer product lists of equipment found to comply with the NIJ standards.

In consultation with NIJ, the contractor shall man displays and represent NIJ at major conferences such as the IACP Annual Conference, the American Society for Industrial Security Annual Conference, the National Sheriffs Annual Conference, and the Fraternal Order of Police Biennial Conference.

The contractor shall recommend the need for, draft, and publish bulletins, caution notices, or other information on law enforcement equipment. Also, the contractor shall be responsible for preparing news releases and routine magazine articles such as the TAP bulletin in *Law Enforcement Technology*.

Many TAP contacts are made through a toll-free information number which shall be maintained by the contractor. Specialists respond to user needs, provide appropriate TAP publications, and refer users to other appropriate sources of technical information. The contractor shall also maintain an on-line computer base of TAP documents which shall be updated as needed to keep the information current. Also, the contractor shall maintain a list of registered users, update at least quarterly, and distribute all TAP publications upon publication.

III. Eligibility

Eligible applicants are those submitting proposals complete in all required areas listed in this announcement.

IV. Level and Duration of Funding

The level of funding for these tasks will be up to $2.4 million dollars to cover the base year and three subsequent years of work. All funding is subject to the availability of funds and the will of Congress for each of the four (4) years of funding.

V. Application Requirements and Procedures

Applicants should submit an original and two copies of their proposal. Submissions must include:

(1) Abstract of the full proposal, not to exceed one page.

(2) Description of the project, specifying all essential project elements and who will be responsible for implementing these elements.

(3) Statement of the applicant's qualifications, intended management plan, task plan (including task timetable), products to be produced, and résumés of primary persons should be appended.

(4) A fully executed Federal Assistance Form 424 with cost estimates by budget category including time commitments from key project personnel and short narrative explanation of budgeted costs. The budget should outline all direct and indirect costs for personnel, fringe benefits, travel, equipment, supplies, subcontracts, and overhead. Percentage of time and personnel-months of effort to be devoted by principal staff should also be included.

(5) In additional to Form 424, three recent reguirements involve certification regarding (1) debarment, (2) drug-free workplace, and (3) certification regarding lobbying. Certification forms can be obtained by contacting the NIJ Program Manager. It should be noted that there are separate debarment forms for direct recipients and for subrecipients and separate drug-free workplace forms for individuals and other applicants. Certification regarding lobbying pertains to grants, contracts, or cooperative agreements of $100,000 or more.

VI. Review Procedures

The selection from among competing applicants will be made on the basis of the following criteria. Under law, the Director has sole authority for awarding cooperative agreements. Thus, reviewers' assessments of the project

submissions, together with the Institute program manager's assessments, are submitted for consideration to the Director.

The following criteria are used to assess proposals:

1. Understanding the Project

Satisfactory evidence that the applicant understands the critical role of LESL in the technical aspect of testing procedures, evaluations, monitoring and review of results, and preparation of all test reports. A discussion of the technical requirements of the work in such areas as equipment testing program, dissemination systems, representation and TAPAC support; and to the human resources necessary for managment of these systems. A demonstrated knowledge of law enforcement and criminal justice system operations, equipment used by police, and an awareness of the unique requirements of criminal justice agencies.

2. Quality of Technical Approach

The proposals should demonstrate the soundness, practicability, feasibility of the approach, and the quality and level of efforts devoted to the various tasks. Applicants must demonstrate the capability to operate effectively an information dissemination resource center responding to the needs of a diverse user group. In addition, the proposals should demonstrate the capability to plan, schedule, coordinate, and prepare minutes/reports of large group meetings with participants from many geographical locations. Also, applicants should demonstrate the capability to prepare reports, effective news releases, magazine articles, and visual aids for presentations based upon technical data obtained through laboratory testing.

Applicants must demonstrate the capability to identify specific equipment to be tested, establish budgetary estimates of testing program, jointly develop with LESL RFPs and evaluate technical proposals for independent laboratory testing programs, monitor work of independent laboratories, jointly evaluate results with LESL, and archive all materials tested. Also, applicants should describe their capability to establish on-line computer information data bases, and provide a description of plans for networking to enhance targeting of audiences, expansion of user base, and promotion of increased program visibility and impact.

3. Facilities, Staff Experience and Capability

Applicants must demonstrate operational staff experience and education: demonstration of experience in the full range of criminal justice disciplines, and in related research and programs; staff experience in all aspects of the TAPIC statement of work; identification of key personnel, committed in advance to the program, and résumés provided. The proposal must include a description of the organization that will accomplish the stated work, the role of each position, and how each task will be performed. The submission must demonstrate the ability to effectively coordinate with all of the TAP èlements, testing laboratories, manufacturers, major associations, and information requests. Appropriateness of propsed managers' education and experience to their functions and responsibilities in the project must be demonstrated.

4. Corporate Capability

Applicants must demonstrate recent successful experience in managing similar contracts or related work of comparable technical complexity. Applicants must describe the completeness, practicality and feasibility of the proposed management plan in terms of proposed time, workflow and resources. In addition, a discussion of the quality of the organization with respect to those personnel assigned to the operation should be included.

5. Adequacy of Cost Estimates

Budget estimates will be assessed to determine if the applicant has estimated the total project costs realistically and allocated these costs among particular sub-categories in an efficient manner. Projected costs will be assessed as they relate to proposed tasks (workplan), the researcher qualifications, and the management plan.

Paul Cascarano,

Acting Director, National Institute of Justice.

[FR Doc. 90-18218 Filed 8-3-90; 8:45 am]

BILLING CODE 4410-18-M

NATIONAL COMMUNICATIONS SYSTEM

Federal Telecommunication Standards; Solicitation of Comments on Proposed Standard

AGENCY: National Communications System, Office of Technology and Standards.

ACTION: Notice for comment on proposed standard.

SUMMARY: The purpose of this notice is to solicit the views of Federal agencies, industry, the public, and State and local governments on proposed Federal Telecommunications Standard 1002A, "Telecommunications: Time and Frequency Information in Telecommunication Systems."

DATES: Comments are due on or before November 6, 1990.

ADDRESSES: Send comments to the National Communications System, Office of Technology and Standards, Washington, DC 20305-2010.

FOR FURTHER INFORMATION CONTACT: Mr. Robert Adair, National Telecommunications and Information Administration, Institute for Telecommunication Sciences, telephone (303) 497-3723.

SUPPLEMENTARY INFORMATION:

1. The General Services Administration (GSA) is responsible under the provisions of the Federal Property and Administrative Services Act of 1949, as amended, for the Federal Standardization Program. On August 14, 1972, the Administrator of General Services designated the National Communications System (NCS) as the responsible agent for the development of Federal telecommunication standards.

2. Prior to the adoption of proposed Federal standards, it is important that proper consideration be given to the needs and views of Federal agencies, industry, the public, and State and local governments.

3. Requests for copies of the draft proposed FED-STD 1002A should be directed to the National Communications System, Office of Technology and Standards, Washington, DC 20305-2010

Frank McClelland,

Acting Assistant Manager, NCS Office of Technology & Standards.

Beverly Ann Sampson,

Federal Liaison Officer.

[FR Doc. 90-18276 Filed 8-3-90; 8:45 am]

BILLING CODE 3610-05-M

NUCLEAR REGULATORY COMMISSION

Documents Containing Reporting or Recordkeeping Requirements; Office of Management and Budget Review

AGENCY: U.S. Nuclear Regulatory Commission.

ACTION: Notice of the Office of Management and Budget review of information collection.

SUMMARY: The Nuclear Regulatory Commission (NRC) has recently submitted to the Office of Management and Budget (OMB) for review the following proposal for the collection of information under the provisions of the Paperwork Reduction Act (44 U.S.C. chapter 35).

1. *Type of submission, new, revision, or extension:* Revision (Expedited Review—OMB approval is requested within 5 days of receipt of the "Request for OMB Review.")

2. *The title of information collection:* Immediately effective 10 CFR parts 30 and 35 Interim Final Rule for "Authorization to prepare radiopharmaceutical reagent kits and elute radiopharmaceutical generators; use of radiopharmaceuticals for therapy."

3. *The form number if applicable:* Not applicable.

4. *How often the collection is required:* Collection is only required when the licensee makes a departure permitted in the interim final rule from the elution and preparation instructions for diagnostic radiopharmaceuticals or package insert instructions for use and route of administration for therapy radiopharmaceuticals.

5. *Who will be required or asked to report:* Medical use and commercial nuclear pharmacy material licensees who make a departure, permitted under the interim final rule, to the preparation and elution instructions for diagnostic radiopharmaceuticals or package insert indications for use or route of administration for therapy radiopharmaceuticals.

6. *Estimate of the number of responses:* Each departure is a response. It is estimated that annually there will be 23,000 diagnostic radiopharmaceutical departures and 100 therapeutic radiopharmaceutical departures.

7. *An estimate of the total number of hours needed to complete the requirement or request:* The average burden per response is: An estimated 6 minutes for each medical use licensee that elutes generators and prepares diagnostic radiopharmaceuticals when making the original written directive for a specific departure; 3 minutes for each medical use licensee that elutes generators and prepares diagnostic radiopharmaceuticals, when making a departure, when the directive references the original written directive; 5 minutes for each medical use licensee that orders its diagnostic radiopharmaceuticals from a commercial nuclear pharmacy when making the original written directive for a specific departure; 1 minute for each medical use licensee that orders its diagnostic radiopharmaceuticals from a commercial nuclear pharmacy when making a departure for subsequent departures, which reference the original written directive; 1 minute for commercial nuclear pharmacy licensees; and 6 minutes for medical use licensees using therapy radiopharmaceuticals. The total annual burden for the industry is 1,058 hours for the diagnostic radiopharmaceuticals and 10 hours for therapeutic radiopharmaceuticals.

8. *An indication of whether section 3504(h), Public Law 96–511 applies:* Not applicable.

9. *Abstract:* The interim final rule amends 10 CFR 30.34, 35.200 and 35.300. This rule will be in effect for a period of three years from the date of publication in the Federal Register. It permits medical use or commercial nuclear pharmacy licensees to depart from the manufacturer's instructions for generator elution and diagnostic reagent kit preparation or medical use licensees to depart from the indications for use and route of administration when a written directive is made for the departure by a physician-authorized user and a record is made of the number of patient administrations under the departure.

Copies of the submittal may be inspected or obtained for a fee from the NRC Public Document Room, 2120 L Street, NW., Lower Level, Washington, DC.

Comments and questions can be directed by mail to the OMB reviewer: Ronald Minsk, Paperwork Reduction Project (3150–0010 and 0017), Office of Management and Budget, Washington, DC 20503.

Comments can also be communicated by telephone at (202) 395–3085. The NRC Clearance Officer is Brenda Jo. Shelton, (301) 492–8132.

Dated at Bethesda, Maryland, this 30th day of July, 1990.

For the U.S. Nuclear Regulatory Commission.

Patricia G. Norry,

Designated Senior Official for Information Resources Management.

[FR Doc. 90–18266 Filed 8–3–90; 8:45 am]

BILLING CODE 7590–01–M

[Docket No. 50–280]

Virginia Electric and Power Co.

Environmental Assessment and Finding of No Significant Impact

The U.S. Nuclear Regulatory Commission (the Commission) is considering the issuance of an exemption from the requirements of appendix J to 10 CFR part 50 to Virginia Electric and Power Company (the licensee) for Surry Power Station, Unit No. 1, located in Surry County, Virginia.

Environmental Assessment

Identification of Proposed Action

The proposed exemption would grant a one-time relief from the schedular requirements of 10 CFR part 50, appendix J, paragraph III.A.6(b) to perform a Type A test every outage until two consecutive tests meet the acceptance criteria. The requested exemption would allow the licensee to resume their normal retest schedule in accordance with paragraph III.D. of appendix J.

The licensee's request for exemption and bases therefor are contained in a letter dated April 5, 1990.

The Need for the Proposed Action

The proposed exemption would allow a one-time relief from performing a Type A test for the current refueling outage and enable Surry Unit 1 to resume the normal retest schedule specified in section III.D. of 10 CFR part 50, appendix J, and therefore prevent unnecessary pressurization of the containment to design basis pressure.

The purpose of the Type A testing is to measure and ensure that the leakage through the primary reactor containment does not exceed the maximum allowable leakage rate. It also provides assurance that periodic surveillance, maintenance and repairs are made to systems or components penetrating the containment. The last two Type A tests that the licensee performed have demonstrated that containment integrity has not significantly degraded over the operating cycle. In addition, the licensee has replaced containment sump isolation valves which were major contributors to containment leakage problems, and resolved the staff's concern about leakage from water-filled containment penetrations which are expected to operate during post-accident conditions. Therefore, the licensee has requested a one-time exemption from the schedular requirements of paragraph III.A.6(b) of appendix J to 10 CFR part 50.

Environmental Impacts of the Proposed Action

The proposed exemption would allow a one-time relief from the schedular requirements to perform a Type A test every outage until two consecutive tests meet the acceptance criteria. The proposed exemption will not negatively impact containment integrity and will not significantly change the risk from facility accidents. Therefore, post-accident radiological releases will not be significantly greater than previously determined, nor does the proposed exemption otherwise affect radiological plant effluents, or result in any significant occupational exposure. Likewise, the proposed exemption would not affect nonradiological plant effluents and would have no other environmental impacts. Therefore, the Commission concludes that there are no significant radiological or nonradiological environmental impacts associated with the proposed exemption.

Alternatives to the Proposed Action

Because it has been concluded that there are no measurable impacts associated with the proposed exemption, any alternative to the exemption will have either no environmental impacts or greater environmental impacts.

The principal alternative would be to deny the requested exemption. Such action would not reduce environmental impacts of the Surry Unit 1 operations and would result in reduced operational flexibility.

Alternative Use of Resources

This action does not involve the use of resources not previously considered in the Final Environmental Statement for the Surry Power Station, Unit 1.

Agencies and Persons Consulted

The NRC staff has reviewed the licensee's request and did not consult other agencies or persons.

Finding of No Significant Impact

The Commission has determined not to prepare an environmental impact statement for the proposed exemption.

Based upon the foregoing environmental assessment, we conclude that the proposed action will not have a significant effect on the quality of the human environment.

For further details with respect to this action, see the application for exemption from 10 CFR part 50, appendix J, dated April 5 1990, which is available for public inspection at the Commission's Public Document Room, 2120 L Street NW., Washington DC, and at the Swem Library, College of William and Mary, Williamsburg, Virginia 23185.

Dated at Rockville, Maryland, this 31 day of July 1990.

For the Nuclear Regulatory Commission.

Herbert N. Berkow, Director,

Project Directorate II–2, Division of Reactor Projects—I/II, Office of Nuclear Reactor Regulation.

[FR Doc. 90–18267 Filed 8–3–90; 8:45 am]

BILLING CODE 7590–01–M

[Docket No. 50–458]

Gulf States Utilities Co.; Issuance of Amendment to Facility Operating License

The Nuclear Regulatory Commission (Commission) has issued Amendment No. 44 to Operating License No. NPF–47 issued to Gulf States Utilities Company, which revised the Technical Specifications for operation of the River Bend Station, Unit No. 1, located in West Feliciana Parish, Louisiana.

The amendment is effective as of the date of issuance.

The amendment revised the Technical Specifications to increase the operating suppression pool temperature limit from 95 °F to 100 °F.

The application for the amendment complies with with the standards and requirements of the Atomic Energy Act of 1954, as amended (the Act), and the Commission's rules and regulations. The Commission has made appropriate findings as required by the Act and the Commission's rules and regulations in 10 CFR Chapter I, which are set forth in the license amendment.

Notice of Consideration of Issuance of Amendment and Opportunity for Hearing in connection with this action was published in the **Federal Register** on June 13, 1990 (55 FR 24013). No request for a hearing or petition for leave to intervene was filed following this notice.

The Commission has prepared an Environmental Assessment related to the action and has determined not to prepare an environmental impact statement. Based upon the environmental assessment, the Commission has concluded that the issuance of this amendment will not have a significant effect on the quality of the human environment.

For further details with respect to the action, see (1) the application for amendment dated May 14, 1990, and supplemented by letter dated June 26, 1990, (2) Amendment No. 44 to License No. NPF–47, (3) the Commission's related Safety Evaluation, and (4) the Commission's Environmental Assessment. All of these items are available for public inspection at the Commission's Public Document Room, 2120 L Street NW., Washington, DC, and at the Government Documents Department, Louisiana State University, Baton Rouge, Louisiana 70803. A copy of items (2), (3) and (4) may be obtained upon request addressed to the U.S. Nuclear Regulatory Commission, Washington, DC 20555, Attention: Director, Division of Reactor Projects—III, IV, V and Special Projects.

Dated at Rockville, Maryland, this 30th day of July 1990.

For the Nuclear Regulatory Commission.

Claudia M. Abbate,

Project Engineer, Project Directorate IV–2, Division of Reactor Projects—III, IV, V and Special Projects, Office of Nuclear Reactor Regulation.

[FR Doc. 90–18268 Filed 8–3–90; 8:45 am]

BILLING CODE 7590–01–M

[Docket No. 50–461]

Illinois Power Co. et al.; Notice of Withdrawal of Application for Amendment to facility Operating License

The United States Nuclear Regulatory Commission (the Commission) has granted the request of Illinois Power Company and Soyland Power Cooperative, Inc. to withdraw a part of its February 5, 1988 application for proposed amendment to Facility Operating License No. NPF–62 for the Clinton Power Station, Unit No. 1, located in DeWitt County, Illinois.

The proposed amendment would have revised the License Condition 2.E concerning certain security plan requirements.

The Commission has proviously issued a Notice of Consideration of Issuance of Amendment and Proposed No Significant Hazards Consideration Determination published in the **Federal Register** on December 14, 1988 (53 FR 50327). However, by telephone conversation on July 3, 1990, the licensee withdrew the proposed change.

For further details with respect to this action, see the application for amendment dated February 5, 1988, and Amendment No. 41 to Facility Operating Licensee No. NPF–62 which granted the balance of the licensee's requested change and addressed the withdrawal of the proposed change to License Condition 2.E. The above documents are available for public inspection at the Commission's Public Document room, 2120 L Street, NW., Washington, DC, and the Vespasian Warner Public

Library, 120 West Johnson Street, Clinton, Illinois 61727.

Dated at Rockville, Maryland this 30th day of July 1990.

For the Nuclear Regulatory Commission.

Robert S. Samworth,

Acting Director, Project Directorate III–3 Division of Reactor Projects—III, IV, V and Special Projects Office of Nuclear Reactor Regulation.

[FR Doc. 90–18269 Filed 8–3–90; 8:45 am]

BILLING CODE 7590–01–M

[Docket No. 50–461]

Illinois Power Co. and Soyland Power Cooperative, Inc., Consideration of Issuance of Amendment to Facility Operating License and Proposed No Significant Hazards Consideration Determination and Opportunity for Hearing

The U.S. Nuclear Regulatory Commission (the Commission) is considering issuance of an amendment to Facility Operating License No. NPF–62, issued to Illinois Power Company and Soyland Power Cooperative, Inc. (the licensees), for operation of the Clinton Power Station located in DeWitt County, Illinois.

The amendment would revise Technical Specification Table 4.8.1.1.2–1 to allow a reduced frequency of Diesel Generator testing when recent testing indicates that improved reliability has been achieved. Specifically, the existing note allowing reduced testing when the last seven tests have been failure free and there has been only one valid failure in the last 20 tests will be modified such that the note applies even when the number of failures in the last 100 tests is five or greater. In addition, the amendment would revise Technical Specification Section 4.8.1.1.3 to allow the reporting of failures to be based on statistics kept per diesel generator rather than on a per nuclear unit basis.

The licensees have requested that this amendment request be handled on an expedited basis for the following reasons. First, the licensees want to avoid what they believe to be excessive wear on the diesel generator due to unnecessary testing. One of the facility diesel generators is currently in the required accelerated test frequency although the last nine tests have been failure free and there has been only one failure in the last 20 tests. They have provided supporting evidence for their contention that the cause of the earlier failure has been corrected and the one failure in the last 20 tests was due to an unrelated occurrence of valve misposition. In addition, the licensees want to assure that the accelerated testing is not making a problem which may become apparent when the frequency of testing is reduced.

Before issuance of the proposed license amendment, the Commission will have made findings required by the Atomic Energy Act of 1954, as amended (the Act) and the Commission's regulations.

The Commission has made a proposed determination that the amendment request involves no significant hazards consideration. Under the Commission's regulations in 10 CFR 50.92, this means that operation of the facility in accordance with the proposed amendment would not (1) involve a significant increase in the probability or consequences of an accident previously evaluated; or (2) create the possibility of a new or different kind of accident from any accident previously evaluated; or (3) involve a significant reduction in a margin of safety.

The proposed changes to the test frequency requirements will still require that reliable operation of the diesel generator has been demonstrated prior to resuming monthly surveillance testing. The proposed changes to the reporting requirements in no way affect diesel generator operation. Maintaining acceptable reliability of diesel generators assures that they will reliably perform their function of providing emergency standby power for safety systems designed to mitigate the consequences of accidents. Therefore, these proposed changes do not result in any significant increase in the probability or consequences of any accident previously evaluated.

The proposed changes do not result in any change to the plant design or operation which could introduce a new failure mode. Therefore, these proposed changes do not create the possibility of a new or different kind of accident from any accident previously evaluated.

The reduction of test induced degradation of the diesel generators, following a demonstration that the reliability has been restored, should result in an increase in the margin of safety with respect to reliability. Therefore, these proposed changes do not result in a significant reduction in a margin of safety.

Accordingly, the Commission proposes to determine that this change does not involve a significant hazards consideration.

The Commission is seeking public comments on this proposed determination. Any comments received within fifteen (15) days after the date of publication of this notice will be considered in making any final determination. The Commission will not normally make a final determination unless it receives a request for a hearing.

Written comments may be submitted by mail to the Regulatory Publications Branch, Division of Freedom of Information and Publications Services, Office of Administration, U.S. Nuclear Regulatry Commission, Washington, DC 20555, and should cite the publication date and page number of this Federal Register notice.

Written comment may also be delivered to Room P–223, Phillips Building, 7920 Norfolk Avenue, Bethesda, Maryland, from 7:30 a.m. to 4:15 p.m. Copies of written comments received may be examined at the NRC Public Document Room, the Gelman Building, 2120 L Street NW., Washington, DC. The filing of requests for hearing and petitions for leave to intervene is discussed below.

By August 22, 1990, the licensee may file a request for a hearing with respect to issuance of the amendment to the subject facility operating license and any person whose interest may be affected by this proceeding and who wishes to participate as a party in the proceeding must file a written request for hearing and a petition for leave to intervene. Requests for a hearing and petitions for leave to intervene shall be filed in accordance with the Commission's "Rules of Practice for Domestic Licensing Proceedings" in 10 CFR part 2. Interested persons should consult a current copy of 10 CFR 2.714 which is available at the Commission's Public Document Room, the Gelman Building, 2120 L Street NW., Washington, DC 20555 and at the Local Public Document Room located at Vespasian Warner Public Library, 120 West Johnson Street, Clinton, Illinois 61727. If a request for a hearing or petition for leave to intervene is filed by the above date, the Commission or an Atomic Safety and Licensing Board, designated by the Commission or by the Chairman of the Atomic Safety and Licensing Board Panel, will rule on the request and/or petition; and the Secretary or the designated Atomic Safety and Licensing Board will issue a notice of hearing or an appropriate order.

As required by 10 CFR 2.714, a petition for leave to intervene shall set forth with particularity the interest of the petitioner in the proceeding, and how that interest may be affected by the results of the proceeding. The petition should specifically explain the reasons why intervention should be permitted with particular reference to the

following factors: (1) the nature of the petitioner's right under the Act to be made a party to the proceeding; (2) the nature and extent of the petitioner's property, financial, or other interest in the proceeding; and (3) the possible effect of any order which may be entered in the proceeding on the petitioner's interest. The petition should also identify the specific aspect(s) of the subject matter of the proceeding as to which petitioner wishes to intervene. Any person who has filed a petition for leave to intervene or who has been admitted as a party may amend the petition without requesting leave of the Board up to fifteen (15) days prior to the first pre-hearing conference scheduled in the proceeding, but such an amended petition must satisfy the specificity requirements described above.

Not later than fifteen (15) days prior to the first prehearing conference scheduled in the proceeding, a petitioner shall file a supplement to the petition to intervene, which must include a list of the contentions that are sought to be litigated in the matter. Each contention must consist of a specific statement of the issue of law or fact to be raised or controverted. In addition, the petitioner shall provide a brief explanation of the bases of the contention and a concise statement of the alleged facts or expert opinion which support the contention and on which the petitioner intends to rely in proving the contention at the hearing. The petitioner must also provide references to those specific sources and documents of which the petitioner is aware and on which the petitioner intends to rely to establish those facts or expert opinion. Petitioner must provide sufficient information to show that a genuine dispute exists with the applicant on a material issue of law or fact. Contentions shall be limited to matters within the scope of the amendment under consideration. The contention must be one which, if proven, would entitle the petitioner to relief. A petitioner who fails to file such a supplement which satisfies these requirements with respect to at least one contention will not be permitted to participate as a party.

Those permitted to intervene become parties to the proceeding, subject to any limitations in the order granting leave to intervene, and have the opportunity to participate fully in the conduct of the hearing, including the opportunity to present evidence and cross-examine witnesses.

If the amendment is issued before the expiration of 30 days, the Commission will make a final detemination on the issue of no significant hazards considerations. If a hearing is requested, the final determination will serve to decide when the hearing is held.

If the final determination is that the amendment request involves a no significant hazards consideration, the Commission may issue the amendment and make it effective, notwithstanding the request for a hearing. Any hearing held would take place after issuance of the amendment.

If the final determination is that the amendment request involves a significant hazards consideration, any hearing held would take place before the issuance of any amendment.

Normally, the Commission will not issue the amendment until the expiration of the 15-day notice period. However, should circumstances change during the notice period, such that failure to act in a timely way would result, for example, in derating or shutdown of the facility, the Commission may issue the license amendment before the expiration of the 15-day notice period, provided that its final determination is that the amendment involves no significant hazards consideratons. The final determination will consider all public and State comments received. Should the Commission take this action, it will publish in the **Federal Register** a notice of issuance. The Commission expects that the need to take this action will occur very infrequently.

A request for a hearing or a petition for leave to intervene must be filed with the Secretary of the Commission, U.S. Nuclear Regulatory Commission, Washington, DC 20555, Attention: Docketing and Service Branch, or may be delivered to the Commission's Public Document Room, the Gelman Building, 2120 L Street NW., Washington, DC, by the above date. Where petitions are filed during the last ten (10) days of the notice period, it is requested that the petitioner promptly so inform the Commission by a toll-free telephone call to Western Union at 1 (800) 325–6000 (in Missouri 1 (800) 342–6700). The Western Union operator should be given Datagram Identification Number 3737 and the following message addressed to John N. Hannon: petitioner's name and telephone number; date petition was mailed; plant name; and publication date and page number of this Federal Register notice. A copy of the petition should also be sent to the Office of the General Counsel, U.S. Nuclear Regulatory Commission, Washington, DC 20555, and to Sheldon Zabel, Esq., Schiff, Hardin and Waite, 7200 Sears Tower, 233 Wacker Drive, Chicago, Illinois 60606, attorney for the licensee.

Nontimely filings of petitions for leave to intervene, amended petitions, supplemental petitions and/or requests for hearing will not be entertained absent a determination by the Commission, the presiding officer or the presiding Atomic Safety and Licensing Board that the petition and/or request should be granted based upon a balancing of the factors specified in 10 CFR 2.714(a)(1)(i)-(v) and 2.714(d).

For further details with respect to this action, see the application for amendment dated June 11, 1990, which is available for public inspection at the Commission's Public Document Room, the Gelman Building, 2120 L Street, NW., Washington, DC 20555, and at the Local Public Document Room, Vespasian Warner Public Library, 120 West Johnson Street, Clinton, Illinois 61727.

Dated at Rockville, Maryland, this 1st day of August 1990.

For the Nuclear Regulatory Commission

John N. Hannon,

Director, Project Directorate III–3 Division of Reactor Project—III, IV, V and Special Projects, Office of Nuclear Reactor Regulations.

[FR Doc. 90–18270 Filed 8–3–90; 8:45 am]

BILLING CODE 7590–01–M

[Docket No. 50–322]

Long Island Lighting Co.; Notice of Issuance of Amendment to Facility Operating License and Final Determination of No Significant Hazards Consideration

The U.S. Nuclear Regulatory Commission (Commission) has issued Amendment No. 6 to Facility Operating License No. NPF–82, issued to Long Island Lighting Company (the licensee), which revised the license for operation of the Shoreham Nuclear Power Station, Unit 1 (the facility) located in Suffolk County, New York. The amendment was effective as of the date of its issuance.

The amendment added on page 6 of Facility Operating License No. NPF–82, immediately following the text of license condition 2.C(13), a new license condition 2.C(14), to read as follows:

2.C(14) Defueled Emergency Preparedness License Condition. The requirements set forth in license conditions (9) through (13) will not apply if the following conditions exist: (1) The reactor is void of all fuel assemblies; and (2) The spent fuel, with a burnup of approximately two effective full-power days, is stored in the spent fuel storage pool or other approved storage configuration.

The application for the amendment complies with the standards and requirements of the Atomic Energy Act

of 1954, as amended (the Act), and the Commission's rules and regulations. The Commission has made appropriate findings as required by the Act and the Commission's rules and regulations in 10 CFR Chapter I, which are set forth in the license amendment.

Notice of Consideration of Issuance of Amendment and Proposed No Significant Hazards Consideration Determination and Opportunity for Hearing in conenction with this action was published in the Federal Register on March 30, 1990 (55 FR 12076). Requests for a hearing were filed on April 30, 1990 by the Shoreham-Wading River Central School District and Scientists and Engineers for Secure Energy, Inc.

Under its regulations, the Commission may issue and make an amendment immediately effective, notwithstanding the pendency before it of a request for a hearing from any person, in advance of the holding and completion of any required hearing, where it has determined that no significant hazards consideration is involved.

The Commission has applied the standards of 10 CFR 50.92 and has made a final determination that the amendment involves no significant hazards consideration. The basis for this determination is contained in the Safety Evaluation related to this action. Accordingly, as described above, the amendment has been issued and made immediately effective and any hearing will be held after issuance.

The Commission has prepared an Environment Assessment related to the action and has determined not to prepare an environmental impact statement. Based upon the environmental assessment, the Commission has concluded that the issuance of this amendment will not have a significant effect on the quality of the human environment.

For further details with respect to the action see (1) the application for amendment dated December 15, 1989, (2) Amendment No. 6 to Facility Operating License No. NPF–82, (3) the Commission's related Safety Evaluation, (4) Environmental Assessment and (5) the Exemption dated July 31, 1990. All of these items are available for public inspection at the Commission's Public Document Room, 2120 L Street, NW., Washington, DC, and at the Shoreham-Wading River Public Library, Route 25A, Shoreham, New York 11786–9697. A copy of items (2), (3), (4) and (5) may be obtained upon request addressed to the U.S. Nuclear Regulatory Commission, Washington, DC 20555, Attention: Director, Division of Reactor Projects I/II.

Dated at Rockville, Maryland, this 31st day of July 1990.

For the Nuclear Regulatory Commission.

Walter R. Butler,

Director, Project Directorate I–2, Division of Reactor Projects—I/II, Office of Nuclear Reactor Regulation.

[FR Doc. 90–18271 Filed 8–3–90; 8:45 am]

BILLING CODE 7590–01–M

[Docket No. 50–322]

Long Island Lighting Co. (Shoreham Nuclear Power Station, Unit 1); Exemption

I.

Long Island Lighting Company (LILCO or the licensee) is the holder of Facility Operating License No. NPF–82, which authorizes operation of Shoreham Nuclear Power Station (the facility) at steady-state reactor power levels not in excess of 2,436 megawatts thermal. The license provides, among other things, that it is subject to all rules, regulations and Orders of the Nuclear Regulatory Commission (the Commission or NRC) now or hereafter in effect. The facility consists of a boiling water reactor located at the licensee's site in Suffolk County, New York. The facility is currently shut down and defueled.

II.

Section 50.54(q) of 10 CFR part 50 requires a licensee authorized to operate a nuclear power reactor to follow and maintain in effect emergency plans which meet the standards of 10 CFR 50.47(b) and the requirements of appendix E to 10 CFR part 50. Section 50.47(b) provides that both offsite and onsite emergency plans must meet the standards specified in subparagraphs (1) through (16) of § 50.47(b). With respect to offsite emergency preparedness, LILCO states that an exemption from § 50.54(q) is necessary because, with the elimination of the Local Emergency Response Organization (LERO) and the cessation of offsite emergency planning for Shoreham, LILCO will no longer meet the emergency preparedness standards for offsite preparedness that are listed in § 50.47(b) and in appendix E to 10 CFR part 50. With respect to onsite preparedness, LILCO states that an exemption is necessary because, given certain changes associated with the implementation of the Defueled Emergency Preparedness Plan (DEPP), LILCO will no longer meet some of the standards specified in § 50.47(b) (3), (5), and (7). In particular, LILCO will not meet the standards for onsite preparedness because under the DEPP the Emergency Operations Facility will be eliminated, the prompt notification (siren) system will not be utilized, and public information materials will not be distributed to residents of the 10-mile Emergency Planning Zone.

The NRC may grant exemptions from the requirements of the regulations which, pursuant to 10 CFR 50.12(a), are authorized by law, will not present an undue risk to the public health and safety, and are consistent with the common defense and security. Further, 10 CFR 50.12(a)(2) provides that the Commission will not consider granting an exemption unless special circumstances are present. At least two of the special circumstances enumerated in 10 CFR 50.12(a)(2) apply to Shoreham's situation:

> (ii) Application of the regulation in the particular circumstances would not serve the underlying purpose of the rule and is not necessary to achieve its underlying purpose; and
>
> (iii) Compliance would result in undue hardship or other costs that are significantly in excess of those contemplated when the regulation was adopted or that are significantly in excess of those incurred by others similarly situated.

III.

By letter dated December 15, 1989, the licensee requested an exemption from the emergency preparedness requirements of 10 CFR 50.54(q) based on the facility's defueled condition. The licensee referenced in its letter the Settlement Agreement with the State of New York whereby Shoreham would not be operated under LILCO ownership. As part of the agreement, the Shoreham reactor has been defueled and all irradiated fuel has been stored in the Spent Fuel Pool. In a letter to the NRC dated January 12, 1990, the licensee committed to not place nuclear fuel back in the Shoreham reactor without prior NRC approval. On March 29, 1990, the NRC issued a confirmatory order prohibiting the licensee from placing any nuclear fuel into the Shoreham reactor without prior approval from the NRC. (55 FR 12758)

The licensee's December 15, 1989 submittal included a technical report, "Radiological Safety Analysis for Spent Fuel Storage and Handling," which assesses the radiological consequences of fuel handling accidents for Shoreham in its present defueled configuration. The safety analysis establishes that Shoreham's spent fuel is in a low burnup condition (equivalent to two full power days) and that the amount of decay heat being generated by the fuel in the spent fuel pool as of June 1989 is negligible—approximately 550 watts. With the fuel in such a low burnup condition, the

safety analysis indicates that active systems for pool water makeup are not required and that passive cooling in the fuel pool is sufficient to maintain fuel cladding integrity.

Based on its safety analysis, LILCO has determined that the consequences of previously evaluated accidents are greatly decreased given Shoreham's nonoperating, defueled status. The safety analysis reviews the spectrum of accidents evaluated in the Shoreham Updated Safety Analysis Report (USAR) and identifies those events that apply to the storage and handling of spent fuel. Two events have been found to be relevant: (1) Fuel-Handling Accident [USAR Section 15.1.36], and (2) Liquid Radwaste Tank Rupture [USAR Section 15.1.32]. For the Fuel-Handling Accident, the Safety analysis calculates that the integrated whole body dose (1.74E–06 rem) is well below the Environmental Protection Agency's Protective Action Guides (EPA PAGs) for protecting the public from exposure (1–5 rem whole body dose). For the Liquid Radwaste Tank Rupture, the whole body dose (1.80E–08 rem) is also much less than the EPA PAG limits. The safety analysis also postulates a "worst case" radiological event, in which the total gaseous inventory of the core is released. For this event the whole body dose (1.08E–03 rem) is still well below the EPA PAG limits.

Based on a review of LILCO's analysis of possible events at Shoreham, the Commission concurs with the analysis and concludes that there is no credible accident for Shoreham in the defueled condition which could result in the release of radioactive materials to the environment in quantities which would require protective actions for the public.

The licensee intends to maintain a level of emergency preparedness that is commensurate with the lessened risks associated with a defueled Shoreham when the licensee receives the requested exemption. The licensee's submittal includes a proposed Defueled Emergency Preparedness Plan (DEPP) which LILCO would implement in lieu of the current Shoreham Nuclear Power Station Emergency Preparedness Plan. In conjunction with implementation of the DEPP, LILCO will disband the Local Emergency Response Organization (LERO) and cease all offsite emergency planning and preparedness activities for Shoreham.

The NRC staff has reviewed the Defueled Emergency Preparedness Plan based on the acceptance criteria included in the planning standards of 10 CFR 50.47(b), the requirements of appendix E to 10 CFR part 50, and the guidance criteria of NUREG–065/FEMA–REP–1, Revision 1, "Criteria for Preparation and Evaluation of Radiological Emergency Response Plans and Procedures in Support of Nuclear Power Plants," dated November, 1980. The staff review took into consideration the current defueled condition and inherent low risk of Shoreham. The NRC staff also reviewed the Defueled Emergency Preparedness Plan based on the requirements of 10 CFR 50.47(d) for a license authorizing only fuel loading and low power testing. The requirements of 10 CFR 50.47(d) address the lower risk associated with low power operation and are generally appropriate for reviewing the offsite aspects of the Defueled Emergency Preparedness Plan.

Based on this review, the Commission has concluded that the Shoreham Defueled Emergency Preparedness Plan provides an adequate basis for an acceptable state of emergency preparedness for Shoreham in its non-operating and defueled condition, and the plan provides reasonable assurance that adequate protective measures can and will be taken in the event of a radiological emergency at Shoreham.

IV.

The licensee's request for exemption, based on the standards set forth in 10 CFR 50.12, is reasonable in light of the highly reduced offsite radiological risk associated with Shoreham's non-operating and defueled condition. The requested exemption is (1) authorized by law, is consistent with the common defense and security, and will not present an undue risk to the public health and safety, and (2) presents special circumstances.

Regarding the existence of special circumstances which justify the exemption, 10 CFR 50.12(a)(2)(ii) applies to Shoreham's situation. For operating nuclear plants, emergency planning is essential to safety and the NRC's emergency planning regulations exist to ensure that adequate protective measures can and will be taken to protect the public health and safety in the event of a radiological emergency. The Commission concurs in LILCO's analysis that no credible accident can occur at Shoreham in its defueled configuration that would adversely affect the public health and safety in terms of offsite emergency preparedness. Considering the defueled condition and low-burnup fuel at Shoreham, requiring LILCO to continue to meet the full range of NRC's emergency planning regulations is not necessary in order to achieve the underlying purpose of 10 CFR 50.54(q). With the level of emergency preparedness provided by the DEPP, LILCO will be fully capable of responding adequately to the spectrum of credible accidents that could occur at Shoreham in its defueled condition.

10 CFR 50.12(a)(2)(iii) also applies to Shoreham's situation. The licensee states that it spends approximately $7 million annually to maintain its current level of emergency preparedness. In compliance with 10 CFR 50.54(q) and certain conditions in Shoreham's license, the LERO organization continues to be maintained and trained to respond to an accident that cannot credibly occur at Shoreham in its defueled condition. Currently, LILCO is required to regularly train LERO workers and conduct drills on a quarterly basis. Moreover, in the absence of an exemption, LILCO will be required, pursuant to 10 CFR part 50, Appendix E.IV.F, to conduct a full participation exercise of its offsite emergency plan by the end of 1990. Conducting such an exercise, which would also involve the Federal Emergency Management Agency and the NRC, would require an extensive amount of resources and effort. Based on Shoreham's defueled, low-burnup condition, this expenditure is unnecessary and presents an undue hardship on the licensee.

For these reasons, the Commission has determined that, pursuant to 10 CFR 50.12, (1) the exemption requested by the licensee's letter dated December 15, 1989, is authorized by law, will not present an undue risk to the public health and safety, and is consistent with the common defense and security, and (2) special circumstances are present as described above.

Accordingly, the Commission hereby grants the following exemption:

> The Shoreham Nuclear Power Station is exempt from the requirements of 10 CFR 50.54(q) for emergency preparedness, provided that: (1) the reactor is void of all fuel assemblies; (2) the spent fuel, with a burnup of approximately two effective full-power days, is stored in the spent fuel storage pool, or other approved storage configuration; and (3) the Shoreham Nuclear Power Station Defueled Emergency Preparedness Plan is implemented.

This Exemption will remain in effect unless and until revoked by the Commission.

Pursuant to 10 CFR 51.32, the Commission has previously determined that the granting of this Exemption will have no significant impact on the environment (55 FR 31111).

This exemption is effective upon issuance.

For the Nuclear Regulatory Commission.

Dated at Rockville, Maryland, this 31st day of July, 1990.

Steven A. Varga,

Director, Division of Reactor Projects—I/II, Office of Nuclear Reactor Regulation.

[FR Doc. 90–18272 Filed 8–3–90; 8:45 am]

BILLING CODE 7590–01–M

[Docket No. 50–423]

Northeast Nuclear Energy Co. et al.; Consideration of Issuance of Amendment to Facility Operating License and Proposed No Significant Hazards Consideration Determination and Opportunity for Hearing

The U.S. Nuclear Regulatory Commission (the Commission) is considering issuance of an amendment to Facility Operating License No. NPF–49, issued to Northeast Nuclear Energy Company, et al. (the licensee) for operation of Millstone Unit No. 3 located in New London County, Connecticut.

Millstone Unit 3 Technical Specification (TS) 4.6.6.1.a requires that each of two Supplemental Leak Collection and Release Systems (SLCRS) demonstrate a flow rate of 9,500 cfm ±10% every 31 days on staggered test basis.

On July 16, 1990, the 'B' SLCRS fan failed its monthly performance (Surveillance 4.6.6.1.a) test with 85 percent of 9,500 cfm. The minimum required flow per Surveillance 4.6.6.1.a is 9,500 cfm ±10 percent. The "B" SLCRS train was declared inoperable, and the plant entered a 7-day ACTION statement per the requirements of TS 3.6.6.1. On July 20, 1990, the licensee submitted an application for license amendment and request for temporary waiver concerning the requirements of TS 3/4.6.6.1. The application for license amendment would incorporate a revised SLCRS flow rate, based upon testing completed on July 20, 1990, in TS 4.6.6.1.a, 4.6.6.1.b. 1 and 3, 4.6.6.1.d.1, 4.6.6.1.e and 4.6.6.1.f.

Section 6.5.1.2 of the Millstone Unit 3 FSAR indicates that:

> The SLCRS system is designed to maintain a 0.25 inch [water gage] wg negative pressure in the containment enclosure building and associated contiguous structures (auxiliary building, ESF building, main steam valve building, and hydrogen recombiner building) during LOCA. This is accomplished by exhausting air from these areas passing it through a charcoal filter assembly before releasing to atmosphere.

One purpose of the Surveillance Requirements of TS 3/4.6.6.1 is to demonstrate that SLCRS will attain adequate flow to produce the required 0.25 inch wg negative pressure within 60 seconds following a LOCA (50 seconds from a system start signal). The licensee indicated in its July 20, 1990, letter that the required SLCRS flow rate of 9,500 cfm ±10% is based upon blower nameplate data rather than test requirements flow rate data. On July 20, 1990, the licensee tested the SLCRS and found that a flow rate of 7,040 scfm would produce a 0.25 inch wg negative pressure in less than 30 seconds. The licensee proposed a SLCRS flow rate of 7,600 cfm to 9,800 cfm to replace the 9.500 cfm ±10% requirement of TS 3/5.6.6.1. The NRC staff issued a Temporary Waiver of Compliance regarding TS 3.6.6.1 on July 23, 1990.

Before issuance of the proposed license amendment, the Commission will have made findings required by the Atomic Energy Act of 1954, as amended (the Act), and the Commisson's regulations.

The Commission has made a proposed determination that the July 20, 1990, amendment request involves no significant hazards considerations. Under the Commission's regulations in 10 CFR 50.92, this means that operation of the facility in accordance with the proposed amendment would not: (1) Involve a significant increase in the probability or consequences of an accident previously evaluated; or (2) create the possibility of a new or different kind of accident from any accident previously evaluated; or (3) involve a significant reduction in a margin of safety.

The licensee has determined that the Technical Specifications Change Request involves no significant hazards considerations as defined in 10 CFR 50.92. That determination is as follows:

The proposed change does not involve a significant consideration because the change would not:

1. Involve a significant increase in the probability or consequences of an accident previously analyzed.

In the event of a DBA such as loss-of-coolant accident (LOCA), activity is released to the containment atmosphere. The SLCRS collects most of the primary containment leakage from the buildings contiguous to the containment, filters it, and releases it to the atmosphere through the Millstone Unit No. 1 stack. The SLCRS is not normally in operation. The SLCRS starts on an SIS and is required by Technical Specification 4.6.6.1.d.3 to be able to draw −0.25 inch wg in the annulus within 50 seconds after a start signal. In the accident analysis for Millstone Unit No. 3 (FSAR Section 15.6.5.4), it is assumed that the SLCRS will be able to achieve −0.25 inch wg pressure in the annulus within 60 seconds. Until this time, it is assumed that all of the containment leakage is an unfiltered ground level release. After the negative pressure is attained, only a small fraction of containment leakage (e.g., secondary containment bypass leakage) is not assumed to be processed by the SLCRS. With the reduced flow rate, the SLCRS will still be capable of meeting the existing Technical Specification surveillance requirements. Therefore, the proposed change will have no impact on the ability of the SLCRS to meet the performance requirements as assumed in the design basis analysis.

The proposed revised flow rate will not change the assumptions of the radiological consequence analysis concerning the filter efficiencies. Therefore, the proposed change will not adversely affect the calculated off-site doses. In addition, the proposed change does not have an impact on the probability of an accident.

2. Create the possibility of a new or different kind of accident from that previously analyzed.

The proposed change will have no impact on plant response. No physical design changes are proposed. Only the minimum flow rate specified in the surveillance requirement is affected. As discussed above, even at the lower flow rate, the SLCRS will perform as assumed in the design basis analysis. There are no few failure modes introduced.

3. Involve a significant reduction in a margin of safety.

The proposed change has no direct impact on any protective boundaries. As discussed above, the proposed change will not affect the ability of the SLCRS to perform its safety function as assumed in the design basis analysis. The proposed change does not affect the consequences of any accident previously analyzed. Therefore, there is no significant reduction in the margin of safety.

The staff has reviewed the licensee's no significant hazards consideration determination analysis and agrees with its conclusion. Therefore, the staff proposes to determine that the application for amendment does not involve a significant hazards consideration.

The Commission is seeking public comments on this proposed determination. Any comments received within fifteen (15) days after the date of publication of this notice will be considered in making any final determination. The Commission will not normally make a final determination unless it receives a request for a hearing.

Written comments may also be delivered to Room P–223, Phillips Building, 7920 Norfolk Avenue, Bethesda, Maryland, from 7:30 a.m. to 4:15 p.m. Copies of written comments received may be examined at the NRC Public Document Room, the Gelman Building, 2120 L Street NW., Washington, DC. The filing of requests for hearing and petitions for leave to intervene is discussed below.

By September 5, 1990, the licensee may file a request for a hearing with respect to issuance of the amendment to the subject facility operating license and

any person whose interest may be affected by this proceeding and who wishes to participate as a party in the proceeding must file a written petition for leave to intervene. Request for a hearing and petitions for leave to intervene shall be filed in accordance with the Commission's "Rules of Practice for Domestic Licensing Proceedings" in 10 CFR part 2. Interested persons should consult a current copy of 10 CFR 2.714 which is available at the Commission's Public Document Room, the Gelman Building, 2120 L Street, NW, Washington, DC 20555 and at the Local Public Document Room located at the Learning Resources Center, Thames Valley State Technical College, 574 New London Turnpike, Norwich, Connecticut 06360. If a request for a hearing or petition for leave to intervene is filed by the above date, the Commission or an Atomic Safety and Licensing Board, designated by the Commission or by the Chairman of the Atomic Safety and Licensing Board Panel, will rule on the request and/or petition and the Secretary or the designated Atomic Safety and Licensing Board will issue a notice of hearing or an appropriate order.

As required by 10 CFR 2.714, a petition for leave to intervene shall set forth with particularly the interest of the petitioner in the proceeding, and how that interest may be affected by the results of the proceeding. The petition should specifically explain the reasons why intervention should be permitted with particular reference to the following factors: (1) The nature of the petitioner's right under the Act to be made party to the proceeding; (2) the nature and extent of the petitioner's property, financial, or other interest in the proceeding; and (3) the possible effect of any order which may be entered in the proceeding on the petitioner's interest. The petition should also identify the specific aspect(s) of the subject matter of the proceeding as to which petitioner wishes to intervene. Any person who has filed a petition for leave to intervene or who has been admitted as a party may amend the petition without requesting leave of the Board up to fifteen (15) days prior to the first prehearing conference scheduled in the proceeding, but such an amended petition must satisfy the specificity requirements described above.

Not later than fifteen (15) days prior to the first prehearing conference scheduled in the proceeding, a petitioner shall file a supplement to the petition to intervene which must include a list of the contentions which are sought to be litigated in the matter. Each contention must consist of a specific statement of the issue of law or fact to be raised or controverted. In addition, the petitioner shall provide a brief explanation of the bases of the contention and a concise statement of the alleged facts or expert opinion which support the contention and on which the petitioner intends to rely in proving the contention at the hearing. The petitioner must also provide references to those specific sources and documents of which the petitioner is aware and on which the petitioner intends to rely to establish those facts or expert opinion. Petitioner must provide sufficient information to show that a genuine dispute exists with the applicant on a material issue of law or fact. Contentions shall be limited to matters within the scope of the amendment under consideration. The contention must be one which, if proven, would entitle the petitioner to relief. A petitioner who fails to file such a supplement which satisfies these requirements with respect to at least one contention will not be permitted to participate as a party.

Those permitted to intervene become parties to the proceeding, subject to any limitations in the order granting leave to intervene, and have the opportunity to participate fully in the conduct of the hearing, including the opportunity to present evidence and cross-examine witnesses.

If the amendment is issued before the expiration of 30-days, the Commission will make a final determination on the issue of no significant hazards consideration. If a hearing is requested, the final determination will serve to decide when the hearing is held.

If the final determination is that the amendment request involves no significant hazards consideration, the Commission may issue the amendment and make it effective, notwithstanding the request for a hearing. Any hearing held would take place after issuance of the amendment.

If the final determination is that the amendment request involves a significant hazards consideration, any hearing held would take place before the issuance of any amendment.

Normally, the Commission will not issue the amendment until the expiration of the 15-day notice period. However, should circumstances change during the notice period, such that failure to act in a timely way would result, for example, in derating or shutdown of the facility, the Commission may issue the license amendment before the expiration of the 15-day notice period, provided that its final determination is that the amendment involves no signficant hazards consideration. The final determination will consider all public and State comments received. Should the Commission take this action, it will publish in the **Federal Register** a notice of issuance. The Commission expects that the need to take this action will occur very infrequently.

A request for a hearing or a petition for leave to intevene must be filed with the Secretary of the Commission, U.S. Nuclear Regulatory Commission, Washington, DC 20555, Attention: Docketing and Services Branch, or may be delivered to the Commission's Public Document Room, the Gelman Building, 2120 L Street NW., Washington, DC, by the above date. Where petitions are filed during the last ten (10) days of the notice period, it is requested that the petitioner promptly so inform the Commission by a toll-free telephone call to Western Union at 1–(800) 325–6000 (in Missouri 1–(800) 342–6700). The Western Union operator should be given Datagram Identification Number 3737 and the following message addressed to John F Stolz: (petitioner's name and telephone number), (date petition was mailed), (plant name), and (publication date and page number of this Federal Register notice). A copy of the petition should also be sent to the Office of the General Counsel, U.S. Nuclear Regulatory Commission, Washington, DC 20555, and to Gerald Garfield, Esquire, Day, Berry & Howard, Counselors at Law, City Place, Hartford, Connecticut 06103–3499, attorney for the licensee.

Nontimely filings of petitions for leave to intervene, amended petitions, supplemental petitions and/or requests for hearing will not be entertained absent a determination by the Commission, the presiding officer or the Atomic Safety and Licensing Board that the petition and/or request should be granted based upon a balancing of the factors specified in 10 CFR 2.714(a)(1)(i)–(v) and 2.714(d).

For further details with respect to this action, see the application for amendment dated July 20, 1990, which is available for public inspection at the Commission's Public Document Room, the Gelman Building, 2120 L Street NW., Washington, DC 20555, and at the Local Public Document Room located at the Learning Resources Center, Thames Valley State Technical College, 574 New London Turnpike, Norwich, Connecticut 06360.

Dated at Rockville, Maryland, this 1st day of August, 1990.

For the Nuclear Regulatory Commission.

David H. Jaffe,

Project Manager, Project Directorate I–4, Division of Reactor Projects—I/II, Office of Nuclear Reactor Regulation.

[FR Doc. 90–18273 Filed 8–3–90; 8:45 am]

BILLING CODE 7590–01–M

[Docket No. 50–311]

Public Service Electric & Gas Co. et al.; Consideration of Issuance of Amendment to Facility Operating License and Proposed No Significant Hazards Consideration Determination and Opportunity for Hearing

The U.S. Nuclear Regulatory Commission (the Commission) is considering issuance of an amendment to Facility Operating License No. DPR–75 issued to Public Service Electric & Gas Company, Philadelphia Electric Company, Delmarva Power and Light Company and Atlantic City Electric Company (the licensees) for operation of the Salem Generating Station, Unit No. 2, located in Salem County, New Jersey.

The proposed amendment would change Table 4.8–1 in the Salem 2 Technical Specifications (TSs) to incorporate the changes recommended by Generic Letter 84–15. This would allow the surveillance testing of diesel generators to be based on the last 20 valid tests per diesel generator instead of the last 100 valid tests per nuclear unit.

Salem Unit 2 has had 4 failures in the last 100 tests and is now required by TSs to test the diesel generators every 3 days on staggered test basis when in Modes 1, 2, 3 or 4. Salem Unit 2 has 3 diesel generators so one diesel generator per day is tested when in Modes 1, 2, 3 and 4. Using the current TSs requirements, 30 consecutive successful starts would be necessary to reduce the test frequency to every 7 days; 34 consecutive successful starts to reduce it to every 14 days; and 35 consecutive successful starts to reduce it to 31 days. In order to prevent excessive diesel generator starts, exigent approval has been requested. The staff, in Generic Letter 82–15, has determined that diesel generator starts result in diesel generator wear. Excessive starts, as represented by these conditions, result in undue wear and stress on the diesel engines without resulting in an increase in safety. By adopting Generic Letter recommendations, the surveillance frequencies are to be reduced to every 31 days per diesel generator in the current situation. Therefore, in order to reduce the number of starts required, this notice is being issued under exigent circumstances.

Before issuance of the proposed license amendment, the Commission will have made findings required by the Atomic Energy Act of 1954, as amended (the Act) and the Commission's regulations.

The Commission has made a proposed determination that the amendment request involves no significant hazards consideration. Under the Commission's regulations in 10 CFR 50.92, this means that operation of the facility in accordance with the proposed amendment would not: (1) Involve a significant increase in the probability or consequences of an accident previously evaluated; or (2) create the possibility of a new or different kind of accident from any accident previously evaluated; or (3) involve a significant reduction in a margin of safety.

The licensee has evaluated the above three factors as part of their request:

The proposed change to Technical Specifications Table 4.8–1 for Salem Unit No. 2:

(1) Does not involve a significant increase in the probability or consequences of an accident previously evaluated. Reducing the test frequency is intended to increase overall diesel reliability by minimizing severe test conditions which can lead to failures. The proposed change will continue to assure availability of the diesels and should serve to enhance the reliability and, consequently, the overall safe operation of the diesel generators.

(2) Do not create the possibility of a new or different kind of accident from any accident previously evaluated. The proposed change affects only EDG testing frequency and has no impact on the accident analysis. No new operating modes or equipment are introduced which could initiate or affect the progression of an accident.

(3) Involve a significant reduction in the margin of safety. The change in the testing frequency does not adversely affect the capability of the diesels to perform their required function. Rather, the purpose of the proposed change is to increase the overall reliability of the diesels consistent with the Generic Letter 84–15.

The staff has reviewed the licensee's analysis and agrees with the no significant hazards determination.

Accordingly, the Commission proposes to determine that this change does not involve a significant hazards consideration.

The Commission is seeking public comments on this proposed determination. Any comments received within 15 days after the date of publication of this notice will be considered in making any final determination. The Commission will not normally make a final determination unless it receives a request for a hearing.

Written comments may be submitted by mail to the Regulatory Publications Branch, Division of Freedom of Information and Publications Services, Office of Administration, U.S. Nuclear Regulatory Commission, Washington, DC 20555, and should cite the publication date and page number of this **Federal Register** notice. Written comments may also be delivered to Room P-223, Phillips Building, 7920 Norfolk Avenue, Bethesda, Maryland, from 7:30 a.m. to 4:15 p.m. Copies of written comments received may be examined at the NRC Public Document Room, the Gelman Building, 2120 L Street NW., Washington, DC. The filing of requests for hearing and petitions for leave to intervene is discussed below.

By August 21, 1990, the licensee may file a request for a hearing with respect to issuance of the amendment to the subject facility operating license and any person whose interest may be affected by this proceeding and who wishes to participate as a party in the proceeding must file a written request for hearing and a petition for leave to intervene. Requests for a hearing and petitions for leave to intervene shall be filed in accordance with the Commission's "Rule of Practice for Domestic Proceedings" in 10 CFR part 2. Interested persons should consult a current copy of 10 CFR 2.714 which is available at the Commission's Public Document Room, the Gelman Building, 2120 L Street NW., Washington, DC 20555 and at the Local Public Document Room located at the Salem Free Public Library, 112 West Broadway, Salem, New Jersey 08079.

If a request for a hearing or petition for leave to intervene is filed by the above date, the Commission or an Atomic Safety and Licensing Board, designated by the Commission or by the Chairman of the Atomic Safety and Licensing Board Panel, will rule on the request and/or petition; and the Secretary or the designated Atomic Safety and Licensing Board will issue a notice of hearing or an appropriate order.

As required by 10 CFR 2.714, a petition for leave to intervene shall set forth with particularly the interest of the petitioner in the proceeding, and how that interest may be affected by the results of the proceeding. The petition should specifically explain the reasons why intervention should be permitted

with particular reference to the following factors: (1) the nature of the petitioner's right under the Act to be made a party to the proceeding; (2) the nature and extent of the petitioner's property, financial, or other interest in the proceeding; and (3) the possible effect of any order which may be entered in the proceeding on the petitioner's interest. The petition should also identify the specific aspect(s) of the subject matter of the proceeding as to which petitioner wishes to intervene. Any person who has filed a petition for leave to intervene or who has been admitted as a party may amend the petition without requesting leave of the Board up to fifteen (15) days prior to the first prehearing conference scheduled in the proceeding, but such an amended petition must satisfy the specificity requirements described above.

Not later than fifteen (15) days prior to the first prehearing conference scheduled in the proceeding, a petitioner shall file a supplement to the petition to intervene which must include a list of the contentions which are sought to be litigated in the matter. Each contention must consist of a specific statement of the issue of law or fact to be raised or controverted. In addition, the petitioner shall provide a brief explanation of the bases of the contention and a concise statement of the alleged facts or expert opinion which support the contention and on which the petitioner intends to rely in proving the contention at the hearing. The petitioner must also provide references to those specific sources and documents of which the petitioner is aware and on which the petitioner intends to rely to establish those facts or expert opinion. Petitioner must provide sufficient information to show that a genuine dispute exists with the applicant on a material issue of law or fact. Contentions shall be limited to matters within the scope of the amendments under consideration. The contention must be one which, if proven, would entitle the petitioner to relief. A petitioner who fails to file such a supplement which satisfies these requirements with respect to at least one contention will not be permitted to participate as a party.

Those permitted to intervene become parties to the proceeding, subject to any limitations in the order granting leave to intervene, and have the opportunity to participate fully in the conduct of the hearing, including the opportunity to present evidence and cross-examine witnesses.

If the amendment is issued before the expiration of 30 days, the Commission will make a final determination on the issue of no significant hazards considerations. If a hearing is requested, the final determination will serve to decide when the hearing is held.

If the final determination is that the amendment request involves no significant hazards consideration, the Commission may issue the amendment and make it effective, notwithstanding the request for a hearing. Any hearing held would take place after issuance of the amendment.

If the final determination is that the amendment request involves significant hazards consideration, any hearing held would take place before the issuance of any amendment.

Normally, the Commission will not issue the amendment until the expiration of the 15-day notice period. However, should circumstances change during the notice period, such that failure to act in a timely way would result, for example, in derating or shutdown of the facility, the Commission may issue the license amendment before the expiration of the 15-day notice period, provided that its final determination is that the amendment involves no significant hazards consideration. The final determination will consider all public and State comments received. Should the Commission take this action, it will publish a notice of issuance. The Commission expects that the need to take this action will occur very infrequently.

A request for a hearing or a petition for leave to intervene must be filed with the Secretary of the Commission, U.S. Nuclear Regulatory Commission, Washington, DC 20555, Attention: Docketing and Service Branch, or may be delivered to the Commission's Public Document Room, the Gelman Building, 2120 L Street, NW., Washington, DC, by the above date. Where petitions are filed during the last ten (10) days of the notice period, it is requested that the petitioner promptly so inform the Commission by a toll-free telephone call to Western Union at 1–(800) 325–6000 (in Missouri 1–(800) 342–6700). The Western Union operator should be given Datagram Identification Number 3737 and the following message addressed to Walter R. Butler: petitioner's name and telephone number; date petition was mailed; plant name; and publication date and page number of this **Federal Register** notice. A copy of the petition should also be sent to the Office of the General Counsel, U.S. Nuclear Regulatory Commission, Washington, DC 20555, and to Bishop, Cook, Purcell & Reynolds, 1400 L Street, NW., Washington, DC 20555–3052, attorney for the licensee.

Nontimely filings of petitions for leave to intervene, amended petitions, supplemental petitions and/or requests for hearing will not be entertained absent a determination by the Commission, the presiding officer or the presiding Atomic Safety and Licensing Board that the petition and/or request should be granted based upon a balancing of the factors specified in 10 CFR 2.714(a)(1) (i)–(v) and 2.714(d).

For further details with respect to this action, see the application for amendment dated July 27, 1990, which is available for public inspection at the Commission's Public Document Room, the Gelman Building, 2120 L Street, NW., Washington, DC 20555, and at the Local Public Document Room, Salem Free Pubic Library, 112 West Broadway, Salem, New Jersey, 08079.

Dated at Rockville, Maryland, this 31st day of July 1990.

For the Nuclear Regulatory Commission.

Walter R. Butler,

Director, Project Directorate I–2, Division of Reactor Projects–I/II, Office of Nuclear Reactor Regulation.

[FR Doc. 90–18274 Filed 8–3–90; 8:45 am]

BILLING CODE 7590–01–M

SECURITIES AND EXCHANGE COMMISSION

[Rel. No. 34–28288; File No. SR–BSE–90–2]

Self Regulatory Organizations; Proposed Rule Change by the Boston Stock Exchange, Inc. Relating to Adoption of Listing Guidelines and Suitability Rules for Index Warrants

Pursuant to section 19(b)(1) of the Securities Exchange Act of 1934 ("Act"), 15 U.S.C. 78s(b)(1), notice is hereby given that on July 2, 1990, the Boston Stock Exchange, Incorporated ("BSE") filed with the Securities and Exchange Commission ("Commission") the proposed rule change as described in Items I, II, and III below, which Items have been prepared by the self-regulatory organization. The Commission is publishing this notice to solicit comments on the proposed rule from interested persons.

I. Self-Regulatory Organization's Statement of the Terms of Substance of the Proposed Rule Change

The BSE is proposing to amend its listing rules to provide guidelines for the listing of index warrants based on domestic and foreign stock indexes and to adopt options suitability rules which

would be applicable to transactions in index warrants.

II. Self-Regulatory Organization's Statement of the Purpose of, and Statutory Basis for, the Proposed Rule Change

In its filing with the Commission, the self-regulatory organization included statements concerning the purpose of and basis for the proposed rule change and discussed any comments it received on the proposed rule change. The text of these statements may be examined at the places specified in Item IV below. The self-regulatory organization has prepared summaries, set forth in sections (A), (B), and (C) below, of the most significant aspects of such statements.

(A) Self-Regulatory Organization's Statement of the Purpose of, and Statutory Basis for, the Proposed Rule Change

(a) The purpose of the proposed rule changes is to provide an adequate regulatory framework to enable BSE members to trade index warrants based on domestic and foreign stock indexes. A new section will be added to the listing rule which sets forth standards for the listing of index warrants generally. The proposed warrants will be cash-settled, unsecured obligations of the issuer with a term ranging from one to five years. Only index warrants based on established domestic and foreign market indexes would be accepted for listing. The BSE plans to list both American-style warrants (i.e., exercisable throughout their life) and European-style warrants (i.e., exercisable only upon their expiration date). Upon exercise, or at the warrant's expiration date if not exercisable prior to such date, the holder of a warrant resembling a put option would receive payment in U.S. dollars to the extent that the underlying index has declined below a pre-stated cash settlement value, while the holder of a warrant resembling a call option would receive payment in U.S. dollars to the extent that the index has increased above the pre-stated cash settlement value. Warrants that are "out-of-the-money" at the end of the stated term will expire worthless.

The BSE will consider listing index warrants on a case-by-case basis. Because the warrants would represent unsecured obligations of the issuer, only warrants issued by companies that exceed the financial listing criteria of the BSE and that have assets in excess of $100 million would be eligible for listing. The Exchange proposes to require a minimum public distribution of one million warrants together with a minimum of 400 public holders, and an aggregate market value of $4 million. In addition, warrants which have been approved for trading on another national securities exchange would be eligible for listing.

Options suitability rules are being adopted which will apply to recommendations to buy or sell index warrants. The suitability standard will require that the member or member organization have reasonable grounds to believe that the recommended index warrant transaction is suitable for the customer and that the customer is able to evaluate and bear the risk of the proposed transaction. The BSE will recommend that index warrants be sold only to options-approved accounts. In addition, the BSE is requiring that all index warrant transactions in discretionary accounts be approved and initialled by a Senior Registered Options Principal ("SROP") or a Registered Options Principal ("ROP") on the day it is executed. Because the BSE is not the Designated Examining Authority ("DEA") for any of its member firms that have public customers, it will cross reference the options rules of the other exchanges that are the DEA for its members that do have public customers to ensure compliance regarding approval of customer accounts for options trading.

(b) The BSE believes that the proposed rule changes are consistent with section 6(b)(5) of the Act, in that they are designed to promote just and equitable principals of trade, remove impediments to and perfect the mechanism of a free and open market and a national market system, and, in general, to protect investors and the public interest. Furthermore, they are consistent with section 11A(a)(1)(C)(ii) of the Act in that they will promote fair competition among and between exchange markets.

(B) Self-Regulatory Organization's Statement on Burden on Competition

The Exchange does not believe that the proposed rule changes will impose any burden on competition that is not necessary or appropriate for the protection of investors or the public interest.

(c) Self-Regulatory Organization's Statement on Comments on the Proposed Rule Change Received From Members, Participants, or Others

The Exchange has neither solicited nor received comments on the proposed rule changes.

III. Date of Effectiveness of the Proposed Rule Change and Timing for Commission Action

Within 35 days of the date of publication of this notice in the Federal Register or within such longer period: (i) As the Commission may designate up to 90 days of such date if it finds such longer period to be appropriate and publishes its reasons for so finding or (ii) as to which the self-regulatory organization consents, the Commission will:

(A) By order approve such proposed change, or

(B) Institute proceedings to determine whether the proposed rule change should be disapproved.

IV. Solicitation of Comments

Interested persons are invited to submit written data, views and arguments concerning the foregoing. Persons making written submissions should file six copies thereof with the Secretary, Securities and Exchange Commission, 450 Fifth Street NW., Washington, DC 20549. Copies of the submission, all subsequent amendments, all written statements with respect to the proposed rule change that are filed with the Commission, and all written communications relating to the proposed rule change between the Commission and any person, other than those that may be withheld from the public in accordance with the provisions of 5 U.S.C. 552, will be available for inspection and copying in the Commission's Public Reference Section, 450 Fifth Street NW., Washington, DC 20549. Copies of such filing will also be available for inspection and copying at the principal office of the above-mentioned self-regulatory organization. All submissions should refer to the file number in the caption above and should be submitted by August 27, 1990.

For the Commission, by the Division of Market Regulation, pursuant to delegated authority.[1]

Dated: July 30, 1990.

Jonathan G. Katz,

Secretary.

[FR Doc. 90-18293 Filed 8-3-90; 8:45 am]

BILLING CODE 8010-01-M

[1] 17 CFR 200.30-3(a)(12) (1989).

[Rel. No. 34-28284; File No. SR-NSCC-90-12]

Self-Regulatory Organizations; Proposed Rule Change by the National Securities Clearing Corporation Relating to an Amendment to Its Rules Providing for Limited Liability for Distribution to Members and Others of Information Received By or Extracted From Participants and Others

Pursuant to section 19(b)(1) of the Securities Exchange Act of 1934 ("Act"), 15 U.S.C. 78s(b)(1), notice is hereby given that on June 29, 1990, the National Securities Clearing Corporation ("NSCC") filed with the Securities and Exchange Commission ("Commission") the proposed rule change as described in Items I, II, and III below, which Items have been prepared by NSCC. The Commission is publishing this notice to solicit comments on the proposed rule change from interested persons.

I. Self-Regulatory Organization's Statement of the Terms of Substance of the Proposed Rule Change

The proposed rule change amends NSCC's Rules by adding a new rule 25 that limits NSCC's liability for the distribution to Members and others of information received by or extracted from participants and others. The text of the rule change is attached hereto as Exhibit "A".

II. Self-Regulatory Organization's Statement of the Purpose of, and Statutory Basis for, the Proposed Rule Change

In its filing with the Commission, NSCC included statements concerning the purpose of, and statutory basis for, the proposed rule change and discussed any comments it received on the proposed rule change. The text of these statements may be examined at the places specified in Item IV below. NSCC has prepared summaries, set forth in sections (A), (B), and (C) below, of the most significant aspects of such statements.

A. Self-Regulatory Organization's Statement of the Purpose of, and Statutory Basis for, the Proposed Rule Change

The purpose of the proposed rule change is to clearly delineate NSCC's liability for the distribution of information which is received or extracted from participants and others. NSCC currently provides comparison services for Baskets and Mini-Baskets ("Baskets"). In order to perform such services, NSCC receives information regarding the composition of the Baskets. NSCC provides Members with basket composition data upon request. Since NSCC is merely transmitting to Members information received from others, NSCC wants to clarify that it has no liability for the distribution of such information except for losses due to the gross negligence or willful act of NSCC. This rule will also apply to the distribution of any other information by NSCC to Members and others, which information is received or extracted from participants and others.

Since the proposed rule change does not adversely affect the safeguarding of securities and funds in NSCC's custody or control, NSCC believes that the proposal is consistent with the requirements of section 17A of the Act and the rules and regulations thereunder applicable to NSCC.

B. Self-Regulatory Organization's Statement on Burden on Competition

NSCC does not believe that the proposed rule will have an impact or impose a burden on competition.

C. Self-Regulatory Organization's Statement on Comments on the Proposed Rule Change Received From Members, Participants, or Others

No written comments have been solicited or received. NSCC will notify the Commission of any written comments received.

III. Date of Effectiveness of the Proposed Rule Change and Timing for Commission Action

Within 35 days of the date of publication of this notice in the **Federal Register** or within such longer period (i) As the Commission may designate up to 90 days of such date if it finds such longer period to be appropriate and publishes its reasons for so finding or (ii) as to which the self-regulatory organization consents, the Commission will:

(A) By order approve such proposed rule change, or

(B) Institute proceedings to determine whether the proposed rule change should be disapproved.

IV. Solicitation of Comments

Interested persons are invited to submit written data, views and arguments concerning the foregoing. Persons making written submissions should file six copies thereof with the Secretary, Securities and Exchange Commission, 450 Fifth Street NW., Washington, DC 20549. Copies of the submissions, all subsequent amendments, all written statements with respect to the proposed rule change that are filed with the Commission, and all written communications relating to the proposed rule change between the Commission and any person, other than those that may be withheld from the public in accordance with the provisions of 5 U.S.C. 552, will be available for inspection and copying in the Commission's Public Reference Section, 450 Fifth Street NW., Washington, DC 20549. Copies of such filing will also be available for inspection and copying at the principal office of the above-mentioned self-regulatory organization. All submissions should refer to SR-NSCC-90-12 and should be submitted by August 27, 1990.

For the Commission, by the Division of Market Regulation, pursuant to delegated authority.

Dated: July 30, 1990.

Jonathan G. Katz,

Secretary.

Exhibit A

Text of Proposed Rule Change

(a) Amend National Securities Clearing Corporation's ("NSCC") Rules by adding a new rule 25 (Italics indicate additions):

Distribution of Information Received or Extracted From Others

Rule 25. Sec. 1. The Corporation may determine to distribute to participants and others information, including but not limited to reports, portfolios or files, which the Corporation is provided by, receives or extracts from, participants and others; provided, however, that such information shall be in a form as to prevent the disclosure, whether patently or in easily discernible format, of proprietary and/or confidential financial, operational or trading data of a particular participant or inappropriately arranged groups of participants.

Sec. 2. Notwithstanding any other provision of these Rules to the contrary, the Corporation does not guarantee the timeliness, accuracy or completeness of such information. The Corporation shall have no responsibility or liability to any person for

(i) any inaccuracies or errors in, or omissions of, any such information;

(ii) any delays or errors in the transmission or delivery of any part of any such information; or

(iii) any losses or damages arising from or occasioned by any such inaccuracies, errors, omissions or delays or by reason of non-performance or of interruption in the dissemination of any such information,

regardless of the cause, including but not limited to any cause beyond the reasonable control of the Corporation,

act of God, flood, extraordinary weather conditions, fire, war, insurrection, riot, strike, accident, action of government, communications or power failure, or equipment or software malfunction, except losses or damages resulting from the gross negligence or willful misconduct of the Corporation.

(b) Not applicable.

(c) Not applicable.

[FR Doc. 90-18295 Filed 8-3-90; 8:45 am]
BILLING CODE 8010-01-M

[Release No. 34-28287; File No. SR-CSE-90-10]

Self-Regulatory Organizations; Filing of Proposed Rule Changes by the Cincinnati Stock Exchange, Inc. Relating to Index Warrants

Pursuant to section 19(b)(1) of the Securities Exchange Act of 1934 ("Act") 15 U.S.C. 78s(b)1, notice is hereby given that on May 22, 1990 the Cincinnati Stock Exchange, Inc. ("CSE" or "Exchange") filed with the Securities and Exchange Commission ("Commission") the proposed rule changes as described in Items I, II and III below, which Items have been prepared by the self-regulatory organization.[1] The Commission is publishing this notice to solicit comments on the proposed rule change from interested persons.

I. Self-Regulatory Organization's Statement of the Terms of Substance of the Proposed Rule Change

The CSE is proposing to: (1) Adopt section 1.3(5) of Article IV of th CSE's rules to provide listing standards applicable to index warrants based on both domestic and foreign market indexes; (2) amend rule 3.7 to make the option suitability standard applicable to recommendations regarding index warrants; (3) amend rule 3.16 to require that discretionary orders in index warrants be approved and initialled on the day entered by a Senior Registered Options Principal or a Registered Options Principal; and (4) adopt Interpretation and Policy .01 to section 1 of Article IV to permit the trading of index warrants based on the Nikkei Stock Average pursuant to listing or unlisted trading privileges.[2] The text of the proposed rule change may be examined at the places specified in Item IV below.

II. Self-Regulatory Organization's Statement of the Purpose of, and Statutory Basis for, the Proposed Rule Change

In its filing with the Commission, the self-regulatory organization included statements concerning the purpose of, and basis for, the proposed rule change and discussed any comments it received on the proposed rule change. The text of these statements may be examined at the places specified in Item IV below. The self-regulatory organization has prepared summaries, set forth in sections (A), (B), and (C) below, of the most significant aspects of such statements.

A. Self-Regulatory Organization's Statement of the Purpose of, and Statutory Basis for, the Proposed Rule Change

(1) Purpose

The Exchange is proposing to amend its rules to establish a regulatory framework that permits the listing of index warrants generally as well as index warrants specifically based on the Nikkei Stock Average. The proposed index warrants will be unsecured obligations of an issuer, subject to cash settlement in United States dollars during a term of at least one year from date of issuance. Only index warrants based on established, market indexes, both foreign and domestic, will be accepted for listing.

Index warrants would be eligible for listing whether exercisable throughout their life (i.e., American style) or exercisable only on their expiration date (i.e., European style). Upon exercise, or at the index warrant expiration date (if not exercisable prior to such date), the holder of an index warrant structured as a "put" would receive payment in United States dollars to the extent that the index has declined below a prestated cash settlement value. Conversely, holders of an index warrant structured as a "call" would, upon exercise or at expiration, receive payment in United States dollars to the extent that the index has increased above the pre-stated cash settlement value. If "out-of-the-money" at the time of expiration, the index warrants would expire worthless.

Since the index warrants would represent unsecured obligations of the issuer, only index warrants issued by companies that have assets in excess of $100 million and otherwise substantially exceed the size and earnings requirements for listing on the CSE would be eligible for listing on the CSE. The CSE also proposes to require a minimum public distribution of 1,000,000 index warrants together with a minimum of 400 public holders, and an aggregate market value of $4,000,000. The Exchange proposes that these requirements will be applied to index warrants solely listed on the CSE or upon which unlisted trading privileges have been granted.

The CSE also proposes to require that recommendations to buy or sell index warrants be subject to the options suitability standard. The CSE also proposes to recommend that index warrants be sold only to options-approved accounts.

The Exchange also proposes to amend CSE rule 3.16 to require that Senior Registered Options Principals or Registered Options Principals approve and initial a discretionary order for an index warrant on the day the order is entered.

The Exchange proposes to distribute a circular to its membership highlighting specific rules associated with index warrants based on the Nikkei Stock Average, whether the index warrant is listed on the CSE or available for unlisted trading privileges. The circular given to the members will specifically call attention to the need to provide adequate disclosure regarding the risks involved in an index warrant investment and will specify the suitability standards under CSE rule 3.7.

The CSE also is undertaking to establish an appropriate means for surveillance sharing with respect to the Nikkei Stock Average component stocks.

(2) Statutory Basis

The Exchange believes that the proposed rule change is consistent with sections 6(b)(5) and 11A of the Act in that it among other things, designed to promote just and equitable principles of trade, remove impediments to a free and open national market system and protect investors and the public interest, as well as assure fair competition in the national market system.

B. Self-Regulatory Organization's Statement of Burden on Competition

The CSE does not believe that any burdens will be placed on competition as a result of the proposed rule change.

---

[1] The CSE amended its proposal to clarify its proposed listing provisions and the content of circulars to its membership regarding index warrants. *See* letter from Craig R. Carberry, Vice President, Market Regulation, CSE, to Thomas Gira, Branch Chief, Division of Market Regulation, dated June 11, 1990.

[2] The Nikkei Index is an internationally recognized, price-weighted index comprised of 225 actively-traded stocks on the Tokyo Stock Exchange. The Nikkei Index is calculated and managed by Nihon Keizai Shimbun, Inc. of Japan.

C. Self-Regulatory Organization's Statement on Comments on the Proposed Rule Change Received from Members, Participants, or Others

No written comments were either solicited or received.

III. Date of Effectiveness of the Proposed Rule Change and Timing for Commission Action

Within 35 days of the date of publication of this notice in the **Federal Register** or within such longer period (i) As the Commission may designate up to 90 days of such date if it finds such longer period to be appropriate and publishes its reasons for so finding or (ii) as to which the self-regulatory organization consents, the Commission will:

(a) By order approve such proposed rule change, or

(b) Institute proceedings to determine whether the proposed rule change should be disapproved.

IV. Solicitation of Comments

Interested persons are invited to submit written data, views and arguments concerning the foregoing. Persons making written submissions should file six copies thereof with the Secretary, Securities and Exchange Commission, 450 Fifth Street, NW., Washington, DC 20549. Copies of the submission, all subsequent amendments, all written statements with respect to the proposed rule change that are filed with the Commission, and all written communications relating to the proposed rule change between the Commission and any person, other than those that may be withheld from the public in accordance with the provisions of 5 U.S.C. 552, will be available for inspection and copying in the Commission's Public Reference Section, 450 Fifth Street, NW., Washington, DC. Copies of such filing will also be available for inspection and copying at the principal office of the above-mentioned self-regulatory organization. All submissions should refer to the file number in the caption above and should be submitted by August 27, 1990.

For the Commission, by the Division of Market Regulation, pursuant to delegated authority.[3]

Dated: July 30, 1990.

Jonathan G. Katz,

Secretary.

[FR Doc. 90-18294 Filed 8-3-90; 8:45 am]

BILLING CODE 8010-01-M

[3] 17 CFR 200.30-3(a)(12) (1989).

[Rel. No. 34-28289; File No. SR-NASD-90-36)

Self-Regulatory Organizations; Proposed Rule Change by National Association of Securities Dealers, Inc. Relating to NASD By-Laws

Pursuant to section 19(b)(1) of the Securities Exchange Act of 1934 ("Act"), 15 U.S.C. 78s(b)(1), notice is hereby given that on July 2, 1990, the National Association of Securities Dealers, Inc. ("NASD" or "Association") filed with the Securities and Exchange Commission ("Commission" or "SEC") the proposed rule change as described in Items I, II, and III below, which Items have been prepared by the NASD. Subsequently, two amendments were filed: one dated July 10, 1990 that set forth the result of the member vote and a second, dated July 20, 1990 that amends the description of the comment letters. The Commission is publishing this notice to solicit comments on the proposed rule change from interested persons.

I. Self-Regulatory Organization's Statement of the Terms of Substance of the Proposed Rule Change

Pursuant to the provisions of section 19(b)(1) of the Act, the NASD is herewith filing a proposed rule change to Article I, VII, VIII, IX, X, XI and XIV and Schedule B of the NASD By-Laws. Below is the text of the proposed rule change. Proposed new language is italicized; proposed deletions are in brackets.

Proposed Amendments to the By-Laws

Article I

Definitions

When used in these By-Laws, and any rules of the Corporation, unless the context otherwise requires, the term:

* * * * *

(r) "Board" means the Board of Governors of the Corporation.

(s) "Governor" means a member of the Board.

Article VII

Board of Governors

* * * * *

Composition of Board

Sec. 4 (a) The management and administration of the affairs of the Corporation shall be vested in a Board of Governors composed of *from twenty-five to twenty-nine Governors* [thirty-one members], *as determined from time to time by the Board. The Board shall consist of: (i) at least thirteen but not more than fifteen Governors* [twenty-one] to be elected by the members of the various districts in accordance with the provisions of subsection[s] (b) [(1) through (5)] hereof;[,] *at least eleven but not more than thirteen Governors* [nine] to be elected by the Board [of Governors] in accordance with the provisions of subsection[s] *(c)* [(b) (6), (7) and (8)] hereof;[,] and *(iii)* the President of the Corporation to be selected by the Board [of Governors] in accordance with the provisions of Article X, section 2 of the By-Laws. *The Board, in exercising its power to determine its size and composition under this subsection (a), shall be required to select its members in a manner such that when all vacancies, if any, are filled, the number of Governors elected by the members of the various districts in accordance with subsection (b) hereof shall exceed the number of Governors (including the President) not so elected.*

(b) The several districts shall be represented on the Board [of Governors]. *Each district shall elect at least one Governor. The Board shall determine from time to time which districts, if any, shall elect more than one Governor, so as to provide fair representation of the Corporation's members and of its various districts on the Board. The determination of which districts shall elect more than one Governor need not be submitted to the membership for approval and shall become effective at such time as the Board may prescribe.* [The elected members of the Board of Governors shall be chosen as follows:] *The Board shall, from time to time, consider the fairness of the representation of members and of the various districts on the Board. Whenever the Board finds any unfairness in such representation to exist, it shall make appropriate changes in the number of boundaries of the districts or the number of Governors elected by each district to provide fair representation of members and districts.*

[(1) Three members of the Board of Governors shall be elected from and by the members of the Corporation eligible to vote in District No. 2;

(2) Two members of the Board of Governors shall be elected from and by the members of the Corporation eligible to vote in District No. 8;

(3) Five members of the Board of Governors shall be elected from and by the members of the Corporation eligible to vote in District No. 12;

(4) Two members of the Board of Governors shall be elected from and by the members of the Corporation eligible to vote in District No. 13;

(5) One member of the Board of Governors shall be elected from and by the members of the Corporation eligible to vote in each of the remaining districts not referred to in subsections (1), (2), (3) and (4) of this Section;]

(c) The Board shall elect (i) at least three Governors representative of investors, none of whom are associated with a member or any broker or dealer; (ii) At least three Governors representative of issuers, at least one of whom is not associated with a member or any broker or dealer; (iii) at least three Governors chosen from members; (iv) at least one Governor representative of the principle underwriters of investment company shares or affiliated members; and (v) at least one Governor representative of insurance companies or insurance company affiliated members.

[(6) One member of the Board of Governors shall be elected by the Board of Governors from among the principal underwriter members of investment company shares, and he shall be designated a Governor-at-Large;

(7) One member of the Board of Governors shall be elected by the Board of Governors from among insurance company members or insurance company affiliated members of the Corporation and he shall be designated a Governor-at-Large;

(8) Seven members of the Board of Governors shall be elected by the Board of Governors and they shall be designated Governors-at-Large. Any Governor-at-Large initially filling a Governor-at-Large office shall be elected at such time as the Board of Governors in its discretion deems appropriate;

(9) At least one member of the Board of Governors shall be representative of issuers and not be associated with a member, broker or dealer and at least one member of the Board of Governors shall be representative of investors and not be associated with a member, broker or dealer;

(10) The Board of Governors shall, from time to time, consider the fairness of the representation of the various districts on the Board of Governors, and whenever it finds any unfairness in such representation to exist, it shall recommend appropriate changes in these By-Laws to assure fair representation of all districts.]

Term of Office of Governors

Sec. 5. Each [elected] *Governor* [member of the Board of Governors, including the Governors-at-Large], except as otherwise [herein] provided *by these By-Laws or the Certificate of Incorporation,* shall hold office for a term of three years, and until his successor is elected and qualified, or until his death, resignation or removal. The President of the Corporation shall serve as a member of the Board [of Governors] until his successor is selected and qualified, or until his death, resignation or removal.

Succession to Office

Sec. 6. (*a*) The office of a retiring *Governor* [member of the Board of Governors] elected under subsection[s (1) through (5)] (*b*) of section *4* [3(b)] of this Article shall be filled by the election of a *Governor* [member] from the same district as that of the retiring *Governor* [member]. The office of a retiring Governor [-at-Large] *elected under subsection (c) of section 4 of this Article* shall be filled by election by the Board [of Governors] as provided in subsection[s] (*c*) [(6), (7) and/or (8)] of section *4* [3(b)] of th*is*[e] Article[, as the case may be].

(b) Notwithstanding subsection (a) of this section 6, the Board shall prescribe the succession of office in cases affected by a change in the number of Governors constituting the Board, the composition of the Board, the number or boundaries of districts, or the number of Governors elected by a district.

Election of Board Members

Sec. 7. The [elected members of the Board of] Governors *elected under subsection (b) of section 4 of this Article* shall be chosen as follows:

* * * * *

Transitional Procedures

(d) Notwithstanding subsections (a), (b) and (c) of this section 7, the Board shall prescribe the nomination and election procedures in cases affected by a change in the number of Governors constituting the Board, the composition of the Board, the number or boundaries of districts, or the number of Governors elected by a district.

Filling of Vacancies on Board

Sec. 8. All vacancies in the Board [of Governors] other than those caused[s] by the expiration of a Governor's term of office, shall be filled as follows:

(a) If the unexpired term of a Governor elected under subsection[s] (b) [(1) through (b)(3)] of section *4* [3] of this Article[,] is for less than twelve months, such vacancy shall be filled by appointment by the District *Nominating* Committee of a representative of a member of the Corporation eligible to vote in the same district.

(b) If the unexpired term of a Governor[,] elected under subsection[s] (b) [(1) through (b)(5)] of section *4* [3] of this Article[,] is for twelve months or more, such vacancy shall be filled by election, which shall be conducted as nearly as practicable in accordance with the provisions of section *7* [6] of this Article.

(c) If the unexpired term is that of a Governor [-at-Large] *elected by the Board,* such vacancy shall be filled in accordance with the provisions of subsections *(c)(i) through (c)(v)* [(b)(6), (b)(7), and/or (b)(8)] of section *4* [3] of this Article as the case may be.

Article VIII

District Committees

Administrative Districts

Sec. 1. For the purpose of administration, the United States is hereby divided into districts, the boundaries of which shall be established by the Board [of Governors]. The Board [of Governors] may from time to time make such changes in the *number or* boundaries *of such districts* as it deems necessary or appropriate. Neither the establishment nor any change in the *number or* boundaries *of such districts* need be submitted to the membership for approval, and the *number or* boundaries, as established or changed, shall become effective at such time as the Board [of Governors] may prescribe. *The Board shall prescribe such policies and procedures as are necessary or appropriate to address the implementation of a new district configuration in the event of a change in the number or boundaries of the districts.*

District Committees and District Business Conduct Committees

Sec. 2. (a) For the purpose of effectuating a maximum degree of local administration of the affairs of the Corporation, each of the districts created under section 1 of this Article shall elect a District Committee, as hereinafter provided. Each such District Committee shall determine the number of its members so to be elected, but [in] no [event shall any] District Committee *shall* consist of more than twelve members[;] *unless otherwise* provided[,] [however, that] *by resolution of* the Board. [of Governors by resolution may increase, upon request, any such District Committee to a larger number.]

* * * * *

Transitional Provisions

Sec. 12. The Board, by resolution amending or supplementing the provisions of this Article and Article IX, shall have the authority to establish the policies and procedures applicable to

District Committees affected by a change in the number or boundaries of the districts, including, without limitation, prescribing the procedures for nomination and election of District Committee members.

Article IX

Nominating Committees

Composition of Nominating Committees

Sec. 1(a) Each of the Districts created under section 1 of Article VIII of the By-Laws shall elect a Nominating Committee, as provided in section 3 of this Article. Each such Nominating Committee shall consist of five members; provided, however, that the Board [of Governors] by resolution may increase any such Nominating Committee to a larger number. Members of the Nominating Committee in each District shall be members of the Corporation having places of business in the respective District, but shall not be members of the District Committee. All Nominating Committees shall include a majority of persons who have previously served on *a* [the] District Committee [and/] or *who are current or former* [on the Board of] Governors, and shall [, insofar as practicable,] include at least one *current or* former [member of the Board of] Governor[s].

* * * * *

Transitional Provisions

Sec. 7. The Board, by resolution amending or supplementing the provisions of this Article and Article VIII, shall have the authority to establish the policies and procedures applicable to District Nominating Committees affected by a change in the number or boundaries of the districts, including, without limitation, prescribing the procedures for nomination and election of District Nominating Committee members.

Article X

Officers and Employees

* * * * *

[Restrictions on] Compensation of Board and Committee Members

Sec. 6. [No member of] The Board [of Governors (except the President of the Corporation or the President pro tem), no member of [+] any District Committee and no member of any other Committee, other than an Extended Hearing Committee as defined in Article I of the Corporation's Code of Procedure shall be entitled to] *may provide for reasonable* [received any] compensation *of the Chairman of the Board, Governors, and the members of any committee of the Board or any District Committee* from the Corporation, [for any work done in connection with his duties as a member of the Board of Governors, any District Committee or any other committee. However, such persons shall be entitled to] *The Board may also provide for* reimbursement *of* [for] reasonable expenses incurred *by such persons* in connection with the business of the Corporation.

Article XI

Committees

National [Standing] Committees

Sec. 1. The Board [of Governors] may appoint such [standing and other] committees *or subcommittees* as it deems necessary or desirable, and it shall fix their powers, duties and terms of office. *Any such committee or subcommittee consisting of one or more Governors, to the extent provided by these By-Laws or by resolution of the Board, shall have and may exercise all powers and authority of the Board in the management of the business and affairs of the Corporation.*

[District Standing] Committees of the Districts

Sec. 2. Each District Committee, in the exercise of its powers and performance of its duties as provided in the By-Laws, may, except as otherwise herein provided, appoint such [standing or other] committees or subcommittees as it deems necessary or desirable, and shall fix their powers, duties and terms of office.

Removal of Committee Member

Sec. 3. Any member of any committee *or subcommittee* appointed pursuant to [sections 1 or 2 of] this Article *XI* may be removed from office, after appropriate notice from the District Committee appointing such member, or from the Board [of Governors], if it is the appointing authority, for refusal, failure, neglect or inability to discharge his duties, or for any cause the sufficiency of which shall be decided by the District Committee or the Board [of Governors], whichever is the appointing authority.

Article XIV

Powers of Board to Prescribe Sanctions

The Board [of Governors] is hereby authorized to prescribe appropriate sanctions applicable to members, incuding censure, fine, suspension or expulsion from membership, suspension or barring from being associated with all members, limitation of activities, functions and operations of a member, or any other fitting sanction, and to prescribe appropriate sanctions applicable to persons associated with members, including censure, fine, suspension or barring a person associated with a member from being associated with all members, limitation of activities, function and operations of a person associated with a member, or any other fitting sanction, for:

* * * * *

(d) refusal by a member or person associated with a member to abide by an official ruling of the Board [of Governors] or *any committee* [Uniform Practice Committee acting within its appropriate authority] *exercising powers assigned* [delegated] *by the Board* with respect to any transaction which is subject to the Uniform Practice Code; or

(e) failure by a member or a person associated with a member to adhere to any ruling, order, direction or decision of, or to pay any penalty, fine or costs, imposed by, the Board [of Governors], *the National Business Conduct Committee, the Market Surveillance Committee, any other committee exercising powers assigned* [delegated] *by the Board* or any District Business Conduct Committee.

Proposed Amendments to Schedule B of the By-Laws

Schedule B

The number and t[T]erritorial boundaries of the several districts established as provided in Section 1 of Article VIII *and the number of Governors elected from the several districts established as provided in section 4(b) of Article VII* of the By-Laws of the Corporation[,] are as follows:

District No. 1—State of Hawaii; in the State of California, the Counties of Monterey, San Benito, Fresno and Inyo, and the remainder of the State North or West of such Counties; and in the State of Nevada, the Counties of Esmeralda and Nye, and the remainder of the State North or West of such Counties. [States of Alaska, Idaho, Montana, Oregon and Washington.] *One Governor shall be elected from and by the members of the Corporation eligible to vote in District No. 1.*

District No. 2—In the State of California, that part of the State South or East of the Counties of Monterey, San Benito, Fresno and Inyo; and, in the State of Nevada, that part of the State South or East of the Counties of Esmeralda and Nye. [States of California, Nevada and Hawaii.] *One Governor shall be elected from and by the members of the Corporation eligible to vote in District No. 2.*

District No. 3—States of *Alaska,* Arizona, Colorado, *Idaho, Montana,* New Mexico, *Oregon,* Utah, *Washington* and Wyoming. *One Governor shall be elected from and by the members of the Corporation eligible to vote in District No. 3.*

District No. 4—States of *Iowa,* Kansas, *Minnesota,* Missouri, Nebraska, *North Dakota* and *South Dakota* [Oklahoma]. *One Governor shall be elected from and by the members of the Corporation eligible to vote in District No. 4.*

District No. 5—States of Alabama, Arkansas, *Kentucky,* Louisiana, Mississippi, *Oklahoma* and [in the State of] Tennessee[, the Counties of Montgomery, Dickson, Hickman, Lewis and Lawrence and the remainder of the State lying West of such Counties]. *One Governor shall be elected from and by the members of the Corporation eligible to vote in District No. 5.*

District No. 6—State of Texas. *One Governor shall be elected from and by the members of the Corporation eligible to vote in District No. 6.*

District No. 7—States of Florida, Georgia, *North Carolina, and* South Carolina [, and, in the State of Tennessee, the Counties of Robertson, Cheatham, Williamson, Maury and Giles and the remainder of the State lying East of such Counties,]: Puerto Rico, Canal Zone and the Virgin Islands. *Two Governors shall be elected from and by the Members of the Corporation eligible to vote in District No. 7.*

District No. 8—States of Illinois, Indiana, [Iowa,] Michigan, [Minnesota,] [North Dakota] *Ohio* [South Dakota] and Wisconsin, *and, in the State of New York, the Counties of Monroe, Livingston and Steuben, and the remainder of the State West of such Counties. Two Governors shall be elected from and by the members of the Corporation eligible to vote in District No. 8.*

District No. 9—The District of Columbia, and the States of Delaware, Maryland, Pennsyulvania, Virginia and West Virginia, and, in the State of New Jersey, the Counties of Atlantic, Burlington, Camden, Cape May, Cumberland, Gloucester, Mercer, Ocean and Salem [States of Kentucky and Ohio]. *One Governor shall be elected from and by the members of the Corporation eligible to vote in District No. 9.*

District No. 10—In the State of New York, the Counties of Nassau, Orange, Putnam, Rockland, Suffolk, Westchester, and the five Boroughs of New York City, and the State of New Jersey (except for the Counties of Atlantic, Burlington, Camden Cape May, Cumberland, Gloucester, Mercer, Ocean and Salem) [The District of Columbia and the State of Maryland, North Carolina and Virginia]. *Three Governors shall be elected from and by the members of the Corporation eligible to vote in District No. 10.*

District No. 11—[The] States of *Connecticut, Maine, Massachusetts, New Hampshire, Rhode Island, Vermont and New York (except for the Counties of Nassau, Orange, Putnam, Rockland, Suffolk, and Westchester; the Counties of Monroe, Livingston and Steuben, and the remainder of the State West of such Counties: and the five Boroughs of New York City)* [Delaware, Pennsylvania, West Virginia and New Jersey, except for the Counties of Bergen, Essex, Hudson, Passaic and Union]. *One Governor shall bve elected from and by the member of the Corporation eligible to vote in District No. 11.*

District No. 12—In the State of New York, the Counties of Nassau, Orange, Putnam, Rockland, Suffolk, Westchester, and the five Boroughs of New York City, and, in the State of New Jersey, the Counties of Bergen, Essex, Hudson, Passaic and Union.]

District No. 13—States of Connecticut, Maine, Massachusetts, New Hampshire, Rhode Island, Vermont and New York, with the exception of the Counties of Nassau, Orange, Putnam, Rockland, Suffolk. Westchester, and the five Boroughs of New York City.]

II. Self-Regulatory Organization's Statement of the Purpose of, and Statutory Basis for, the Proposed Rule Change

In its filing with the Commission, the NASD included statements concerning the purpose of and basis for the proposed rule change and discussed any comments it received on the proposed rule change. The text of these statements may be examined at the places specified in Item IV below. The NASD has prepared summaries, set forth in Sections (A), (B), and (C) below, of the most significant aspects of such statements.

A. Self-Regulatory Organization's Statement of the Purpose of, and Statutory Basis for, the Proposed Rule Change

The proposed rule change amends Articles I, VII, VIII, IX, X, XI, XIV and Schedule B of the NASD By-Laws that address the size and composition of the Board and the number and configuration of the NASD districts. These amendments result from an intensive study conducted by the NASD's Special Committee on NASD Structure and Governance ("Special Committee"). The amendments are designed to ensure that the NASD's governance process fairly represents the increased diversity of the securities industry and continues to command the respect and confidence of investors, issuers, and our members.

The Board of Governors

Article VII, section 4(a) of the NASD By-Laws currently provides for a Board of 31 Governors. The NASD is proposing to change this section of Article VII to give the Board the authority to adjust its size between 25 and 29 Governors. The Board determined that its size should be reduced to enhance the participation of individual Governors in its deliberations and the overall efficiency of the Board; but, that the Board be no smaller than 25 Governors, since it must represent a variety of interests and experience and since much of its work is assisted by a large number of committees on which Governor service is highly desirable. The Board has resolved to reduce its size over the next two years to 29 Governors upon approval of the proposed rule change.

Under current Article VII, section 4 of the NASD By-Laws, the Board is composed of 23 Governors elected from the district; 9 Governors elected by the Board from the securities industry, issuers and the public; and the President. The Board is proposing that a greater proportion of Governors be elected by the Board based on:

- The need to fairly and effectively represent the many types of participants in the securities industry;[1]
- The need for to recruit candidates with a broad range of backgrounds and with specialized expertise in the international, technology and other diverse issues that must be addressed effectively by the Board to fulfill the mission of the NASD;
- The desire to improve the NASD's ability to recruit candidates who may be able to make significant contributions to the Board and to the NASD's mission, but who are unable to commit the time required for service at both the Board and district level;
- The need domestic and overseas issuer representation in the heightened competitive environment in which the NASDAQ® market operates;
- The need for substantial public representation on the Board; and
- The practical limitations on the size of the Board.

[1] This would include representation of banks, pension funds, and other institutions (both domestic and international), specialty or limited-purpose broker-dealers, and continued representation of insurance companies and underwriters of investment company shares.

The proposed rule change to Article VII, section 4 would decrease the number of Governors elected from the districts. It has been crafted, however, to ensure that the decrease in the number of Governors from the districts would not jeopardize fair representation of local and regional firms—which both distinguishes the NASD from other self-regulatory organizations and is necessary for effective nationwide regulation and enforcement. First, under proposed language to section 4(b), each district will be represented on the Board by at least one Governor. Second, under proposed language to section 4(a), the total number of Governors elected from the districts shall constitute an absolute majority of the Board.[2]

The proposed rule change would also amend Article VII, section 4 to increase public representation on the Board. Article VII, section 4(b)(9) currently provides that the Board shall elect at least one Governor representative of investors and at least one Governor representative of issuers. The proposed rule change would amend Article, VII, section 4 by adding subsection (c) that would require that the Board elect at least three Governors representative of investors, none of whom are associated with a member or any broker or dealer, and at least three Governors representative of issuers, at least one of whom is not associated with any member or broker or dealer. These changes are consistent with section 15A(b)(4) of the Exchange Act which requires "that one or more directors shall be representative of issuers investors and not be associated with a member of the association, broker, or dealer."

The NASD is also proposing under section 4(c) of Article VII that the Board elect at least three Governors representative of members. These three Governors can be elected from any sector of the securities industry. This is currently not required under Section 4 of Article VII.

The proposed rule change provides for continued representation on the Board of the insurance and investment company sectors of the securities industry. Currently, Article VII, section (4)(b)(7) provides that one Governor elected by the Board shall be representative of the insurance sector and one Governor shall be representative of the investment company sector of the securities industry. Under proposed section (4)(c)(v) of Article VII, this requirement would be retained, but the applicable provisions would be expanded to ensure that representatives of these sectors who are associated with affiliates of members can serve as Governors in appropriate cases.

The NASD proposes to amend Article X, section 6 of the By-Laws to give the Board the authority to provide for compensation of Governors, the Chairman of the Board and members of any committee of the Board of any District Committee. The Board considered the issue of compensation and found that the lack of compensation has not to date adversely affected the recruitment of highly qualified candidates for service as Chairman or on the Board or its committees. Consequently, the Board does not envision providing compensation at this time. The Board did decide, however, that it should be given the flexibility to provide for such compensation in the event the Board finds it necessary to ensure the successful recruitment of highly qualified candidates for service as Chairman or on the Board or its committees. Proposed language to Article X, section 6 provides this flexibility.

Districts

The NASD's district structure, and its role in the selection of Governors, is an essential element of the governance of the NASD that distinguishes the NASD from other self-regulatory organizations in the securities industry. The Board determined that changes to the existing district structure, consistent with fair and effective district representation on the Board, are necessary to address significant demographic shifts in the NASD's membership as well as the proposed revisions to the composition of the Board discussed above.

The proposed rule change would amend Article VII, section 1 to clarify that the Board has the authority to change the number of districts in addition to changing the borders of districts. Article VII, section 4(b) is proposed to be amended to provide that the Board has the authority to determine which districts shall elect more than one Governor. these two changes are designed to enhance the Board's ability to ensure fair representation of members.

The Board has adopted, subject to member and SEC approval of the proposed rule change, specific changes to the district. The need for these changes in the districts is illustrated by a comparison of District 9 (Cleveland) and District 7 (Atlanta). Today, each district is represented by one Governor, although District 9 has 166 members and employs 16 staff members, while District 7 has 547 members and a staff of 48. The changes would yield somewhat fewer, but larger districts which will provide fair representation of members, a large pool of candidates from which to elect District Committee and Board members, and improve the NASD's ability to administer and supervise the districts.

Specifically, the Board has determined that the number of districts should be reduced from 13 to 11. These 11 districts would be represented on the Board by 15 of its 29 Governors. The 11 new districts would be as follows:

- New District 1—This district would comprise the portion of existing District 2 referred to as Distict 2N. It would include Northern California (the Counties of Monterey, San Benito, Fresno and Inyo, and the remainder of the State north or west of such Counties), Northern Nevada (the Counties of Esmeralda and Nye, and the remainder of the State north or west of such Counties) and Hawaii. It would elect one Governor.
- New District 2—this district would comprise the portion of existing District 2 referred to as District 2S. It would include Southern California (that part of the State south or east of the Counties of Monterey, San Benito, Fresno and Inyo) and Southern Nevada (that part of the State south or east of the Counties of Esmeralda and Nye). It would elect the Governor.
- New District 3—this district would comprise existing Districts 1 (Seattle) and 3 (Denver). It would include Alaska, Arizona, Colorado, Idaho, Montana, New Mexico, Oregon, Utah, Washington and Wyoming. It would elect one Governor.
- New District 4—this district would comprise most of existing District 4 (Kansas City) and certain neighboring states. It would include Iowa, Kansas, Minnesota, Missouri, Nebraska, North Dakota and South Dakota. This district would elect one Governor.
- New District 5—this district would comprise most of existing District 5 (New Orleans) and certain neighboring states. It would include Alabama, Arkansas, Kentucky, Louisiana, Mississippi, Oklahoma and Tennessee. This district would elect one Governor.
- New District 6—this district would comprise existing District 6 (Dallas), consisting of Texas. It would elect one Governor.
- New District 7—this district would comprise most of existing District 7 (Atlanta) and one neighboring state. It

[2] Under the proposed rule change to section 4(a), subsections (i) and (ii), the districts would elect from 13 to 15 Governors, and the Board would elect from 11 to 13 Governors. Under section 4(a), if the Board were to elect 13 Governors, at least 14 Governors would have to be elected by the districts.

would include Florida, Georgia, North Carolina, South Carolina, Puerto Rico, the Canal Zone and the Virgin Islands. This distict would elect two Governors.

• New District 8—this district would comprise most of existing District 8 (Chicago) and 9 (Cleveland) and part of upstate New York. It would include Illinois, Indiana, Michigan, Ohio and Wisconsin, and part of upstate New York (the Counties of Monroe, Livingston and Steuben, and the remainder of the State west of such Counties). This district would elect two Governors.

• New District 9—this district would comprise most of existing Districts 10 (Washington, D.C.) and 11 (Philadelphia). It would include the District of Columbia, Delaware, Maryland, Pennsylvania, Virginia, West Virginia and Southern New Jersey (the Counties of Atlantic, Burlington, Camden Cape May, Cumberland, Gloucester, Mercer, Ocean and Salem). This district would elect one Governor.

• New District 10—this district would comprise existing District 12 (New York) and Northern New Jersey. It would include the five Boroughs of New York City and the adjacent Counties in New York (the Counties of Nassau, Orange, Putnam, Rockland, Suffolk, Westchester) and Northern New Jersey (the State of New Jersey except for the Counties of Atlantic, Burlington, Camden, Cape May, Cumberland, Gloucester, Mercer, Ocean and Salem). This district would elect three Governors.

• New District 11—this district would comprise existing District 13 (Boston), with the exception of part of upstate New York. It would include Connecticut, Maine, Massachusetts, New Hampshire, Rhode Island, Vermont and New York (except for the Counties of Nassau, Orange, Putnam, Rockland, Suffolk, and Westchester; the Counties of Monroe, Livingston and Steuben, and the remainder of the State West of such Counties; and the five Boroughs of New York City). This district would elect one Governor.

The NASD believes that these changes are consistent with the NASD's obligation under section 15A(b)(4) of the Exchange Act to ensure that "[T]he rules of the association [NASD] assure a fair representation of its members in the selection of its directors and administration of its affairs." They are also consistent with existing Article VII, section 4(b)(10) of the NASD By-Laws, which requires that the Board consider from time to time the fairness of the representation of the various districts on the Board.[3]

B. Self-Regulatory Organization's Statement on Burden on Competition

The NASD does not believe that the proposed rule change will result in any burden on competition that is not necessary or appropriate in furtherance of the purposes of the Act, as amended.

C. Self-Regulatory Organization's Statement on Comments on the Proposed Rule Change Received From Members, Participants, or Others

The proposed rule change was published for comment in Notice to Members 90–19 on April 1, 1990. Thirteen comments were received in response thereto. A copy of the Notice to Members is attached to the NASD filing as Exhibit 2. Copies of the comment letters received in response thereto are attached to the NASD filing as Exhibit 3. Of the 13 comment letters received: (1) Two were in favor (Peter Barnes and Santa Barbara Securities); (2) two were generally in favor but had comments (American Council of Life Insurance and J.P. Morgan Securities Inc.); (3) four were opposed to the elimination or reconfiguration of a specific District (Alexandra Armstrong Associates, Inc., Bancoklahoma Securities Corp., Ragen MacKenize Inc. and Rushmore Investment Brokers Inc.); (4) two were opposed to the configuration of more than one District (R.W. Corby & Company, Inc. and Share Incorporated Church Finance); and (5) three expressed general opposition to a number of proposals (Folger Nolan Fleming Douglas Inc., April 25, 1990; Folger Nolan Fleming Douglas, April 26, 1990; and Jackson & Smith Investment Securities.)

Some commentators expressed concern that the reduction in the proportion of industry Governors would reduce the level of industry expertise and experience on the Board and would make the Board less representative of the industry. The Special Committee addressed these concerns in its Report to the Board.[4] The Board concluded that the concerns relating to the decrease in the number of industry Governors were outweighed by the need for additional issuer and investor representation on the Board, and determined that sufficient industry representation would remain as at least two-thirds of the Governors will be associated with members or representative of sectors of the securities industry.

One commentator urged the Board to increase insurance industry representation on the Board in light of the increasing impact of NASD actions on the insurance industry.[5] The Board considered whether to expand the number of Governors that are required to be representative of specific sectors of the securities industry. It decided that such an approach was inconsistent with the objectives of providing the Board with increased flexibility to determine its composition and of enhancing its opportunity to elect the best candidates for Governor to the board. The proposed rule change to Article VII, section 4(c)(iii) provides that the Board shall elect at least three Governors representative of members in addition to those elected by the districts, thereby providing the flexibility to elect Governors from the various sectors of the securities industry to meet the demands on the Board.

One commentator opposed compensation for Governors. The Board considered the issue of compensation and found that the lack of compensation has not to date adversely affected the recruitment of highly qualified candidates for service as Chairman or on the Board or its committees. Consequently, the Board does not envision providing compensation at this time. The Board did determine, however, that it should have the flexibility to provide for such compensation in the event the Board finds it necessary to ensure the successful recruitment of highly qualified candidates for service as Chairman or on the Board or its committees and the proposed rule change provides that flexibility.[6]

---

[3] The amendments include a similar provision at Article VII, section 4(b).

[4] A copy of this Report was included with Notice to Members 90–19.

[5] Article VII, section 4(b)(7) provides that one member of the Board be representative of the insurance industry. The proposed rule change continues this requirement at proposed Article VII, section 4(c). This commenter also suggested that the Board establish a committee to address concerns of insurance company members. This comment is not directed to any provision of the proposed rule change. Instead, it addresses issues raised in the Report of the Special Committee relating to the NASD's committee structure. The NASD staff initiated discussions on this matter with the commentator with a veiw to active consideration of this suggestion by the Board.

[6] Compensation of members of the governing boards of self-regulatory organizations in the securities industry is not uncommon. For example, the New York Stock Exchange and the American Stock Exchange provide compensation to their directors comparable to that provided to directors of public companies.

The proposed reconfiguration of the districts drew the most comments from members. One commentator suggested that Oklahoma should be part of new District 6 (Dallas) instead of new District 5 (New Orleans). This suggestion was not accepted because it would result in a less even distribution of members among the districts. Another commentator suggested eliminating new District 5 (New Orleans) and reconfiguring new Districts 4 (Kansas City), 6 (Texas) and 8 (Chicago), including dividing new District 8 into two districts. This comment was also not accepted since it would require significant additional changes to the existing district configuration without substantially improving the fairness of district representation.

A number of commentators criticized the formation of new Districts 3 (Denver/Seattle) and 9 (Philadelphia/Washington, DC). These commentators generally expressed the concern that there would be a reduction in service to members from the district offices and a loss of the working relationships [7] that they have developed with the district office staff. The main issue raised by such comments is whether the reconfiguration of the NASD districts will result in reduction of service to members. The Board determined that the proposed reconfiguration of districts will result in a better allocation of services among members. The NASD's commitment to maintaining its current level of service to members and the public is not adversely affected by the proposed reconfiguration of districts.

Commentators also criticized the geographic size of new District 3 (Denver/Seattle) and the burdens this may impose on District Committee members. The Board decided not to change proposed new District 3 as its size is largely a result of the relatively low density of members in the area and the high density of members on the West Coast. To address the concerns regarding caseload and travel burdens on members, the District Committees in the merged districts (new Districts 3, 8 and 9) will establish subcommittees of their District Committees and the District Business Conduct Committees if necessary to improve representation at the district level and to reduce travel time for committee members. These District Committees, since they will include members of the District Committees of two or more existing District Committees, will have additional members to staff subcommittees and to address transitional issues.

[7] While the district reconfiguration may result in a member working with different NASD staff, this does not mean that the member will no longer enjoy a good working relationship with the NASD. The NASD staff at each district and at the national level is committed to maintaining good working relationships with its members. The Board did not believe that a change in the NASD personnel working with a particular member would be prejudicial to the member.

III. Date of Effectiveness of the Proposed Rule Change and Timing for Commission Action

Within 35 days of the date of publication of this notice in the **Federal Register** or within such longer period (i) As the Commission may designate up to 90 days of such date if it finds such longer period to be appropriate and publishes its reasons for so finding or (ii) as to which the NASD consents, the Commission will:

A. By order approve such proposed rule change, or

B. Institute proceedings to determine whether the proposed rule change should be disapproved.

IV. Solicitation of Comment

Interested persons are invited to submit written data, views, and arguments concerning the foregoing. Persons making written submissions should file six copies thereof with the Secretary, Securities and Exchange Commission, 450 Fifth Street, NW., Washington, DC 20549. Copies of the submission, all subsequent amendments, all written statements with respect to the proposed rule change that are filed with the Commission, and all written communications relating to the proposed rule change beteen the Commission and any person, other than those that may be withheld from the public in accordance with the provisions of 5 U.S.C. 552, will be available for inspection and copying in the Commission's Public Reference Room. Copies of the filing will also be available for inspection and copying at the principal office of the NASD. All submissions should refer to the file number in the caption above and should be submitted by August 27, 1990.

For the Commission, by the Division of Market Regulation, pursuant to delegated authority, 17 CFR 200.30–3(a)(12).

Dated: July 31, 1990.

Jonathan G. Katz,

Secretary.

[FR Doc. 90–18296 Filed 8–3–90; 8:45 am]

BILLING CODE 8010–01–M

[Rel. No. 34–28285; File No. SR–NYSE–90–21]

Self-Regulatory Organizations; New York Stock Exchange, Inc.; Order Approving Proposed Rule Change Relating to the Reduction of Time for Comparing or Closing Out Uncompared Exchange Transactions in Listed Stocks

July 30, 1990.

On March 6, 1989, the New York Stock Exchange, Inc. ("NYSE" or "Exchange") filed with the Commission a proposed rule change under section 19(b)(1) of the Securities Exchange Act of 1934 ("Act").[1] Notice of the proposed rule change was published in the **Federal Register** on June 8, 1990, to solicit comments from interested persons.[2] No comments were received. This order approves the proposal.

I. Description

On September 1, 1988, the Exchange began implementing its Overnight Comparison System ("OCS") by adopting rule 130. This rule established the principle that "regular way" transactions in listed stocks, rights, and warrants (but not listed bonds or options) must be compared or closed out within one business day from the trade date, *i.e.*, "T+1." [3] Rule 130, under its terms, must become fully effective no later than September 30, 1990.

One purpose of the proposed rule change is to establish a specific date for the implementation of rule 130. The date that the Exchange has selected is August 6, 1990, approximately two months earlier than the time when rule 130 would become effective automatically.[4] Other purposes of the proposed rule change are to conform various Exchange rules with the time requirements of rule 130, to distinguish between the comparison time frame differences in stocks and bonds, and to provide for processing procedures that

[1] 15 U.S.C. 78s(b)(1).

[2] *See* Securities Exchange Act Release No. 28061 (May 29, 1990), 55 FR 23331.

[3] The term "regular way" means settlement on the fifth business day after the trade date, *i.e.*, T+5. *See* NYSE Rule 64(3).

For a complete description of OCS and T+1 comparison or close-out, *see* Securities Exchange Act Release No. 26627 (March 14, 1989), 54 FR 11470 [SEC File No. SR–NYSE–88–36]. Rule 130 was amended subsequently to include "next day" and "seller's option" trades. *See* Securities Exchange Act Release No. 27598 (January 9, 1990), 55 FR 1748 [File NO. SR–NYSE–89–43]. *See* NYSE rules 64(2) and 64(4) for definitions, respectively, of "next day" and "sellers's option" trades.

[4] Telephone conversation between Dennis L. Covelli, Managing Director, Post Trade Services, NYSE, and Thomas C. Etter, Jr., Attorney, SEC, on July 26, 1990.

are unique to the electronic resolution of uncompared trades (*i.e.*, questioned trades or "QTs"). The proposed rule change will not affect the settlement of transactions, the majority of which would continue to settle on T+5.

1. Rule 16(A); Resolution of Uncompared ITS Transactions

Rule 16(A) contains procedures for the on-floor resolution of Intermarket Trading System ("ITS") transactions.[5] The proposed amendment changes the time that the Exchange begins to resolve uncompared ITS transactions from the close of business on T+2 to the opening on T+1.

2. Rule 115A.30; OARS Reporting and Comparison

Rule 115A.30 contains the reporting and comparison procedures for the Exchange's Opening Automated Report Service "OARS" and for "OPN." [6] These proposed amendments are mainly technical "housekeeping" changes to conform the Rule to comparison procedures that have evolved over the years. For example, previously, an NYSE clearing member using OARS or OPN was required to submit to a Qualified Clearing Agency [7] the trading data regarding its side of a contract as part of its normal comparison data. Now, however: (1) Clearing firms no longer submit to Qualified Clearing Agencies, as part of their normal comparison data, the OPN trading data—OPN submits it for them and "locks in" that side of the trade; (2) specialists no longer submit to Qualified Clearing Agencies the OARS trading data—OARS will accept any clearing firm submission with OARS named as the contra side after it validates the opening or reopening price, (3) there are no "advisories" to acknowledge ("stamp") for the omnibus OPN trading data, since the System "locks in" OPN trading data; and (4) a Qualified Clearing Agency no longer advises a specialist that an uncompared OARS trade exists, because the uncompared trade is now displayed on the Exchange's Correction System terminal screen.

3. Rule 130; Overnight Comparison of NYSE Equity Trades

Rule 130 is the primary or "enabling" Rule for OCS. It requires "regular way" transactions in listed stocks, rights and warrants to be compared or otherwise closed out on T+1. Rule 130, however, does not apply to listed bonds.

The proposed amendment specifies that rule 130 becomes effective with trades effected on and after August 6, 1990. Another proposed amendment extends the T+1 comparison and close-out requirements to "next day" and "seller's option" contracts.[8]

Rule 131 currently requires NYSE members to (i) Report their transactions to their offices "* * * as promptly as possible * * *;" (ii) maintain adequate comparison facilities; (iii) have their transaction records available in their offices; and (iv) have a representative available in their offices to answer questions regarding transactions.

The proposed amendment requires NYSE members to report their transactions to their offices as promptly as possible but not later than one hour following the close of business. The Exchange may determine to extend this time requirement. A second proposed amendment requires NYSE members to have their transaction records (or copies thereof) relating to their uncompared trades available on the Floor on T+1 to facilitate the resolution of QTs.

5. Rule 133; Comparison; Non-Clearing Transactions

Rule 133 currently requires NYSE members to compare transactions between each other (commonly referred to as "over-the-window") when they do not elect to use the comparison facilities of a Qualified Clearing Agency. The seller sends a two-part comparison form by messenger to the buyer no later than 1 p.m. on T+1.

The proposed amendment conforms rule 131 to the terms of rule 130 by requiring the seller to send the form to the buyer no later than 5 p.m. on Trade Date. The proposed amendment will affect the comparison of "regular way" transactions in stocks, rights, and warrants. It will not affect bonds.

6. Rule 134.A; Differences and Omissions; Cleared Transactions

This Rule contains the operational procedures for the manual resolution of QTs in listed stocks that have been processed through a Qualified Clearing Agency. Resolution was through the use of paper forms on T+3.

The proposed amendment completely rescinds present rule 134.A. Since the electronic resolution procedures of the Exchange's "Correction System" are not readily adaptable to the manual, paper form process, existing rule 134.A will be replaced with a proposed new rule 134.A containing appropriate procedures for the electronic resolution of QTs within the time frame requirements of rule 130.

7. Rule 135; Differences and Omissions; Non-Cleared Transactions

Rule 135 contains the operational procedures for the resolution of QTs that were not processed through a Qualified Clearing Agency. The proposed amendments shorten the resolution time frame from T+3 to T+1 for transactions in stocks, rights, and warrants for "regular way," "next day" and "seller's option" settlement. Comparison time frames for uncompared bond transactions remain unchanged.

8. Rule 137; Written Contracts

Rule 137 currently requries Exchange members who effect transactions in stocks on a "seller's option" basis, transactions in bonds on a "seller's option" basis for more than seven days, and all transactions on a "when issued" and "when distributed" basis that are not compared through a Qualified Clearing Agency to compare them with each other "over the window." The process is similar to that contained in rule 133, whereby written contracts are exchanged not later than T+2 for other types of contracts.

The proposed amendment conforms rule 137 to the scheme established in rule 130 by requiring members to exchange written contracts in stock on a "seller's option" basis and all "when issued" and "when distributed" securities no later than one hour after the close of business on Trade Date rather than on T+2. The time frames for comparing "sellers option" transactions for more than seven business days in bonds remains unchanged.

II. Rationale for the Proposal

The NYSE states in its filing that OCS will substantially increase the efficiency of the post-trade comparison process by ensuring that "regular way," "next day," and "seller's option" transactions in stocks, rights, and warrants are compared or otherwise closed out on T+1. Additionally, the Exchange emphasizes that OCS, by requiring that uncompared trades be resolved or otherwise closed out not later than T+1, will reduce—to one business day—the length of time NYSE members and

[5] *See* NYSE rule 15 for the definition of "ITS."

[6] "OARS" is an NYSE order system that processes non-systematized trades received by the Exchange before the opening. OARS stores eligible pre-opening orders, receives the opening price from the specialist and assigns such price to each stored order, and transmits execution reports to the member firms that submitted the orders. "OPN" is a related NYSE system that similarly processes systematized trades received before the opening. *See* NYSE rule 115A.30.

[7] *See* NYSE rule 132.10 for the definition of "Qualified Clearing Agency."

[8] *See, supra,* note 3.

member organizations are exposed to the risk of loss due to the market fluctuations of uncompared trades. The Exchange states that these requirements will help protect investors and the public interest, as called for in section 6(b)(5) of the Act, in that they will help prevent fraudulent and manipulative acts and practices, promote just and equitable principles of trade, and foster cooperation and coordination with persons engaged in regulating clearing, settling, processing information with respect to, and facilitating transactions in, securities. The Exchange notes that OCS also meets the requirements of section 17A(b)(3)(F) of the Act in that it will promote the prompt and accurate clearance and settlement of securities transactions.

III. Discussion

The Commission believes that this proposal is consistent with the Act, and particularly with sections 6(b)(5) and 17A. The proposal implements, as of Monday, August 6, 1990, NYSE's T+1 "comparison or close-out" requirements for regular-way, next-day, and seller's option transactions in listed stocks, rights, and warrants. As noted above, NYSE rule 130, the basic enabling rule that mandates T+1 trade comparison or close-out, already has been approved by the Commission.[9] This proposal marks the important final step of that rule's full implementation.

Section 6(b)(5) of the Act states that exchange rules should be designed: to foster cooperation and coordination with persons engaged in regulating, clearing, settling, and processing information with respect to securities transactions; to remove impediments to a free and open market; and to protect investors and the public interest. Additionally, section 17A(a)(1) of the Act notes the need for prompt and efficient clearance and settlement of securities transactions, and it expressly encourages the use of automation to achieve more efficient and safer clearance and settlement procedures. As the Commission stated in its order approving rule 130, shortening the equity trade comparison and close-out cycle from T+5 to T+1, through the use of automated systems, reduces the risk exposure to investors and NYSE member organizations and contributes to the prompt and efficient clearance and settlement of securities transactions.[10]

The Commission notes that NYSE has implemented rule 130 incrementally over the past 16 months in order to minimize disruption to its member organizations. This gradual implementation process has reduced the required time frames for equity trades comparison from T+5 to T+1 and for close-outs from T+5 to T+2.[11] This rule change implements T+1 equity close-out requirements.

The Commission notes that existing rule 134.B, containing the procedures for resolving QTs in listed bonds, is not proposed for amendment. NYSE does not plan to extend OCS to bonds at this time because it considers the uncompared rate for bonds as not significant.[12] The Commission expects that NYSE soon will extend rule 130 to cover bond trades that are not locked-in trades or subject to next-day settlement, *i.e.*, convertible bond trades. These bonds trade in the auction market and bear many traits of stocks, including, in some instances, the volatility of stocks. Convertible bonds are, in fact, included within the Act's definition of "equity security."[13] Accordingly, the Commission believes that they should be included within rule 130.

The final implementation of T+1 compare or close-out requirements for uncompared equity trades advances an important Commission goal. The risks posed by uncompared equity trades and by then existing T+5 close-out requirements came under intense scrutiny following the Market Break of October 1987. During the Market Break, uncompared trades increased alarmingly and, for several reasons, became a major stress point in the clearance and settlement process. Among other things, the span of five trading days in which to resolve uncompared trades, when coupled with record market volatility (primarily downward), threatened to impose severe financial penalties on those broker-dealers that could not resolve trade comparison errors quickly, or at any rate before settlement with their customers on T+5, and such risks ultimately threatened clearing agencies and other financial institutions.[14] This proposal significantly reduces these risks.

NYSE has represented by letter to the Commission that the hardware and software systems that the Exchange is using in support of its T+1 trade comparison or close-out program, under its rule 130 (*i.e.*, OCS), are adequate for both routine and peak levels of equity activity. The Exchange states that it has based its T+1 system design on reasonable estimates of peak traffic and on the capacity of its computer system. The Exchange also has represented that this proposal does not necessitate any changes in its electronic security measures and that the current level of computer security is satisfactory to prevent external and internal violations.[15] Additionally, the Exchange notes that OCS has been subjected to a 600 million share day stress test involving 40,000 QTs during which time OCS operated successfully.[16]

IV. Conclusion

For the reasons discussed above, the Commission finds that the proposed rule change is consistent with the Act, particularly with sections 6(b)(5) and 17A of the Act, and the rules and regulations thereunder.

It is therefore ordered, pursuant to section 19(b)(2) of the Act, that the above-mentioned proposed rule change (File No. SR–NYSE–90–21) be, and hereby is, approved.

For the Commission, by the Division of Market Regulation, pursuant to delegated authority.[17]

Jonathan G. Gatz,

Secretary.

[FR Doc. 90–18297 Filed 8–3–90; 8:45 am]

BILLING CODE 8010–01–M

[9] *See* Securities Exchange Act Release No. 28627 (March 30, 1989), 54 FR 11470 (File No. SR–NYSE–88–36). When fully phased-in, rule 130 will require uncompared trades to be closed out by T+1.

[10] *See* Securities Exchange Act Release No. 28627 (March 14, 1989), 54 FR 11470 (File No. SR–NYSE–88–36).

[11] *See, e.g.*, Securities Exchange Act Release No. 28023 (May 17, 1990), 55 FR 21473 (File No. SR–NYSE–90–16).

[12] The low uncompared rate for bonds results from the fact that most NYSE bonds are traded in NYSE's Automated Bond System where the trades are locked-in and where the uncompared trade rate is zero. The remaining NYSE bond trades consist of U.S. Government securities, which have next-day settlement, and convertible bonds. Telephone conversation between Dennis L. Covelli, Managing Director, Post Trade Services, NYSE, and Thomas C. Etter, Jr., Attorney, SEC, on July 26, 1990.

[13] *See* section 3(a)(11) of the Act, 15 U.S.C. 78c(a)(11).

[14] *See* Division of Market Regulation, Securities and Exchange Commission, *The October 1987 Market Break*, Ch. 10, pp. 5–13 (February 1988). *See also Report of the Presidential Task Force on Market Mechanisms* (known as the "Brady Report"), 51–52, Study VI at 16, 48–49 (December 1987); *Working Group on Financial Markets*, Appendix D at 6–7 (May 1988).

[15] *See* letter from Dennis L. Covelli, Managing Director, Post Trade Services, NYSE, to Thomas C. Etter, Jr., Attorney, SEC, dated May 21, 1990.

[16] Telephone conversation between Dennis L. Covelli, Managing Director, Post Trade Services, NYSE, and Thomas C. Etter, Jr., Attorney, SEC, on July 26, 1990. Another OCS stress test, to involve 850 million shares and 55,000 QTs, is scheduled for September 15, 1990. *Id.*

[17] 17 CFR 200.30–3(a)(12).

[Rel. No. IC-17626; 812-7413]

ABT Growth and Income Trust, et al.; Application

July 30, 1990.

AGENCY: Securities and Exchange Commission ("SEC").

ACTION: Notice of Application for Exemption under the Investment Company Act of 1940 ("1940 Act").

APPLICANTS: ABT Growth and Income Trust, ABT Utility Income Fund, Inc., ABT Investment Series, Inc., ABT Money Market Series, Inc., ABT Southern Master Trust and all future investment companies for which Palm Beach Capital Management serves as investment adviser (individually a "Fund", together the "Funds") and Palm Beach Capital Management, Ltd. (collectively, the "Applicants").

RELEVANT 1940 ACT SECTION: Exemption requested under section 17(d) and rule 17d-1 thereunder of the 1940 Act.

SUMMARY OF APPLICATION: Applicants seek an order to permit the operation of a joint trading account in repurchase agreements.

FILING DATES: The application was filed on October 19, 1989 and amended on May 4 and July 25, 1990.

HEARING OR NOTIFICATION OF HEARING: An order granting the application will be issued unless the SEC orders a hearing. Interested persons may request a hearing by writing to the SEC's Secretary and serving Applicants with a copy of the request, personally or by mail. Hearing requests should be received by the SEC by 5:30 p.m. on August 28, 1990, and should be accompanied by proof of service on the Applicants, in the form of an affidavit or, for lawyers, a certificate of service. Hearing requests should state the nature of the writer's interest, the reason for the request, and the issues contested. Persons may request notification of a hearing by writing to the SEC's Secretary.

ADDRESSES: Secretary, SEC, 450 Fifth Street, NW., Washington, DC 20549; on behalf of Applicants, Palm Beach Capital Management, 205 Royal Palm Drive, Palm Beach, Florida 33480, Attn: Timothy W. Cox.

FOR FURTHER INFORMATION CONTACT: Marc Duffy, Staff Attorney, (202) 272-2511, or Max Berueffy, Branch Chief, (202) 272-3016.

SUPPLEMENTARY INFORMATION: The following is a summary of the application. The complete application may be obtained for a fee at the SEC's Public Reference Branch or by contacting the SEC's commercial copier at (800) 231-3282 (in Maryland (301) 258-4300).

Applicant's Representation

1. The Funds are open-end investment companies registered under the 1940 Act. The shares of ABT Investment Series, Inc. are offered in three series, the ABT Emerging Growth Fund, ABT Security Income Fund and ABT U.S. Government Securities Fund. The shares of ABT Money Market Series, Inc. and ABT Southern Master Trust are both offered in one series. Each of the Funds has entered into an investment advisory contract with Palm Beach Capital Management, Ltd. (the "Adviser").

2. The Adviser arranges for the purchase of suitable short-term securities by each Fund during the day so that each Fund may have all of its net assets invested and not sitting in idle cash. However, at the end of each trading day each of the Funds may have uninvested cash balances in its custodial bank. The Adviser projects the total available cash of each Fund, which will not otherwise be invested that day. The projection may be adjusted to reflect any additional amounts that become available during the day. The uninvested cash of each Fund is normally invested in short-term money market securities, overnight repurchase agreements with a bank or broker-dealer, or other short-term investments authorized by its investment policies.

3. Each of the Funds is presently authorized to invest in repurchase agreements and has established certain systems and standards that comply with the requirements regarding repurchase agreements set forth by the SEC in its published releases, guidelines and interpretations with respect to repurchase agreements including, to the fullest extent of Applicants' knowledge, all "no-action" letters. The Funds' standards include quality standards for issuers of repurchase agreements and requirements that the repurchase agreements will be at least 100% collateralized at all times. Applicants have a continuing obligation to monitor the SEC's published statements on repurchase agreements, and in the event the SEC sets forth different or additional requirements, each Fund intends to modify its systems and standards accordingly.

4. On behalf of the Funds, the repurchase desk operated by the Adviser each morning begins negotiating the repurchase agreements for that day, including the applicable interest rate, and determines what securities will be required as collateral. The estimated amount of the required collateral is based on preliminary information indicating the amount of available cash for that day.

5. Currently, each Fund separately pursues, secures and implements such investments, resulting in certain inefficiencies and increased costs, and limiting the return that some or all of the Funds could otherwise achieve. Generally, there can remain, in the respective account of each Fund, some amount of its assets that is received too late or is too small to be effectively invested in a separate transaction and/or at a rate reflecting the cost and investment risk of the transaction.

6. The Funds proposed to establish a joint account for the purpose of entering into repurchase agreements. At the conclusion of its daily trading activity, each Fund participating in the joint account on that day would automatically transfer its remaining uninvested cash into the joint account at the Funds' custodial bank. In the event the Funds in the future have more than one custodian bank, the Funds propose to establish a joint account at each such custodian bank. The joint account would not be distinguishable from any other account maintained by a Fund with its custodian bank except that monies from each Fund could be deposited in the custodian bank on a commingled basis. The account would not have any separate existence which would have indicia of a separate legal entity. The sole function of this account would be to provide a convenient way of aggregating what otherwise would be the one or more individual daily transactions for each Fund necessary to manage their respective daily uninvested cash balances.

7. The registration statement of one of the Applicants, ABT Investment Series, Inc. ("ABTIS"), contains a fundamental investment policy which states that "none of the Funds may: (v) Participate on a joint or a joint and several basis in any trading account in securities. The 'bunching' of orders of the Funds—or of the Funds and of other accounts under the investment management of the investment adviser—for the sale or purchase of portfolio securities shall not be considered participation in a joint securities trading account."

8. Each of the Funds would participate in the proposed joint account on the same basis as every other Fund in conformity with its respective fundamental investment objectives, policies and restrictions. Any future Funds that participate in the joint account would be required to do so on the same terms and conditions as the existing Funds have set forth herein.

9. Applicants believe that a Fund's investment in the joint account will not be subject to the claims of creditors, whether brought in bankruptcy, insolvency or other legal proceedings, or of any other participant Fund in the joint account. Each Fund's liability on any repurchase agreement purchased by the joint account will be limited to its interest in such repurchase agreement.

10. The Adviser would have no monetary participation in the joint account, but would be responsible for investing monies in the account, establishing accounting and control procedures, ensuring that the equal treatment of each Fund, and ensuring that the assets of the Funds would continue to be held under proper bank custodial procedures.

11. Applicants believe the joint account would save the Funds substantial amounts in yearly transaction fees, allow the Funds to negotiate higher rates of return, reduce the possibility of errors by reducing the number of trade tickets, and allow the Funds greater flexibility to cover excess cash near the end of each trading day. Applicants estimate that, if the joint account is put in place, the Funds would experience aggregate annual savings of approximately $19,200 in transaction fees.

12. The Directors/Trustees of the Funds have satisfied themselves that the proposed method of operating the joint account would not result in any conflicts of interest between any of the Funds or between a Fund and the Adviser. They have further determined that there does not appear to be any basis upon which to predict greater benefit to one Fund than to another. They have also considered that although the Adviser would gain some benefit through administrative convenience and some possible reduction in clerical costs, the primary beneficiaries would be the Funds and their shareholders because the joint account would be a more efficient and productive way of administering these daily investment transactions. On the basis of their considerations, the Directors/Trustees have determined that the operation of the joint account would be free of any inherent bias favoring one Fund over another and should eliminate bias due to size or lack thereof in any transaction, and that the anticipated benefits flowing to each Fund would fall within an acceptable range of fairness. They have further determined that future participation in such joint trading account by one or more Funds that do not presently exist would not alter their conclusions with respect to participation by the present Funds and that it would be desired to permit such future participation without the necessity of applying for an amendment to the requested Order.

Applicants' Conditions

As an express condition to obtaining an exemptive order, Applicants agree to operate the joint account according to the following procedures:

1. A separate cash account would be established at the Custodian Bank into which each Fund would deposit its daily uninvested net cash balances.

2. Cash in the joint account would be invested solely in repurchase agreements collateralized by suitable United States government obligations; such repurchase agreements would satisfy the standards for repurchase agreement transactions established by the Funds.

3. Particular United States government obligations to be held as collateral would be identified and the Funds' Custodian Bank would be notified. The securities would either be wired to the account of the Custodian Bank at the proper Federal Reserve Bank, transferred to a subcustodian account of the Fund at another qualified bank or redesignated and segregated on the records of the Custodian Bank if the Custodian Bank is already the recorded holder of the collateral for the repurchase agreement.

4. All investments held by the joint account would be valued on an amortized cost basis. Each Fund relying on rule 2a–7 under the 1940 Act in order to value its assets on the basis of amortized cost would use the average maturity of the joint account for the purpose of computing the Fund's average portfolio maturity with respect to the portion of its assets held in such account on that day.

5. In order to assure that there would be no opportunity for one Fund to use any part of a balance on the joint account credited to another Fund, no Fund would be allowed to create a negative balance in the joint account for any reason, although it would be permitted to draw down its entire balance at any time; each Fund would retain the sole ownership rights to any of its assets, including interest payable on the assets invested in the joint account.

6. Each Fund would participate in the income earned or accrued in the joint account and all instruments (i.e., cash and United States government securities) held in the joint account on the basis of the percentage of the total amount in the account on any day represented by its share of the account.

7. Each Fund's decision to invest in the joint account would be solely at its option, with a Fund being required neither to invest a minimum amount nor to maintain a minimum balance.

8. Each Fund's investment in the joint account would be documented daily on the books of both the Fund and the Fund's custodian bank.

9. All repurchase agreements will have an overnight, over the weekend or over a holiday duration, and in no event a duration of more than seven days.

10. The administration of the joint account would be within the fidelity bond coverage required by section 17(g) of the 1940 Act and rule 17g–1 thereunder.

11. Palm Beach Capital Management, Ltd. would administer the investment of the cash balances in and operation of the joint account and would not collect any separate fees for the management of the joint account.

12. The governing bodies of each existing Fund and any future Funds participating in the joint account would evaluate annually the joint account arrangements, and would continue participation in the account only if they were to determine that there was a reasonable likelihood that the Fund and its shareholders would benefit from continued participation.

13. No fund offered by ABTIS will participate in the joint trading account in repurchase agreements until the shareholders of such funds have approved a change in the fundamental investment policy of ABTIS to allow for the participation in a joint trading account set up for entering into joint repurchase agreements.

For the Commission, by the Division of Investment Management, under delegated authority.

Jonathan G. Katz,

Secretary.

[FR Doc. 90–18298 Filed 8–3–90; 8:45 am]

BILLING CODE 8010–01–M

[Rel. No. IC–17627; File No. 811–5139]

Benham Variable Insurance Trust

July 30, 1990.

AGENCY: Securities and Exchange Commission (the "SEC" or "Commission").

ACTION: Notice of Application for an Order under the Investment Company Act of 1940 (the "1940 Act").

APPLICANT: Benham Variable Insurance Trust (the "Applicant").

RELEVANT 1940 ACT SECTIONS: Order requested under section 8(f).

SUMMARY OF APPLICATION: Applicant seeks an order under section 8(f) of the Act declaring that it has ceased to be an investment company.

FILING DATE: The application was filed on June 29, 1990.

HEARING OR NOTIFICATION OF HEARING: If no hearing is ordered, the application will be granted. Any interested person may request a hearing on this application, or ask to be notified if a hearing is ordered. Any requests must be received by the SEC by 5:30 p.m., on August 24, 1990. Request a hearing in writing, giving the nature of your interest, the reason for the request, and the issues you contest. Serve the Applicant with the request, either personally or by mail, and also send it to the Secretary of the SEC, along with proof of service by affidavit, or, for lawyers, by certificate. Request notification of the date of a hearing by writing to the secretary of the SEC.

ADDRESSES: Secretary, SEC, 450 5th Street, NW., Washington, DC 20549. Applicant, 1665 Charleston Road, Mountain View, CA 94043.

FOR FURTHER INFORMATION CONTACT: Michael V. Wible, Staff Atorney, at (202) 272–2026, or Heidi Stam, Assistant Chief, Office of Insurance Products, at (202) 272–2060 (Division of Investment Management).

SUPPLEMENTARY INFORMATION: Following is a summary of the application; the complete application is available for a fee from either the SEC's Public Reference Branch in person or the SEC's commercial copier (800) 231–3282 (in Maryland (301) 253–4300).

Applicant's Representations

1. The Applicant is registered under the 1940 Act as an open-end, diversified management investment company. The Applicant filed a Notification of Registration under the 1940 Act with the Commission on April 24, 1987. The initial registration statement was declared effective on March 26, 1988.

2. The Applicant filed a Registration Statement on Form N–1A under the Securities Act of 1933 on April 24, 1987, and registered an indefinite number of securities. The Registration Statement went effective on March 26, 1988 and the initial public offering commenced immediately thereafter.

3. Until the consummation of the transactions described herein, the Applicant offered shares of its various portfolios to the Benham Variable Account ("Benham Account") of Monarch Life Insurance Company ("Monarch") and Fund BE ("Fund BE") of First Variable Life Insurance Company ("First Variable").

4. On May 12, 1989, upon the recommendation of its investment adviser, Benham Management Corporation ("BMC"), the Applicant's Board of Trustees determined that the Applicant should discontinue offering shares of its portfolios to the extent practicable and that the Applicant should be terminated in due course.

5. On September 20, 1989, Monarch, Benham Account, Variable Account B of Monarch Life Insurance Company ("Variable Account B"), and Monarch Financial Services, Inc. ("MFSI") filed an application for an order of exemption from section 17(a) of the 1940 Act pursuant to 17(b) and for an order of approval pursuant to section 26(b) of the 1940 Act permitting the transfer of the investment base of the Benham Account to Variable Account B and approving the substitution of shares of the Oppenheimer Variable Account Funds and the Oppenheimer Zero Coupon U.S. Treasuries Trust, Series A through E for shares of the Applicant. The Commission issued a Notice on February 23, 1990 (Investment Company Act Release No. 17356) and an Order approving such replacement on March 22, 1990 (Investment Company Act Release No. 17397). The transfer and substitution was effected as proposed.

6. On November 16, 1989, First Variable, Fund BE, Fund E ("Fund E") of First Variable Life Insurance Company, and MFSI filed an application for an order of exemption from section 17(a) of the 1940 Act pursuant to section 17(b) and for an order of approval pursuant to section 26(b) of the 1940 Act permitting the transfer of accumulation value under flexible purchase payment deferred variable annuity policies and single purchase payment immediate variable annuity policies issued through Fund BE to Fund E, and approving the substitution of shares of the Variable Investors Series Trust for shares of the Applicant. The Commission issued a Notice on April 13, 1990 (Investment Company Act Rel. No. 17431) and an Order approving such replacement on May 10, 1990 (Investment Company Act Rel. No. 17484). The transfer and substitution was effected as proposed.

7. As of May 11, 1990, the number of shares of beneficial interest outstanding, and the aggregate and per share net asset value ("NAV"), were as follows:

Portfolio	No. of shares	Aggregate NAV	Per share NAV
U.S. Government and High Quality Money Market	4,071,676	$4,071,676	$1.00
U.S. Government and High Quality Income	29,563	297,020	10.05
U.S. Government Zero–1995	9,919	105,959	10.68
U.S. Government Zero–2000	7,750	81,177	10.47
U.S. Government Zero–2005	99,489	1,090,636	10.96
Equity Index	24,576	324,914	13.22
Asset Allocation	163,693	1,769,525	10.81
Natural Resources	10,258	103,738	10.11

8. The Monarch and First Variable shareholdings were liquidated on May 11, 1990. BMC, the sole remaining shareholder, liquidated its shareholdings on May 17, 1990.

9. Various expenses were incurred in connection with the liquidation. These expenses included fees for the services of the Applicant's independent auditors and outside legal counsel, and custodian expenses. All of these expenses were allocated to the Applicant's Portfolios based on each Portfolio's net assets. Monarch, First Variable, BMC and Applicant have contracted to reimburse the Applicant's expenses in excess of specified expense limits. Since the expenses incurred in connection with the liquidation were well in excess of the contractual limits, Applicant was reimbursed for such expenses.

10. All of the Applicant's required N–SAR filings have been made, and the Applicant represents that all N–SAR filings will continue to be made until an Order has been entered declaring that the Applicant has ceased to be an investment company.

11. The Applicant is not engaged, and does not propose to engage, in any business activities other than those necessary for the winding-up of its affairs.

12. Except for the transactions described herein, the Applicant has not, within the last 18 months, transferred any of its assets to a separate trust, the

beneficiaries of which were or are security holders of Applicant.

13. The Applicant is not a party to any current or pending litigation or administrative proceeding.

For the Commission, by the Division of Investment Management, pursuant to delegated authority.

Jonathan G. Katz,

Secretary.

[FR Doc. 90-18299 Filed 8-3-90; 8:45 am]

BILLING CODE 8010-01-M

DEPARTMENT OF TRANSPORTATION

Aviation Proceedings; Agreements Filed During the Week Ended July 27, 1990

The following Agreements were filed with the Department of Transportation under the provisions of 49 U.S.C 412 and 414. Answers may be filed within 21 days of date of filing.

Docket Number: 47083
Date filed: July 23, 1990
Parties: Members of the International Air Transport Association
Subject: Canada-Middle East Resolutions
Proposed Effective Date: October 1, 1990

Docket Number: 47084
Date filed: July 23, 1990
Parties: Members of the International Air Transport Association
Subject: Areawide (USA/US Territories)
Proposed Effective Date: October 1, 1990

Docket Number: 47091
Date filed: July 26, 1990
Parties: Members of the International Air Transport Association
Subject: South Atlantic Resolutions
Proposed Effective Date: October 1, 1990

Docket Number: 47092
Date filed: July 26, 1990
Parties: Members of the International Air Transport Association
Subject: South Pacific (except to/from USA/US Territories)
Proposed Effective Date: October 1, 1990

Docket Number: 47093
Date filed: July 26, 1990
Parties: Members of the International Air Transport Association
Subject: South Pacific (to/from USA/US Territories)
Proposed Effective Date: October 1, 1990

Docket Number: 47094
Date filed: July 26, 1990
Parties: Members of the International Air Transport Association
Subject: (Europe to USA/US Territories)
Proposed Effective Date: October 1, 1990

Docket Number: 47095
Date filed: July 26, 1990
Parties: Members of the International Air Transport Association
Subject: Mail Vote 423 (General increase from Australia to Middle East)
Proposed Effective Date: October 1, 1990

Docket Number: 47096
Date filed: July 26, 1990
Parties: Members of the International Air Transport AssociationEurope-Southwest Pacific Expedited RESOS
Proposed Effective Date: September 1, 1990

Phyllis T. Kaylor,

Chief, Documentary Services Division.

[FR Doc. 90-18225 Filed 8-3-90; 8:45 am]

BILLING CODE 4910-62-M

Applications for Certificates of Public Convenience and Necessity and Foreign Air Carrier Permits Filed During the Week Ended July 27, 1990

The following applications for certificates of public convenience and necessity and foreign air carrier permits were filed under subpart Q of the Department of Transportation's Procedural Regulations (See 14 CFR 302.1701 *et. seq.*) The due date for answers, conforming application, or motion to modify scope are set forth below for each application. Following the answer period DOT may process the application by expedited procedures. Such procedures may consist of the adoption of a show-cause order, a tentative order, or in appropriate cases a final order without proceedings.

Docket Number: 47085
Date filed: July 24, 1990
Due Date for Answers, Conforming Applications, or Motion to Modify Scope:
August 21, 1990
Description: Application of Mesa Airlines, Inc., pursuant to section 401(d)(1) of the Act and subpart Q of the Regulations, requests authority to engage in interstate and overseas scheduled air transportation of persons, property, and mail between any point in any State in the United States or the District of Columbia, or any territory or possession of the United States, and any other point in any State of the United States or the District of Columbia, or any territory or possession of the United States.

Docket Number: 47086
Date filed: July 24, 1990
Due Date for Answers, Conforming Applications, or Motion to Modify Scope:
August 21, 1990
Description: Application of American Airlines, Inc., pursuant to section 401 of the Act and subpart Q of the Regulations, applies for amendment of its certificate of public convenience and necessity for Route 137 so as to authorize scheduled foreign air transportation of persons, property, and mail between Raleigh/Durham and Bermuda.

Docket Number: 47087
Date filed: July 24, 1990
Due Date for Answers, Conforming Applications, or Motion to Modify Scope:
July 28, 1990
Description: Application of Air Belguim International, S.A., pursuant to section 402 of the Act and subpart Q of the Regulations, requests a foreign air carrier permit to engage in foreign charter air transportation of persons, property and mail between any point or points in Belguim and any point or points in the United States, with or without stop-overs, and between any point or points in the United States and any point or points not in the United States or Belgium, including intermediate and beyond points.

Docket Number: 47089
Date filed: July 25, 1990
Due Date for Answers, Conforming Applications, or Motion to Modify Scope:
August 22, 1990
Description: Application of Continental Airlines, Inc., pursuant to section 401 of the Act and subpart Q of the Regulations applies for a certificate of public convenience and necessity which would authorize Continental to provide scheduled foreign air transportation of persons, property and mail between Newark, New Jersey, on the one hand, and Madrid, Spain, on the other hand.

Docket Number: 45364
Date filed: July 27, 1990
Due Date for Answers, Conforming Applications, or Motion to Modify Scope:
August 24, 1990
Description: Amendment No. 2 to the Application of I.L.P.O. Aruba N.V. request an amended foreign air carrier permit authorizing it to operate the same services it currently operates under exemption authority plus the addition of Jamaica as a second intermediate point.

Docket Number: 46912
Date filed: July 27, 1990
Due Date for Answers, Conforming Applications, or Motion to Modify Scope:
August 24, 1990
Description: Amendment to the Application of Aerosur, Montevideo, Uruguay, for a foreign air carrier permit to engage in scheduled and

charter air transportation of persons, property and mail.

Phyllis T. Kaylor,

Chief, Documentary Servcies Division.

[FR Doc. 90–18224 Filed 8–3–90; 8:45 am]

BILLING CODE 4910–62–M

Office of the Secretary

Application of Empire Airlines, Inc. for Certificate Authority

AGENCY: Department of Transportation.

ACTION: Notice of order to show cause.

[Order 90–7–62 Docket 46955]

SUMMARY: The Department of Transportation is directing all interested persons to show cause why it should not issue an order finding Empire Airlines, Inc., fit and awarding it a certificate of public convenience and necessity to engage in domestic scheduled air transportation of persons, property, and mail.

DATES: Persons wishing to file objections should do so no later than August 15, 1990.

ADDRESSES: Objections and answers to objectons should be filed in Docket 46955 and addressed to the Documentary Services Division (C–55, Room 4107), U.S. Department of Transportation, 400 Seventh Street, SW., Washington, DC 20590 and should be served upon the parties listed in Attachment A to the order.

FOR FURTHER INFORMATION CONTACT: Mrs. Janet A. Davis, Air Carrier Fitness Division (P–56, Room 6411), U.S. Department of Transportation, 400 Seventh Street SW., Washington, DC 20590, (202) 366–9721.

Dated: July 30, 1990.

Patrick V. Murphy, Jr.

Deputy Assistant Secretary for Policy and International Affairs.

[FR Doc. 90–18226 Filed 8–3–90; 8:45 am]

BILLING CODE 4910–62–M

[Order 90–7–63]

Fitness Determination of Air Molokai, Inc.

AGENCY: Department of Transportation.

ACTION: Notice of commuter air carrier fitness determination—order 90–7–63, order to show cause.

SUMMARY: The Department of Transportation is proposing to find Air Molokai, Inc., fit, willing, and able to provide commuter air service under section 419(e)(1) of the Federal Aviation Act.

RESPONSES: All interested persons wishing to respond to the Department of Transportation's tentative fitness determination should file their responses with the Air Carrier Fitness Division, P–56, Department of Transportation, 400 Seventh Street, SW., Room 6401, Washington, DC 20590, and serve them on all persons listed in Attachment A to the order. Responses shall be filed no later than August 15, 1990.

FOR FURTHER INFORMATION CONTACT: Ms. Delores King, Air Carrier Fitness Division (P–56, Room 6401), U.S. Department of Transportation, 400 Seventh Street, SW., Washington, DC 20590, (202) 366–2343.

Dated: July 30, 1990.

Patrick V. Murphy, Jr.,

Deputy Assistant Secretary for Policy and International Affairs.

[FR Doc. 90–18222 Filed 8–3–90; 8:45 am]

BILLING CODE 4910–62–M

[Order 90–7–64]

Fitness Determination of Star, Inc. d/b/a Star Aviation

AGENCY: Department of Transportation.

ACTION: Notice of commuter air carrier fitness determination—order to show cause.

SUMMARY: The Department of Transportation is proposing to find that Star, Inc. d/b/a Star Aviation is fit, willing, and able to provide commuter air service under section 419(e)(1) of the Federal Aviation Act.

RESPONSES: All interested persons wishing to respond to the Department of Transportation's tentative fitness determination should file their responses with the Air Carrier Fitness Division, P–56, Room 6401, Department of Transportation, 400 Seventh Street, SW., Washington, DC 20590, and serve them on all persons listed in Attachment A to the order. Responses shall be filed no later than August 15, 1990.

FOR FURTHER INFORMATION CONTACT: Mrs. Janet A. Davis, All Carrier Fitness Division, Department of Transportation, 400 Seventh Street, SW., Washington, DC 20590, (202) 366–9721.

Dated: July 30, 1990

Patrick V. Murphy, Jr.,

Deputy Assistant Secretary for Policy and International Affairs.

[FR Doc. 90–18223 Filed 8–3–90; 8:45 am]

BILLING CODE 4910–62–M

Order Adjusting the Standard Foreign Fare Level Index

[Docket No. 37554]

The International Air Transportation Competition Act (IATCA), Public Law 96–192, requires that the Department, as successor to the Civil Aeronautics Board, establish a Standard Foreign Fare Level (SFFL) by adjusting the SFFL base periodically by percentage changes in actual operating costs per available seat-mile (ASM). Order 80–2–69 established the first interim SFFL, and Order 90–6–16 established the currently effective two-month SFFL applicable through July 31, 1990.

In establishing the SFFL for the two-month period beginning August 1, 1990, we have projected non-fuel costs based on the year ended March 31, 1990 data, and have determined fuel prices on the basis of the latest experienced monthly fuel cost levels as reported to the Department.

By Order 90–7–65 fares may be increased by the following adjustment factors over the October 1979 level:

Atlantic: 1.2577
Latin America: 1.3820
Pacific: 1.6525
Canada: 1.3982

FOR FURTHER INFORMATION CONTACT: Keith A. Shangraw (202) 366–2439.

By the Department of Transportation.

Dated: July 31, 1990.

Patrick V. Murphy, Jr.,

Deputy Assistant Secretary for Policy and International Affairs.

[FR Doc. 90–18227 Filed 8–3–90; 8:45 am]

BILLING CODE 4910–62–M

Federal Aviation Administration

Approval of Noise Compatibility Program, Colorado Springs Municipal Airport, Colorado Springs, CO

AGENCY: Federal Aviation Administration, DOT.

ACTION: Notice.

SUMMARY: The Federal Aviation Administration (FAA) announces its findings on the noise compatibility program submitted by the Director of Aviation of the Colorado Springs Municipal Airport under the provisions of title I of the Aviation Safety and Noise Abatement Act of 1979 (Pub. L. 96–193) and 14 CFR part 150. These findings are made in recognition of the description of Federal and non-Federal responsibilities in Senate Report No. 96–52 (1980).

On March 23, 1990, the FAA determined that the noise exposure maps submitted by the Director of Aviation under part 150 were in compliance with applicable requirements. On July 10, 1990, the Assistant Administrator for Airports approved the Colorado Springs Municipal Airport noise compatibility program. Most of the program elements were approved.

EFFECTIVE DATE: The effective date of the FAA's approval of the Colorado Springs Municipal Airport noise compatibility program is July 10, 1990.

FOR FURTHER INFORMATION CONTACT: Dennis G. Ossenkop; Federal Aviation Administration; Northwest Mountain Region; Airports Division, ANM–611; 17900 Pacific Highway South; C–68966; Seattle, Washington 98168. Documents reflecting this FAA action may be reviewed at this same location.

SUPPLEMENTARY INFORMATION: This notice announces that the FAA has given its overall approval to the noise compatibility program for Colorado Springs Municipal Airport, effective July 10, 1990. Under section 104(a) of the Aviation Safety and Noise Abatement Act of 1979 (hereinafter referred to as "the Act"), an airport operator who has previously submitted a noise exposure map may submit to the FAA a noise compatibility program which sets forth the measures taken or proposed by the airport operator for the reduction of existing noncompatible land uses and prevention of additional noncompatible land uses within the area covered by the noise exposure maps. The Act requires such a program to be developed in consultation with interested and affected parties including the state, local communities, government agencies, airport users, and FAA personnel.

Each airport noise compatibility program developed in accordance with Federal Aviation Regulation (FAR) part 150 is a local program, not a Federal program. The FAA does not substitute its judgment for that of the airport proprietor with respect to which measures should be recommended for action. The FAA's approval or disapproval of FAR part 150 program recommendations is measured according to the standards expressed in part 150 and the Act and is limited to the following determinations:

a. The noise compatibility program was developed in accordance with the provisions and procedures of FAR part 150;

b. Program measures are reasonably consistent with achieving the goals of reducing existing noncompatible land uses around the airport and preventing the introduction of additional noncompatible land uses;

c. Program measures would not create an undue burden on interstate or foreign commerce, unjustly discriminate against types or classes of aeronautical uses, violate the terms of airport grant agreements, or intrude into areas preempted by the Federal Government; and

d. Program measures relating to the use of flight procedures can be implemented within the period covered by the program without derogating safety, adversely affecting the efficient use and management of the navigable airspace and air traffic control systems, or adversely affecting other powers and responsibilities of the Administrator prescribed by law.

Specific limitations with respect to FAA's approval of an airport noise compatibility program are delineated in FAR part 150, § 150.5. Approval is not a determination concerning the acceptability of land uses under Federal, state, or local law. Approval does not by itself constitute an FAA implementing action. A request for Federal action or approval to implement specific noise compatibility measures may be required, and an FAA decision on the request may require an environmental assessment of the proposed action. Approval does not constitute a commitment by the FAA to financially assist in the implementation of the program nor a determination that all measures covered by the program are eligible for grant-in-aid funding from the FAA. Where Federal funding is sought, requests for project grants must be submitted to the FAA Airports District Office in Denver, Colorado.

The City of Colorado Springs submitted to the FAA the noise exposure maps, descriptions, and other documentation produced during the noise compatibility planning study conducted at Colorado Springs Municipal Airport. The Colorado Springs Municipal Airport noise exposure maps were determined by FAA to be in compliance with applicable requirements on March 23, 1990. Notice of this determination was published in the **Federal Register** on April 4, 1990.

The Colorado Springs Municipal Airport noise compatibility program contains a proposed noise compatibility program comprised of actions designed for phased implementation by airport management and adjacent jurisdictions from the date of study completion to the year 1993. It was requested that the FAA evaluate and approve this material as a noise compatibility program as described in section 104(b) of the Act. The FAA began its review of the program on March 23, 1990 and was required by a provision of the Act to approve or disapprove the program within 180 days (other than the use of new flight procedures for noise control). Failure to approve or disapprove such program within the 180-day period shall be deemed to be an approval of such program.

The submitted program contained 19 proposed actions for noise mitigation on and off the airport. The FAA completed its review and determined that the procedural and substantive requirements of the Act and FAR 150 have been satisfied. The overall program, therefore, was approved by the Assistant Administrator for Airports effective July 10, 1990.

Outright approval was granted for 17 specific program elements. Program Element A.2 was disapproved because it can not be shown that relocation of the terminal provides any noise mitigation benefit. Program Element A.3 was disapproved because there is no analysis supporting this recommendation as a noise mitigation measure.

These determinations are set forth in detail in a Record of Approval endorsed by the Assistant Administrator for Airports on July 10, 1990. The Record of Approval, as well as other evaluation materials and the documents comprising the submittal, are available for review at the FAA office listed above and at the administrative offices of the Colorado Springs Municipal Airport.

Issued in Seattle, Washington, on July 25, 1990.

Edward G. Tatum,

Manager, Airports Division, Northwest Mountain Region.

[FR Doc. 90–18529 Filed 8–3–90; 8:45 am]

BILLING CODE 4910–13–M

Artisan Liens on Aircraft; Recordability

AGENCY: Federal Aviation Administration (FAA), DOT.

ACTION: Notice.

SUMMARY: This notice of legal opinion is issued by the Assistant Chief Counsel for the Aeronautical Center to provide legal advice to the Aircraft Registration Branch, Mike Monroney Aeronautical Center, Oklahoma City, Oklahoma, also identified as the FAA Aircraft Registry. Since December 17, 1981, the Assistant Chief Counsel for the Aeronautical Center has issued opinions in the **Federal Register** of those states from which artisan liens will be accepted for recordation by the FAA Aircraft

Registry. This opinion is to advise interested parties of the addition of the States of Michigan and Tennessee to that list.

DATED: July 10, 1990.

ADDRESSES: Copies of prior opinions on the recordability of artisan liens from states which have statutes authorizing their recording may be obtained from: Assistant Chief Counsel for the Aeronautical Center, AAC–7, P.O. Box 25082, Oklahoma City, OK 73125–4904.

FOR FURTHER INFORMATION CONTACT: R. Bruce Carter, Office of Assistant Chief Counsel, address above, or by calling (405) 680–3296; (FTS 747–3296).

SUPPLEMENTARY INFORMATION: In the December 17, 1981, **Federal Register**, Vol. 46, No. 242, page 61528, the Federal Aviation Administration, Mike Monroney Aeronautical Center, published its legal opinion on the recordability of artisan liens, with the identification of those states from which artisan liens would be accepted. In the April 23, 1984, **Federal Register**, Vol. 49, No. 79, page 17112, we advised that Florida, Nevada, and New Jersey had passed legislation which, in our opinion, allows the Aircraft Registry to accept artisan liens from those states. In the June 10, 1986, **Federal Register**, Vol. 51, No. 111, page 21046, we advised that Minnesota and New Mexico had passed legislation which, in our opinion, allows the Aircraft Registry to accept artisan liens from those states. In the June 23, 1988, **Federal Register**, Vol. 53, No. 121, page 23716, we advised that Missouri had passed legislation which, in our opinion, allows the Aircraft Registry to accept artisan liens from the state. In the September 19, 1989, **Federal Register**, Vol. 54, No. 180, page 38584, we advised that Texas was identified as a state from which artisan liens will be accepted.

In the December 19, 1989, **Federal Register**, Vol. 54, No. 242, page 51965, we advised that North Dakota was identified as a state from which artisan liens will be accepted.

The purpose of this opinion is to advise interested parties that in addition to those states identified previously, Michigan and Tennessee are identified as states from which artisan liens will be accepted.

The complete list of states from which artisan liens on aircraft will be accepted as of this date are:

Alaska	Nevada
Arkansas	New Jersey
Florida	New Mexico
Georgia	North Dakota
Illinois	Oklahoma
Indiana	Oregon
Kansas	South Carolina
Kentucky	South Dakota
Maine	Tennessee
Michigan	Texas
Minnesota	Virgin Islands
Missouri	Washington
Nebraska	Wyoming

Issued in Oklahoma City, on July 10, 1990.

Joseph R. Standell,

Assistant Chief Counsel for the Aeronautical Center.

DEPARTMENT OF THE TREASURY

Public Information Collection Requirements Submitted to OMB for Review

Dated: July 30, 1990.

The Department of Treasury has submitted the following public information collection requirement(s) to OMB for review and clearance under the Paperwork Reduction Act of 1980, Public Law 96–511. Copies of the submission(s) may be obtained by calling the Treasury Bureau Clearance Officer listed. Comments regarding this information collection should be addressed to the OMB reviewer listed and to the Treasury Department Clearance Officer, Department of the Treasury, Room 3171 Treasury Annex, 1500 Pennsylvania Avenue, NW., Washington, DC 20220.

Internal Revenue Service

OMB Number: 1545–0130

Form Number: IRS Form 1120S, Schedule D (Form 1120S), and Schedule K–1 (Form 1120S)

Type of Review: Revision

Title: U.S. Income Tax Return for an S Corporation (1120S), Capital Gains and Losses and Built-In Gains (Schedule D), Shareholder's Share of Income, Credits, Deductions, etc. (Schedule K–1)

Description: Form 1120S, Schedule D (Form 1120S), and Schedule K–1 (Form 1120S) are used by an S Corporation to figure its tax liability, and income and other tax-related information to pass through its shareholders. Schedule K–1 is used to report to shareholders their share of the corporation's income, deductions, credits, etc. IRS uses the information to determine the correct tax for the S Corporation and its shareholders.

Respondents: Farms, Businesses or other for-profit, Small businesses or organizations

Estimated Number of Respondents/ Recordkeepers: 1,389,600

Estimated Burden Hours Per Respondent/Recordkeeper:

	1120S	Sched. D	Sched. K–1
Recordkeeping	62 hrs., 54 min	7 hrs., 53 min	19 hrs., 8 min.
Learning about the law or the form	19 hrs., 8 min	4 hrs., 31 min	10 hrs., 13 min.
Preparing the form	34 hrs., 57 min	9 hrs., 31 min	14 hrs., 42 min.
Copying, assembling, and sending the form to IRS	4 hrs., 1 min	1 hr., 20 min	1 hr., 4 min.

Frequency of Response: Annually

Estimated Total Reporting/ Recordkeeping Burden: 317,508,396 hours

Clearance Officer: Garrick Shear, (202) 535–4297, Internal Revenue Service, Room 5571, 1111 Constitution Avenue, NW., Washington, DC 20224

OMB Reviewer: Milo Sunderhauf, (202) 395–6880, Office of Management and Budget, Room 3001, New Executive Office Building, Washington, DC 20503.

Lois K. Holland,

Departmental Reports Management Officer.

[FR Doc. 90–18251 Filed 8–3–90; 8:45 am]

BILLING CODE 4832–01–M

Fiscal Service

Federal Tax Deposit Fee Reduction

AGENCY: Financial Management Service, Fiscal Service, Treasury.

ACTION: Notice of intent.

SUMMARY: Notice is hereby given that Treasury plans to eliminate the fees paid to all depositaries that process in excess of $10 million in Federal tax deposit (FTD) payments annually. It is the Department of the Treasury's intent to announce the elimination of fees to the affected financial institutions prior to the effective date of the change and allow them the opportunity to comment. Depositaries in the note option Class B and Class C categories and in the

remittance option Class 1 category will no longer be paid fees to process FTD payments. This fee change will become effective with the Federal Reserve Banks' October reporting cycle which begins October 4, 1990. Participants in the Minority Bank Deposit Program, regardless of classification, will not be affected by the fee change.

DATES: Comments must be received by September 14, 1990.

ADDRESSES: Comments may be mailed to the Treasury Programs Branch, Financial Management Service, U.S. Department of the Treasury, Room 420, Liberty Center, 401 14th Street SW., Washington, DC 20227.

FOR FURTHER INFORMATION CONTACT: Elaine Fleishell on (202) 287–0590.

SUPPLEMENTARY INFORMATION: Treasury procedural instructions found in the "Treasury Financial Manual" on paying fees to financial institutions for maintaining Treasury Tax and Loan (TT&L) accounts and processing FTD payments will be revised to reflect the change. The "Treasury Financial Manual" may be obtained from any Federal Reserve Bank.

Reasons for Treasury's policy concerning FTD payments include: First, budetary constraints effective in Fiscal Year 1991. Second, depositaries that choose to participate in the TT&L Investment Program earn interest on the overnight use of funds deposited as Federal tax payments.

Treasury estimates that the earning capacity of depositaries from the overnight use of FTD funds during Fiscal Year 1989 was approximately $194.4 million. This estimate is based on the FY 1989 FTD dollar volume cited in the "Daily Treasury Statement" dated September 29, 1989. In addition, Treasury estimates that eliminating the fees paid to depositaries which process FTDs in excess of $10 million annually will save the Treasury approximately $18.2 million in Fiscal Year 1991.

The new and any subsequent fee schedules will be published in the "Treasury Financial Manual." Future notice of, and opportunity to comment on, any subsequent reductions in the fees paid to depositaries for processing FTD payments will be provided to the affected financial institutions.

Distribution of the revised "Treasury Financial Manual" to the Federal Reserve Banks and TT&L depositaries will be coordinated with the elimination of the fees.

W. E. Douglas,

Commissioner.

[FR Doc. 90–18300 Filed 8–3–90; 8:45 am]

BILLING CODE 4810–35–M

UNITED STATES INFORMATION AGENCY

Privacy Act of 1974: Republication of Notice of Systems of Records

AGENCY: Office of the General Counsel, United States Information Agency.

ACTION: Republication of Notice of Systems of Records.

SUMMARY: This document republishes in full the USIA Systems of Records maintained under the Privacy Act of 1974. It will up-date and replace the USIA section of Volume V of the **Federal Register's** Privacy Act Issuances, 1987 compilation.

This up-date and replacement was made necessary by extensive changes during the 1980's in the USIA system of office symbols, and a realignment of functions and responsibilities within the Agency.

DATES: Persons wishing to comment on newly published systems may do so by September 5, 1990.

EFFECTIVE DATE: Unless otherwise noted in the **Federal Register**, this notice shall become final on September 5, 1990.

ADDRESSES: Alberto J. Mora, General Counsel, USIA, 301 4th Street SW., Washington, DC 20547.

FOR FURTHER INFORMATION CONTACT: Lola L. Secora, Chief, FOIA/Privacy Act Unit, Office of the General Counsel, USIA, 301 4th Street SW., Rm. M–10, Washington, DC 20547; telephone (202) 619–5499.

Table of Contents

USIA–1. Congressional Liaison—CL.
USIA–2. Director's Secretariat Files—D/SS.
USIA–3. Educational and Cultural Exchange Program—E.
USIA–4. Office of Cultural Centers and Resources—E/C.
USIA–5. Cultural Property Advisory Committee—E/PAC.
USIA–6. Americans Funded by USIA Private Sector Grants—E/PS.
USIA–7. Youth Exchange Staff—E/YX.
USIA–8. Employee Statements of Financial Interest and Confidential Statements of Employment and Financial Interest—GC.
USIA–9. Legal Files—GC.
USIA–10. Recruitment Records—GC.
USIA–11. Privacy Act and Freedom of Information Act Files—GC/FOI.
USIA–12. Locator Cards—M/ASC.
USIA–13. Mailing Lists—M/ASC.
USIA–14. Official Travel Records—M/AST.
USIA–15. Salary Computation Records—M/CB.
USIA–16. Employee Payroll and Retirement System—M/CF.
USIA–17. Records on Shipment of Effects, Unaccompanied Baggage and automobiles—M/CF.
USIA–18. Travel Authorization Obligation File—M/CF.
USIA–19. Equal Employment Opportunity (EEO) Complaint Files—M/E.
USIA–20. Equal Employment Opportunity (EEO) General Files—M/E.
USIA–21. Minority Group Data (MGD)—M/E.
USIA–22. Solicitation Mailing List Application—M/K.
USIA–23. United States Information Agency (USIA) Procurement Personnel Information System—M/K.
USIA–24. Employee Grievance Files—M/PPL.
USIA–25. Recruitment Records—M/P.
USIA–26. Senior Officer Files—M/PPS.
USIA–27. Employment Requests—M/PDS.
USIA–28. Employee Master Personnel Records—M/PDSE.
USIA–29. Retirement and Insurance Records—M/PDSR.
USIA–30. Foreign Service Location File—M/PF.
USIA–31. Foreign Service Selection Board Files—M/PF.
USIA–32. Career Counseling Records—M/PFC.
USIA–33. Officer/Specialist Assignment Requests—M/PFC.
USIA–34. Advisory, Referral and Counseling Records—M/PPS.
USIA–35. Incentive Awards File—M/PPS.
USIA–36. Employee Training Files—M/PT.
USIA–37. Personnel Security and Integrity Records—M/S.
USIA–38. Security Identification Card and Automated Access Control File—M/S.
USIA–39. Criminal Investigative Files of the Inspector General—OIG/V.
USIA–40. Speaker Databank/Name—P/D.
USIA–41. Exhibit Specialist Grantees—P/E.
USIA–42. Guide Training File—P/E.
USIA–43. Photographers and Photographs for Exhibits Use—P/E.
USIA–44. Press Service PhotoFile—P/P.
USIA–45. Press Service Photographer File—P/P.
USIA–46. Service Contributors—P/PF.
USIA–47. Problems of Communism Branch—P/PMP.
USIA–48. Non-Official Personnel Files—PL/USIA.
USIA–49. Senior Officer and Prominent Employee Information—PL/USIA.
USIA–50. Office of Research—R.
USIA–51. Contract Talent and Employee Recruitment Files—TV.
USIA–52. Source File—TV.
USIA–53. Contract Talent Vendor Files—VOA/A.
USIA–54. VOA Director's Executive Secretariat Files—VOA/ES.
USIA–55. Employees Personnel Files—VOA/P.
USIA–56. Americans Residing in Foreign Countries—USIA.
USIA–57. Employee Parking—USIA.
USIA–58. Overseas Personnel Files and Records—USIA.

USIA–1

SYSTEM NAME:

Congressional Liaison-CL.

SYSTEM LOCATION:

Office of Congressional Liaison, United States Information Agency (USIA), 301 4th Street SW., Washington, DC 20547.

SECURITY CLASSIFICATION:

None for the system. However, portions of the records are classified at the level of confidential and secret.

CATEGORIES OF INDIVIDUALS COVERED BY THE SYSTEM:

Current and former Members of Congress.

CATEGORIES OF RECORDS IN THE SYSTEM:

Incoming and outgoing correspondence to Members of Congress, including requests for information and referral of job applicants by Members. Also included are Agency records, cables and memorandums dealing with individual Members and their involvement in Agency programs.

AUTHORITY FOR MAINTENANCE OF THE SYSTEM:

Federal Records Act of 1950, as amended, 44 U.S.C. 3101.

ROUTINE USES OF RECORDS MAINTAINED IN THE SYSTEM, INCLUDING CATEGORIES OF USERS AND THE PURPOSES OF SUCH USES:

Reference file for oversight of Congressional reports. Also see Prefatory Statement of General Routine Uses. Information is made available on a need-to-know basis to personnel of the U.S. Information Agency, but records may be released to other government agencies who have statutory or other lawful authority to maintain such information.

POLICIES AND PRACTICES FOR STORING, RETRIEVING, ACCESSING, RETAINING, AND DISPOSING OF RECORDS IN THE SYSTEM:

STORAGE:

Paper records in file folders and data base storage in mainframe computer system.

RETRIEVABILITY:

Indexed alphabetically by individual name.

SAFEGUARDS:

Maintained in bar-lock file cabinets and data base access is password controlled at several levels of access by authorized personnel as determined by the Director of USIA.

RETENTION AND DISPOSAL:

Records are kept in active status as long as the individual is a Member of Congress or the files are of active interest. Thereafter, the records become inactive but are still maintained.

SYSTEM MANAGER AND ADDRESS:

Director, Congressional Liaison, USIA, 301 4th Street SW., Washington, DC 20547.

NOTIFICATION PROCEDURE:

Director, Congressional Liaison, USIA, 301 4th Street SW., Washington, DC 20547.

RECORD ACCESS PROCEDURE:

Requests from individuals should be addressed to: Director, FOIA/Privacy Act Unit, Office of the General Counsel, United States Information Agency, 301 4th Street SW., Washington, DC 20547.

To request another individual's file the requester must have a notarized signed statement from the individual to whom the file pertains.

CONTESTING RECORD PROCEDURE:

The Agency's rules for access and for contesting contents and appealing determinations by the individual concerned appear in 22 CFR part 505.

RECORD SOURCE CATEGORIES:

Communications from Members of Congress and copies of responses generated by various Agency personnel.

SYSTEMS EXEMPTED FROM CERTAIN PROVISIONS OF THE ACT:

Not applicable.

USIA-2

SYSTEM NAME:

Director's Secretariat Staff Files—D/SS.

SYSTEM LOCATION:

Executive Secretariat, United States Information Agency (USIA), 301 4th Street SW., Washington, DC 20547.

SECURITY CLASSIFICATION:

Some documents may be classified confidential, secret and top secret.

CATEGORIES OF INDIVIDUALS COVERED BY THE SYSTEM:

Members of the White House Staff, Members of Congress, heads of other executive agencies of the Federal Government, Federal Judges and members of the general public.

CATEGORIES OF RECORDS IN THE SYSTEM:

Correspondence addressed to the Director of USIA, and copies of responses to requests for reports, information and/or assistance of various kinds prepared by the Director or her/his designated representative.

AUTHORITY FOR MAINTENANCE OF THE SYSTEM:

The Federal Records Act of 1950, as amended, 44 U.S.C. 3101–3107; Records Disposal Act of 1943, as amended, 44 U.S.C. 3301–3314.

ROUTINE USES OF RECORDS MAINTAINED IN THE SYSTEM, INCLUDING CATEGORIES OF USERS AND THE PURPOSES OF SUCH USES:

Reference file to provide oversight of the flow of requests to the USIA Director for reports, information and/or assistance of various kinds' and to monitor the accomplishment of responses to such requests. Also see Prefatory Statement of General Routine Uses. Information is made available on a need-to-know basis to personnel of the USIA as may be required in the performance of their official duties. The information may also be released to other government agencies who have statutory or other lawful authority to maintain such information.

POLICIES AND PRACTICES FOR STORING, RETRIEVING, ACCESSING, RETAINING, AND DISPOSING OF RECORDS IN THE SYSTEM:

STORAGE:

Records are stored in a computer maintained by and located within the USIA and maintained as paper records in file folders in USIA.

RETRIEVABILITY:

Records are cross-indexed by individual names, titles, agencies and by computer reference number.

SAFEGUARDS:

Computer records are accessible only to authorized employees of the USIA or the Department of State. Paper records are kept in locked file cabinets.

RETENTION AND DISPOSAL:

Records are maintained indefinitely.

SYSTEM MANAGER AND ADDRESS:

Executive Secretary, USIA, 301 4th Street SW., Washington, DC 20547.

NOTIFICATION PROCEDURE:

Executive Secretary, USIA, 301 4th Street SW., Washington, DC 20547.

RECORD ACCESS PROCEDURE:

Requests from individuals should be addressed to the Director, FOIA/Privacy Act Unit, Office of the General Counsel, USIA, 301 4th Street SW., Washington, DC 20547.

To request another individual's file the requester must have a notarized signed statement from the individual to whom the file pertains.

CONTESTING RECORD PROCEDURES:

The Agency's rules for access and for contesting contents and appealing determinations by the individual concerned appear in 22 CFR part 505.

RECORD SOURCE CATEGORIES:

Unsolicited correspondence from U.S. Government officials and members of the general public addressed to the Director of USIA.

SYSTEMS EXEMPTED FROM CERTAIN PROVISIONS OF THE ACT:

Certain records contained within this system of records may be exempted from 5 U.S.C. 552a(c)(3), (d), (e)(1), (e)(4)(G), (H) and (f). See 22 CFR, Chapter V, § 505.15.

USIA-3

SYSTEM NAME:

Educational and Cultural Exchange Program—E

SYSTEM LOCATION:

Bureau of Educational and Cultural Affairs, United States Information Agency (USIA), 301 4th Street SW., Washington, DC 20547.

SECURITY CLASSIFICATION:

Confidential.

CATEGORIES OF INDIVIDUALS COVERED BY THE SYSTEM:

Applicants, recipients, and prospective recipients of Educational and Cultural Exchange grants; members of the Board of Foreign Scholarships; American Executive Secretaries of Fulbright Foundations and Comnissions; individuals who may be asked to participate in educational advising workshops.

CATEGORIES OF RECORDS IN THE SYSTEM:

Biographic information; project descriptions; evaluations of the performances of former grantees; evaluations of performing artists who may be potential grantees; copies of press releases; news clippings; information related to the grant; related correspondence; academic transcripts; letters of reference.

AUTHORITY FOR MAINTENANCE OF THE SYSTEM:

Mutual Educational and Cultural Exchange Act of 1961; 22 U.S.C. 2451–58; 22 U.S.C. 2054–57; 22 U.S.C. 1431.

ROUTINE USES OF RECORDS MAINTAINED IN THE SYSTEM, INCLUDING CATEGORIES OF USERS AND THE PURPOSES OF SUCH USES:

The primary function of the Educational and Cultural Exchange Program records is the aiding in the selection of individuals for educational and cultural exchange grants and for the administration of such grants. Information from these records is also used to develop statistics for use in the operation of the exchange program. The principal users of this information outside USIA are: Office of Personnel Management; Congress; the news media; relative of the grantee trying to reach the individual for bona fide personal reasons; the grantee. In connection with the selection process, information may be released to Binational Commissions; the Board of Foreign Scholarships; foreign host institutions; contract agencies. Fulbright-Hays alumni names and addresses may be made available to American institutions, organizations or individuals assisting in the organizing and functioning of an association of alumni of the exchange program. Excerpts from the files may be used by non-governmental panels of experts in rating candidates. This information may also be released to other government agencies having statutory or other lawful authority to maintain such information.

Also see Prefatory Statement of General Routine Uses.

POLICIES AND PRACTICES FOR STORING, RETRIEVING, ACCESSING, RETAINING, AND DISPOSING OF RECORDS IN THE SYSTEM:

STORAGE:

Hard copy; magnetic computer media.

RETRIEVABILITY:

By name of the individual.

SAFEGUARDS:

Records are maintained in secured file cabinets or in restricted areas, access to which is limited to authorized personnel.

RETENTION AND DISPOSAL:

Retention of these records varies from 3 years to an indefinite period of time, depending upon the specific kind of record involved. Records of non-recommended candidates are only maintained for up to 12 months after submission of the application. They are retired or destroyed in accordance with published schedules of the USIA.

SYSTEM MANAGER AND ADDRESS:

Associate Director, Bureau of Educational and Cultural Affairs, USIA, 301 4th Street SW., Washington, DC 20547.

NOTIFICATION PROCEDURE:

Associate Director, Bureau of Educational and Cultural Affairs, USIA, 301 4th Street SW., Washington, DC 20547.

RECORD ACCESS PROCEDURE:

Requests from individuals should be addressed to: Director, FOIA/Privacy Act Unit, Office of the General Counsel, USIA, 301 4th Street SW., Washington, DC 20547.

To request another individual's file the requester must have a notarized signed statement from the individual to whom the file pertains.

CONTESTING RECORD PROCEDURES:

The Agency's rules for access and for contesting contents and appealing determinations by the individual concerned appear in 22 CFR part 505.

RECORD SOURCE CATEGORIES:

The individual; public reference; other offices within the other government agencies; other public and professional institutions possessing relevant information.

SYSTEMS EXEMPTED FROM CERTAIN PROVISIONS OF THE ACT:

Certain records contained within this system of records are exempted from 5 U.S.C. 552a (c)(3), (d), (e)(1), (e)(4)(G), (H), (I), and (f).

USIA-4

SYSTEM NAME:

Office of Cultural Centers and Resources—E/C.

SYSTEM LOCATION:

Office of Cultural Centers and Resources, United States Information Agency (USIA), 301 4th Street SW., Washington, DC 20547.

SECURITY CLASSIFICATION:

None.

CATEGORIES OF INDIVIDUALS COVERED BY THE SYSTEM:

American Scholars and experts who may be used as consultants or specialists in American studies domestically or overseas; applicants for employment, contracts or grants with regard to USIA's Library Program and Library Fellows; applicants for employment, contracts or grants with regard to English Teaching Program and English Teaching Fellow Program; other applicants for employment, contracts or grants with regard to specific positions in overseas cultural operations.

CATEGORIES OF RECORDS IN THE SYSTEM:

Biographic data on American scholars provided by the individuals themselves upon request; biographic data on applicants for employment, contracts and grants including previous employment, education, recommendations and security clearance status; library field reports, comments and evaluation on library visits written by Public Affairs Officers, and letters of correspondence between supervisors and librarians.

AUTHORITY FOR MAINTENANCE OF THE SYSTEM:

Executivc Order 11034, as amended.

ROUTINE USES OF RECORDS MAINTAINED IN THE SYSTEM, INCLUDING CATEGORIES OF USERS AND THE PURPOSES OF SUCH USES:

Screening of applicants for employment, contracts or grants, for appraisal by Agency's geographic area offices and Public Affairs Officers located overseas; evaluation by Library Program Staff of candidates for librarian positions; to develop work requirements for regional librarians; evaluation by English Language Programs staff to identify scholars with skills related to academic projects.

Also see Prefatory Statement of General Routine Uses.

Information is made available on a need-to-know basis to personnel of the USIA as may be required in the performance of their official duties.

The principal user of this information outside the USIA is the U.S. Department of State.

Information in these records may be released to other government agencies who have statutory or other lawful authority to maintain such information.

POLICIES AND PRACTICES FOR STORING, RETRIEVING, ACCESSING, RETAINING, AND DISPOSING OF RECORDS IN THE SYSTEM:

STORAGE:

Paper records in file folders.

RETRIEVABILITY:

By name of the individual.

SAFEGUARDS:

Maintained in locked file cabinets.

RETENTION AND DISPOSAL:

Files retained as long as they are of active interest or the individual is employed. Inactive files destroyed by burning.

SYSTEM MANAGER AND ADDRESS:

Director, Office of Cultural Centers and Resources, USIA, 301 4th Street SW., Washington, DC 20547.

NOTIFICATION PROCEDURE:

Director, Office of Cultural Centers and Resources, USIA, 301 4th Street SW., Washington, DC 20547.

RECORD ACCESS PROCEDURE:

Requests from individuals should be addressed to: Director, FOIA/Privacy Act Unit, Office of the General Counsel, USIA, 301 4th Street SW., Washington, DC 20547.

To request another individual's file the requester must have a notarized signed statement from the individual to whom the file pertains.

CONTESTING RECORD PROCEDURES:

The Agency's rules for access and for contesting contents and appealing determinations by the individual concerned appear in 22 CFR part 505.

RECORD SOURCE CATEGORIES:

Records on American Scholars provided by applicants; records on all other applicants are submitted to the Agency or authorized by the applicants.

SYSTEMS EXEMPTED FROM CERTAIN PROVISIONS OF THE ACT:

Not applicable.

USIA-5

SYSTEM NAME:

Cultural Property Advisory Committee—E/PAC.

SYSTEM LOCATION:

Cultural Property Advisory Committee, United States Information Agency (USIA), 301 4th Street SW., Washington, DC 20547.

SECURITY CLASSIFICATION:

None.

CATEGORIES OF INDIVIDUALS COVERED BY THE SYSTEM:

Current and former members of the Cultural Property Advisory Committee. The Committee is comprised of experts in the international sale of cultural property; experts in archaeology, anthropology, ethnology or related fields; representatives of museums; and representatives of the general public. They are private citizens appointed by the President to three year terms.

CATEGORIES OF RECORDS IN THE SYSTEM:

Personnel, correspondence, travel. Incorporated therein are curriculum vitae, correspondence between staff and members of the Committee, travel and other documents generated during the members' service on the Committee. Some documents are duplicated by other agency elements, some are not.

AUTHORITY FOR MAINTENANCE OF THE SYSTEM:

Federal Records Act of 1950, as amended, 44 U.S.C. 3101.

ROUTINE USES OF RECORDS MAINTAINED IN THE SYSTEM, INCLUDING CATEGORIES OF USERS AND THE PURPOSES OF SUCH USES:

The information relating to Committee members in this system is used by the Committee staff. Also, records may be used, on a need to know basis, by USIA's administrative, personnel and security offices; and, by the Director of USIA who may wish to make recommendations to White House Personnel regarding appointments to the Committee.

POLICIES AND PRACTICES FOR STORING, RETRIEVING, ACCESSING, RETAINING, AND DISPOSING OF RECORDS IN THE SYSTEM:

STORAGE:

Information is stored in file folders under individuals' names.

RETRIEVABILITY:

Records are indexed alphabetically by individual name under three separate categories: personnel, correspondence and travel.

SAFEGUARDS:

Records are maintained in bar-lock file cabinets.

RETENTION AND DISPOSAL:

Records are kept in active status as long as the Committee member serves. Thereafter, the records become inactive but are maintained until they are disposed of in accordance with the USIA disposition schedules.

SYSTEM MANAGER AND ADDRESS:

Executive Director, Cultural Property Advisory Committee (E/PAC), USIA, 301 4th Street SW., Washington, DC 20547.

NOTIFICATION PROCEDURE:

Executive Director, Cultural Property Advisory Committee (E/PAC), USIA, 301 4th Street SW., Washington, DC 20547.

RECORD ACCESS PROCEDURE:

Requests from individuals should be addressed to: Director, FOIA/Privacy Act Unit, Office of the General Counsel, USIA, 301 4th Street SW., Washington, DC 20547.

To request another individual's file the requester must have a notarized signed statement from the individual to whom the file pertains.

CONTESTING RECORD PROCEDURE:

The Agency's rules for access and for contesting contents and appealing determinations by the individual concerned appear in 22 CFR part 505.

RECORD SOURCE CATEGORIES:

Some information is obtained from individual Committee members, some is staff/Agency generated, and some is obtained from the White House.

SYSTEMS EXEMPTED FROM CERTAIN PROVISIONS OF THE ACT:

Not applicable.

USIA-6

SYSTEM NAME:

Americans Funded by USIA Private Sector Grants—E/PS

SYSTEM LOCATION:

Office of Private Sector Programs, United States Information Agency (USIA, 301 4th Street SW., Washington, DC 20547.

SECURITY CLASSIFICATION:

None.

CATEGORIES OF INDIVIDUALS COVERED BY THE SYSTEM:

Individuals who have traveled at U.S. Government expense under USIA Private Sector grants in the performance of grant requirements and biographic information on individuals nominated for the Agency's Artistic Ambassador Program from eligible graduate music schools and conservatories in the United States.

CATEGORIES OF RECORDS IN THE SYSTEM:

Name, position, organizational affiliation, grantee organization, grant number, date, destination, purpose of travel; biographic data where nominee will perform, nominee's repertoire, past concerts and performances, address, telephone number, education, date and place of birth and citizenship.

AUTHORITY FOR MAINTENANCE OF THE SYSTEM:

The USIA Authorization Act, Fiscal Years 1984 and 1985, Pub. L. 98–164 and the Fulbright-Hays Act (22 U.S.C. 2451, et seq.).

ROUTINE USES OF RECORDS MAINTAINED IN THE SYSTEM, INCLUDING CATEGORIES OF USERS AND THE PURPOSES OF SUCH USES:

The information relating to American Travelers in this system will be used to compile an annual report for the Speaker of the House of Representatives and the Chairman of the Senate Foreign Relations Committee as required by Pub. L. 98–164. This file has no other use. Users of this file will be employees of the USIA Office of Private Sector Programs having a need to access the information.

The Artistic Ambassador Program file will be used by employees of the USIA Office of Private Sector Programs in performance of their duties and by judges to record information on the technical and artistic ability of the artist, which information is ultimately used in selecting winners of competition.

Also see Prefatory Statement of General Routine Uses.

POLICIES AND PRACTICES FOR STORING, RETRIEVING, ACCESSING, RETAINING, AND DISPOSING OF RECORDS IN THE SYSTEM:

STORAGE:

Information will be maintained in a word processor on list processing with limited access and in file folders under individual names.

RETRIEVABILITY:

Records are retrieved by name and organizational affiliation.

SAFEGUARDS:

Records of American travelers are maintained on a word processor located in the USIA Office of Private Sector Programs and are password protected so that the file can only be accessed by employees having a need to obtain information which is available only in the file.

RETENTION AND DISPOSAL:

Files will be retained for a minimum of 5 years but no longer than 7 years, at which time they will be disposed of in accordance with the USIA Disposition Schedule.

SYSTEM MANAGER AND ADDRESS:

Chief, Private Sector Programs Division (E/PS), USIA, 301 4th Street SW., Washington, DC 20547.

NOTIFICATION PROCEDURE:

Chief, Private Sector Programs Division (E/PS), USIA, 301 4th Street SW., Washington, DC 20547.

RECORD ACCESS PROCEDURE:

Requests from individuals should be addressed to: Director, FOIA/Privacy Act Unit, Office of the General Counsel, USIA, 301 4th Street SW., Washington, DC 20547.

To request another individual's file the requester must have a notarized signed statement from the individual to whom the file pertains.

CONTESTING RECORD PROCEDURES:

The Agency's rules for access and for contesting contents and appealing determinations by the individual concerned appear in 22 CFR part 505.

RECORD SOURCE CATEGORIES:

Information obtained from grantee organizations and individual grantee.

SYSTEMS EXEMPTED FROM CERTAIN PROVISIONS OF THE ACT:

Not applicable.

USIA–7

SYSTEM NAME:

Youth Exchange Staff—E/YX.

SYSTEM LOCATION:

Youth Exchange Program, United States Information Agency (USIA), 301 4th Street SW., Washington, DC 20547.

SECURITY CLASSIFICATION:

None for the system. However, a portion of the records are classified at the level of confidential.

CATEGORIES OF INDIVIDUALS COVERED BY THE SYSTEM:

Private citizens and organizations involved in international programming for young people.

CATEGORIES OF RECORDS IN THE SYSTEM:

Correspondence and documentation relating to grant-funded projects; information on youth exchange and youth-service organizations and program agencies; historical files on the Youth Exchange Program.

AUTHORITY FOR MAINTENANCE OF THE SYSTEM:

Federal Records Act of 1950, as amended, 44 U.S.C. 3101.

ROUTINE USES OF RECORDS MAINTAINED IN THE SYSTEM, INCLUDING CATEGORIES OF USERS AND THE PURPOSES OF SUCH USES:

Reference for management of grant-funded projects and for audit purposes, mailing of announcements on Youth Exchange Program initiatives, and responding to requests for information from USIS posts.

Information is made available on a need-to-know basis to personnel of the USIA, but records may be released to other government agencies who have statutory or other lawful authority to maintain such information.

Also see Prefatory Statement of General Routine Uses.

POLICIES AND PRACTICES FOR STORING, RETRIEVING, ACCESSING, RETAINING, AND DISPOSING OF RECORDS IN THE SYSTEM:

STORAGE:

Paper records are stored in file folders; certain E/YX-originated documents are stored on magnetic disks.

RETRIEVABILITY:

Grant files and correspondence are stored alphabetically and by fiscal year.

SAFEGUARDS:

Maintained in bar-locked file cabinets. Retrieval from magnetic disks is limited to personnel with access codes to the Wang system.

RETENTION AND DISPOSAL:

Grant records are kept in active status for three years and then are retired. General information files are retained indefinitely.

SYSTEM MANAGER AND ADDRESS:

Director, Youth Exchange Staff, USIA, 301 4th Street SW., Washington, DC 20547.

NOTIFICATION PROCEDURES:

Director, Youth Exchange Staff, USIA, 301 4th Street SW., Washington, DC 20547.

RECORD ACCESS PROCEDURE:

Requests from individuals should be addressed to: Director, FOIA/Privacy Act Unit, Office of the General Counsel, USIA, 301 4th Street SW, Washington, DC 20547.

To request another individual's file the requester must have a notarized signed statement from the individual to whom the file pertains.

CONTESTING RECORD PROCEDURE:

The Agency's rules for access and for contesting contents and appealing determinations by the individual concerned appear in 22 CFR part 505.

RECORD SOURCE CATEGORIES:

Communications from private organizations and copies of responses generated by E/YX personnel.

SYSTEMS EXEMPTED FROM CERTAIN PROVISIONS OF THE ACT:

Not applicable.

USIA-8

SYSTEM NAME:

Employee Statements of Financial Interest and Confidential Statements of Employment and Financial Interest—GC.

SYSTEM LOCATION:

Office of the General Counsel, United States Information Agency (USIA), 301 4th Street SW., Washington, DC 20547.

SECURITY CLASSIFICATION:

None for the system. However, some documents may be classified confidential.

CATEGORIES OF INDIVIDUALS COVERED BY THE SYSTEM:

Experts or consultants, employees paid at the Executive Schedule level; employees classified at GS–13, and the Foreign Service Equivalent or above, who are in positions of responsibility for a government decision or taking a government action in regard to: (1) Contracting or procurement; (2) administering or monitoring grants or subsidies; (3) regulating or auditing private or other non-Federal enterprise; or (4) required to report employment and financial interest in order to avoid possible conflicts of interest.

CATEGORIES OF RECORDS IN THE SYSTEM:

Statements of personal and family shareholdings and other interest in business enterprises; copies of blind trust and other agreements pertaining to such interests; correspondence as to insulation of control or conflicts of interests; opinions of counsel, including recommendations on waivers.

AUTHORITY FOR MAINTENANCE OF THE SYSTEM:

Executive Order (E.O.) 11222; 5 U.S.C. 7301; 18 U.S.C. 208; Ethics In Government Act of 1948, as amended.

ROUTINE USES OF RECORDS MAINTAINED IN THE SYSTEM, INCLUDING CATEGORIES OF USERS AND THE PURPOSES OF SUCH USES:

Review by Assistant General Counsel for possible conflict of interest. Provide necessary reference information should allegations of conflict of interest arise. Also see Prefatory Statement of General Routine Uses.

Information is made available on a need to know basis to personnel of the USIA as may be required in the performance of their official duties.

Information in Confidential Statements of Employment and Financial Interest is not normally made available to individuals or agencies outside USIA, but records may be released to other government agencies who have statutory or other lawful authority to maintain such information. Information in Statements of Financial Interest is generally subject to public disclosure.

POLICIES AND PRACTICES FOR STORING, RETRIEVING, ACCESSING, RETAINING, AND DISPOSING OF RECORDS IN THE SYSTEM:

STORAGE:

Paper records in file folders.

RETRIEVABILITY:

Alphabetically by name and by Agency element or geographic area.

SAFEGUARDS:

Maintained in bar-lock cabinets.

POLICIES AND PRACTICES FOR STORING; RETRIEVING, ACCESSING, RETAINING, AND DISPOSING OF RECORDS IN THE SYSTEM:

Disposed of six years after employee leaves a position in which a statement is required.

SYSTEM MANAGER AND ADDRESS:

General Counsel, USIA, 301 4th Street SW., Washington, DC 20547.

NOTIFICATION PROCEDURE:

General Counsel, USIA, 301 4th Street SW., Washington, DC 20547.

RECORD ACCESS PROCEDURE:

Requests from individuals should be addressed to: Director, FOIA/Privacy Act Unit, Office of the General Counsel, USIA, 301 4th Street SW., Washington, DC 20547.

To request another individual's Confidential Statement, the requester must have a notarized signed statement from the individual to whom the file pertains.

CONTESTING RECORD PROCEDURES:

The Agency's rules for access and for contesting contents and appealing determinations by the individual concerned appear in 22 CFR part 505.

RECORD SOURCE CATEGORIES:

From the individual who filed the statement.

SYSTEMS EXEMPTED FROM CERTAIN PROVISIONS OF THE ACT:

Not applicable.

USIA-9

SYSTEM NAME:

Legal Files—GC.

SYSTEM LOCATION:

United States Information Agency (USIA), Office of the General Counsel, 301 4th Street SW., Washington, DC 20547.

SECURITY CLASSIFICATION:

None for the system. However, some documents may be classified confidential.

CATEGORIES OF INDIVIDUALS COVERED BY THE SYSTEM:

Individuals who have filed grievances or discrimination complaints; employees separated or considered for separation for cause; officers selected out; individuals taking legal action against the Agency or its employees; tort claimants and accident victims; employees and related persons for whom legislative action is sought; personal property loss claimants; employees and applicants raising legal issues concerning rights or benefits.

CATEGORIES OF RECORDS IN THE SYSTEM:

Investigatory reports; litigation reports; pre-hearing and trial prefatory material; evidence for discovery and submission to hearing officers or courts; pleadings, briefs, transcripts, decisions and other related documents.

AUTHORITY FOR MAINTENANCE OF THE SYSTEM:

The Federal Records Act, as amended, 44 U.S.C. 3101.

ROUTINE USES OF RECORDS MAINTAINED IN THE SYSTEM, INCLUDING CATEGORIES OF USERS AND THE PURPOSES OF SUCH USES:

To represent the Agency in claims and other actions; to issue legal opinions or determinations on further Agency

action. Also see Prefatory Statement of General Routine Uses.

Information is made available on a need-to-know basis to personnel of the USIA as may be required in the performance of their official duties.

The principal users of this information outside the Agency are the Department of Justice, Department of State, Office of Personnel Management, Foreign Service Grievance Board and the Employee Management Relations Committee.

Records contained in these files may be released to agencies outside the USIA who have statutory or other lawful authority to maintain such information.

POLICIES AND PRACTICES FOR STORING, RETRIEVING, ACCESSING, RETAINING, AND DISPOSING OF RECORDS IN THE SYSTEM:

STORAGE:

Paper records in file folders.

RETRIEVABILITY:

By the name of the individual and the nature of the legal action.

SAFEGUARDS:

Maintained in locked file cabinets.

RETENTION AND DISPOSAL:

Records may be retained indefinitely or disposed of when no longer useful or current.

SYSTEM MANAGER AND ADDRESS:

General Counsel, USIA, 301 4th Street SW., Washington, DC 20547.

NOTIFICATION PROCEDURE:

General Counsel, USIA, 301 4th Street SW., Washington, DC 20547.

RECORD ACCESS PROCEDURE:

Requests from individuals should be addressed to: Director, FOIA/Privacy Act Unit, Office of the General Counsel, USIA, 301 4th Street SW., Washington, DC 20547.

To request another individual's file the requester must have a notarized signed statement from the individual to whom the file pertains.

CONTESTING RECORD PROCEDURES:

The Agency's rules for access and for contesting contents and appealing determinations by the individual concerned appear in 22 CFR part 505.

RECORD SOURCE CATEGORIES:

Information provided by the individual and their attorneys or representatives, and by employees of the Agency; information produced in the processing of a claim, grievance, legal action or issue.

SYSTEMS EXEMPTED FROM CERTAIN PROVISIONS OF THE ACT:

Pursuant to 5 U.S.C. 552a (k)(2) and (k)(5), all investigatory material in the record which meets the criteria of these subsections is exempted from the notice, access and contest requirements (under 5 U.S.C. 552a(c)(3), (d)(e)(1), (e)(4)(G), (H) and (I) and (f) of the Agency regulations) in order for the Agency's legal staff to properly perform its functions. See also 22 CFR 505.15.

USIA-10

SYSTEM NAME:

Recruitment Records—GC.

SYSTEM LOCATION:

Office of the General Counsel, United States Information Agency (USIA , 301 4th Street SW., Washington, DC, 20547.

SECURITY CLASSIFICATION:

None.

CATEGORIES OF INDIVIDUALS COVERED BY THE SYSTEM:

Applicants for legal and summer intern positions.

CATEGORIES OF RECORDS IN THE SYSTEM:

Inquiries from attorneys and law students seeking employment with the Office of the General Counsel, resumes and responses to inquiries.

AUTHORITY FOR MAINTENANCE OF THE SYSTEM:

Federal Records Act of 1950, as amended, 44 U.S.C. 3101.

ROUTINE USES OF RECORDS MAINTAINED IN THE SYSTEM, INCLUDING CATEGORIES OF USERS AND THE PURPOSES OF SUCH USES:

For reference and screening of candidates for vacancies on the Agency's legal staff.

Also see Prefatory Statement of General Routine Uses.

Information is made available on a need-to-know basis to personnel of the U.S. Information Agency, as may be required in the performance of their official duties.

Information in these records is not normally made available to individuals or agencies outside the USIA, although it may be released to other agencies who have statutory or other lawful authority to maintain such information.

POLICIES AND PRACTICES FOR STORING, RETRIEVING, ACCESSING, RETAINING, AND DISPOSING OF RECORDS IN THE SYSTEM:

STORAGE:

Paper records in the file folders.

RETRIEVABILITY:

Filed alphabetically by name.

SAFEGUARDS:

Maintained in locked file cabinets.

RETENTION AND DISPOSAL:

Records are kept one year and then destroyed.

SYSTEM MANAGER AND ADDRESS:

Office of the General Counsel, USIA, 301 4th Street SW., Washington, DC 20547.

NOTIFICATION PROCEDURE:

Office of the General Counsel, USIA, 301 4th Street SW., Washington, DC 20547.

RECORD ACCESS PROCEDURES:

Requests from individuals should be addressed to the Director, FOIA/Privacy Act Unit, USIA, 301 4th Street SW., Washington, DC 20547.

CONTESTING RECORD PROCEDURES:

The Agency's rules for access and for contesting contents and appealing determinations by the individual concerned appear in 22 CFR part 505.

RECORD SOURCE CATEGORIES:

Unsolicited inquiries and job applications received from individuals who are seeking employment with USIA's legal staff.

SYSTEMS EXEMPTED FROM CERTAIN PROVISIONS OF THE ACT:

Not applicable.

USIA—11

SYSTEM NAME:

Privacy Act and Freedom of Information Act Files—GC/FOI.

SYSTEM LOCATION:

Office of the General Counsel, FOIA/PA Unit, United States Information Agency (USIA), 301 4th Street SW., Washington, DC 20547.

SECURITY CLASSIFICATION:

Some documents may be classified Confidential, Secret and Top Secret.

CATEGORIES OF INDIVIDUALS COVERED BY THE SYSTEM:

Individuals who have requested documents, records or other information concerning themselves from the Agency pursuant to the Privacy Act of 1974 (5 U.S.C. 552a) and the Freedom of Information Act (5 U.S.C. 552).

CATEGORIES OF RECORDS IN THE SYSTEM:

Personal information that may be contained in reports, memoranda, letters, or any other official or unofficial documents that are relevant to the requests.

AUTHORITY FOR MAINTENANCE OF THE SYSTEM:

5 U.S.C. 552a and 5 U.S.C. 552.

ROUTINE USES OF RECORDS MAINTAINED IN THE SYSTEM, INCLUDING CATEGORIES OF USERS AND THE PURPOSES OF SUCH USES:

For processing of requests received pursuant to the Privacy Act and the Freedom of Information Act.

Also see Prefatory Statement of General Routine Uses.

Information is made available on a need-to-know basis to personnel of the United States Information Agency as may be required in the performance of their official duties.

Information in these records is not normally available to individuals or agencies outside the United States Information Agency but records may be released to other government agencies who have statutory or other lawful authority to maintain such information.

POLICIES AND PRACTICES FOR STORING, RETRIEVING, ACCESSING, RETAINING, AND DISPOSING OF RECORDS IN THE SYSTEM:

STORAGE:

Paper records in file folders.

RETRIEVABILITY:

By name of individual or personal identifier.

SAFEGUARDS:

Records are under surveillance by authorized employees during working hours and are stored in combination-lock cabinets and combination-lock file rooms when not in use.

RETENTION AND DISPOSAL:

Retired and destroyed in accordance with record disposition schedules of the United States Information Agency.

SYSTEM MANAGER AND ADDRESS:

Director, FOIA/Privacy Act Unit, Office of the General Counsel, United States Information Agency, 301 4th Street SW., Washington, DC 20547.

NOTIFICATION PROCEDURE:

Director, FOIA/Privacy Act Unit, Office of the General Counsel, United States Information Agency, 301 4th Street SW., Washington, DC. 20547.

RECORD ACCESS PROCEDURE:

Requests from individuals should be addressed to: Director, FOIA/Privacy Act Unit, Office of the General Counsel, United States Information Agency, 301 4th Street SW., Washington, DC 20547. To request another individual's file the requester must have a notarized signed statement from the individual to whom the file pertains.

CONTESTING RECORD PROCEDURES:

The right to contest records is limited to information which is incomplete, irrelevant, incorrect or untimely. An individual may contact the following official in order to request correction or amendment of the individual's records: Chairperson, Access Appeal Committee, United States Information Agency, Office of Public Liaison, Room 602, 301 4th Street SW., Washington, DC 20547.

RECORD SOURCE CATEGORIES:

Compiled as a result of requests under the Privacy Act and the Freedom of Information Act.

SYSTEMS EXEMPTED FROM CERTAIN PROVISIONS OF THE ACT:

Certain records contained within this system of records may be exempted from 5 U.S.C. 552a (c)(3), (d), (e)(1), (c)(4)(G), (H), and (I), and (f). See 22 CFR 505.15.

USIA-12

SYSTEM NAME:

Locator Cards—M/ASC.

SYSTEM LOCATION:

Domestic Support Division, Administrative Office, United States Information Agency (USIA), 301 4th Street SW., Washington, DC 20547.

SECURITY CLASSIFICATION:

None.

CATEGORIES OF INDIVIDUALS COVERED BY THE SYSTEM:

Past and present domestic employees of USIA.

CATEGORIES OF RECORDS IN THE SYSTEM:

Locator card prepared for each domestic employee, containing the name, social security number, office location, telephone number, home address and telephone number of person to contact in case of emergency.

AUTHORITY FOR MAINTENANCE OF THE SYSTEM:

USIA's Manual of Operations and Administration, Part–II 495.1.

ROUTINE USES OF RECORDS MAINTAINED IN THE SYSTEM, INCLUDING CATEGORIES OF USERS AND THE PURPOSES OF SUCH USES:

To assist USIA elements and others in locating employees; basic input source for telephone directory; also see Prefatory Statement of General Routine Uses.

Information is made available on a need-to-know basis to personnel of the U.S. Information Agency as may be required in the performance of their official duties.

The information may also be released to other government agencies who have statutory or other lawful authority to maintain such information.

POLICIES AND PRACTICES FOR STORING, RETRIEVING, ACCESSING, RETAINING, AND DISPOSING OF RECORDS IN THE SYSTEM:

STORAGE:

Material maintained on index cards.

RETRIEVABILITY:

Filed alphabetically by name, sorted as active and inactive.

SAFEGUARDS:

Card maintained in index card boxes which are locked in bar-lock cabinets after working hours.

RETENTION AND DISPOSAL:

Cards retained for one year after departure of employee and disposed of by shredding.

SYSTEMS MANAGER AND ADDRESS:

Chief, Mail and Telephone Branch, USIA, Room 146, 301 4th Street SW., Washington, DC 20547.

RECORD ACCESS PROCEDURE:

Requests from individuals should be addressed to: Director, FOIA/Privacy Act Unit, Office of the General Counsel, United States Information Agency, Room M–10, 301 4th Street SW., Washington, DC. 20547.

To request another individual's file, the requester must have a notarized signed statement from the individual to whom the file pertains.

CONTESTING RECORD PROCEDURES:

The Agency's rules for access and for contesting contents and appealing determinations by the individual concerned appear in 22 CFR part 505.

RECORD SOURCE CATEGORIES:

The individual on whom information is maintained.

SYSTEMS EXEMPTED FROM CERTAIN PROVISIONS OF THE ACT:

Not applicable.

USIA-13

SYSTEM NAME:

Mailing Lists—M/ASC.

SYSTEM LOCATION:

Office of Administration, Mail and Telephone Branch, United States Information Agency (USIA), 301 4th Street SW., Washington, DC 20547.

SECURITY CLASSIFICATION:

None.

CATEGORIES OF INDIVIDUALS COVERED BY THE SYSTEM:

USIA/USIS domestic and Foreign Service officers; radio station managers, and technicians, foreign correspondents; American and foreign diplomats; librarians; scholars; Members of Congress; information counselors of other Federal agencies and the military; officers of international organizations; American journalists; newspaper and magazine editors and publishers, public relations officers; musicians; historians.

CATEGORIES OF RECORDS IN THE SYSTEM:

Records contain name, address, occupation, title and profession of individuals who need to have access to, or have requested information concerning: Agency publications, news pictures, reports on current issues and other reports; "messages for overseas distribution; press releases; USIA Manual of Operations and Administration.

AUTHORITY FOR MAINTENANCE OF THE SYSTEM:

Pub. L. 402.

ROUTINE USES OF RECORDS MAINTAINED IN THE SYSTEM, INCLUDING CATEGORIES OF USERS AND THE PURPOSES OF SUCH USES:

Mailing lists are used by Agency elements to distribute printed materials to Agency personnel who need access to such information in the performance of their duties, and to members of the public listed under Categories of Individuals covered by the system as shown above who have requested such information, or who have a professional need and interest in acquiring such information. Also see Prefatory Statement of General Routine Uses.

Information is made available on a need-to-know basis to personnel of the U.S. Information Agency as may be required in the performance of their official duties.

Information in these records is not normally available to individuals or agencies outside the U.S. Information Agency but records may be released to other government agencies who have statutory or other lawful authority to maintain such information.

POLICIES AND PRACTICES FOR STORING, RETRIEVING, ACCESSING, RETAINING, AND DISPOSING OF RECORDS IN THE SYSTEM:

STORAGE:

Computer database.

RETRIEVABILITY:

By code number of the distribution list and the subject matter of the printed material, and then by name arranged alphabetically.

SAFEGUARDS:

Computer Security System.

RETENTION AND DISPOSAL:

Records of database are updated frequently.

SYSTEMS MANAGER AND ADDRESS:

Chief, Mail and Telephone Branch, Room 146, USIA, 301 4th Street SW., Washington, DC 20547.

NOTIFICATION PROCEDURE:

Chief, Mail and Telephone Branch, Room 146, USIA, 301 4th Street SW., Washington, DC 20547.

RECORD ACCESS PROCEDURE:

Requests from individuals should be addressed to: Director, FOIA/Privacy Act Unit, Office of the General Counsel, USIA, 301 4th Street SW., Washington, DC 20547.

To request another individual's file the requester must have a notarized signed statement from the individual to whom the file pertains.

CONTESTING RECORD PROCEDURES:

The Agency's rules for access and for contesting contents and appealing initial determinations by the individual concerned appear in 22 CFR part 505.

RECORD SOURCE CATEGORIES:

From the individual concerned and from public documents such as Congressional and professional directories and journals.

SYSTEMS EXEMPTED FROM CERTAIN PROVISIONS OF THE ACT:

Not applicable.

USIA-14

SYSTEM NAME:

Official Travel Records—M/AST.

SYSTEM LOCATION:

Office of Administration, Travel and Transportation Branch, United States Information Agency (USIA), 301 4th Street SW., Washington, DC 20547.

SECURITY CLASSIFICATION:

None.

CATEGORIES OF INDIVIDUALS COVERED BY THE SYSTEM:

Past and present USIA employees and private citizens who have traveled under Agency auspices.

CATEGORIES OF RECORDS IN THE SYSTEM:

(a) Travel documents and correspondence relating to shipment and storage of personal effects and automobiles, (b) records of active passports and visa requests from foreign embassies, and (c) records of temporary duty travel.

AUTHORITY FOR MAINTENANCE OF THE SYSTEM.

Supplemental Appropriation Act of 1955, Public Law 663, section 1311 (83rd Congress) (31 U.S.C. 200); section 3679 of the Revised Statutes, as amended; Anti-deficiency Act (31 U.S.C. 665).

ROUTINE USE OF RECORDS MAINTAINED IN THE SYSTEM, INCLUDING CATEGORIES OF USERS AND THE PURPOSES OF SUCH TRAVEL:

Used by the staff of the Travel and Transportation Branch (a) to make payments for travel services provided to Agency travellers and the packing and storage or shipment of their household effects and automobiles, (b) to obtain passports and visas for Agency employees and other Agency travelers, and (c) to prepare various reports on Agency travel activities.

Also see Prefatory Statement of General Routine Uses.

Information is made available on a need-to-know basis to personnel of USIA as may be required in the performance of their official duties.

Information in these records is not normally available to individuals or agencies outside USIA, but records may be released to other government agencies who have statutory or other lawful authority to maintain such information.

POLICIES AND PRACTICES FOR STORING, RETRIEVING, ACCESSING, RETAINING, AND DISPOSING OF RECORDS IN THE SYSTEM:

STORAGE:

Paper records maintained in file folders in Lektriever storage file, loose leaf binders, and index cards. Computer files also maintained for the shipment and storage of household effects.

RETRIEVABILITY:

Indexed alphabetically by name.

SAFEGUARDS:

Passports and related material as well as all other classified material are kept in bar-lock cabinets. Other records are kept in unlocked files which are under surveillance of authorized employees during the working day, and by security guards after official working hours.

RETENTION AND DISPOSAL:

Temporary duty travel authorizations are maintained for four years and then sent to a Federal records center. Household effects records are maintained for approximately seven years. Passport records are kept for ten years for Agency employees and five years for other travelers.

SYSTEMS MANAGER AND ADDRESS:

Chief, Travel and Transportation Branch, United States Information Agency, 301 4th Street SW., Washington, DC 20547.

NOTIFICATION PROCEDURE:

Chief, Travel and Transportation Branch, United States Information Agency, 301 4th Street SW., Washington, DC 20547.

RECORD ACCESS PROCEDURE:

Requests from individuals should be addressed to: Director, FOIA/Privacy Act Unit, Office of the General Counsel, United States Information Agency, 301 4th Street SW., Washington, DC 20547.

To request another individual's file the requester must have a notarized signed statement from the individual to whom the file pertains.

CONTESTING RECORD PROCEDURE:

The Agency's rules for access and for contesting contents and appealing determinations by the individual concerned appear in 22 CFR part 505.

RECORD SOURCE CATEGORIES:

Travel request forms initiated by various Agency elements, information regarding personal and household effects obtained from the traveler and from carriers, and passport information received from the Department of State's Passport Office.

SYSTEM EXEMPTED FROM CERTAIN PROVISIONS OF THE ACT:

Not applicable.

USIA-15

SYSTEM NAME:

Salary Computation Records—M/CB.

SYSTEM LOCATION:

Office of the Comptroller, United States Information Agency (USIA), 301 4th Street SW., Washington, DC 20547.

SECURITY CLASSIFICATION:

None.

CATEGORIES OF INDIVIDUALS COVERED BY THE SYSTEM:

Persons employed by the Agency during any past fiscal year, and the current fiscal year.

CATEGORIES OF RECORDS IN THE SYSTEM:

Bi-weekly liquidation abstract data; staffing patterns.

AUTHORITY FOR MAINTENANCE OF THE SYSTEM:

Executive Order 10477 of August 1, 1953; Executive Order 10822 of May 20, 1953, implementing section 2(s) of the Reorganization Plan No. 8 of 1953; Budget-Treasury Regulation No. 1 (revised); The Economy Act (31 U.S.C. 686), section 601; section 3679 of the revised statutes as amended (31 U.S.C. 665).

PURPOSE OF THE SYSTEM:

For the use of the Program Support Branch only, for salary computations for Agency budget purposes.

ROUTINE USE OF RECORDS MAINTAINED IN THE SYSTEM, INCLUDING CATEGORIES OF USERS AND THE PURPOSES OF SUCH USES:

For the use of the Program Support Branch only for salary computations for Agency budget purposes.

Information is made available on a need-to-know basis to personnel of the USIA as may be required in the performance of their official duties.

Information in these records is not normally available to individuals or agencies outside the USIA, but records may be released to other government agencies who have statutory or other lawful authority to maintain such information.

POLICIES AND PRACTICES FOR STORING, RETRIEVING, ACCESSING, RETAINING, AND DISPOSING OF RECORDS IN THE SYSTEM:

STORAGE:

Paper records maintained in files.

RETRIEVABILITY:

By name of individual.

SAFEGUARDS:

1. Authorized users: Accounts analyst and supervisor.

2. Physical Safeguards: Security provided by surveillance of authorized employees during working hours and by security guards after working hours.

3. Procedural (or technical) safeguards: Access to records is strictly limited to those staff members who have a need-to-know.

4. Implementation guidelines: USIA Manual of Operations.

RETENTION AND DISPOSAL:

Retained until no longer needed.

SYSTEM MANAGER AND ADDRESS:

Chief, Program Support Branch, Budget Operations Division, USIA, 301 4th Street SW., Washington, DC 20547.

NOTIFICATION PROCEDURE:

Chief, Program Support Branch, Budget Operations Division, USIA, 301 4th Street SW., Washington, DC 20547.

RECORD ACCESS PROCEDURE:

Requests from individuals should be addressed to: Director, FOIA/Privacy Act Unit, Office of the General Counsel, USIA, 301 4th Street SW., Washington, DC 20547.

To request another individual's file the requester must have a notarized signed statement from the individual to whom the file pertains.

CONTESTING RECORD PROCEDURES:

The Agency's rules for access and for contesting contents and appealing determinations by the individual concerned appear in 22 CFR part 505.

RECORD SOURCE CATEGORIES:

Office of Personnel Services; Agency's Payroll Department.

SYSTEM EXEMPTED FROM CERTAIN PROVISIONS OF THE ACT:

Not applicable.

USIA-16

SYSTEM NAME:

Employee Payroll and Retirement System—M/CF.

SYSTEM LOCATION:

Office of the Comptroller, United States Information Agency (USIA), 301 4th Street SW., Washington, DC 20547.

SECURITY CLASSIFICATION:

None.

CATEGORIES OF INDIVIDUALS COVERED BY THE SYSTEM:

Employees currently on Agency rolls (payroll); all employees on Agency rolls (retirement).

CATEGORIES OF RECORDS IN THE SYSTEM:

Civil Service Retirement System, Foreign Service Retirement and Disability System, Federal Employees Retirement System (FERS), and Foreign Service Pension System; time and attendance records (domestic employees only), master employee registers (domestic only), payroll folders.

AUTHORITY FOR MAINTENANCE OF THE SYSTEM:

Section 113 of the Budget and Accounting Procedures Act of 1950, as amended.

PURPOSE OF THE SYSTEM:

To assure proper salary payment to domestic agency employees and for reference regarding salary history; master record of domestic employee accumulation of annual and sick leave, recording of employee contributions to the Civil Service Retirement System and FERS; recording of employee withholdings for transmission to Federal, State and local taxing authorities.

ROUTINE USES OF RECORDS MAINTAINED IN THE SYSTEM, INCLUDING CATEGORIES OF USERS AND THE PURPOSES OF SUCH USES:

To assure proper salary payment to (domestic) employees and for reference regarding salary history; master record of (domestic) employee accumulation of annual and sick leave; recording of employee contributions to the Civil Service Retirement, Foreign Service Retirement and Disability, Federal Employees Retirement and Foreign Service Pension Systems; to record and transmit on a biweekly basis employee Thrift Savings Plan contributions to the Federal Retirement Thrift Investment Board; recording of employee withholdings for transmission to Federal, State and local taxing authorities.

Information is made available on a need-to-know basis to personnel of the United States Information Agency as may be required in the performance of their official duties.

The principal users of this information outside the United States Information Agency are the U.S. Treasury, the Office of Personnel Management, and the Director General of the Foreign Service, U.S. Department of State. The information may also be released to other government agencies who have statutory or other lawful authority to maintain such information.

POLICIES AND PRACTICES FOR STORING, RETRIEVING, ACCESSING, RETAINING, AND DISPOSING OF RECORDS IN THE SYSTEMS:

STORAGE:

Time and attendance is maintained on 8½ x 11 time and attendance sheets or punch cards; retirement records are recorded on 8½ x 11 cards and maintained in a file cabinet or on the mainframe computer; the master employee register is a computer report; payroll records are maintained in manila folders; overseas pay cards are manually prepared or maintained as a computer report, depending upon the facilities at various overseas locations.

RETRIEVABILITY:

By the name of the individual employee (payroll); by name and/or social security number (retirement).

SAFEGUARDS:

1. Authorized Users: Limited access to staff sembers on a need-to-know basis.

2. Physical Safeguards: Security provided by surveillance of authorized employees during working hours and by security guards after working hours.

3. Procedural (or Technical) Safeguards: Access to records is strictly limited to those staff members who have a need-to-know.

4. Implementation Guidelines: USIA Manual of Operations.

RETENTION AND DISPOSAL:

Retirement records are forwarded to the Office of Personnel Management for domestic employees, and the State Department for foreign service employees, upon retirement, resignation or transfer of employee. Payroll records are retired to Federal Records Center, St. Louis, after three years.

SYSTEM MANAGER AND ADDRESS:

Chief, Financial Operations Division, USIA, 301 4th Street SW., Washington, DC 20547.

NOTIFICATION PROCEDURE:

Chief, Financial Operations Division, USIA, 301 4th Street SW., Washington, DC 20547.

RECORD ACCESS PROCEDURE:

Requests from individuals should be addressed to: Director, FOIA/Privacy Act Unit, Office of the General Counsel, United States Information Agency, 301 4th Street SW., Washington, DC 20547.

To request another individual's file the requester must have a notarized signed statement from the individual to whom the file pertains.

CONTESTING RECORD PROCEDURES:

The Agency's rules for access and for contesting contents and appealing initial determinations by the individual concerned appear in 22 CFR part 505.

RECORD SOURCE CATEGORIES:

Various forms provided by individual and by USIA's Office of Personnel, i.e., personnel action forms, payroll change forms, Federal and State withholding exemption certificates, employee allotment deduction forms, time and attendance sheets.

SYSTEMS EXEMPTED FROM CERTAIN PROVISIONS OF THE ACT:

Not applicable.

USIA-17

SYSTEM NAME:

Records on Shipment of Effects, Unaccompanied Baggage and Automobiles—M/CF.

SYSTEM LOCATION:

Office of the Comptroller, Financial Operations Division, United States Information Agency (USIA), 301 4th Street SW., Washington, DC 20547.

SECURITY CLASSIFICATION:

None.

CATEGORIES OF INDIVIDUALS COVERED BY THE SYSTEM:

Foreign service employees authorized to ship effects and automobiles overseas at USIA expense.

CATEGORIES OF RECORDS IN THE SYSTEM:

Paper cards listing payments made to packers, carriers, etc., in connection with shipment of effects, baggage and automobiles pursuant to travel authorizations.

AUTHORITY FOR MAINTENANCE OF THE SYSTEM:

31 U.S.C. 66a.

PURPOSE OF THE SYSTEM:

To determine if unauthorized charges were incurred due to excess shipments, indirect routing or other reasons.

ROUTINE USES OF RECORDS MAINTAINED IN THE SYSTEM, INCLUDING CATEGORIES OF USERS AND THE PURPOSES OF SUCH USES:

To determine if unauthorized charges were incurred due to excess shipments, indirect routing or other reasons.

Information is made available on a need-to-know basis to personnel of the USIA as may be required in the performance of their official duties.

Information in these records is not normally available to individuals or agencies outside the USIA, but records may be released to other government agencies who have statutory or other lawful authority to maintain such information.

POLICIES AND PRACTICES FOR STORING, RETRIEVING, ACCESSING, RETAINING AND DISPOSING OF RECORDS IN THE SYSTEM:

STORAGE:

Paper records maintained in tub file.

RETRIEVABILITY:

Filed alphabetically by company name.

SAFEGUARDS:

1. Authorized Users: Accounts analyst and supervisor.

2. Physical Safeguards: Security provided by surveillance of authorized employees during working hours and by security guards after working hours.

3. Procedural (or technical) Safeguards: Access to records is strictly limited to those staff members who have a need-to-know.

4. Implementation Guidelines: USIA Manual of Operations.

RETENTION AND DISPOSAL:

Records destroyed four years after the fiscal year in which shipment is authorized.

SYSTEM MANAGER AND ADDRESS:

Chief, Financial Operations Division, USIA, 301 4th Street SW., Washington, DC 20547.

NOTIFICATION PROCEDURE:

Chief, Financial Operations Division, USIA, 301 4th Street SW., Washington, DC 20547.

RECORD ACCESS PROCEDURE:

Requests from individuals should be addressed to: Director, FOIA/Privacy Act Unit, Office of the General Counsel, USIA, 301 4th Street SW.,Washington, DC 20547.

To request another individual's file the requester must have a notarized signed statement from the individual to whom the file pertains.

CONTESTING RECORD PROCEDURES:

The Agency's rules for access and for contesting contents and appealing determinations by the individual concerned appear in 22 CFR part 505.

RECORD SOURCE CATEGORIES:

USIA offices offering travel authorizations, travel vouchers submitted by employees; invoices submitted by carriers for payment.

SYSTEM EXEMPTED FROM CERTAIN PROVISIONS OF THE ACT:

Not applicable.

USIA-18

SYSTEM NAME:

Travel Authorization Obligation File—M/CF.

SYSTEM LOCATION:

Office of the Comptroller, Financial Operations Division, United States Information Agency (USIA), 301 4th Street SW, Washington, DC 20547.

SECURITY CLASSIFICATION:

None.

CATEGORIES OF INDIVIDUALS COVERED BY THE SYSTEM:

Individuals authorized to travel for which costs of travel are chargeable to USIA appropriations.

CATEGORIES OF RECORDS IN THE SYSTEM:

Copies of travel authorizations and copies of paid vouchers and/or abstracts or other documents relating to payments for authorized travel.

AUTHORITY FOR MAINTENANCE OF THE SYSTEM:

31 U.S.C. 66a.

PURPOSE OF THE SYSTEM:

To support recording of obligations of funds for travel; for audit of travel and transportation vouchers prior to certification and payment; control to avoid duplicate payment of claims.

ROUTINE USES OF RECORDS MAINTAINED IN THE SYSTEM INCLUDING CATEGORIES OF USERS AND THE PURPOSES OF SUCH USES:

To support recording of obligations of funds for travel; for audit of travel and transportation vouchers prior to certification and payment; control to avoid duplicate payment of claims. Also see Prefatory Statement of General Routine Uses.

Information is made available on a need-to-know basis to personnel of the USIA as may be required in the performance of their official duties.

Information in these records is not normally available to individuals or agencies outside the USIA, but records may be released to other government agencies who have statutory or other lawful authority to maintain such information.

POLICIES AND PRACTICES FOR STORING, RETRIEVING, ACCESSING, RETAINING, AND DISPOSING OF RECORDS IN THE SYSTEM:

STORAGE:

Paper files maintained in file cabinets, tubs, or accordion folders.

RETRIEVABILITY:

By name, date and/or social security number; cross-reference to travel authorization number filed by appropriation/allotment chargeable.

SAFEGUARDS:

1. Authorized users: Limited to those staff members who have a need-to-know.

2. Physical Safeguards: Security provided by surveillance of authorized employees during working hours and by security guards after working hours.

3. Procedural (or technical) safeguards: Access to records is strictly limited to those staff members who have a need-to-know.

4. Implementation guidelines: USIA Manual of Operations.

RETENTION AND DISPOSAL:

Alphabetical copy of travel authorizations destroyed 3 years after close of fiscal year in which issued. Folders destroyed between 4 and 10 years after the close of the fiscal year, depending upon the type of travel.

SYSTEM MANAGER AND ADDRESS:

Chief, Financial Operations Division, USIA, 301 4th Street SW, Washington, DC 20547.

NOTIFICATION PROCEDURE:

Chief, Financial Operations Division, USIA, 301 4th Street SW, Washington, DC 20547.

RECORD ACCESS PROCEDURE:

Requests from individuals should be addressed to: Director, FOIA/Privacy Act Unit, Office of the General Counsel, USIA, 301 4th Street SW, Washington, DC 20547.

To request another individual's file the requester must have a notarized signed statement from the individual to whom the file pertains.

CONTESTING RECORD PROCEDURES:

The Agency's rules for access and for contesting contents and appealing determinations by the individual concerned appear in 22 CFR part 505.

RECORD SOURCE CATEGORIES:

Standard forms and Agency forms prepared in connection with official travel by personnel.

SYSTEM EXEMPTED FROM CERTAIN PROVISIONS OF THE ACT:

Not applicable.

USIA-19

SYSTEM NAME:

Equal Employment Opportunity (EEO) Complaint Files—M/E.

SYSTEM LOCATION:

Office of Equal Employment Opportunity and Civil Rights, United States Information Agency (USIA), 301 4th Street SW, Washington, DC 20547.

SECURITY CLASSIFICATION:

None.

CATEGORIES OF INDIVIDUALS COVERED BY THE SYSTEM:

Any aggrieved employee with USIA who believes she or he has been discriminated against because of race, color, religion, sex, national origin, age, and/or handicap, or retaliated against for having filed a previous complaint of discrimination, and who has consulted with an Equal Employment Opportunity Counselor of the Agency or a member of the EEO staff about the matter.

AUTHORITY FOR MAINTENANCE OF THE SYSTEM:

42 U.S.C. 2000e-16; 29 U.S.C. 633a; 29 U.S.C. 206(d).

PURPOSE OF THE SYSTEM:

To record actions taken, with verifying statements, regarding employees' and employment applicants' complaints of discrimination.

ROUTINE USES OF RECORDS MAINTAINED IN THE SYSTEM, INCLUDING CATEGORIES OF USERS AND THE PURPOSES OF SUCH USES:

Principal users of this information outside the Agency are the Department of Justice and the Merit Systems

Protection Board. The information may also be released to other government agencies having statutory or other lawful authority to maintain such information.

Information is made available on a need-to-know basis to personnel of the Agency as may be required in the performance of their official duties. Also see Prefatory Statement of General Routine Uses.

POLICIES AND PRACTICES FOR STORING, RETRIEVING, ACCESSING, RETAINING, AND DISPOSING OF RECORDS IN THE SYSTEM:

STORAGE:

Partially automated system. Most information is stored in paper folders; however, some is also maintained on computer disks.

SAFEGUARDS:

Access is limited to EEO staff and contract EEO investigators. Records are stored in cabinets with bar locks. Files are not removed from the EEO office; however, copies are provided to complainant and/or complainant's representative, and may be provided to authorized government agencies. Computer-stored data is accessed by use of password known only to EEO officials. Maintained as per USIA MOA, V–A, (Domestic), Sections 560–565.

SYSTEM MANAGER AND ADDRESS:

Director, Office of Equal Employment Opportunity and Civil Rights, USIA, 301 4th Street SW., Washington, DC 20547.

NOTIFICATION PROCEDURE:

Director, Office of Equal Employment Opportunity and Civil Rights, USIA, 301 4th Street SW., Washington, DC 20547.

The individual must furnish name, status (current or former employee, applicant, etc.), reason for inquiry, address and telephone number, and social security number.

RECORD ACCESS PROCEDURE:

Requests from individuals should be addressed to: Director, FOIA/Privacy Act Unit, Office of the General Counsel, USIA, 301 4th Street SW., Washington, DC 20547.

To request another individual's file the requester must have a notarized signed statement from the individual to whom the file pertains.

CONTESTING RECORD PROCEDURES:

The Agency's rules for access and for contesting contents and appealing determinations by the individual concerned appear in 22 CFR part 505.

RECORD SOURCE CATEGORIES:

Personal interviews, affidavits, USIA Personnel and Employment Records and Procedures, Transcript of Hearings, and related correspondence.

SYSTEM EXEMPTED FROM CERTAIN PROVISIONS OF THE ACT:

Not applicable.

USIA–20

SYSTEM NAME:

Equal Employment Opportunity (EEO) General Files—M/E.

SYSTEM LOCATION:

Office of Equal Employment Opportunity and Civil Rights, United States Information Agency (USIA), 301 4th Street SW., Washington, DC 20547.

SECURITY CLASSIFICATION:

Some documents may be classified confidential.

CATEGORIES OF INDIVIDUALS COVERED BY THE SYSTEM:

Employees of the Agency, applicants for positions in the Agency, organizations and institutes of higher education applying for grants from the Agency, recruitment contacts, prominent individuals who may be appropriate contacts for promotion panels, speakers, Amparts, electronic media experts, and other individuals with whom the office is in contact, such as contractors and consultants.

CATEGORIES OF RECORDS IN THE SYSTEM:

Copies of applications, resumes, correspondence and bibliographical information regarding the individuals covered by the system, including memoranda to the files of employees covered by the system, who seek career counseling. General administrative files, including those dealing with travel, budget, training and personnel matters. Various affirmative action plans, correspondence with Agency officials, and others such as correspondence with other agencies and individuals requesting information. Chron files and historical files outlining a variety of actions taken by the office and others in the arena of EEO and Civil Rights. Computer generated lists of employees, and statistical studies of various parts of the Agency. Medical records of applicants and employees with disabling conditions and compliance records containing information about the EEO status of Agency grantee organizations and action taken on their applications.

AUTHORITY FOR MAINTENANCE OF THE SYSTEM:

29 CFR parts 1613 et seq.

PURPOSE OF THE SYSTEM:

To enable the office to carry out activities designed to recruit, hire, train, promote, assign and otherwise provide equal employment opportunity to employees of and applicants for employment in the USIA. Compliance Review files containing information about grant applicants' implementation of Titles VI, VII, and IX of the Civil Rights Act of 1964, as amended, the Rehabilitation Act of 1974, as amended, and the Age Discrimination in Employment Act, as amended, enable the office to monitor and implement Federal regulations as stipulated in these statutes.

ROUTINE USES OF RECORDS MAINTAINED IN THE SYSTEM, INCLUDING CATEGORIES OF USERS AND THE PURPOSES OF SUCH USES:

See Standardized General Routine Uses (not including 12 through 18). Also, this information is made available on a need-to-know basis to Personnel Officers of the USIA as may be required in the performance of their duties. It may also be provided to Congressional Committees, individual Members of Congress, the White House, the Department of Justice, the Office of Personnel Management, the Equal Employment Opportunity Commission and to other government entities who have statutory or other lawful authority to maintain such information. Compliance Review information may also be released to grant applicants on request. Also see Prefatory Statement of General Routine Uses.

POLICIES AND PRACTICES FOR STORING, RETRIEVING, ACCESSING, RETAINING, AND DISPOSING OF RECORDS IN THE SYSTEM:

STORAGE:

The system is partially automated. Some information is also maintained on discs, and some in paper folders.

RETRIEVABILITY:

Records are retrieved by name and types of activity, i.e., affirmative action plans, travel, training, Amparts, etc.

SAFEGUARDS:

1. Authorized users include EEO staff members and contract EEO investigators who are authorized to have access to the system of records in the performance of their duties.

2. Physical safeguards include bar-locked safes, back-up discs, fire extinguisher within twenty feet, security guard patrol (off-duty hours).

3. Procedural safeguards include separate maintenance of tables linking codes, data encryption, security software providing restricted commands

programs, employee training, procedures for recording and reporting security violations, computer log-on codes. Contract investigator has security clearance and is supervised by an M/E staff member.

SYSTEM MANAGER AND ADDRESS:

Director, Office of Equal Employment Opportunity and Civil Rights, USIA, 301 4th Street, SW., Washington, DC 20547.

NOTIFICATION PROCEDURE:

Director, Office of Equal Employment Opportunity and Civil Rights, USIA, 301 4th Street, SW., Washington, DC 20547. The individual must furnish name, status (i.e., employee, applicant for employment, etc.), reason for inquiry, address and telephone number.

RECORD ACCESS PROCEDURE:

Requests from individuals should be addressed to:

Director, FOIA/Privacy Act Unit, Office of the General Counsel, USIA, 301 4th Street, SW., Washington, DC 20547.

To request another individual's file the requester must have a notarized signed statement from the individual to whom the file pertains.

CONTESTING RECORD PROCEDURES:

The Agency's rules for access and for contesting contents and appealing determinations by the individual concerned appear in 22 CFR part 505.

RECORD SOURCE CATEGORIES:

Correspondence, memos of conversation, Agency records of personnel actions, published biographical sources.

SYSTEM EXEMPTED FROM CERTAIN PROVISIONS OF THE ACT.

Not applicable.

USIA-21

SYSTEM NAME:

Minority Group Data (MGD)—M/E

SYSTEM LOCATION:

Office of Equal Employment Opportunity and Civil Rights, United States Information Agency (USIA), 301 4th Street, SW., Washington, DC 20547.

SECURITY CLASSIFICATION:

None.

CATEGORIES OF INDIVIDUALS COVERED BY THE SYSTEM:

All employees of USIA and some applicants for employment in USIA.

CATEGORIES OF RECORDS IN THE SYSTEM:

Records are categorized by name, race, sex, national origin, age, grade or wage level, handicap or lack thereof and may contain medical records.

AUTHORITY FOR MAINTENANCE OF THE SYSTEM:

29 CFR 1613.301, 29 CFR 1613.302.

PURPOSE OF THE SYSTEM:

To compile statistical records of women, minorities, and individuals with disabling conditions who are considered for employment, hired, promoted, assigned, trained, awarded, disciplined, and/or separated or who resign from USIA. To measure EEO progress and to identify problems.

ROUTINE USES OF RECORDS MAINTAINED IN THE SYSTEM, INCLUDING CATEGORIES OF USERS AND THE PURPOSES OF SUCH USE:

Information is made available on a need-to-know basis to personnel of the USIA as may be required in the performance of their official duties, in implementing affirmative action plans and in processing complaints of discrimination. Information is not normally available to individuals or agencies outside the USIA, but records may be released to other government agencies having a statutory or other lawful authority to maintain such information. The principal users of this information outside of USIA are the Equal Employment Opportunity Commission, the Office of Personnel Management, the Department of Justice, the Department of State, and the Congress. Also see Prefatory Statement of General Routine Uses.

POLICIES AND PRACTICES FOR STORING RETRIEVING ACCESSING, RETAINING, AND DISPOSING OF RECORDS IN THE SYSTEM:

STORAGE:

Paper records and computer disks.

RETRIEVABILITY:

By name, race, sex, age, handicap, national origin, agency location, date of entry or separation, date of last promotion, grade or wage level.

SAFEGUARDS:

1. Authorized users are members of the EEO Staff and certain authorized members of the Office of Personnel, Policy and Services Staff.

2. Physical safeguards include bar-locked safes, back-up discs, fire extinguisher within twenty feet, security guard patrol (off-duty hours).

3. Procedural safeguards include separate maintenance of tables linking codes, data encryption, security software providing restricted commands programs, employee training, procedures for recording and reporting security violation's. Contractors are supervised by employees with security clearances.

4. The source of security standards is 29 CFR 1613.301 et seq.

SYSTEM MANAGER AND ADDRESS:

Director, Office of Equal Employment Opportunity and Civil Rights, USIA, 301 4th Street, SW., Washington, DC 20547.

NOTIFICATION PROCEDURE:

Director, Office of Equal Employment Opportunity and Civil Rights, USIA, 301 4th Street, SW., Washington, DC 20547.

RECORD ACCESS PROCEDURE:

Requests. from individuals should be addressed to:

Director, FOIA/Privacy Act Unit, Office of the General Counsel, USIA, 301 4th Street, SW., Washington, DC 20547.

To request another individual's file the requester must have a notarized signed statement from the individual to whom the file pertains.

CONTESTING RECORD PROCEDURES:

The Agency's rules for access and for contesting contents and appealing determinations by the individual concerned appear 22 CFR part 505.

RECORD SOURCE CATEGORIES:

From the employee or applicant concerned, USIA personnel data, visual inspection of the employee or applicant.

SYSTEM EXEMPTED FROM CERTAIN PROVISIONS OF THE ACT:

Not applicable.

USIA-22

SYSTEM NAME:

Solicitation Mailing List Application—M/K.

SYSTEM LOCATION:

United States Information Agency (USIA), Office of Contracts, 330 C. Street, SW., Washington, D.C. 20547.

SECURITY CLASSIFICATION:

None.

CATEGORIES OF INDIVIDUALS COVERED BY THE SYSTEM:

Prospective government contractors and Agency contractors.

CATEGORIES OF RECORDS IN THE SYSTEM:

Information is contained on a standard form which requests the individual's name and address, type of business, number of employees, average annual sales or receipts, facilities (space), net worth, security clearances held, and a certification of the accuracy of the information provided on the form.

AUTHORITY FOR MAINTENANCE OF THE SYSTEM:

Federal Acquisition Regulation (45 CFR 14.205-1(c) and 53.214(e)).

ROUTINE USES OF RECORDS MAINTAINED IN THE SYSTEM, INCLUDING CATEGORIES OF USERS AND THE PURPOSES OF SUCH USES:

To prepare the Agency's Solicitation Mailing List and for use of contracting specialists to determine adequacy of facilities, and financial responsibility of prospective contractors. Also see Prefatory Statement of General Routine Uses.

Information is made available on a need-to-know basis to personnel of the USIA as may be required in the performance of their official duties.

The information may also be released to other government agencies who have statutory or other lawful authority to maintain such information.

The principal user of this information outside the USIA is the General Services Administration.

POLICIES AND PRACTICES FOR STORING, RETRIEVING, ACCESSING, RETAINING, AND DISPOSING OF RECORDS IN THE SYSTEM:

STORAGE:

Information included on Standard Form 129 is maintained in a lektriever filing system. Records are also fully automated on the Agency's VS–100 "D" system. Records are backed up daily to computer tape and stored in the Agency's computer library.

RETRIEVABILITY:

By the name of the individual.

SAFEGUARDS:

1. Authorized users: Contracting personnel and other authorized Agency personnel.

2. Physical safeguards: All records are stored in a lektriever filing system in a secured area. Automated records are maintained in the Agency's computer library.

3. Procedural safeguards: All users of the informtion stored in these systems protect the information from public view and unauthorized personnel. Data stored in computers are accessed through the use of passwords known only to authorized personnel.

4. Implementation guidelines: USIA Manual of Operations and Administration (MOA) III–500, Records Management Handbook (Domestic) Section 560–565.

RETENTION AND DISPOSAL:

A routine update of information is conducted approximately every three years. Outdated information is disposed of internally.

SYSTEM MANAGER AND ADDRESS:

Director, Office of Contracts, USIA, 330 C Street SW., Washington, DC 20201.

NOTIFICATION PROCEDURES:

Director, Office of Contracts, USIA, 330 C Street SW., Washington, DC 20201.

RECORD ACCESS PROCEDURE:

Requests from individuals should be addressed to: Director, FOIA/Privacy Act Unit, Office of the General Counsel, USIA, 301 4th Street SW., Washington, DC 20547.

To request another individual's file the requester must have a notarized signed statement from the individual to whom the file pertains.

CONTESTING RECORD PROCEDURES:

The Agency's rules for access and for contesting contents and appealing determination's by the individual concerned appear in 22 CFR part 505.

RECORD SOURCE CATEGORIES:

Information provided by individuals, companies and corporations.

SYSTEM EXEMPTED FROM CERTAIN PROVISIONS OF THE ACT:

Not applicable.

USIA–23

SYSTEM NAME:

United States Information Agency (USIA) Procurement Personnel Information System—M/K.

SYSTEM LOCATION:

USIA, Office of Contracts, 330 C Street SW., Washington, DC 20547.

SECURITY CLASSIFICATION:

None.

CATEGORIES OF INDIVIDUALS COVERED BY THE SYSTEM:

USIA employees involved with procurement activities.

CATEGORIES OF RECORDS IN THE SYSTEM:

Names, office, position title, series and grade, service computation date, position description, education, training, experience, professional recognition, career objectives.

AUTHORITY FOR MAINTENANCE OF THE SYSTEM:

Authority for this system is derived from the Federal Records Act, 44 U.S.C. 3101, and Federal Acquisition Regulation, Subpart 1–6.

ROUTINE USES OF RECORDS MAINTAINED IN THE SYSTEM, INCLUDING CATEGORIES OF USERS AND THE PURPOSES OF SUCH USES:

Identification of employees who have met standards of experience, education, and training for appointment as Contracting Officers and to analyze procurement system performance such as functional placement, system training needs, and workforce size. Information is available to personnel of the USIA as may be required for performance of official duties. Information on individuals will not normally be available outside the USIA as it falls within the excepted guidelines of the Freedom of Information Act (FOIA). Also See Prefatory Statement of General Routine Uses.

POLICIES AND PRACTICES FOR STORING, RETRIEVING, ACCESSING, RETAINING, AND DISPOSING OF RECORDS IN THE SYSTEM:

STORAGE:

All informaation will be maintained in a paper hard copy file which will be automated as soon as possible.

RETRIEVABILITY:

Records are retrieved by name, office, series and grade.

SAFEGUARDS:

1. Authorized users: Office of Contracts personnel.

2. Physical safeguards: Files are kept in the Office of Contracts in a bar-lock cabinet.

3. Procedural safeguards: All users of personal information in connection with the performance of their jobs protect information from public view and from unauthorized personnel entering into the office. Access to records is strictly limited to the Office of Contract personnel.

4. Implementation guidelines: USIA Manual of Operations and Administration (MOA) III–500, Records Management Handbook (Domestic) Section 560–565.

RETENTION AND DISPOSAL:

Files will be retained as long as the individual remains an employee of the USIA, and will be destroyed upon the employee's separation.

SYSTEM MANAGER AND ADDRESS:

Director, Office of Contracts, USIA, 330 C Street SW., Washington, DC 20201.

NOTIFICATION PROCEDURE:

Director, Office of Contracts, USIA, 330 C Street SW., Washington, DC 20201.

RECORD ACCESS PROCEDURE:

Requests from individuals should be addressed to: Director, FOIA/Privacy Act Unit, Office of the General Counsel, USIA, 301 4th Street SW., Washington, DC 20547.

To request another individual's file the requester must have a notarized signed statement from the individual to whom the file pertains.

CONTESTING RECORD PROCEDURES:

The Agency s rules for access and for contesting contents and appealing determinations by the individual concerned appear in 22 CFR part 505.

RECORD SOURCE CATEGORIES:

Information is provided by the individual concerned.

SYSTEMS EXEMPTED FROM CERTAIN PROVISIONS OF THE ACT:

Not applicable.

USIA-24

SYSTEM NAME:

Employee Grievance Files—M/P.

SYSTEM LOCATION:

Office of Personnel, United States Information Agency (USIA), 301 4th Street SW, Washington, DC 20547.

SECURITY CLASSIFICATION:

Top secret.

CATEGORIES OF INDIVIDUALS COVERED BY THE SYSTEM:

Agency employees who have filed informal grievances or complaints, or who have filed formal grievances for Agency level review; employees for whom special disciplinary action is in process.

CATEGORIES OF RECORDS IN THE SYSTEM:

All documents necessary in the processing of a grievance or special disciplinary actions, such as position descriptions, performance evaluations, grievance investigation reports, special investigation reports, OIG reports, Post Audit and Inspection Report; statements of supervisors, witnesses, representatives of grievants; arbitration awards, Foreign Service Grievance Board letters and decisions; and miscellaneous housekeeping records.

AUTHORITY FOR MAINTENANCE OF THE SYSTEM:

5 U.S.C. 1302, 3301, 3302, 7301; 22 U.S.C. 3901; 5 U.S.C. 7121; 44 U.S.C. 3101; Pub. L. 93-181; Agency's Manual of Operations and Administration (MOA); FPM 511-Subchapter 6; FPM Letter 630-22; FPM Chapter 335, 752, 831; Foreign Affairs Manual (3 FAM 660).

ROUTINE USES OF RECORDS MAINTAINED IN THE SYSTEM, INCLUDING CATEGORIES OF USERS AND THE PURPOSES OF SUCH USES:

Investigation and resolution of employee grievances; to provide information and documentation to the grievant's counsel or representatives, Arbitrators, the Foreign Service Grievance Board, Federal Appeals Board, United States Courts, and to Members of Congress on the written request of the individual; to provide information to the Agency's General Counsel in connection with the processing of a grievance, an appeal, or an adverse action. Information is also available on a need-to-know basis to personnel of the USIA in the performance of their official duties. The principal users of this information outside the USIA are: the Office of Personnel Management (OPM); Department of Justice; other government agencies which have statutory or legal authority to access or maintain such information. Also see Prefatory Statement of General Routine uses.

POLICIES AND PRACTICE FOR STORING, RETRIEVING, ACCESSING, RETAINING, AND DISPOSING OF RECORDS IN THE SYSTEM:

STORAGE:

Paper records in file folders, filed alphabetically, and stored in metal cabinets with bar-locks.

RETRIEVABILITY:

Alphabetically by name of individuals.

SAFEGUARDS:

Authorized users—personnel of the USIA on a substantial need-to-know basis and in the performance of their official duties, e.g., General Counsel staff, Labor Relations Officers (grievance examiners and investigators); "deciding officials" (under negotiated or Agency Grievance Procedures); members of the Foreign Service Grievance Board and staff; grievants and representative of grievants.

PHYSICAL SAFEGUARDS:

Documents classified in the national security interest pursuant to E.O. 12356, thus the files are afforded a high level of protection against unauthorized access. Security guards perform random checks on the physical security of the files and data.

PROCEDURAL SAFEGUARDS:

Access to records is strictly limited to those staff members with substantial need-to-know, who have been thoroughly indoctrinated on Privacy Act provisions and requirements. Staff members are also responsible for protecting grievance records from the general public entering the grievance office areas.

IMPLEMENTATION GUIDELINES:

Safeguards implemented are developed in accordance with "Access to and Protection of Records on Individuals", USIA MOA V-A (Domestic), Sections 560-565.

RETENTION AND DISPOSAL:

Records are maintained in the active file for 3 years or until no longer needed; records removed from the "active files" are stored in metal file cabinets, bar-locked, and in a secure, locked room with controlled access.

SYSTEM MANAGER AND ADDRESS:

Chief, Labor Relations Staff (M/PPL), Office of Personnel, USIA, 301 4th Street SW, Washington, DC 20547.

NOTIFICATION PROCEDURE:

Office of Personnel, USIA, 301 4th Street SW, Washington, DC 20547.

RECORD ACCESS PROCEDURE:

Requests from individuals should be addressed to: Director, FOIA/Privacy Act Unit, Office of the General Counsel, USIA, 301 4th Street SW, Washington, DC 20547.

To request another individual's file the requester must have a notarized signed statement from the individual to whom the file pertains.

CONTESTING RECORD PROCEDURES:

The Agency's rules for access and for contesting contents and appealing determinations by the individual concerned appear in 22 CFR part 505.

RECORD SOURCE CATEGORIES:

Individual employee concerned, Agency officials, testimony of witnesses, employee's representative, relevant documents.

SYSTEMS EXEMPTED FROM CERTAIN PROVISIONS OF THE ACT:

Certain records in the system may be exempted from 5 U.S.C. 552(a), (c)(3), (d), (e)(1), (e)(4)(G), (H), (I) and (f). See 22 CFR 505.15.

USIA-25

SYSTEM NAME:

Recruitment Records—M/P

SYSTEM LOCATION:

Office of Personnel Services, United States Information Agency (USIA), 301 4th Street SW, Washington, DC 20547.

SECURITY CLASSIFICATION:

None.

CATEGORIES OF INDIVIDUALS COVERED BY THE SYSTEM:

Applicants for foreign service or domestic employment; applicants for personnel or management intern positions; employees hired under the worker-trainee program, individuals certified by the Office of Personnel Management (OPM) for appointment consideration.

CATEGORIES OF RECORDS IN THE SYSTEM:

Employment application forms; resumes and replies to employment inquiries; personnel security data forms; results of written examination; notes on interviews by selection panels; records on availability of job applicants; OPM employment certificates.

AUTHORITY FOR MAINTENANCE OF THE SYSTEM:

44 U.S.C. 3101; FPM 333 Subchapter 1–1; FPM Chapter 713. FPM Bulletin 713–31, FPM 332, Appendix B, FPM Chapter 731, FPM Chapter 732.

ROUTINE USES OF RECORDS MAINTAINED IN THE SYSTEM, INCLUDING CATEGORIES OF USERS AND THE PURPOSES OF SUCH USE:

Used for recruitment and evaluating employment applicants; to determine Agency employment needs; evaluation of minority hiring practices; selection of candidates for intern and other programs; evaluation of progress of employees on worker-trainee programs; monitor status of pre-employment security investigation. Also see Prefatory Statement of General Routine Uses.

Information is made available on a need-to-know basis to personnel of the USIA as may be required in the performance of their official duties. The principal users of this information outside the USIA are the Office of Personnel Management, the Director General of the Foreign Service, Department of State, accredited investigators; and the Board of Examiners for the Foreign Service.

The information may also be released to other government agencies who have statutory or other lawful authority to maintain such information.

POLICIES AND PRACTICES FOR STORING, RETRIEVING, ACCESSING, RETAINING, AND DISPOSING OF RECORDS IN THE SYSTEM:

STORAGE:

Paper records in file folders.

RETRIEVABILITY:

By name of the individual.

SAFEGUARDS:

Maintained in locked file cabinets.

RETENTION AND DISPOSAL:

Records of successful employment candidates transferred to official personel folder; records of unsuccessful candidates destroyed after 2 years; OPM certificates retained indefinitely; security files destroyed after candidate is given security clearance; other records retained indefinitely or disposed of in accordance with Agency's internal regulations.

SYSTEM MANAGER AND ADDRESS:

Chief, Employment Branch, Office of Personnel Services, USIA, 301 4th Street SW., Washington, DC 20547.

NOTIFICATION PROCEDURE:

Chief, Employment Branch, Office of Personnel Services, USIA, 301 4th Street SW., Washington, DC 20547.

RECORD ACCESS PROCEDURE:

Requests from individuals should be addressed to: Director, FOIA/Privacy Act Unit, Office of the General Counsel, USIA, 301 4th Street SW., Washington, DC 20547.

To request another individual's file the requester must have a notarized signed statement from the individual to whom the file pertains.

CONTESTING RECORD PROCEDURES:

The Agency's rules for access and for contesting contents and appealing determinations by the individual concerned appear in 22 CFR part 505.

RECORD SOURCE CATEGORIES:

Employment applicants; college transcripts and other recruitment sources: test scores provided by testing Agency; notes prepared by selection panels; the OPM; and the USIA Office of Security.

SYSTEMS EXEMPTED FROM CERTAIN PROVISIONS OF THE ACT:

Certain records contained within this system of records may be exempted from 5 U.S.C. 552a(c)(3), (d), (e)(1), (e)(4)(G), (H), (I), and (f). See 22 CFR 505.15.

USIA–26

SYSTEM NAME:

Senior Officer Files—M/P.

SYSTEM LOCATION:

Office of Personnel Services, United States Information Agency (USIA), 301 4th Street SW., Washington, DC 20547.

SECURITY CLASSIFICATION:.

None.

CATEGORIES OF INDIVIDUALS COVERED BY THE SYSTEM:

Employees in grades GS–14, 15, 16, 17, 18 and Foreign Service Officer Class equivalents.

CATEGORIES OF RECORDS IN THE SYSTEM:

Biographical, professional and experience information on employees nominated for senior level positions, position descriptions and position evaluations.

AUTHORITY FOR MAINTENANCE IN THE SYSTEM:

FPM 305, Supp. 305–1. FPM–300, Subchapter 3.

ROUTINE USES OF RECORDS MAINTAINED IN THE SYSTEM, INCLUDING CATEGORIES OF USERS AND THE PURPOSES OF SUCH USE:

Reference material for the Director's staff, element heads and personnel officers; placement of high level employees in proper management positions and to ensure their consideration for vacancies government-wide; used by personnel officers for personnel management functions; requested from time to time by OPM, OMB, and Congress for position control of supergrade employees. Also see Prefatory Statement of General Routine Uses.

Information is made available on a need-to-know basis to personnel of the VSIA as may be required in the performance of their official duties. The principal users of this information outside the USIA are: The Office of Personnel Management (OPM), the Office of Management and Budget (OMB); the Congress; personnel officers in other government agencies as a result of a transfer or potential transfer of the individual to whom the records pertain.

The information may also be released to other government agencies who have statutory or other lawful authority to maintain such information.

POLICIES AND PRACTICES FOR STORING, RETRIEVING, ACCESSING, RETAINING, AND DISPOSING OF RECORDS IN THE SYSTEM:

STORAGE:

Paper records in file folders.

RETRIEVABILITY:

By name and grade of individual, or combinations of name and grade.

SAFEGUARDS:

Maintained in locked file cabinet.

RETENTION AND DISPOSAL:

Records maintained indefinitely, or until employee is separated, at which time pertinent infor:?tion is filed in the Official Personnel File; all other material is destroyed as provided in Agency internal regulations.

SYSTEM MANAGER AND ADDRESS:

Chief, Domestic Personnel Division, USIA, 301 4th Street SW., Washington, DC. 20547.

NOTIFICATION PROCEDURE:

Chief, Domestic Personnel Division, USIA, 301 4th Street SW., Washington, DC 20547.

RECORD ACCESS PROCEDURE:

Requests from individuals should be addressed to: Director, FOIA/Privacy Act Unit, Office of the General Counsel,

USIA, 301 4th Street SW., Washington, DC 20547.

To request another individual's file the requester must have a notarized signed statement from the individual to whom the file pertains.

CONTESTING RECORD PROCEDURES:

The Agency's rules for access and for contesting contents and appealing determinations by the individual concerned appear in 22 CFR part 505.

RECORD SOURCE CATEGORIES:

Official Personnel Files; from the employee; element heads; position classifiers.

SYSTEM EXEMPTED FROM CERTAIN PROVISIONS OF THE ACT:

Not applicable.

USIA–

SYSTEM NAME:

Employment Requests—M/PDS.

SYSTEM LOCATION:

Office of Personnel, United States Information Agency (USIA), 301 4th Street SW., Washington, DC 20547.

SECURITY CLASSIFICATION:

None.

CATEGORIES OF INDIVIDUALS COVERED BY THE SYSTEM:

Certain individuals seeking employment with the Agency such as Congressional referrals, referrals of Director, etc.

CATEGORIES OF RECORDS IN THE SYSTEM:

Letters, memos, resumes, recommendations, biographic data and referrals submitted to the Director, Office of Personnel, for the purpose of soliciting employment with the Agency.

AUTHORITY FOR MAINTENANCE OF THE SYSTEM:

The Federal Records Act, 44 U.S.C. 3101.

ROUTINE USES OF RECORDS MAINTAINED IN THE SYSTEM, INCLUDING CATEGORIES OF USERS AND THE PURPOSES OF SUCH USES:

To answer inquiries from Members of Congress regarding emploment opportunities for constituents; referrals to Agency elements for qualification evaluations. Also see Prefatory Statement of General Routine Uses.

Information is made available on a need-to-know basis to personnel of the USIA as may be required in the performance of their official duties.

Information in these records is not normally available to individuals or agencies outside the USIA, but records may be released to other government agencies who have statutory or other lawful authority to maintain such information.

POLICIES AND PRACTICES FOR STORING, RETRIEVING, ACCESSING, RETAINING, AND DISPOSING OF RECORDS IN THE SYSTEM:

STORAGE:

Paper records in file folders.

RETRIEVABILITY:

By name of individual and month of response.

SAFEGUARDS:

Maintained in bar-lock file cabinets.

RETENTION AND DISPOSAL:

Records retained until no longer useful, or until after 2 years from date of submission, whichever is first. Records are destroyed by burning.

SYSTEM MANAGER AND ADDRESS:

Chief, Special Services Branch (M/PDS), Domestic Personnel Division, Office of Personnel, USIA, 301 4th Street SW., Washington, DC 20547

NOTIFICATION PROCEDURE:

Chief, Special Services Branch, Office of Personnel, USIA, 301 4th Street SW., Washington, DC 20547.

RECORD ACCESS PROCEDURE:

Requests from individuals should be addressed to: Director, FOIA/Privacy Act Unit, Office of the General Counsel, USIA, 301 4th Street SW., Washington, DC 20547.

To request another individual's file the requester must have a notarized signed statement from the individual to whom the file pertains.

CONTESTING RECORD PROCEDURES:

The Agency's rules for access and for contesting contents and appealing determinations by the individual concerned appear in 22 CFR part 505.

RECORD SOURCE CATEGORIES:

Unsolicited information or referrals submitted to the Agency by individuals seeking information on employment possibilities.

SYSTEMS EXEMPTED FROM CERTAIN PROVISIONS OF THE ACT:

Not applicable.

USIA–28

SYSTEM NAME:

Employee Master Personnel Records—M/PDSE.

SYSTEM LOCATION:

Office of Personnel, United States Information Agency (USIA), 301 4th Street SW., Washington, DC 20547. Computer tape and disc records are located in M/PPS at same address.

SECURITY CLASSIFICATION:

None.

CATEGORIES OF INDIVIDUALS COVERED BY THE SYSTEM:

All Agency employees and reimbursables from other agencies.

CATEGORIES OF RECORDS IN THE SYSTEM:

Data on employee's work experience, assignments, promotions, transfers, within-grade increases, personnel actions, commendations, evaluations of work performance, medical information, training certificates, home address, next-of-kin information, information related to security clearances, suspense reports on various events, such as appointment expiration dates, date probation ends, date promotion eligibility, expiration of LWOP, etc.

AUTHORITY FOR MAINTENANCE OF THE SYSTEM:

Executive Order 10561; FPM Chapter 291–93; 5 U.S.C. 13–2, 2951, 4118, 4308, 4506, FPM Chapter 713, Subchapter 3; Executive Order 14492; 44 U.S.C. 3101; FPM Chapter 732.

ROUTINE USES OF RECORDS MAINTAINED IN THE SYSTEM, INCLUDING CATEGORIES OF USERS AND THE PURPOSES OF SUCH USES:

To prepare reports required by the Office of Personnel Management (OPM), Congress and OMB; used by OPM and investigatory agencies to verify employee statements on applications for employment with other agencies; investigation of discrimination complaints; statistical reporting to OPM on minority employment, handicap programs, and other special programs; control of personnel ceilings; project and assess personnel movement dynamics; conducting security checks and updating security clearances; preparation of employee performance ratings and evaluations; used by Selection Boards and Merit Promotion Panels to determine whether employees should be recommended for promotion; used for routine personnel management and administration. Also see Prefatory Statement of General Routine Uses.

Information is made available on a need-to-know basis to personnel of USIA as may be required in the performance of their official duties.

Principal users of this information outside USIA are: The Office of Personnel Management (OPM), the Department of State, the Office of Management and Budget (OMB), the General Accounting Office (GAO), and personnel offices of other government agencies when an employee seeks transfer or detail; accredited investigators.

POLICIES AND PRACTICES FOR STORING, RETRIEVING, ACCESSING, RETAINING, AND DISPOSING OF RECORDS IN THE SYSTEM:

STORAGE:

Computer disc and magnetic tape; computer printouts, visual card files, paper records in file folders.

RETRIEVABILITY:

By employee name, agency element, employee identification number, grade/class, tenure code, and other data elements.

SAFEGUARDS:

Computer files are stored internally in the computer or in locked tape file cabinets and cannot be physically accessed except by authorized personnel; paper files and card trays in metal cabinets secured in a locked room; access controlled by "sign out" records; computer access restricted to those with user identification and pass words.

RETENTION AND DISPOSAL:

Computer printouts destroyed by shredding or burning when new listings are produced; computer tapes retained indefinitely; other records retained until employee is separated, and then disposed of by transfer to OPM, other employing agency, Federal Records Center, or destruction as directed by internal agency regulations.

SYSTEM MANAGER AND ADDRESS:

For paper records—Chief, *Special Services Branch* M/PPS, Office of Personnel, USIA, 301 4th Street SW., Washington, DC 20547. For automated records—Chief, *Special Services Branch* M/PPS, Office of Personnel, USIA, 301 4th Street SW., Washington, DC 20547.

NOTIFICATION PROCEDURE:

Chief, Special Services Branch, Office of Personnel, USIA, 301 4th Street SW., Washington, DC 20547.

RECORD ACCESS PROCEDURE:

Requests from individuals should be addressed to: Director, FOIA/Privacy Act Unit, Office of the General Counsel, USIA, 301 4th Street SW., Washington, DC 20547.

To request another individual's file the requester must have a notarized signed statement from the individual to whom the file pertains.

CONTESTING RECORD PROCEDURES:

The Agency's rules for access and for contesting contents and appealing determinations by the individual concerned appear in 22 CFR part 505.

RECORD SOURCE CATEGORIES:

Employee; employment application; official personnel records, personnel action forms; administrative file; budget and personnel authorizations; employees' supervisors; USIA Office of Security; training officers and other officials involved in personnel management.

SYSTEMS EXEMPTED FROM CERTAIN PROVISIONS OF THE ACT:

Certain records contained within this system of records may be exempted from 5 U.S.C. 552a(c)(3), (d), (e), (1), (e)(4)(G), (H), (I), and (f). See 22 CFR 505.15.

USIA-29

SYSTEM NAME:

Retirement and Insurance Records—M/PDSR.

SYSTEM LOCATION:

Office of Personnel, United States Information Agency (USIA), 301 4th Street SW., Washington, DC 20547.

SECURITY CLASSIFICATION:

None for the system. Treated as privacy sensitive.

CATEGORIES OF INDIVIDUALS COVERED BY THE SYSTEM:

USIA employees in retirement processing, approaching mandatory retirement, or actually retired from USIA. (Contact VOA/P for VOA employees.)

CATEGORIES OF RECORDS IN THE SYSTEM:

Retirement service history (USIA only); computer listings of (1) persons retiring mandatorily; (2) persons who are projected to retire within 5 years. Lists give name, date of birth, service computation date, grade/step, salary, location code, and retirement code.

AUTHORITY FOR MAINTENANCE OF THE SYSTEM:

FPM Supplement 830-1; 3 FAM 670; Federal Records Act of 1950, as amended, 44 U.S.C. 3101.

ROUTINE USES OF RECORDS MAINTAINED IN THE SYSTEM, INCLUDING CATEGORIES OF USERS AND THE PURPOSES OF SUCH USES:

Processing retirement applications and counseling prospective retirees on annuities and other benefits. Also see Prefatory Statement of General Routine Uses.

Information is made available on a need-to-know basis to personnel of USIA as may be required in the performance of their official duties. The information also may be released to other government agencies who have statutory or other lawful authority to maintain such information.

POLICIES AND PRACTICES FOR STORING, RETRIEVING, ACCESSING, RETAINING, AND DISPOSING OF RECORDS IN THE SYSTEM:

STORAGE:

Paper records in individual file folders.

RETRIEVABILITY:

Manually by name of employee.

SAFEGUARDS:

Maintained in locked file cabinets.

RETENTION AND DISPOSAL:

Employee retirement files retained indefinitely. After retirement, retained one year and then destroyed since records transferred to the retirement system. Old computer listings destroyed when updated; individual retirement computation worksheets filed in employee's retirement file.

SYSTEM MANAGER AND ADDRESS:

Chief, Retirement and Insurance Section (M/PDSR), Special Services Branch, Domestic Personnel Division, Office of Personnel, USIA, 301 4th Street SW., Washington, DC 20547.

NOTIFICATION PROCEDURE:

Chief, Retirement and Insurance Section, Office of Personnel, USIA, 301 4th Street SW., Washington, DC 20547.

RECORD ACCESS PROCEDURE:

Requests from individuals should be addressed to: Director, FOIA/Privacy Act Unit, Office of the General Counsel, USIA, 301 4th Street SW., Washington, DC 20547.

To request another individual's file the requester must have a notarized signed statement from the individual to whom the file pertains.

CONTESTING RECORD PROCEDURES:

The Agency's rules for access and for contesting contents and appealing determinations by the individual concerned appear in 22 CFR part 505.

RECORD SOURCE CATEGORIES:

Employees; Official Personnel File; supervisors; Agency's payroll and leave office; appropriate retirement systems of the Office of Personnel Management, or Department of State.

SYSTEMS EXEMPTED FROM CERTAIN PROVISIONS OF THE ACT:

Not applicable.

USIA-30

SYSTEM NAME:

Foreign Service Location File—M/PF.

SYSTEM LOCATION:

Foreign Service Lounge United States Information Agency (USIA), 301 4th Street SW., Washington, DC 20547.

SECURITY CLASSIFICATION:

None.

CATEGORIES OF INDIVIDUALS COVERED BY THE SYSTEM:

All Agency foreign service employees and foreign service retirees.

CATEGORIES OF RECORDS IN THE SYSTEM:

Foreign service employees' nature of assignment overseas; position held, home address, address of next-of-kin, employee's personal bank (if requested the Agency deposit checks); last home address of retirees.

AUTHORITY FOR MAINTENANCE OF THE SYSTEM:

The Federal Records Act, 44 U.S.C. 3101; Foreign Service Act of 1980, as amended.

ROUTINE USES OF RECORDS MAINTAINED IN THE SYSTEM, INCLUDING CATEGORIES OF USERS AND THE PURPOSES OF SUCH USES:

Used by USIA officials to locate a Foreign Service employee; make salary deposits; inform next-of-kin in emergency situations.

Also see Prefatory Statement of General Routine Uses.

Information is made available on a need-to-know basis to personnel of the USIA as may be required in the performance of their official duties. Information in these records is not normally available to individuals or agencies outside the USIA, but records may be released to other Government agencies who have statutory or other lawful authority to maintain such information.

POLICIES AND PRACTICES FOR STORING, RETRIEVING, ACCESSING, RETAINING, AND DISPOSING OF RECORDS IN THE SYSTEM:

STORAGE:

Information maintained on 5 x 8 index card in metal cabinets.

RETRIEVABILITY:

By the Foreign Service employee's name

SAFEGUARDS:

Records are under surveillance by authorized employee during the working hours; in locked metal cabinets after hours.

RETENTION AND DISPOSAL:

Locator information destroyed when employee separates, except by retirement, in which case card maintained indefinitely.

SYSTEM MANAGER AND ADDRESS:

Chief, Foreign Service Personnel Division, USIA, 301 4th Street SW., Washington, DC 20547.

NOTIFICATION PROCEDURES:

Chief, Foreign Service Personnel Division, USIA, 301 4th Street SW., Washington, DC 20547.

RECORD ACCESS PROCEDURE:

Requests from individuals should be addressed to: Director, FOIA/Privacy Act Unit, Office of the General Counsel, USIA, 301 4th Street SW., Washington, DC 20547.

To request another individual's file the requester must have a notarized signed statement from the individual to whom the file pertains.

CONTESTING RECORD PROCEDURES:

The Agency's rules for access and for contesting contents and appealing determinations by the individual concerned appear in 22 CFR part 505.

RECORD SOURCE CATEGORIES:

From the officer concerned; copies of Personnel Action Forms (SF–50); travel memos.

SYSTEM EXEMPTED FROM CERTAIN PROVISIONS OF THE ACT:

Not applicable.

USIA–31

SYSTEM NAME:

Foreign Service Selection Board Files—M/PF.

SYSTEM LOCATION:

Foreign Service Personnel Division, United States Information Agency (USIA), 301 4th Street SW., Washington, DC 20547.

SECURITY CLASSIFICATION:

Confidential.

CATEGORIES OF INDIVIDUALS COVERED BY THE SYSTEM:

Foreign Service employees of the Agency.

CATEGORIES OF RECORDS IN THE SYSTEM:

5 x 8 cards containing data such as name, class, specialty code, position; date OER received by M/P; as appropriate, letters of commendation or low-ranking and comments of the selection boards on foreign service promotions contained in letter files.

AUTHORITY FOR MAINTENANCE OF THE SYSTEM:

Foreign Service Act of 1946, as amended, Sec. 611; 44 U.S.C. 3101 and Foreign Service Act of 1980.

ROUTINE USES OF RECORDS MAINTAINED IN THE SYSTEM, INCLUDING CATEGORIES OF USERS AND THE PURPOSES OF SUCH USES:

Preparation of promotion and limited career extension projections and Foreign Service Officer commissioning actions; used to monitor and control receipt of Officer Evaluation Reports by M/P; used to prepare files and other information for Selection Boards; maybe by Agency's Equal Employment Opportunity Officer, or the Labor Relations Branch (grievance examiners) in the event of an employee grievance.

Also see Prefatory Statement of General Routine Uses.

Information is made available on a need-to-know basis to personnel of the USIA as may be required in the performance of their official duties. The principal user of this information outside USIA is the Director General of the Foreign Service, United States Department of State.

The information may be released to other government agencies who have statutory or other lawful authority to maintain such information.

POLICIES AND PRACTICES FOR STORING, RETRIEVING, ACCESSING, RETAINING, AND DISPOSING OF RECORDS IN THE SYSTEM:

STORAGE:

Paper and card records are in file folders or metal card files. Some material derived from these records has been computerized.

RETRIEVABILITY:

Paper files manually retrieved by individual names and classes; statistical material retrieved from computer base.

SAFEGUARDS:

Paper records maintained in locked file cabinets. Computer material retrieval requires use of appropriate keys. This section adequately describes all safeguards which are applicable to records in the system, including the categories of employees who have access to the records.

RETENTION AND DISPOSAL:

Maintained during period of employment with the Agency; records destroyed upon separation of the employee.

SYSTEM MANAGER AND ADDRESS:

Executive Secretary for the Selection and Commissioning Boards, Foreign Service Personnel Division, USIA, 301 4th Street SW., Washington, DC 20547.

NOTIFICATION PROCEDURE:

Executive Secretary for the Selection and Commissioning Boards, Foreign

Service Personnel Division, USIA, 301 4th Street, SW., Washington, DC. 20547.

RECORD ACCESS PROCEDURE:

Requests from individuals should be addressed to:

Director, FOIA/Privacy Act Unit, Office of the General Counsel, USIA, 301 4th Street, SW., Washington, DC 20547.

To request another individual's file the requester must have a notarized signed statement from the individual to whom the file pertains.

CONTESTING RECORD PROCEDURES:

The Agency's rules for access and for contesting contents and appealing determinations by the individual concerned appear in 22 CFR part 505.

RECORD SOURCE CATEGORIES:

Reports of Selection Boards on the review of pertinent promotion documentation such as officer evaluations; notification of personnel action; foreign service residency and dependency reports; notification to officers of low ranking; materials submitted by officers on their own behalf. All current record sources are included and are correctly stated.

SYSTEMS EXEMPTED FROM CERTAIN PROVISIONS OF THE ACT:

Certain records contained in this system of records may be exempted from 5 U.S.C. 552a (c)(3), (d), (e)(1), (e)(4) (G), (H), (I), and (f). See CFR 505.15.

USIA-32

SYSTEM NAME:

Career Counseling Records—M/PFC.

SYSTEM LOCATION:

Office of Personnel Services, United States Information Agency (USIA), 301 4th Street, SW., Washington, DC 20547.

SECURITY CLASSIFICATION:

None.

CATEGORIES OF INDIVIDUALS COVERED BY THE SYSTEM:

Computer listing of work experience; biographic data; assignment history date; education data; position data; grade; title; post of assignment; date of employment; dependents' proposed position detail to "pipeline" complement; roster of personnel available for domestic assignments; notes of personnel discussions between counselors and individual clients on preferences and other factors bearing on assignments.

AUTHORITY FOR MAINTENANCE OF THE SYSTEM:

The Foreign Service Act of 1980, as amended; 22 U.S.C. 4023.

ROUTINE USES OF RECORDS MAINTAINED IN THE SYSTEM, INCLUDING CATEGORIES OF USERS AND THE PURPOSES OF SUCH USES:

Used by career counselors and personnel officers for assignment, detail or rotation of Agency Foreign Service Officers, within USIA or to other Federal agencies. Also see Prefatory Statement of General Routine Uses.

Information is made available on a need-to-know basis to personnel of the USIA as may be required in the performance of their official duties. The information may also be released to other government agencies who have statutory or other lawful authority to maintain such information.

POLICIES AND PRACTICES FOR STORING, RETRIEVING, ACCESSING, RETAINING, AND DISPOSING OF RECORDS IN THE SYSTEM:

STORAGE:

Card records and paper records in file folders.

RETRIEVABILITY:

By individual name, by date or place of assignment, or both.

SAFEGUARDS:

Maintained in bar-locked file cabinets.

RETENTION AND DISPOSAL:

Biographic data and personnel statistical data subject to update periodically; old records destroyed by shredding when no longer needed or when employee separates.

SYSTEM MANAGER AND ADDRESS:

Career Counselors (5 positions plus Chief of Division), Foreign Service Personnel Division (M/PFC), 301 4th Street SW., Washington, DC 20547.

NOTIFICATION PROCEDURE:

Chief, Foreign Service Personnel Division (M/PFC), USIA, 301 4th Street SW., Washington, DC 20547.

RECORD ACCESS PROCEDURE:

Requests from individuals should be addressed to: Director, FOIA/Privacy Act Unit, Office of the General Counsel, USIA, 301 4th Street SW., Washington, DC 20547.

To request another individual's file the requester must have a notarized signed statement from the individual to whom the file pertains.

CONTESTING RECORD PROCEDURES:

The Agency's rules for access and for contesting contents and appealing determinations by the individual concerned appear in 22 CFR part 505.

RECORD SOURCE CATEGORIES:

Officer Evaluation Reports, Official Personnel File (OPF); records of interviews and correspondence with officer; minutes of meeting of the career management staff held to discuss assignment of Foreign Service Officers.

SYSTEM EXEMPTED FROM CERTAIN PROVISIONS OF THE ACT:

Not applicable.

USIA-33

SYSTEM NAME:

Officer/Specialist Assignment Requests—M/PFC.

SYSTEM LOCATION:

Foreign Service Personnel Division (M/PFC), United States Information Agency (USIA), 301 4th Street SW., Washington, DC 20547.

SECURITY CLASSIFICATION:

None.

CATEGORIES OF INDIVIDUALS COVERED BY THE SYSTEM:

Agency officers who have written or spoken to the Director, Office of Personnel Services, regarding assignment preferences or problems.

CATEGORIES OF RECORDS IN THE SYSTEM:

Letters, memos, and occasionally biographic data submitted by the individual seeking particular assignments; written answers to specific requests.

AUTHORITY FOR MAINTENANCE OF THE SYSTEM:

The Federal Records Act, 44 U.S.C. 3101.

ROUTINE USES OF RECORDS MAINTAINED IN THE SYSTEM, INCLUDING CATEGORIES OF USERS AND THE PURPOSES OF SUCH USES:

Used exclusively by the Director and the Deputy Director, Office of Personnel Services, for discussion of assignments and officer career interests.

Also see Prefatory Statement of General Routine Uses. Information is made available on a need-to-know basis to personnel of the USIA as may be required in the performance of their official duties.

Information in these records is not normally available to individuals or agencies outside the USIA, but records may be released to other government agencies who have statutory or other lawful authority to maintain such information.

POLICIES AND PRACTICES FOR STORING, RETRIEVING, ACCESSING, RETAINING, AND DISPOSING OF RECORDS IN THE SYSTEM:

STORAGE:

Paper records in file folders.

RETRIEVABILITY:

By the name of the individual.

SAFEGUARDS:

Maintained in metal bar-locked file cabinets. System scheduled to be automated in 1990.

RETENTION AND DISPOSAL:

Usually retained until officer is assigned or for longer period depending upon the assignment actions; destroyed when no longer needed.

SYSTEM MANAGER AND ADDRESS:

Chief, Foreign Service Personnel Division (M/PFC), USIA, 301 4th Street SW., Washington, DC 20547.

NOTIFICATION PROCEDURE:

Chief, Foreign Service Personnel Division, USIA, 301 4th Street SW., Washington, DC 20547.

RECORD ACCESS PROCEDURE:

Requests from individuals should be addressed to: Director, FOIA/Privacy Act Unit, Office of the General Counsel, USIA, 301 4th Street SW., Washington DC 20547.

To request another individual's file the requester must have a notarized signed statement from the individual to whom the file pertains.

CONTESTING RECORD PROCEDURES:

The Agency's rules for access and for contesting contents and appealing determinations by the individual concerned appear in 22 CFR part 505.

RECORD SOURCE CATEGORIES:

From the officer requesting assignment consultation; replies of the Director, Office of Personnel Services, to such requests.

SYSTEM EXEMPTED FROM CERTAIN PROVISIONS OF THE ACT:

Not applicable.

USIA-34

SYSTEM NAME:

Advisory, Referral and Counseling Records—M/PPS.

SYSTEM LOCATION:

Office of Personnel Services, United States Information Agency (USIA), 301 4th Street SW., Washington, DC 20547.

SECURITY CLASSIFICATION:

Confidential.

CATEGORIES OF INDIVIDUALS COVERED IN THE SYSTEM:

Employees with serious personal, job related or medical problems such as alcoholism, drug abuse or behavioral problems.

CATEGORIES OF RECORDS IN THE SYSTEM:

Confidential statements relating to specific problems.

AUTHORITY FOR MAINTENANCE OF THE SYSTEM:

Pub. L. 91-616, Section 201 (Comprehensive Alcohol Abuse and Alcoholism Prevention Treatment and Rehabilitation Act of 1970); Pub. L. 92-255, Section 413 (Drug Abuse Treatment Act of 1972).

ROUTINE USES OF RECORDS MAINTAINED IN THE SYSTEM, INCLUDING CATEGORIES OF USERS AND THE PURPOSES OF SUCH USES:

Used on occasion to provide necessary background to medical personnel to arrange for medical examinations, treatment of employees, of for in-house counseling purposes. The program is a confidential resource within the Agency available voluntarily to employees for assistance with personal or job related problems. Employees are advised of rights, obligations as well as benefits available; referrals of employees to professional resources within the government and in the community; continuing on-the-job counseling available.

Also see Prefatory Statement of General Routine Uses.

Without the express written consent of the employee, this information is not available to other personnel of the USIA. The only users of this information outside the USIA are appropriate medical personnel of the Department of State and appropriate health professionals in the community, only with the employee's consent.

POLICIES AND PRACTICES FOR STORING, RETRIEVING, ACCESSING, RETAINING, AND DISPOSING OF RECORDS IN THE SYSTEM:

STORAGE:

Paper records in file folders.

RETRIEVABILITY:

By the name of the individual.

SAFEGUARDS:

Records are maintained in a combination bar-locked cabinet at all times, accessible only to the Advisory, Referral and Counseling personnel.

RETENTION AND DISPOSAL:

Records retained as long as individual is an employee of the Agency; file destroyed by shredding when employee is separated, or when ARCS personnel considers there is no need to retain file, or when incumbent counselor is separated from the Agency; exceptions to rules for retention can be made only with the concerned employee's specific approval.

SYSTEM MANAGER AND ADDRESS:

Chief, Policies and Services Staff (M/PPS), Office of Personnel Services, USIA, 301 4th Street SW., Washington, DC 20547.

NOTIFICATION PROCEDURE:

Chief, Policies and Services Staff, Office of Personnel Services, USIA, 301 4th Street SW., Washington, DC 20547.

RECORD ACCESS PROCEDURE:

Requests from individuals should be addressed to: Director, FOIA/Privacy Act Unit, Office of the General Counsel, USIA, 301 4th Street SW., Washington, DC 20547.

To request another individual's file the requester must have a notarized signed statement from the individual to whom the file pertains.

CONTESTING RECORD PROCEDURES:

The Agency's rules for access and for contesting contents and appealing determinations by the individual concerned appear in 22 CFR part 505.

RECORDS SOURCE CATEGORIES:

Principally from the individual employee concerned; background information provided by the person who initiates referral of the employee, such as supervisors, union representatives, or medical personnel.

SYSTEM EXEMPTED FROM CERTAIN PROVISIONS OF THE ACT:

Not applicable.

USIA-35

SYSTEM NAME:

Incentive Awards File—M/PPS.

SYSTEM LOCATION:

Office of Personnel, Policies and Services, United States Information Agency (USIA), 301 4th Street SW., Washington, DC 20547.

SECURITY CLASSIFICATION:

None.

CATEGORIES OF INDIVIDUALS COVERED BY THE SYSTEM:

Employees who are nominated for Special, Honor, Unit, Cash or other incentive awards; employees who are to receive Length-of-Service Certificates.

CATEGORIES OF RECORDS IN THE SYSTEM:

Nomination forms or narratives; copies of award certificates with citations; cards containing name, award, and date awarded.

AUTHORITY FOR MAINTENANCE OF THE SYSTEM:

3 FAM 640; 5 CFR part 451; FPM chapter 451; MOA V-A/B 570.

ROUTINE USES OF RECORDS MAINTAINED IN THE SYSTEM, INCLUDING CATEGORIES OF USERS AND THE PURPOSES OF SUCH USES:

Used only by awards staff selection committee and approving officials to process and record nominations and for presentation of incentive and length of service awards; used to prepare annual statistical reports for the OPM. Also see Prefatory Statement of General Routine Uses.

Information is made available on a need-to-know basis to personnel of the USIA as may be required in the performance of their official duties.

The information may also be released to other government agencies who have statutory or other lawful authority to maintain such information.

POLICIES AND PRACTICES FOR STORING, RETRIEVING, ACCESSING, RETAINING, AND DISPOSING OF RECORDS IN THE SYSTEM:

STORAGE:

Temporary paper records in file folders.

RETRIEVABILITY:

Manually by name and/or type of award.

SAFEGUARDS:

File folders maintained in locked file cabinets.

RETENTION AND DISPOSAL:

Record cards, a copy of the award nomination and the award certificate, if one was issued, are maintained indefinitely.

SYSTEM MANAGER AND ADDRESS:

Chief, Policies and Services Staff, USIA, 301 4th Street SW., Washington, DC 20547.

NOTIFICATION PROCEDURE:

Chief, Policies and Services Staff, USIA, 301 4th Street SW., Washington, DC 20547.

RECORD ACCESS PROCEDURE:

Requests from individuals should be addressed to: Director, FOIA/Privacy Act Unit, Office of the General Counsel, USIA, 301 4th Street SW., Washington, DC 20547.

To request another individual's file the requester must have a notarized signed statement from the individual to whom the file pertains.

CONTESTING RECORD PROCEDURES:

The Agency's rules for access and for contesting contents and appealing determinations by the individual concerned appear in 22 CFR part 505.

RECORD SOURCE CATEGORIES:

Nominations; supervisors; official personnel folders; awards committee and approving officials.

SYSTEM EXEMPTED FROM CERTAIN PROVISIONS OF THE ACT:

Not applicable.

USIA—36

SYSTEM NAME:

Employee Training Files—M/PT.

SYSTEM LOCATION:

Training and Development Division, Office of Personnel, United States Information Agency (USIA), 330 C Street, SW, Washington, DC 20547.

SECURITY CLASSIFICATION:

None.

CATEGORIES OF INDIVIDUALS COVERED BY THE SYSTEM:

Agency employees receiving training: Workshops, language, lectures or seminars, university or service colleges, personnel and management interns.

CATEGORIES OF RECORDS COVERED BY THE SYSTEM:

Employee training applications, biographic data, educational background, record of training received by the Agency, outline of training program, performance evaluation extracts; language proficiency and test scores, course grade, and employee's evaluation of training courses.

AUTHORITY FOR MAINTENANCE OF THE SYSTEM:

Pub. L. 85–507, 72 Stat. 335, Reorganization Plan No. 8 of 1953, 22 U.S.C. 1461, 67 Stat. 642, Pub. L. 79–724, Foreign Service Act of 1980, as amended, FPM 410, Subchapter 3.

PURPOSE OF THE SYSTEM AND ROUTINE USES OF RECORDS MAINTAINED IN THE SYSTEM, INCLUDING CATEGORIES OF USERS AND THE PURPOSES OF SUCH USES:

Background material used to determine eligibility for training; assignment and progress in language courses; used by career counselors to determine training needs; justification of training reports and record-keeping; evaluation of intern training and potential for job growth; used to evaluate and select lecturers for agency workshops or seminars; preparation of reports to Congress and other government agencies on training provided and costs, as well as projected training needs and costs. Also See Prefatory Statement of General Routine Uses.

Information is made available on a need-to-know basis to personnel of the USIA as may be required in the performance of their official duties.

The principal users of this information outside the Agency are: The Office of Personnel Management; personnel officers in other government agencies as a result of transfer of the individual to whom the records pertain; other agencies considering employees for detail purposes; accredited investigators.

The information may also be released to other government agencies who have statutory or other lawful authority to maintain such information.

POLICIES AND PRACTICES FOR STORING, RETRIEVING, ACCESSING, RETAINING, AND DISPOSING OF RECORDS IN THE SYSTEM:

STORAGE:

Paper records stored in file folders. Computer records stored on magnetic tape or disc.

RETRIEVABILITY:

Manually retrieved by name, by computer generated lists of training statistics or by training course title.

SAFEGUARDS:

1. *Authorized users:* Access to files is limited to only authorized USIA individuals having a substantiated need for the information.

2. *Physical safeguards:* All files are maintained in locked cabinets during non-duty hours and are protected by office personnel when being used during duty hours.

3. *Procedural safeguards:* All users of personal information in connection with the performance of their jobs protect information from public view and from unauthorized personnel entering an unsupervised office. Access to records is strictly limited to those staff members trained in accordance with the Privacy Act.

4. *Implementation guidelines:* Privacy Act guidelines covered in the USIA Manual of Operations and Administration are strictly observed.

RETENTION AND DISPOSAL:

Training records maintained until employee is separated, at which time records are included with official personnel folder; other records are retained indefinitely or until no longer needed; budget records and cost statistics retained indefinitely.

SYSTEM MANAGER AND ADDRESS:

Chief, Training and Development Division (M/PT), Office of Personnel, USIA, 330 C Street, SW, Washington, DC 20201.

NOTIFICATION PROCEDURE:

Chief, Training and Development Division, Office of Personnel, USIA, 330 C Street, SW, Washington, DC 20201.

RECORD ACCESS PROCEDURE:

Requests from individuals should be addressed to: Director, FOIA/Privacy Act Unit, Office of the General Counsel, USIA, 301 4th Street, SW, Washington, DC 20547.

To request another individual's file the requester must have a notarized signed statement from the individual to whom the file pertains.

CONTESTING RECORD PROCEDURES:

The Agency's rules for access and for contesting contents and appealing determinations by the individual concerned appear in 22 CFR PART 505.

RECORD SOURCE CATEGORIES:

The employee; employment applications; official personnel records; personnel action forms; personnel officers; training officers and other officers involved in personnel management; supervisors; training records; application for training; trainee evaluations of courses.

SYSTEM EXEMPTED FROM CERTAIN PROVISIONS OF THE ACT:

Certain records contained within this system of records may be exempted from 5 U.S.C. 552a(c)(3), (d), (e)(1), (e)(4)(G), (H), (I), and (f). See 22 CFR 505.15.

USIA-37

SYSTEM NAME:

Personnel Security and Integrity Records—M/S.

SECURITY CLASSIFICATION:

Most records are unclassified, but include records classified confidential, secret and top secret.

SYSTEM LOCATION:

Office of Security, United States Information Agency (USIA), 301 4th Street SW, Washington, DC, 20547. Retired records stored at Washington National Records Center, 4205 Suitland Road, Suitland, Maryland, 20409.

CATEGORIES OF INDIVIDUALS COVERED BY THE SYSTEM:

All persons currently or formerly employed by USIA in the United States; all Americans currently or formerly employed by USIA in other countries; some but not all foreign nationals currently or formerly employed in other countries; some but not all persons currently or formerly used under contract, both in the United States and in other countries; some persons whose services are or were otherwise utilized by USIA, whether compensated or not; some former applicants who were not employed; some prospective spouses of USIA employees; some other persons who were significantly identified with persons whose services were at one time utilized or considered in one or more of the capacities described herein; some persons who were significantly involved in non-security related administrative inquiries conducted by M/S; some persons of counterintelligence interest whose names appeared in the press, or are contained in documents furnished by other agencies of the U.S. Government.

CATEGORIES OF RECORDS IN THE SYSTEM:

Application and security forms provided by subject of records; reports of investigation conducted by M/S, and by other Government agencies; Personnel Security Worksheet Records evaluating investigative material; security clearance and security certification forms; intra-office, intra-Agency and inter-agency correspondence relating to investigations, security and suitability determinations, and administrative matters; correspondence to and from federal law enforcement and counterintelligence agencies; correspondence to and from state and local law enforcement jurisdictions, credit bureaus, private employers, schools, and individuals relating to investigative inquiries; records regarding briefings and debriefings, security certifications to other agencies, contact reports, and security violations; photographs, Cross Reference Sheets, and Records of Release of Information; records from Security Identification Card System (USIA-38) concerning former employees; not all files, however, contain all of the above elements.

AUTHORITY FOR MAINTENANCE OF THE SYSTEM:

The authority of M/S to collect and maintain security data is based on Section 1001 of the United States Information and Education Act of 1948, 62 Stat. 13, 22 U.S.C. 1434, as amended, 66 Stat. 43, (1952); Reorganization Plan No. 8 of 1953, 67 Stat. 642; Executive Order 10477 of August 1, 1953, as amended; the Act of August 26, 1950, 64 Stat. 476; 5 U.S.C.A. 3571, 7312, 7501, 7412 and 7532; Executive Order 10450 of April 27, 1953, as amended; Executive Order 12048 of March 27, 1978; the Act of August 24, 1982, 96 Stat. 291, and Executive Order 12356 of April 2, 1982; the authority of M/S to collect and maintain certain administrative data, as an investigative arm of the USIA, is based on 22 U.S.C. 1434; the Foreign Service Act of 1946, Sec. 611; Reorganization Plan No. 8; Executive Order 10477, and 5 U.S.C. Chap. 33.

PURPOSES OF THE SYSTEM:

To collect and maintain record information necessary to make security and suitability determinations regarding applicants for employment with and employees of the USIA; make security determinations regarding the advisability of assigning certain employees to certain areas of the world, or to certain positions within the USIA domestically; make security determinations regarding the advisability of certain promotions, as required by USIA regulations; make determinations regarding the advisability of granting employees special clearances, as required for certain jobs; make determinations regarding the effect on an employee's security clearance of marriage to a non-U.S. citizen; make determinations whether certain non-citizen employees of USIA abroad should be granted security certification; disclose information to the Office of Inspector General as necessary for that office to carry out its investigative and other responsibilities; disclose information to certain officials of the Office of Personnel and other USIA elements, as necessary for them to make required decisions.

Records are used by the Director and Deputy Director of M/S as reference in contacts and correspondence with USIA Director, Deputy Director, General Counsel, Associate Directors, and other Agency officials when necessary to resolve specific personnel security matters.

ROUTINE USES OF RECORDS MAINTAINED IN THE SYSTEM INCLUDING CATEGORIES OF USERS AND THE PURPOSES OF SUCH USES:

Data may be disclosed to Foreign Service Board of Examiners as necessary to determine qualifications and suitability of an applicant; data may be disclosed to the Department of State, Office of Medical Services, as necessary to determine whether applicant or employee should be granted or retain medical clearance; data may be disclosed to other Government agencies as necessary for those agencies to determine whether employees should be granted special clearances required in connection with USIA duties; relevant data may be disclosed in advising duly authorized security officers of other agencies of significant security information in the file of a USIA employee or applicant; relevant data

may be disclosed in advising the Office of Personnel Management that significant security or suitability information was developed or obtained regarding an applicant or employee; USIA investigative material having counterintelligence significance may be disclosed to other U.S. Government agencies with responsibilities in that area; records may be used by the Director of M/S in correspondence and contacts with officials of other Government agencies when it becomes necessary to inform them of information available in the USIA Office of Security.

Also see Prefatory Statement of General Routine Uses.

POLICIES AND PRACTICES FOR STORING, RETRIEVING, ACCESSING, RETAINING, AND DISPOSING OF RECORDS IN THE SYSTEM:

STORAGE:

Paper records kept in file folders.

RETRIEVABILITY:

By name of individual to whom record pertains, and number assigned (chronologically) to each file. Names are filed alphabetically in card index, and index cards provide file numbers.

SAFEGUARDS:

Authorized Users: Employees of the Records Unit, and all other employees of M/S with exception of Guard Staff.

Physical safeguards: Files are maintained in secure room which during duty hours is staffed by Records Unit personnel. Room is locked and alarmed during non-duty hours. Files in possession of other authorized users are kept in approved safe or locked cabinets when not in use and during non-duty hours. Entire building is secured during non-duty hours, and security guards patrol.

Procedural (or technical) safeguards: Records Unit personnel furnish files to other authorized users in exchange for properly executed "Chargeout Record" form. Records Unit is provided properly executed "Recharge" form if file is passed from one authorized user to another. All personnel having access to records have top secret security clearances.

Citation of Implementing Guidelines: Volume 5, Foreign Affairs Manual, Chapter 900, and Privacy Act of 1974 (5 U.S.C. 552a).

Top secret records are maintained separately in accordance with provisions of Executive Order 12356 and 5 FAM 900.

RETENTION AND DISPOSAL:

Files pertaining to employees and others whose relationship with USIA required security clearance or certification may be transferred to Washington National Records Center after individual leaves Agency. Records may be destroyed twenty years after date of separation; files pertaining to individuals whose services were used on a part-time basis, and whose relationship with USIA required security certification, may be destroyed ten years after date of last action or when file becomes inactive, whichever is sooner; files pertaining to unsuccessful applicants may be transferred to Washington National Records Center 120 days after non-selection, and destroyed ten years after date of last action; index and cross-index cards may be destroyed as files are destroyed; all destruction under appropriate security controls.

SYSTEM MANAGER AND ADDRESS:

Director, Office of Security, USIA, 301 4th Street SW.; Washington, DC 20547.

NOTIFICATION PROCEDURES:

Persons wishing to determine whether system contains records about themselves should write to the Director of Security, USIA, 301 4th Street SW., Washington, DC 20547.

Individuals making inquiry should provide full name, including name(s) while affiliated with or when the applicant was with USIA, and date and place of birth.

RECORD ACCESS PROCEDURES:

Persons requesting access should furnish full name, including name(s) while affiliated with or when applicant was with USIA, date and place of birth, present mailing address including zip code, and telephone number (optional) to the Director, FOIA/Privacy Act Unit, Office of the General Counsel, USIA, 301 4th Street, SW., Washington, DC 20547.

To request another individual's file the requester must have a notarized signed statement from the individual to whom the file pertains.

CONTESTING RECORD PROCEDURES:

The Agency's rules for access and for contesting contents and appealing determinations by the individual concerned appear in 22 CFR part 505. The right to contest records is limited to information which is incomplete, irrelevant, incorrect or untimely.

RECORD SOURCE CATEGORIES:

Biographic and personal history information furnished voluntarily by the subject individual on application and security forms; the subject individual during personal interviews; reports of investigation conducted by M/S; reports of investigation conducted by the Office of Personnel Management, Department of State, Federal Bureau of Investigation, and other Government agencies; other federal agencies, state and local law enforcement agencies, credit bureaus, current and former employers, supervisors, co-workers, schools, teachers, rental and real estate agencies, landlords, neighbors, references and other acquaintances; records of professional organizations, baptismal records and medical records; counterintelligence reports relating to USIA interests which are furnished by other Federal agencies; various public records and indices such as those produced by committees of Congress; other elements of USIA; employees of USIA, employees of other Government agencies, nongovernment entities, and members of the public at large who occasionally furnish information to M/S in the interests of national security or the integrity of the Federal service; photographs from Security Identification Card File (USIA–39).

SYSTEM EXEMPTED FROM CERTAIN PROVISIONS OF THE (PRIVACY) ACT:

Records in this system of the types described in 5 U.S.C. 552a (k)(1), (k)(2) and (k)(5) may be exempted from 5 U.S.C. 552a (c)(3), (d), (e)(1), (e)(4)(G), (e)(4)(H), (e)(4)(I) and/or (f). See CFR 505.15.

USIA–38

SYSTEM NAME:

Security Identification Card and Automated Access Control File M/S.

SECURITY CLASSIFICATION:

All records are unclassified.

SYSTEM LOCATION:

Office of Security, United States Information Agency (USIA), 301 4th Street SW., Washington, DC 20547.

CATEGORIES OF INDIVIDUALS COVERED BY THE SYSTEM:

Current employees of USIA, some contractors, members of advisory committees, student interns, and persons on detail from other Government agencies. System also contains photographs of dependents of some employees traveling overseas.

CATEGORIES OF RECORDS IN THE SYSTEM:

Identification card, Social Security number, date of birth, full face photograph, authorized access in USIA buildings.

AUTHORITY FOR MAINTENANCE OF THE SYSTEM:

Executive Order 10450 dated April 27, 1953, as amended, and Executive Order 12356 dated April 2, 1982.

PURPOSES OF THE SYSTEM:

Provide positive identification of employees, contractors and others for entry into and movement within USIA premises.

Provide passport and visa photographs to employees and their dependents for use during official travel.

Provide photographs for use by the Office of Public Liaison and other USIA elements having official need for visual identification records.

Provide photographs to employees for other official uses. Provide automated records of access to select areas/facilities within USIA buildings.

ROUTINE USES OF RECORDS MAINTAINED, INCLUDING CATEGORIES OF USERS AND THE PURPOSES OF SUCH USES:

Employees may use identification cards to verify USIA employment when seeking entry to other U.S. Government agencies with which they have official business.

Disclosure may be made to other Government agencies having statutory authority or other lawful authority to receive such information.

Also see Prefatory Statement of General Routine Uses.

POLICIES AND PRACTICES FOR STORING, RETRIEVING, ACCESSING, RETAINING, AND DISPOSING OF RECORDS IN THE SYSTEM:

STORAGE:

Paper records and photographs kept in envelopes, and automated data system with magnetic tape for backup.

RETRIEVABILITY:

By name, Social Security number and/or ID card number of individual to whom record pertains.

SAFEGUARDS:

Authorized Users: Employees of the ID unit, their supervisors and authorized investigative personnel.

PHYSICAL SAFEGUARDS:

Records and photographs are stored in closeable steel cabinets located in rooms with limited access during duty hours. During non-duty hours, the rooms are locked and alarmed.

Procedural (or Technical) Safeguards: Computer log-on codes and passwords are required to access automated records.

Citation of Implementing Guidelines: Manual of Operations and Administration, and Privacy Act of 1974 (5 U.S.C. 552a).

RETENTION AND DISPOSAL:

Records remain in system as long as person to whom they pertain is employeed by or affiliated with USIA. Records of former employees are placed in Personnel Security and Integrity Records (USIA–37) and retained and destroyed with those records. Records of others are destroyed when affiliation with USIA ends. All destruction under appropriate security controls.

SYSTEM MANAGER AND ADDRESS:

Director, Office of Security, USIA, 301 4th Street, SW., Washington, DC, 20547.

NOTIFICATION PROCEDURES:

Persons wishing to determine whether system contains records about themselves should write to the Director of Security, USIA, 301 4th Street, SW., Washington, DC 20547.

Individuals making inquiry should provide full name, date of birth, and date last affiliated with USIA.

RECORD ACCESS PROCEDURES:

Persons requesting access should furnish full name, date of birth, present mailing address including zip code, and telephone number (optional) to the Director, FOI/Privacy Act Unit, USIA, 301 4th Street, SW., Washington, DC 20547.

Office of Security may request documentary proof of identity if it has reason to question whether requester is subject of record.

Subject of record may request an accounting of disclosures.

CONTESTING RECORD PROCEDURES:

The Agency's rules for access and for contesting contents and appealing determinations by the individual concerned appear in 22 CFR part 505. The right to contest, records is limited to information which is incomplete, irrelevant, incorrect or untimely.

RECORD SOURCE CATEGORIES:

Personnel Security and Integrity Records (USIA–37) with verification from the subject individual.

SYSTEM EXEMPTED FROM CERTAIN PROVISIONS OF THE (PRIVACY) ACT:

Not applicable.

USIA–39

SYSTEM NAME:

Criminal Investigative Files of the Inspector General—OIG/V.

SYSTEM LOCATION:

Office of Investigations, Office of Inspector General, United States Information Agency (USIA), 400 6th Street, SW., Room 3700, washington, DC 20547.

SECURITY CLASSIFICATION:

None for the system. Portions of the records within the system are classified at the levels of Confidential and Secret.

CATEGORIES OF INDIVIDUALS COVERED BY THE SYSTEM:

Employees, former employees, grantees, contractors, sub-contractors, participants and recipients under USIA programs and others doing business with the Agency.

CATEGORIES OF RECORDS IN THE SYSTEM:

Criminal investigative files.

AUTHORITY FOR MAINTENANCE OF THE SYSTEM:

Inspector General Act of 1978, Pub. L. 95–452, as amended; 18 U.S.C.

ROUTINE USES OF RECORDS IN THE SYSTEM INCLUDING CATEGORIES OF USERS AND THE PURPOSES OF SUCH USES:

Pursuant to Public Law 95–452, as amended, this system is maintained for the purposes of conducting and documenting investigations conducted by OIG or other investigative agencies regarding USIA programs and operations, documenting the outcome of OIG review of allegations and complaints received concerning USIA programs and operations, aiding in prosecutions brought against the subjects of OIG investigations, maintaining a record of the activities which were the subject of investigations, reporting the results of investigations to other Agency components for their use in operating and evaluating their programs and in imposition of civil or administrative sanctions, and acting as a repository and source for information necessary to fulfull reporting requirements.

(1) In the event that this system of records, maintained by this Agency to carry out its functions, indicates a violation or potential violation of law, whether civil, criminal or regulatory in nature, whether arising by general statute or particular program statute, or by regulation, rule or order issued pursuant thereto, the relevant records in the system of records may be referred, as a routine use, to the appropriate agency, whether federal, foreign, state, or local, charged with the responsibility of investigating or prosecuting such violation or charged with enforcing or implementing the statute, or rule, regulation or order issued pursuant thereto.

(2) Disclosures may be made to federal, foreign, state, or local agencies where disclosure is necessary in order to obtain records relevant and necessary to a criminal, civil or administrative investigation of the Office of Inspector General.

(3) Disclosures may be made to a federal agency where records in this system of records pertain to an

applicant for employment, or to a current employee of that agency where the records are relevant and necessary to an agency decision with regard to the hiring or retention of an employee or disciplinary or other administrative action concerning an employee. Disclosures may be made to a federal agency in response to its request in connection with the issuance of a security clearance, the award of a contract, or the issuance of a license, grant, or other benefit by the requesting agency to the extent that the record is relevant and necessary to the requesting agency's decision on the matter.

(4) Disclosures may be made to the Office of Personnel Management or the Merit Systems Protection Board (including the Office of Special Counsel) of information relevant and necessary to carrying out their functions.

(5) Disclosures may be made to third party contacts where the party contacted may have information needed to establish or verify information relevant and necessary to a criminal, civil or administrative investigation by the OIG.

(6) Disclosures may be made to federal, foreign, state, and local agencies, or to other entities administering federally funded programs where necessary for them to take action based on an OIG investigation or audit.

(7) Disclosures may be made when the Agency contemplates that it will contract with private firms for the purpose of collating, analyzing, aggregating or otherwise refining records. Disclosures will also be made to independent auditors who by contract carry out audits on behalf of the Agency. Such contractors will be required to maintain Privacy Act safeguards with respect to such records.

(8) Where federal agencies having the power to subpoena other federal agencies' records, such as the Internal Revenue Service or the Civil Rights Commission, issue a subpoena to the Agency for records in this system of records, the Agency will make such records available.

(9) In the event the Agency deems it desirable or necessary, in determining whether particular records are required to be disclosed under the Freedom of Information Act, disclosure may be made to the Department of Justice for the purpose of obtaining its advice.

(10) In the event of litigation where the defendant is (a) the Agency, any component of the Agency, or any employee of the Agency in his or her official capacity; (b) the United States where the Agency determines that the claim, if successful, is likely to directly affect the operations of the Agency or any of its components or (c) any Agency employee in his or her individual capacity where the Justice Department has agreed to represent such employee, the Agency may disclose such records as it deems necessary to the Department of Justice to enable that Department to present an effective defense.

(11) Disclosure may be made to a congressional office from the record of an individual in response to an inquiry from the congressional office made at the request of that individual.

DISCLOSURE TO CONSUMER REPORTING AGENCIES:

None.

POLICIES AND PRACTICES FOR STORING, RETRIEVING, ACCESSING, RETAINING, AND DISPOSING OF RECORDS IN THE SYSTEM:

STORAGE:

The records are maintained in security type vaults or safes or lock bar file cabinets with manipulation proof combination locks.

RETRIEVABILITY:

The records are retrieved by manual search of alphabetical name indices. Indices list names of individuals, companies and organizations.

SAFEGUARDS:

Persons having access are security-cleared and must establish a "need to know" the information under routine use policies and practices established by statute, executive order, and agency regulation. When not in personal custody, records are stored in combination-locked containers or in a security area.

RETENTION AND DISPOSAL:

Investigative files are retained for 10 years after completion of the investigation and/or actions based thereon. Index cards are retained permanently.

SYSTEM MANAGER AND ADDRESS:

Assistant Inspector General for Investigations, Office of Inspector General, OIG/V, USIA, 400 6th Street, SW., Room 3700, Washington, DC 20547.

NOTIFICATION PROCEDURE:

Exempt. However, consideration will be given requests addressed to the system manager. For general inquiries, include the name and date of birth, and employment or other affiliation with the Agency.

RECORD ACCESS PROCEDURE:

Same as notification procedures. Requestors should also reasonably specify the record contents being sought.

CONTESTING RECORD PROCEDURES:

Exempt. However, consideration will be given requests addressed to the system manager. Requests for correction should reasonably identify the record and specify the information to be contested, the corrective action sought and the reasons for the correction with supporting justification.

RECORD SOURCE CATEGORIES:

Agency and other foreign, federal, state, and local government records; interviewers of witnesses; documents and other material furnished by non-government sources. Sources may include confidential sources.

SYSTEMS EXEMPTED FROM CERTAIN PROVISIONS OF THE ACT:

Records in the system may be determined to be exempt from release under paragraphs (k)(1), (k)(2), (k)(5) and (k)(6) of Section 552a.

USIA—40

SYSTEM NAME:

Speaker Databank/Name—P/D.

SYSTEM LOCATION:

Directorate for Programs, United States Information Agency (USIA), 301 4th Street, SW, Washington, DC 20547.

SECURITY CLASSIFICATION:

None.

CATEGORIES OF INDIVIDUALS COVERED BY THE SYSTEM:

American specialists and experts in a variety of fields who have participated or been considered for participation in the American Participant Program.

CATEGORIES OF RECORDS IN THE SYSTEM:

A typical file contains the following information on or about speakers and prospective speakers in the American Participant Program administered by USIA: Biographic data including education and professional experience, countries visited, travel dates, Grant Authorization number and type, cost, fiscal year, correspondence between the speaker and P/D, and communications between the Agency and its overseas posts regarding the speaker's participation in the program.

AUTHORITY FOR MAINTENANCE OF THE SYSTEM:

Executive Order 11034, as amended.

ROUTINE USES OF RECORDS MAINTAINED IN THE SYSTEM, INCLUDING CATEGORIES OF USERS AND THE PURPOSES OF SUCH USES:

Speakers Databank is maintained as a historical record of the American Participant program. Both the Speaker

Databank and the files are used routinely by program development officers, program assistants and clerical personnel in the daily conduct of the American Participant program. They are occasionally consulted by other Agency personnel for such purposes as preparing advance publicity on speakers who will lecture abroad under USIA auspices.

Also see Prefatory Statement of General Routine Uses.

Information is made available on a need-to-know basis to personnel of the USIA as may be required in the performance of their official duties.

Information in these records is not normally available to individuals or agencies outside the USIA but records may be released to other government agencies who have statutory or other lawful authority to maintain such information.

POLICIES AND PRACTICES FOR STORING, RETRIEVING, ACCESSING, RETAINING, AND DISPOSING OF RECORDS IN THE SYSTEM:

STORAGE:

The Speaker Databank is maintained on a personal computer. The files are stored in individual folders by name and consist of the types of information specified under "Catagories of Records".

RETRIEVABILITY:

Information can be retrieved from the Speaker Databank as needed. File folders are indexed alphabetically by name.

SAFEGUARDS:

The files are kept in locked file cabinets and, when open during office hours, are always tended by one or more employees. Only appropriate personnel are allowed to consult these files routinely. Other Agency personnel interested are allowed to consult them only for legitimate speaker recruitment activities. U.S. Government personnel other than USIA very rarely seek access to these files. When they do, they are asked to produce specific identification and justification.

RETENTION AND DISPOSAL:

These records are normally maintained for approximately 3 years. Afterward, they are retired to the USIA archives for a period of from 5–7 years.

SYSTEM MANAGER AND ADDRESS:

Associate Director for Programs, USIA, 301 4th Street, SW, Washington, DC 20547.

NOTIFICATION PROCEDURE:

Associate Director for Programs, USIA, 301 4th Street, SW, Washington, DC 20547.

RECORD ACCESS PROCEDURE:

Requests from individuals should be addressed to: Director, FOIA/Privacy Act Unit, Office of the General Counsel, USIA, 301 4th Street, SW, Washington, DC 20547.

To request another individual's file the requester must have a notarized signed statement from the individual to whom the file pertains.

CONTESTING RECORD PROCEDURES:

The Agency's rules for access and for contesting contents and appealing determinations by the individual concerned appear in 22 CFR part 505.

RECORD SOURCE CATEGORIES:

Without significant exceptions, the information on individuals maintained in these files has come from the individual concerned or, occasionally, from others at the request of that individual.

SYSTEMS EXEMPTED FROM CERTAIN PROVISIONS OF THE ACT:

Not applicable.

USIA—41

SYSTEM NAME:

Exhibit Specialist Grantees—P/E.

SYSTEM LOCATION:

Exhibits Service, United States Information Agency (USIA), 400 6th Street, SW, Washington, DC 20547.

SECURITY CLASSIFICATION:

None.

CATEGORIES OF INDIVIDUALS COVERED BY THE SYSTEM:

Private individuals under grant or contractual agreement with the Agency, or government employees on temporary duty assignments with USIA, to provide services to Agency exhibits as expert specialists, usually involving overseas travel.

CATEGORIES OF RECORDS IN THE SYSTEM:

Name, address, itinerary of travel, description of services, records of security clearance and of grants or orders, resume of career and list of publications, correspondence, informal evaluations of performance as an exhibit specialist, photographs, publications by the concerned individuals.

AUTHORITY FOR MAINTENANCE OF THE SYSTEM:

Executive Order 11034, as amended.

ROUTINE USES OF RECORDS MAINTAINED IN THE SYSTEM, INCLUDING CATEGORIES OF USERS AND THE PURPOSES OF SUCH USES:

Used for the purpose of selecting specialists in various fields to assist in the design of exhibits for use overseas; as consultants during fabrication of exhibits; to assist USIA personnel overseas to construct exhibits.

Also see Prefatory Statement of General Routine Uses.

Information is made available on a need-to-know basis to personnel of the USIA as may be required in the performance of their official duties.

Information in these records is not normally available to individuals or agencies outside the USIA, but records may be released to other government agencies who have statutory or other lawful authority to maintain such information.

POLICIES AND PRACTICES FOR STORING, RETRIEVING, ACCESSING, RETAINING, AND DISPOSING OF RECORDS IN THE SYSTEM:

STORAGE:

Paper records in file folders.

RETRIEVABILITY:

By show name, the word "specialist," followed by individual's name.

SAFEGUARDS:

Records maintained in bar-locked cabinets.

RETENTION AND DISPOSAL:

Records kept as long as individual is of employment interest and/or employed. Files are destroyed by burning when no longer needed

SYSTEM MANAGER AND ADDRESS:

Records Control Officer, Creative Services Branch, Exhibits Service, USIA, 400 6th Street, SW, Washington, DC 20547.

NOTIFICATION PROCEDURE:

Director, Exhibits Service, USIA, 400 6th Street, SW, Washington, DC 20547.

RECORD ACCESS PROCEDURE:

Requests from individuals should be addressed to: Director, FOIA/Privacy Act Unit, Office of the General Counsel, USIA, 301 4th Street, SW, Washington, DC 20547.

To request another individual's file the requester must have a notarized signed statement from the individual to whom the file pertains.

CONTESTING RECORD PROCEDURES:

The Agency's rules for access and for contesting contents and appealing determinations by the individual concerned appear in 22 CFR part 505.

RECORD SOURCE CATEGORIES:

Information included in records was either submitted or authorized by the individual concerned, or was available

from public sources, such as book reviews or material printed in various publications; National Agency name check information is obtained through the Agency's Office of Security.

SYSTEMS EXEMPTED FROM CERTAIN PROVISIONS OF THE ACT:

Not applicable.

USIA—42

SYSTEM NAME:

Guide Training File—P/E.

SYSTEM LOCATION:

Exhibits Service, United States Information Agency (USIA), 400 6th Street, SW, Washington, DC 20547.

SECURITY CLASSIFICATION:

None.

CATEGORIES OF INDIVIDUALS COVERED BY THE SYSTEM:

Translators and various instructors hired periodically by the Exhibits Service to train Exhibit Guides before assignment overseas.

CATEGORIES OF RECORDS IN THE SYSTEM:

Biographic data, security name-check forms, history of assignments with the Agency, and routine correspondence.

AUTHORITY FOR MAINTENANCE OF THE SYSTEM:

Executive Order 11034, as amended.

ROUTINE USES OF RECORDS MAINTAINED IN THE SYSTEM, INCLUDING CATEGORIES OF USERS AND THE PURPOSES OF SUCH USES:

A ready reference file for locating specialists and translators, evaluating their qualifications and determining their availability to train individuals hired by the Agency for overseas assignments as Exhibit Guides.

Also see Prefatory Statement of General Routine Uses.

Information is made available on a need-to-know basis to personnel of the USIA as may be required in the performance of their official duties.

Information in these records is not normally available to individuals or agencies outside the USIA but records may be released to other government agencies who have statutory or other lawful authority to maintain such information.

POLICIES AND PRACTICES FOR STORING, RETRIEVING, ACCESSING, RETAINING, AND DISPOSING OF RECORDS IN THE SYSTEM:

STORAGE:

Paper records in file folders.

RETRIEVABILITY:

By name of the individual.

SAFEGUARDS:

Records maintained in bar-locked cabinets, available only to authorized personnel.

RETENTION AND DISPOSAL:

Records kept as long as person is of employment interest and/or employed. Files are destroyed by burning when no longer needed.

SYSTEM MANAGER AND ADDRESS:

Records Control Officer, Creative Services Branch, Exhibits Service, USIA, 400 6th Street, SW, Washington, DC 20547.

NOTIFICATION PROCEDURE:

Director, Exhibits Service, USIA, 400 6th Street, SW, Washington, DC 20547.

RECORD ACCESS PROCEDURE:

Requests from individuals should be addressed to: Director, FOIA/Privacy Act Unit, Office of the General Counsel, USIA, 301 4th Street, SW, Washington, DC 20547.

To request another individual's file the requester must have a notarized signed statement from the individual to whom the file pertains.

CONTESTING RECORD PROCEDURES:

The Agency's rules for access and for contesting contents and appealing determinations by the individual concerned appear in 22 CFR part 505.

RECORD SOURCE CATEGORIES:

Information included in these records is submitted or authorized by the individual concerned and is available for her/his review.

SYSTEMS EXEMPTED FROM CERTAIN PROVISIONS OF THE ACT:

Not applicable.

USIA—43

SYSTEM NAME:

Photographers and Photographs for Exhibits Use—P/E.

SYSTEM LOCATION:

Exhibits Service, United States Information Agency (USIA), 400 6th Street, SW, Washington, DC 20547.

SECURITY CLASSIFICATION:

None.

CATEGORIES OF INDIVIDUALS COVERED BY THE SYSTEM:

Names and addresses of photographers hired by the Exhibits Service to provide photographs suitable for use in the Agency's overseas Exhibits Program, collection of photographs for possible use in Exhibits program with the names and addresses of the individuals holding copyrights.

CATEGORIES OF RECORDS IN THE SYSTEM:

Correspondence with individuals concerning employment with the Exhibits Service to perform photographic services, personal data on photographers such as name, address, telephone number, price charged for service, specialties, availability of rights, previous USIA assignments, evaluation of photographer's work, names and addresses of persons owning rights to photographic work considered suitable for overseas exhibits.

AUTHORITY FOR MAINTENANCE OF THE SYSTEM:

Executive Order 11034, as amended.

ROUTINE USES OF RECORDS MAINTAINED IN THE SYSTEM, INCLUDING CATEGORIES OF USERS AND THE PURPOSES OF SUCH USES:

To acquire existing pictures, to select photographers for specific assignments, for general photo research, for use in the Agency's Exhibits Program.

Also see Prefatory Statement of General Routine Uses.

Information is made available on a need-to-know basis to personnel of the USIA as may be required in the performance of their official duties.

Information in these records is not normally available to individuals or agencies outside the USIA but records may be released to other government agencies who have statutory or other lawful authority to maintain such information.

POLICIES AND PRACTICES FOR STORING, RETRIEVING, ACCESSING, RETAINING, AND DISPOSING OF RECORDS IN THE SYSTEM:

STORAGE:

Paper records and photographs maintained in file folders.

RETRIEVABILITY:

By name of individual.

SAFEGUARDS:

Maintained in combination bar-locked cabinets.

RETENTION AND DISPOSAL:

Records kept as long as person's photographs are of interest for use in particular exhibits. Files are destroyed by burning when no longer needed.

SYSTEM MANAGER AND ADDRESS:

Records Control Officer, Creative Services Branch, Exhibits Service, USIA, 400 6th Street SW., Washington, DC 20547.

NOTIFICATION PROCEDURE:

Director, Exhibits Service, USIA 400 6th Street SW., Washington, DC 20547.

RECORD ACCESS PROCEDURE:

Requests from individuals should be addressed to: Director, FOIA/Privacy Act Unit, Office of the General Counsel, USIA, 301 4th Street SW., Washington, DC 20547.

To request another individual's file the requester must have a notarized signed statement from the individual to whom the file pertains.

CONTESTING RECORD PROCEDURES:

The Agency's rules for access and for contesting contents and appealing determinations by the individual concerned appear in 22 CFR part 505.

RECORD SOURCE CATEGORIES:

Information included in these records was either submitted or authorized by the individual concerned or was available from public sources, such as book reviews or material printed in various publications; National Agency name check information is obtained through the Agency's Office of Security.

SYSTEMS EXEMPTED FROM CERTAIN PROVISIONS OF THE ACT:

Not applicable.

USIA-45

SYSTEM NAME:

Press Service Photo File—P/P.

SYSTEM LOCATION:

Press and Publications Service, United States Information Agency (USIA), 301 4th Street SW., Washington, DC 20547.

SECURITY CLASSIFICATION:

None.

CATEGORIES OF INDIVIDUALS COVERED BY THE SYSTEM:

Prominent Americans.

CATEGORIES OF RECORDS IN THE SYSTEM:

Photographs of prominent Americans.

AUTHORITY FOR MAINTENANCE OF THE SYSTEM:

Federal Records Act of 1950, as amended, 44 U.S.C. 3101.

ROUTINE USES OF RECORDS MAINTAINED IN THE SYSTEM, INCLUDING CATEGORIES OF USERS AND THE PURPOSES OF SUCH USES:

For use in Agency's overseas information program. Also see Prefatory Statement of General Routine Uses. Information is made available on a need-to-know basis to personnel of the USIA but records may be released to other government agencies who have statutory or other lawful authority to maintain such information

POLICIES AND PRACTICES FOR STORING, RETRIEVING, ACCESSING, RETAINING, AND DISPOSING OF RECORDS IN THE SYSTEM:

STORAGE:

Index cards, mounted and unmounted prints, negatives and transparencies.

RETRIEVABILITY:

Indexed alphabetically by individual name.

SAFEGUARDS:

Maintained in locked file cabinets.

RETENTION AND DISPOSAL:

Files retained indefinitely or until no longer useful; outdated pictures retired to National Archives.

SYSTEM MANAGER AND ADDRESS:

Director, Press and Publications Service, USIA 301 4th Street SW., Washington, DC 20547.

NOTIFICATION PROCEDURE:

Director, Press and Publications Service, USIA, 301 4th Street SW., Washington, DC 20547.

RECORD ACCESS PROCEDURE:

Requests from individuals should be addressed to: Director, FOIA/Privacy Act Unit, Office of the General Counsel, USIA, 301 4th Street SW., Washington, DC 20547.

To request another individual's file the requester must have a notarized signed statement from the individual to whom the file pertains.

CONTESTING RECORD PROCEDURES:

The Agency's rules for access and for contesting contents and appealing determinations by the individual concerned appear in 22 CFR part 505.

RECORD SOURCE CATEGORIES:

Photographs taken by USIA photographers or obtained from various outside commercial and free sources.

SYSTEMS EXEMPTED FROM CERTAIN PROVISIONS OF THE ACT:

Not applicable.

USIA-45

SYSTEM NAME:

Press Service Photographer File—P/P.

SYSTEM LOCATION:

Press and Publications Service, United States Information Agency (USIA), 301 4th Street SW., Washington, DC 20547.

SECURITY CLASSIFICATION:

None.

CATEGORIES OF INDIVIDUALS COVERED BY THE SYSTEM:

Free-lance photographers and picture agents.

CATEGORIES OF RECORDS IN THE SYSTEM:

Personal data on free-lance photographers and picture agents such as name, address, telephone number, prices charged for products and services, specialties, availability of rights, evaluations of previous USIA assignments and purchases.

AUTHORITY FOR MAINTENANCE OF THE SYSTEM:

Federal Records Act of 1950, as amended, 44 U.S.C. 3101.

ROUTINE USES OF RECORDS MAINTAINED IN THE SYSTEM, INCLUDING CATEGORIES OF USERS AND THE PURPOSES OF SUCH USES:

To select photographers for specific assignments; to acquire existing pictures; for general photo research—all for use in the Agency's overseas information program. Also see Prefatory Statement of General Routine Uses.

Information is made available on a need-to-know basis to personnel of the USIA but records may be released to other government agencies who have statutory or other lawful authority to maintain such information.

POLICIES AND PRACTICES FOR STORING, RETRIEVING, ACCESSING, RETAINING, AND DISPOSING OF RECORDS IN THE SYSTEM:

STORAGE:

Card file and paper records in file folders.

RETRIEVABILITY:

Indexed alphabetically by individual name.

SAFEGUARDS:

Maintained in desk drawers and locked file cabinets.

RETENTION AND DISPOSAL:

Records are maintained indefinitely.

SYSTEM MANAGER(S) AND ADDRESS:

Director, Press and Publications Service, USIA, 301 4th Street SW., Washington, DC 20547.

NOTIFICATION PROCEDURE:

Director, Press and Publications Service, USIA Congressional and Public Liaison, 301 4th Street SW., Washington DC 20547.

RECORD ACCESS PROCEDURE:

Requests from individuals should be addressed to: Director, FOIA/Privacy Act Unit, Office of the General Counsel, USIA, 301 4th Street SW., Washington DC 20547.

To request another individual's file the requester must have a notarized signed statement from the individual to whom the file pertains.

CONTESTING RECORD PROCEDURES:

The Agency's rules for access and for contesting contents and appealing determinations by the individual concerned appear in 22 CFR part 505.

RECORD SOURCE CATEGORIES:

From the individuals concerned; from publications, photo agencies, and photographer associations.

SYSTEMS EXEMPTED FROM CERTAIN PROVISIONS OF THE ACT:

Not applicable.

USIA-46

SYSTEM NAME:

Service Contributors—P/PF.

SYSTEM LOCATION:

U.S. Information Agency (USIA), 301 4th Street, SW., Washington, DC 20547.

SECURITY CLASSIFICATION:

None.

CATEGORIES OF INDIVIDUALS COVERED BY THE SYSTEMS:

Free-lance writers, who are available to USIA on an intermittent, fixed-fee basis to perform services for the Agency and authors of newspaper and magazine articles.

CATEGORIES OF RECORDS IN THE SYSTEM:

Copies of purchase orders issued to contributors; addresses, phone numbers, specialties of contributors; data on number of time contributors have been used and fees paid for services.

AUTHORITY FOR MAINTENANCE OF THE SYSTEM:

IAPR—191.103 issued under authority of 5 U.S.C., Chap. 3 and Federal Property and Administrative Services Act of 1949 (Pub. L. 152, 81st Congress) as amended.

ROUTINE USES OF RECORDS MAINTAINED IN THE SYSTEM, INCLUDING CATEGORIES OF USERS AND THE PURPOSES OF SUCH USES:

Reference material used to select writers, as required, to provide coverage of newsworthy events, such as interviews with foreign visitors and students, and coverage of conferences; used to check on completion of assignment before payment for services is approved; for office reference in identifying articles, locating authors.

Information is made available on a need-to-know basis to personnel of United States Information Agency as may be required in the performance of their official duties.

Information in these files is not normally available to individuals or agencies outside the Agency, but records may be released to other Government agencies who have statutory or other lawful authority to maintain such information.

POLICIES AND PRACTICES FOR STORING, RETRIEVING, ACCESSING, RETAINING, AND DISPOSING OF RECORDS IN THE SYSTEM:

STORAGE:

Purchase order paper records in file folders.

RETRIEVABILITY:

By name and geographic location of the contribution; author files maintained alphabetically by name.

SAFEGUARDS:

Maintained in locked file cabinets.

RETENTION AND DISPOSAL:

Purchase orders retained for two years and then destroyed. Names, addresses and phone numbers retained until contributor is no longer available.

SYSTEM MANAGER AND ADDRESS:

Executive Office, Press and Publications Service, USIA, 301 4th Street, SW., Washington, DC 20547.

RECORD ACCESS PROCEDURE:

Requests from individuals should be addressed to: Director, FOIA/Privacy Act Unit, Office of the General Counsel, United States Information Agency, 301 4th Street, SW., Washington, DC 20547.

To request another individual's file the requester must have a notarized signed statement from the individual to whom the file belongs.

CONTESTING RECORD PROCEDURES:

The Agency's rules for access and for contesting contents and appealing determinations by the individual concerned appear in 22 CFR part 505.

RECORD SOURCE CATEGORIES:

Referrals by city editors of local newspapers; other free-lance contributors; data on authors obtained from the newspaper or magazine article in which the original article appeared, from the author directly or from standard references such as "Who's Who" and "Editor and Publisher."

SYSTEMS EXEMPTED FROM CERTAIN PROVISIONS OF THE ACT:

Not applicable.

USIA-47

SYSTEM NAME:

Problems of Communism Branch—P/PMP.

SYSTEM LOCATION:

Problems of Communism Branch, Press and Publications Service, United States Information Agency (USIA), 301 4th Street, SW., Washington, DC 20547.

SECURITY CLASSIFICATION:

None.

CATEGORIES OF INDIVIDUALS COVERED BY THE SYSTEM:

Scholars, analysts, journalists, photographers, and artists who have contributed to or submitted articles, illustrative materials, or photos for consideration by Problems of Communism magazine.

CATEGORIES OF RECORDS IN THE SYSTEM:

Copies of purchase orders issued to contributors; biographic data on contributors, including addresses, phone numbers, specialties, data on number of times contributors have been used; correspondence concerning contributions published or rejected.

AUTHORITY FOR MAINTENANCE OF THE SYSTEM:

Federal Records Act, 44 U.S.C. 3101.

ROUTINE USES OF RECORDS MAINTAINED IN THE SYSTEM, INCLUDING CATEGORIES OF USERS AND THE PURPOSES OF SUCH USES:

Material used for office reference in selecting authors, artists, or photographers, as required.

Information is regularly available to staff members of P/PMP.

Information in these records is not normally available to individuals or agencies outside the USIA but records may be released to other government agencies who have statutory or other lawful authority to maintain such information.

POLICIES AND PRACTICES FOR STORING, RETRIEVING, ACCESSING, RETAINING, AND DISPOSING OF RECORDS IN THE SYSTEM:

STORAGE:

Purchase order paper records in file folders; biographic data and correspondence with authors in file folders; record of authors used on 3×5 cards; names, addresses, and telephone numbers of author and vendor contacts maintained on Rolodex files; photo vendors in file folders.

RETRIEVABILITY:

Author and vendor files maintained alphabetically by name.

SAFEGUARDS:

Basic individual files maintained in locked file cabinets.

RETENTION AND DISPOSAL:

Purchase orders retained for two (2) years and then destroyed. Biographic data retained until contributor is no longer available, has died, or has moved; author index retained indefinitely.

SYSTEM MANAGER AND ADDRESS:

Problems of Communism Branch, Press and Publications Service, USIA, 301 4th Street, SW., Washington, DC 20547.

NOTIFICATION PROCEDURE:

Problems of Communism Branch, Press and Publications Service, USIA, 301 4th Street, SW., Washington, DC 20547.

RECORD ACCESS PROCEDURE:

Requests from individuals should be addressed to: Director, FOIA/Privacy Act Unit, Office of the General Counsel, USIA, 301 4th Street, SW., Washington, DC 20547.

To request another individual's file the requester must have a notarized signed statement from the individual to whom the file pertains.

CONTESTING RECORD PROCEDURES:

The Agency's rules for access and for contesting contents and appealing determinations by the individual concerned appear in 22 CFR part 505.

RECORD SOURCE CATEGORIES:

Biographic and other data provided by individuals concerned.

SYSTEMS EXEMPTED FROM CERTAIN PROVISIONS OF THE ACT:

Not applicable.

USIA-48

SYSTEM NAME:

Non-Official Personnel Files—PL/USIA.

SYSTEM LOCATION:

Office of Public Liaison (PL), United States Information Agency (USIA), 301 4th Street, SW., Washington, DC 20547.

SECURITY CLASSIFICATION:

None.

CATEGORIES OF INDIVIDUALS COVERED BY THE SYSTEM:

Current employees and employees of other agencies detailed to PL/USIA.

CATEGORIES OF RECORDS IN THE SYSTEM:

Job descriptions; personnel action forms; employee locator cards; letters of commendation and other correspondence; material related to employment, experience, training, special qualifications and skills; leave records.

AUTHORITY FOR MAINTENANCE OF THE SYSTEM:

Federal Records Act of 1950, 44 U.S.C. 3101.

ROUTINE USES OF RECORDS MAINTAINED IN THE SYSTEM, INCLUDING CATEGORIES OF USERS AND THE PURPOSES OF SUCH USES:

To prepare requests for personnel actions; to provide convenient access to information about employees in view of the office's physical separation from the Office of Personnel Services which maintains Official Personnel Files.

Also see Prefatory Statement of General Routine Uses.

Information is made available on a need-to-know basis to personnel of the USIA as may be required in the performance of their official duties.

Information in these records is not normally available to individuals or agencies outside the USIA but records may be released to other government agencies who have statutory or other lawful authority to maintain such information.

POLICIES AND PRACTICES FOR STORING, RETRIEVING, ACCESSING, RETAINING, AND DISPOSING OF RECORDS IN THE SYSTEM:

STORAGE:

Paper records in file folders.

RETRIEVABILITY:

Indexed alphabetically by individual name.

SAFEGUARDS:

Maintained in locked file cabinets.

RETENTION AND DISPOSAL:

Records are kept in active status as long as files are of active interest. Thereafter, the records become inactive but are still maintained.

SYSTEM MANAGE AND ADDRESS:

Director, Office of Public Liaison (PL), USIA, 301 4th Street, SW, Washington, DC 20547.

NOTIFICATION PROCEDURE:

Director, Office of Public Liaison (PL), USIA, 301 4th Street, SE, Washington, DC 20547.

RECORD ACCESS PROCEDURE:

Requests from individuals should be addressed to: Director, FOIA/Privacy Act Unit, Office of the General Counsel, USIA, 301 4th Street, SE, Washington, DC 20547.

To request another individual's file the requester must have a notarized signed statement from the individual to whom the file pertains.

CONTESTING RECORD PROCEDURES:

The Agency's rules for access and for contesting contents and appealing determinations by the individual concerned appear in 22 CFR part 505.

RECORD SOURCE CATEGORIES:

From the individual concerned; copies of actions originated by USIA's Office of Personnel Services; USIA's Payroll Office; supervisors of employees on whom records are maintained.

SYSTEMS EXEMPTED FROM CERTAIN PROVISIONS OF THE ACT:

Not applicable.

USIA-49

SYSTEM NAME:

Senior Officer and Prominent Employee Information—PL/USIA.

SYSTEM LOCATION:

Office of Public Liaison (PL), United States Information Agency (USIA), 301 4th Street, SW, Washington, DC 20547.

SECURITY CLASSIFICATION:

None.

CATEGORIES OF INDIVIDUALS COVERED BY THE SYSTEM:

Leaders of the USIA and other prominent employees.

CATEGORIES OF RECORDS IN THE SYSTEM:

Photographs, biographic data sheets and press releases.

AUTHORITY FOR MAINTENANCE OF THE SYSTEM:

Federal Records Act, 44 U.S.C. 3101.

ROUTINE USES OF RECORDS MAINTAINED IN THE SYSTEM, INCLUDING CATEGORIES OF USERS AND THE PURPOSES OF SUCH USES:

For responding to press inquiries and in the preparation of Agency press releases concerning leaders of the USIA and prominent employees.

Also see Prefatory Statement of General Routine Uses.

Information is made available on a need-to-know basis to personnel of the USIA as may be required in the performance of their official duties.

Information in these records is not normally available to individuals or agencies outside the USIA but records may be released to other government agencies who have statutory or other lawful authority to maintain such information.

POLICIES AND PRACTICES FOR STORING, RETRIEVING, ACCESSING, RETAINING, AND DISPOSING OF RECORDS IN THE SYSTEM:

STORAGE:

Paper records and photographs in file folders.

RETRIEVABILITY:

By name of the individual employee.

SAFEGUARDS:

Maintained in locked file cabinets.

RETENTION AND DISPOSAL:

Records are disposed of in accordance with Federal Records Management procedures.

SYSTEM MANAGER AND ADDRESS:

Director, Office of Public Liaison (PL), USIA, 301 4th Street, SW, Washington, DC 20547.

NOTIFICATION PROCEDURE:

Director, Office of Public Liaison (PL), USIA, 301 4th Street, SW, Washington, DC 20547.

RECORD ACCESS PROCEDURE:

Requests from individuals should be addressed to: Director, FOIA/Privacy Act Unit, Office of the General Counsel, USIA, 301 4th Street, SW, Washington, DC 20547.

To request another individual's file the requester must have a notarized signed statement from the individual to whom the file pertains.

CONTESTING RECORD PROCEDURES:

The Agency's rules for access and for contesting contents and appealing determinations by the individual concerned appear in 22 CFR part 505.

RECORD SOURCE CATEGORIES:

The Department of State Biographic Register; "Who's Who"; from the individual concerned; and from press releases concerning the individual.

SYSTEMS EXEMPTED FROM CERTAIN PROVISIONS OF THE ACT:

Not applicable.

USIA-50

SYSTEM NAME:

Office of research—R.

SYSTEM LOCATION:

Office of Research, United States Information Agency (USIA), 301 4th Street, SW, Washington, DC 20547.

SECURITY CLASSIFICATION:

None. However a portion of the records are classified at the level of Confidential and Secret.

CATEGORIES OF INDIVIDUALS COVERED BY THE SYSTEM:

Job applicants, prospective contractors or vendors, and any other individuals from who services (compensated or not) may be formally solicited by the Office of Research.

CATEGORIES OF RECORDS IN THE SYSTEM:

Resumes, employment inquiries, and related correspondence, and records on the security clearance status of prospective vendors.

AUTHORITY FOR MAINTENANCE OF THE SYSTEM:

Federal Record Act of 1950, as amended, 44 U.S.C. 3101.

ROUTINE USES OF RECORDS MAINTAINED IN THE SYSTEM, INCLUDING CATEGORIES OF USERS AND THE PURPOSES OF SUCH USES:

To review qualifications of candidates for employment, to comply with security regulations in procurement actions or when soliciting services from outsiders.

Also see Prefatory Statement of General Routine Uses.

Information is made available on a need-to-know basis to personnel of the USIA, but records may be released to other government agencies who have statutory or other lawful authority to maintain such information.

POLICIES AND PRACTICES FOR STORING, RETRIEVING, ACCESSING, RETAINING, AND DISPOSING OF RECORDS IN THE SYSTEM:

STORAGE:

Paper records in file folders.

RETRIEVABILITY:

Indexed alphabetically by individual name.

SAFEGUARDS:

Maintained in bar-locked file cabinets or combination lock safes.

RETENTION AND DISPOSAL:

Records on security clearance status of contractors and vendors are maintained indefinitely; employed applications and inquiries are retained for two years or as long as there is an interest or prospect of employment of the individual with disposal in accordance with internal disposal requirements.

SYSTEM MANAGER AND ADDRESS:

Director, Office of Research, USIA, 301 4th Street, SW., Washington, DC 20547.

NOTIFICATION PROCEDURE:

Director, Office of Research, USIA, 301 4th Street, SW., Washington, DC 20547.

RECORD ACCESS PROCEDURE:

Request from individuals should be addressed to: Director, FOIA/Privacy Act Unit, Office of the General Counsel, USIA, 301 4th Street, SW., Washington, DC 20547.

To request another individual's file the requester must have a notarized signed statement from the individual to whom the file pertains.

CONTESTING RECORD PROCEDURES:

The Agency's rules for access and for contesting contents and appealing determinations by the individual concerned appear in 22 CFR Part 505.

RECORD SOURCE CATEGORIES:

From the individuals concerned and from USIA's Office of Security.

SYSTEMS EXEMPTED FROM CERTAIN PROVISIONS OF THE ACT:

Not applicable.

USIA—51

SYSTEM NAME:

Contract Talent and Employee Recruitment Files—TV.

SYSTEM LOCATION:

Television and Film Service, United States Information Agency (USIA), 601 D Street, NW. Washington, DC 20001

Television and Film Service, USIA, 110 East 59th Street, Second Floor, New York, New York 10022–6780.

SECURITY CLASSIFICATION:

Individual files up to Confidential.

CATEGORIES OF INDIVIDUALS COVERED BY THE SYSTEM:

Job applicants; professional talent specialists in language, camera, acting, etc.; contractual motion picture and television producers.

CATEGORIES OF RECORDS IN THE SYSTEM:

Records on individuals who have applied for employment as free-lance talent; correspondence between contractual videotape, motion picture and television producers; film review sheets; producer questionnaire forms; duplicate copies of security clearance information on talent vendors and contractural producers; card files on applicants for employment with USIA's Television and Film Service.

AUTHORITY FOR MAINTENANCE OF THE SYSTEM:

Federal Records Act, 44 U.S.C. 3101.

ROUTINE USES OF RECORDS MAINTAINED IN THE SYSTEM, INCLUDING CATEGORIES OF USERS AND THE PURPOSES OF SUCH USES:

To identify sources for contract productions; to identify individuals who have applied to USIA for employment as free-lance talent vendors; to fill vacant positions in production and/or technical positions as they become vacant; to determine security clearance status of contractual individuals or companies.

Also see Prefatory Statement of General Routine Uses.

Information is made available on a need-to-know basis to personnel of the USIA as may be required in the performance of their official duties.

Information in these records is not normally available to individuals or agencies outside the USIA but records may be released to other government agencies who have statutory or other lawful authority to maintain such information.

POLICIES AND PRACTICES FOR STORING, RETRIEVING, ACCESSING, RETAINING, AND DISPOSING OF RECORDS IN THE SYSTEM:

STORAGE:

Card records and paper records in file folders.

RETRIEVABILITY:

By name of the individual concerned.

SAFEGUARDS:

1. *Authorized users:* Access to contract talent and employee recruitment files is available only to authorized personnel within the Agency.
2. *Physical Safeguards:* All folders are maintained in standard locking cabinets which are locked during non-duty hours.
3. *Procedural safeguards:* All users of personal information in connection with performance of their jobs protect information from public view and from unauthorized personnel entering an unsupervised office.
4. *Implementation guidelines:* USIA Manual of Operations and Administration, Freedom of Information (FOIA) and Privacy Act (PA).

RETENTION AND DISPOSAL:

Records on talent vendors and contractual producers retained indefinitely; records on job applicants retained for ten years and disposed of in accordance with internal schedules for retention and disposal of files.

SYSTEM MANAGERS AND ADDRESS:

Chief, Televsion and Film Service, USIA, 601 D Street, NW., Washington, DC 20001, Executive Officer, Television and Film Service, USIA, 601 D Street, NW, Washington, DC 20001.

NOTIFICATION PROCEDURE:

Chief, Television and Film Service, USIA, 601 D Street, NW, Washington, DC 20001. Executive Officer, Television and Film Service, USIA, 601 D Street, NW, Washington, DC 20001.

RECORD ACCESS PROCEDURE:

Requests from individual should be addressed to: Director, FOIA/Privacy Act Unit, Office of the General Counsel, USIA, 301 4th Street, SW., Washington, DC 20547.

To request another individual's file the requester must have a notarized signed statement from the individual to whom the file pertains.

CONTESTING RECORD PROCEDURES:

The Agency's rules for access and for contesting contents and appealing determinations by the individual concerned appear in 22 CFR Part 505.

RECORD SOURCE CATEGORIES:

Provided by vendors, contractors and job applicants concerned; by employees of USIA's Television and Film Service.

SYSTEM EXEMPTED FROM CERTAIN PROVISIONS OF THE ACT:

Not applicable.

USIA—52

SYSTEM NAME:

Source File—TV.

SYSTEM LOCATION:

Television and Film Service, United States Information Agency (USIA), 601 D Street, NW., Washington, DC 20001.

SECURITY CLASSIFICATION:

Individual documents up to Confidential.

CATEGORIES OF INDIVIDUALS COVERED BY THE SYSTEM:

Individuals in the audio-visual field who are in contact with the Office of Policy and Planning Staff on attestation, film festivals and other activities.

CATEGORIES OF RECORDS IN THE SYSTEM:

Biographical data, press releases, routine correspondence, and similar material.

AUTHORITY FOR MAINTENANCE OF THE SYSTEM:

Federal Records Act, 44 U.S.C. 3101.

ROUTINE USES OF RECORDS MAINTAINED IN THE SYSTEM, INCLUDING CATEGORIES OF USERS AND THE PURPOSES OF SUCH USES:

To provide a source of information files for the Media Resources Branch on subjects such as media products in the United States, attestation and film festivals.

Also see Prefatory Statement of General Routine Uses.

Information is made available on a need-to-know basis to personnel of the USIA as may be required in the performance of their official duties.

Information in these records is not normally available to individuals or agencies outside the USIA but records may be released to other government agencies who have statutory or other lawful authority to maintain such information.

POLICIES AND PRACTICES FOR STORING, RETRIEVING, ACCESSING, RETAINING, AND DISPOSING OF RECORDS IN THE SYSTEM:

STORAGE:

Paper records in file folders.

RETRIEVABILITY:

By name of the individual concerned.

SAFEGUARDS:

1. *Authorized users:* Access to contract talent and employee recruitment files is available only to authorized personnel within the Agency.
2. *Physical Safegurds:* All folders are maintained in standard locking cabinets which are locked during non-duty hours.
3. *Procedural safeguards:* All users of personal information in connection with performance of their jobs protect information from public view and from unauthorized personnel entering an unsupervised office.
4. *Implementation guidelines:* USIA Manual of Operations and Administration, Freedom of Information (FOIA) and Privacy Act (PA).

RETENTION AND DISPOSAL:

Files are reviewed approximately every 5 years and retained, retired or destroyed as appropriate.

SYSTEM MANAGER AND ADDRESS:

Chief, Office of Planning and Programming Coordination, Television and Film Service, USIA, 601 D Street, NW., Washington, DC 20001.

NOTIFICATION PROCEDURE:

Chief, Television and Film Service, USIA, 601 D Street, NW, Washington, D.C. 20001. Executive Officer, Television and Film Service, USIA, 601 D Street, NW, Washington DC 20001.

RECORD ACCESS PROCEDURE:

Requests from individuals should be addressed to: Director, FOIA/Privacy Act Unit, Office of the General Counsel, USIA, 301 4th Street, SW, Washington, DC 20547.

To request another individual's file the requester must have a notarized signed statement from the individual to whom the file pertains.

CONTESTING RECORD PROCEDURES:

The Agency's rules for access and for contesting contents and appealing determinations by the individual concerned appear in 22 CFR part 505.

RECORD SOURCE CATEGORIES:

Information is provided by the individual concerned or is from published sources.

SYSTEMS EXEMPTED FROM CERTAIN PROVISIONS OF THE ACT:

Not applicable.

USIA-53

SYSTEM NAME:

Contract Talent Vendor Files—VOA/A.

SYSTEM LOCATION:

Voice of America, United States Information Agency (USIA), Cohen Building, 330 Independence Avenue, SW, Washington, DC 20547. Voice of America, USIA, Switzer Building, 330 C Street, SW, Washington, DC 20547.

SECURITY CLASSIFICATION:

Individual documents up to Confidential.

CATEGORIES OF INDIVIDUALS COVERED BY THE SYSTEM:

All contract talent vendores who perform free-lance services for the Voice of America (VOA).

CATEGORIES OF RECORDS IN THE SYSTEM:

Records and information pertaining to the testing and qualifications of vendors; security clearance applications and approvals; copies of contracts, and detailed record of services performed by vendors and payments made by VOA for these services.

AUTHORITY FOR MAINTENANCE OF THE SYSTEM:

Pub. L. 80-402; United States Information and Educational Exchange Act of 1948, as amended.

ROUTINE USES OF RECORDS MAINTAINED IN THE SYSTEM, INCLUDING CATEGORIES OF USERS AND THE PURPOSES OF SUCH USES:

Provide necessary reference information for use by VOA administrative offices in meeting their daily responsibilities of advising on and coordinating programming and fiscal activities relating to contracting in free-lance talent vendors.

Also see Prefatory Statement of General Routine Uses.

Information is made available on a need-to-know basis to personnel of the USIA as may be required in the performance of their official duties.

Information in these records is not normally available to individuals or agencies outside the USIA but records may be released to other government agencies who have statutory or other lawful authority to maintain such information.

POLICIES AND PRACTICES FOR STORING, RETRIEVING, ACCESSING, RETAINING, AND DISPOSING OF RECORDS IN THE SYSTEM:

STORAGE:

Information is retained in document form in file folders and in automated data base system.

RETRIEVABILITY:

Document and computer files are indexed by vendor's name.

SAFEGUARDS:

Document files are locked in security-approved file cabinets. Computer records require appropriate password to gain access. General access to files is permitted only to administrative staffs and other top management officials having a need to know such information in the normal performance of their duties.

RETENTION AND DISPOSAL:

Files are retained for three to four years after last date of services rendered by vendor, after which time files are then destroyed in accordance with established USIA records disposition procedures.

SYSTEM MANAGER AND ADDRESS:

Director of Administration, Voice of America, USIA, Cohen Building, 330 Independence Avenue, SW, Washington, DC 20547.

NOTIFICATION PROCEDURE:

Director of Administration, Voice of America, USIA, 301 4th Street, SW, Washington, DC 20547.

RECORD ACCESS PROCEDURE:

Requests from individuals should be addressed to: Director, FOIA/Privacy Act Unit, Office of the General Counsel, USIA, 301 4th Street, SW, Washington, DC 20547.

To request another individual's file the requester must have a notarized signed statement from the individual to whom the file pertains.

CONTESTING RECORD PROCEDURES:

The Agency's rules for access and for contesting contents and appealing determinations by the individual concerned appear in 22 CFR part 505.

RECORD SOURCE CATEGORIES:

Information is received from vendor (application forms); from USIA Security Office (approval of security clearance request); from documents generated through the normal process of using a vendor and making payments for services rendered (purchase orders and payment records).

SYSTEMS EXEMPTED FROM CERTAIN PROVISIONS OF THE ACT:

Not applicable.

USIA-54

SYSTEM NAME:

VOA Director's Executive Secretariat Files—VOA/ES

SYSTEM LOCATION:

Voice of America Director's Office Executive Secretariat, 330 Independence Avenue, SW, Washington, DC 20547.

SECURITY CLASSIFICATION:

None.

CATEGORIES OF INDIVIDUALS COVERED BY THE SYSTEM:

Members of the White House Staff, Members of Congress and their staff, heads of other executive agencies of the Federal government and members of the general public.

CATEGORIES OF RECORDS IN THE SYSTEM:

Correspondence addressed to the Director of VOA, as well as the Director of USIA, and copies of responses to requests for reports, information and/or assistance of various kinds prepared by the VOA Director or designated representatives.

AUTHORITY FOR MAINTENANCE OF THE SYSTEM:

Federal Records Act of 1950, as amended, 44 U.S.C. 3101-3107; Records Disposal Act of 1943, as amended, 44 U.S.C. 3301-3314.

ROUTINE USES OF RECORDS MAINTAINED IN THE SYSTEM, INCLUDING CATEGORIES OF USERS AND THE PURPOSES OF SUCH USES:

Reference file to provide oversight of the flow of requests to the VOA Director for reports on programming effectiveness of VOA broadcasts, information and/or assistance of various kinds, and to monitor the accomplishment of responses to such requests.

Also see Prefatory Statement of General Routine Uses.

Information is made available on a need-to-know basis to personnel of the VOA and the USIA as may be required in the performance of their official duties.

The information may also be released to other government agencies who have statutory or other lawful authority to maintain such information.

POLICIES AND PRACTICES FOR STORING, RETRIEVING, ACCESSING, RETAINING, AND DISPOSING OF RECORDS IN THE SYSTEM:

STORAGE:

Records are stored in a computer maintained by and located within the VOA Secretariat and maintained as paper records in file folders in the Secretariat.

RETRIEVABILITY:

Records are cross-indexed by individual name, organization, subject file and by computer reference number.

SAFEGUARDS:

Computer records are accessible only to authorized employees of the VOA Director's staff. Paper records are kept in locked file cabinets which are contained in a secure area.

RETENTION AND DISPOSAL:

Records are maintained indefinitely.

SYSTEM MANAGER AND ADDRESS:

Supervisory Staff Analyst, Executive Secretariat, Voice of America, USIA, 330 Independence Avenue, SW., Washington, DC 20547.

NOTIFICATION PROCEDURE:

Executive Secretariat, Voice of America, USIA, 330 Independence Avenue, SW., Washington, DC 20547.

RECORD ACCESS PROCEDURE:

Requests from individuals should be addressed to: Director, FOIA/Privacy Act Unit, Office of the General Counsel, USIA, 301 4th Street, SW., Washington, DC 20547.

To request another individual's file the requester must have a notarized signed statement from the individual to whom the file pertains.

CONTESTING RECORD PROCEDURES:

The Agency's rules for access and for contesting contents and appealing determinations by the individual concerned appear in 22 CFR part 505.

RECORD SOURCE CATEGORIES:

Unsolicited correspondence from U.S. Government officials and members of the general public addressed to the Director of the VOA or the Director of the USIA concerning VOA.

SYSTEMS EXEMPTED FROM CERTAIN PROVISIONS OF THE ACT:

Certain records contained within this system of records may be exempted from 5 U.S.C. 552a(c)(3), (d), (e)(1), (e)(4), (g), (h) and (f). See 22 CFR 505.15.

USIA—55

SYSTEM NAME:

Employee Personnel Files—VOA/P.

SYSTEM LOCATION:

Voice of America, United States Information Agency (USIA), Cohen Building, 330 Independence Avenue, SW., Washington, DC 20547.

SECURITY CLASSIFICATION:

Individual documents up to Confidential.

CATEGORIES OF INDIVIDUALS COVERED BY THE SYSTEM:

Voice of America (VOA) domestic employees and overseas American employees.

CATEGORIES OF RECORDS IN THE SYSTEM:

Records and information pertaining to the testing, recruitment and appointment of employees (application forms, fiscal documents covering related expenses); records concerning post-appointment changes in employee skills, qualifications, and experience; copies of SF-50 "Notice of Personnel Action" and payroll change slips.

AUTHORITY FOR MAINTENANCE OF THE SYSTEM:

Pub. L. 80–402, United States Information and Educational Exchange Act of 1948, as amended.

ROUTINE USES OF RECORDS MAINTAINED IN THE SYSTEM, INCLUDING CATEGORIES OF USERS AND THE PURPOSES OF SUCH USES:

Files maintained for convenience due to physical separation from Personnel Office; provide necessary background/reference information for use by VOA Administrative Offices in meeting their daily responsibilities of advising on and coordinating programming, personnel and fiscal activities relating to recruitment, hiring and employment of staff employees.

Also see Prefatory Statement of General Routine Uses.

Information is made available on a need-to-know basis to personnel of the USIA as may be required in the performance of their official duties.

Information in these records is not normally available to individuals or agencies outside the USIA but records may be released to other government agencies who have statutory or other lawful authority to maintain such information.

POLICIES AND PRACTICES FOR STORING, RETRIEVING, ACCESSING, RETAINING, AND DISPOSING OF RECORDS IN THE SYSTEM:

STORAGE:

All information is retained in document form in file folders and is retained electronically.

RETRIEVABILITY:

Files are indexed alphabetically by employee name.

SAFEGUARDS:

All files are locked in security-approved file cabinets, automated systems require appropriate security procedures for access. Access to files is permitted only to administrative staffs and other top management officials having a need to know such information in the normal performance of their duties.

RETENTION AND DISPOSAL:

Files may be retained for up to two years then destroyed in accordance with established USIA records disposal procedures. Copies of documents for which originals exist in Office of Personnel Folders and which are removed from official personnel folders when an employee resigns, are also removed from administrative files and destroyed.

SYSTEM MANAGER AND ADDRESS:

Director of Personnel, Voice of America, USIA, Cohen Building, 330 Independence Avenue, SW., Washington, DC 20547.

NOTIFICATION PROCEDURE:

Director of Personnel, Voice of America, USIA, Cohen Building, 330 Independence Avenue, SW., Washington, DC 20547.

RECORD ACCESS PROCEDURE:

Requests from individuals should be addressed to: Director, FOIA/Privacy Act Unit, Office of the General Counsel, USIA, 301 4th Street, SW., Washington, DC 20547.

To request another individual's file the requester must have a notarized signed statement from the individual to whom the file pertains.

CONTESTING RECORD PROCEDURES:

The Agency's rules for access and for contesting contents and appealing determinations by the individual concerned appear in 22 CFR part 505.

RECORD SOURCE CATEGORIES:

Information is received from employees (application forms); from employees' supervisors (employees' experience, performance, and recommendations for promotions, etc.); from organizational personnel and fiscal elements (SF-50 personnel actions, payroll change slips, etc.).

SYSTEMS EXEMPTED FROM CERTAIN PROVISIONS OF THE ACT:

Not applicable.

USIA—56

SYSTEM NAME:

Americans Residing in Foreign Countries—USIA.

SYSTEM LOCATION:

The United States Information Agency (USIA) maintains establishments overseas in 141 foreign countries which are designated as mission posts, branch posts, regional service centers, VOA relay stations and media extensions. A current listing of names and addresses of overseas establishments is not considered practical for Privacy Act purposes due to the fact that such a list would require frequent amendment.

Changing of office locations, opening of new offices, closing of established offices and realignment of geographic areas have become practical realities in conducting the Agency's mission overseas. Individuals who feel that records pertaining to themselves are maintained at any of our overseas locations may contact the Director, USIA, 301 4th Street, SW., Washington, DC 20547. The Agency maintains a current listing of overseas posts, which is available to the public as indicated in 22 CFR Chapter V, § 504.2.

SECURITY CLASSIFICATION:

None.

CATEGORIES OF INDIVIDUALS COVERED BY THE SYSTEM:

American citizens and aliens admitted for permanent U.S. residence who are residing overseas, i.e., journalists, businessmen, scholars, artists, representatives of other U.S. government agencies, missionaries.

CATEGORIES OF RECORDS IN THE SYSTEM:

Names and addresses.

AUTHORITY FOR MAINTENANCE OF THE SYSTEM:

Pub. L. 80–402, Information and Educational Exchange Act of 1948, as amended; Federal Records Act, 44 U.S.C. 3101.

ROUTINE USES OF RECORDS MAINTAINED IN THE SYSTEM, INCLUDING CATEGORIES OF USERS AND THE PURPOSES OF SUCH USES:

Distribution of printed matter; invitation lists of official social functions and programs; selection of candidates for temporary employment, as needed; location of specialists to arrange, conduct, appear in or appraise Agency programs organized overseas; press briefings for American journalists residing in foreign countries; appraisal of American specialists whose services are utilized in Agency programming overseas.

Also see Prefatory Statement of General Routine Uses.

Information is made available on a need-to-know basis to personnel of the USIA as may be required in the performance of their official duties.

Information in these records is not normally available to individuals or agencies outside the USIA but records may be released to other government agencies who have statutory or other lawful authority to maintain such information.

POLICIES AND PRACTICES FOR STORING, RETRIEVING, ACCESSING, RETAINING, AND DISPOSING OF RECORDS IN THE SYSTEM:

STORAGE:

Addressograph plates or paper records in file folders.

RETRIEVABILITY:

By name of the individual.

SAFEGUARDS:

Records are kept in locked file cabinets or in locked rooms when not in use.

RETENTION AND DISPOSAL:

Records are updated regularly and plates or paper files no longer useful or current are destroyed.

SYSTEM MANAGER AND ADDRESS:

See "System location" above.

NOTIFICATION PROCEDURE:

Director, USIA, 301 4th Street, SW., Washington, DC 20547.

RECORD ACCESS PROCEDURE:

Requests from individuals should be addressed to: Director, FOIA/Privacy Act Unit, Office of the General Counsel, USIA, 301 4th Street, SW., Washington, DC 20547.

To request another individual's file the requester must have a notarized signed statement from the individual to whom the file pertains.

CONTESTING RECORD PROCEDURES:

The Agency's rules for access and for contesting contents and appealing determinations by the individual concerned appear in 22 CFR part 505.

RECORD SOURCE CATEGORIES:

Information obtained from the individual concerned.

SYSTEMS EXEMPTED FROM CERTAIN PROVISIONS OF THE ACT:

Not applicable.

USIA–57

SYSTEM NAME:

Employee Parking—USIA.

SYSTEM LOCATION:

Office of Administration, Bureau of Management, United States Information Agency (USIA), 301 4th Street, SW., Washington, DC 20547.

SECURITY CLASSIFICATION:

None.

CATEGORIES OF INDIVIDUALS COVERED BY THE SYSTEM:

Agency employees assigned USIA controlled parking spaces; employees awaiting assignment of vacated parking spaces.

CATEGORIES OF RECORDS IN THE SYSTEM:

Names, office locations and telephone numbers of employees assigned parking space; participants in carpools; records on employees with physical handicaps and doctors or others to contact in case of emergency; waiting list of employees desiring assignment of official parking space.

AUTHORITY FOR MAINTENANCE OF THE SYSTEM:

Code of Federal Regulations (41 CFR part 101) prescribing regulations regarding the use of federally controlled parking spaces.

ROUTINE USES OF RECORDS MAINTAINED IN THE SYSTEM, INCLUDING CATEGORIES OF USERS AND THE PURPOSE OF SUCH USES:

Assignment of parking space to Agency executives; to assure fairness in the assignment of parking space to employees and to give priority to the handicapped and to carpools. Also see Prefatory Statement of General Routine Uses.

Information is made available on a need-to-know basis to personnel of the United States Information Agency as may be required in the performance of their official duties.

The information may also be released to other government agencies who have statutory or other lawful authority to maintain such information.

POLICIES AND PRACTICES FOR STORING, RETRIEVING, ACCESSING, RETAINING, AND DISPOSING OF RECORDS IN THE SYSTEM:

STORAGE:

Paper records maintained in file folders and word processing lists in mainframe computer system.

RETRIEVABILITY:

By name of the employee.

SAFEGUARDS:

Maintained in bar-lock cabinets, and computer access is password controlled.

RETENTION AND DISPOSAL:

Records destroyed three months after employee relinquishes assigned parking space or is separated from the Agency. GRS–11.4(a).

SYSTEM MANAGER AND ADDRESS:

Director, Office of Administration, United States Information Agency, Room 618, 301 4th Street, SW., Washington, DC 20547.

NOTIFICATION PROCEDURE:

Director, Office of Administration, United States Information Agency, Room 618, 301 4th Street, SW., Washington, DC 20547.

RECORD ACCESS PROCEDURE:

Requests from individuals should be addressed to: Director, FOIA/Privacy Act Unit, Office of the General Counsel, United States Information Agency, 301 4th Street, SW., Washington, DC 20547.

To request another individual's file the requester must have a notarized signed statement from the individual to whom the file belongs.

CONTESTING RECORD PROCEDURE:

The Agency's rules for access and for contesting contents and appealing initial determination by the individual concerned appear in 22 CFR part 505.

RECORD SOURCE CATEGORIES:

Information obtained from individuals concerned, and responses generated by various Agency personnel.

SYSTEMS EXEMPTED FROM CERTAIN PROVISIONS OF THE ACT:

Not applicable.

USIA-58

SYSTEM NAME:

Overseas Personnel Files and Records—USIA.

SYSTEM LOCATION:

The United States Information Agency (USIA), maintains establishments overseas in over 140 foreign countries which are designated as mission posts, regional service centers, VOA relay stations, and media extensions. A current listing of names and addresses of overseas establishments is not considered practical for Privacy Act purposes because of frequent amendment. Changing of office locations, opening of new offices, closing of established offices and realignment of geographic areas have become practical realities in conducting the Agency's mission overseas. Individuals who feel that records pertaining to themselves may be maintained at one of our overseas locations may contact the Freedom of Information Unit (GC/FOI) of the United States Information Agency (USIA), 301 4th Street, SW., Washington, DC 20547.

SECURITY CLASSIFICATION:

Some of the records are classified at the level of Confidential and Secret.

CATEGORIES OF INDIVIDUALS COVERED BY THE SYSTEM:

Foreign Service employees of the U.S. Information Agency who are serving or have served at any of the Agency's overseas establishments.

CATEGORIES OF RECORDS IN THE SYSTEM:

Personnel evaluation reports, travel orders, personnel action forms, payroll change forms, residency and dependency reports, correspondence related to transfer of duty station or training assignments.

AUTHORITY FOR MAINTENANCE OF THE SYSTEM:

The Foreign Service Act of 1980.

ROUTINE USES OF RECORDS MAINTAINED IN THE SYSTEM, INCLUDING CATEGORIES OF USERS AND THE PURPOSES OF SUCH USES:

Maintained for convenience due to separation from main office; for use by senior USIA officers at overseas establishments in evaluating the performance of subordinate officers; for planning future staffing requirements, dates of reassignment of officers, entitlement to foreign service allowances, home address and next of kin in the United States in case of emergency, settlement of personal business after departure of employee from the overseas establishment.

Also see Prefatory Statement of General Routine Uses.

Information in these files is available only to personnel of USIA on a need-to-know basis as may be required in the performance of their official duties. Records may be released to other government agencies with statutory authority to access and maintain such information.

The principal user of this information outside the USIA is the Department of State.

POLICIES AND PRACTICES FOR STORING, RETRIEVING, ACCESSING, RETAINING, AND DISPOSING OF RECORDS IN THE SYSTEM:

STORAGE:

Paper records in file folders.

RETRIEVABILITY:

Alphabetically by name of individual.

SAFEGUARDS:

Maintained in locked file cabinets.

RETENTION AND DISPOSAL:

Some information is kept as long as an employee remains with USIA, while other information is destroyed three years after employee's departure from post. (Reference USIA's Manual of Operations and Administration, Part III, Exhibit 630–A–3, page 3).

SYSTEM MANAGER AND ADDRESS:

Chief, Foreign Service Personnel Division, Office of Personnel, USIA, 301 4th Street, SW., Washington, DC 20547.

NOTIFICATION PROCEDURE:

Chief, Foreign Service Personnel Division, Office of Personnel, USIA, 301 4th Street, SW., Washington, DC 20547.

RECORD ACCESS PROCEDURES:

Requests from individuals should be addressed to: Director, FOIA/Privacy Act Unit, Office of the General Counsel, USIA, 301 4th Street, SW., Washington, DC 20547.

CONTESTING RECORD PROCEDURE:

The Agency's rules for access and for contesting contents and appealing determinations by the individual concerned appear in 22 CFR part 505.

RECORD SOURCE CATEGORIES:

Documents contained in these records include both materials generated by the Agency's Foreign Service Personnel Division and by other elements of the U.S. Information Agency or, in some instances, by the Department of State.

SYSTEMS EXEMPTED FROM CERTAIN PROVISIONS OF THE ACT:

Not applicable.

Appendix I—Prefatory Statement of General Routine Uses

The following routine uses apply to, and are incorporated by reference into, each system of records set forth above.

1. In the event that a system of records maintained by the Agency to carry out its functions indicates a violation or potential violation of law, whether civil, criminal or regulatory in nature, and whether arising by general statute or particular program pursuant thereto, the relevant records in the system of records may be referred, as a routine use, to the appropriate agency, whether federal, state, local or foreign, charged with the responsibility of investigating or prosecuting such violation or charged with enforcing or implementing the statute, or rule, regulation or order issued pursuant thereto.

2. A record from this system of records may be disclosed, as a routine use, to a federal, state, or local agency maintaining civil, criminal or other relevant enforcement information or other pertinent information, such as current licenses, if necessary to obtain information relevant to an Agency decision concerning the hiring or retention of an employee, the issuance of a security clearance, the letting of a contract, or the issuance of a license, grant or other benefit.

3. A record from this system of records may be disclosed, as a routine use, to a federal agency, in response to its request, in connection with the hiring or retention of an employee, the issuance of a security clearance, the reporting of an investigation of an employee, the letting of a contract, or

the issuance of a license, grant or other benefit by the requesting agency, to the extent that the information is relevant and necessary to the requesting agency's decision on the matter.

4. A record from this system of records may be disclosed, as a routine use, in the course of presenting evidence to a court, magistrate or administrative tribunal, including disclosures to opposing counsel in the course of settlement negotiations.

5. A record in this system of records which contains medical information may be disclosed, as a routine use, to the medical advisor of any individual submitting a request for access to the record under the Act and 22 CFR part 505 if, in the sole judgment of the Agency, disclosure could have an adverse effect upon the individual, under the provisions of 5 U.S.C. 552a(f)(3) and implementing regulations at 22 CFR 505.6.

6. The information contained in this system of records will be disclosed to the Office of Management and Budget in connection with the review of private relief legislation as set forth in OMB Circular No. A–19 at any stage of the legislative coordination and clearance process as set forth in that Circular.

7. A record from this system of records may be disclosed to an authorized appeal grievance examiner; a formal complaints examiner; an equal employment opportunity investigator; an arbitrator or other duly authorized official engaged in investigation or settlement of a grievance, complaint or appeal filed by an employee. A record from this system of records may be disclosed to the Office of Personnel Management in accordance with the Agency's responsibility for evaluation and oversight of federal personnel management.

8. A record from this system of records may be disclosed to authorized employees of a federal agency for purposes of audit.

9. Disclosure may be make to a congressional office from the record of an individual in response to an inquiry from the congressional office made at the request of that individual.

10. A record from this system of records may be disclosed, as a routine use, to the Department of State and its posts abroad for the purpose of transmission of information between organizational units of the Agency, or for purposes related to the responsibilities of the Department of State in conducting foreign policy or protecting United States citizens, such as the assignment of employees to positions abroad, the reporting of accidents abroad, evacuation of employees and dependents, and other purposes for which officers and employees of the Department of State have a need for the records in the performance of their official duties.

11. A record in this system of records may be disclosed, as a routine use, to a foreign government or international agency when necessary to facilitate the conduct of U.S. relations with that government or agency through the issuance of such documents as visas, country clearances, identification cards, drivers' licenses, diplomatic lists, licenses to import or export personal effects, and other official documents and permits routinely required in connection with the official service or travel abroad of the individual and her or his dependents.

12. A record in this system of records may be disclosed, as a routine use, to federal agencies with which the Agency has entered into an agreement to provide services to assist the Agency in carrying out its functions under the Foreign Assistance Act of 1961, as amended. Such disclosures would be for transmitting information between organizational units of the Agency, for providing to the original employing agency information concerning the services of its employee while under the supervision of the Agency, including performance evaluations, reports of conduct, awards and commendations and information normally obtained in the course of personnel administration and employee supervision, or for providing other information directly related to the purpose of the inter-agency agreement as set forth therein, and necessary and relevant to its implementation.

13. A record in this system of records may be disclosed, as a routine use, to the Department of Justice to determine whether disclosure thereof is required by the Freedom of Information Act (5 U.S.C. 552).

14. A record in this system of records may be disclosed, as a routine use, when the information is subject to exemption under the Freedom of Information Act (5 U.S.C. 552), but the Agency, in its discretion, determines not to assert the exemption.

15. A record from this system of records may be disclosed, as a routine use, only to state and local taxing authorities with which the Secretary of the Treasury has entered into agreements and only to those state and local taxing authorities for which the employee is subject to tax (whether or not tax is withheld).

Signed at Washington, DC, this 26th day of July 1990.

Alberto J. Mora,

General Counsel, United States Information Agency.

[FR Doc. 90–18160 Filed 8–3–90; 8:45 am]

BILLING CODE 8230–01

Sunshine Act Meetings

Federal Register
Vol. 55, No. 151
Monday, August 6, 1990

This section of the FEDERAL REGISTER contains notices of meetings published under the "Government in the Sunshine Act" (Pub. L. 94-409) 5 U.S.C. 552b(e)(3).

COMMISSION ON CIVIL RIGHTS

August 2, 1990.

DATE AND TIME: Tuesday, August 14, 1990, 9:00 a.m.—5:00 p.m.

PLACE: 1121 Vermont Avenue, NW., Room 512, Washington, DC 20425.

STATUS: Open to the Public.

MATTERS TO BE CONSIDERED:

I. Approval of Agenda
II. Approval of Minutes of June Meetings
III. Announcements
IRCA Update
IV. Indian Civil Rights Act Report
V. State Advisory Committee Reports
Rights of the Hearing Impaired—Illinois
Ageism Affecting . . . Older Workers—Vermont
VI. Staff Director's Report
—FY 92 Budget
VII. Future Agenda Items

CONTACT PERSON FOR FURTHER INFORMATION: Barbara Brooks, Press and Communications Division, (202) 376–8312.

Emma Monroig,
Solicitor.

[FR Doc. 90–18464 Filed 8–2–90; 2:47 pm]
BILLING CODE 6335–01–M

COMMODITY FUTURES TRADING COMMISSION

TIME AND DATE: 10:00 a.m., Tuesday, August 21, 1990.

PLACE: 2033 K St., NW., Washington, D.C., 8th Floor Hearing Room.

STATUS: Closed.

MATTERS TO BE CONSIDERED: Enforcement Matters.

CONTACT PERSON FOR MORE INFORMATION: Jean A. Webb, 254–6314.

Lynn K. Gilbert,
Deputy Secretary of the Commission.

[FR Doc. 90–18398 Filed 82–2–90; 11:00 am]
BILLING CODE 6351–01–M

COMMODITY FUTURES TRADING COMMISSION

TIME AND DATE: 10:00 a.m., Tuesday, August 28, 1990.

PLACE: 2033 K St., N.W., Washington, D.C., 5th Floor Hearing Room.

STATUS: Open.

MATTERS TO BE CONSIDERED: Program Objectives, first quarter, FY 1991.

CONTACT PERSON FOR MORE INFORMATION: Lynn K. Gilbert, 254–6314.

Lynn K. Gilbert,
Deputy Secretary of the Commission.

[FR Doc. 90–18399 Filed 8–2–90; 11:00 am]
BILLING CODE 6351–01–M

COMMODITY FUTURES TRADING COMMISSION

TIME AND DATE: 10:30 a.m., Tuesday, August 28, 1990.

PLACE: 2033 K St., NW., Washington, DC., 8th Floor Hearing Room.

STATUS: Closed.

MATTERS TO BE CONSIDERED: Enforcement Objectives.

CONTACT PERSON FOR MORE INFORMATION: Jean A. Webb, 254–6314.

Lynn K. Gilbert,
Deputy Secretary of the Commission.

[FR Doc. 90–18400 Filed 8–2–90; 11:00 am]
BILLING CODE 6351–01–M

COMMODITY FUTURES TRADING COMMISSION

TIME AND DATE: 11:00 a.m., Tuesday, August 28, 1990.

PLACE: 2033 K St., NW., Washington, DC., 8th Floor Hearing Room.

STATUS: Closed.

MATTERS TO BE CONSIDERED: Enforcement Matters.

CONTACT PERSON FOR MORE INFORMATION: Jean W. Webb, 254–6314.

Lynn K. Gilbert,
Deputy Secretary of the Commission.

[FR Doc. 90–18401 Filed 8–2–90; 11:00 am]
BILLING CODE 6351–01–M

COMMODITY FUTURES TRADING COMMISSION

TIME AND DATE: 11:30 a.m., Tuesday, August 28, 1990.

PLACE: 2033 K St., NW., Washington, DC, 8th Floor Hearing Room.

STATUS: Closed.

MATTERS TO BE CONSIDERED: Rule Enforcement Review.

CONTACT PERSON FOR MORE INFORMATION: Jean A. Webb, 254–6314.

Lynn K. Gilbert,
Deputy Secretary of the Commission.

[FR Doc. 90–18401 Filed 8–2–90; 11 am]
BILLING CODE 6351–01–M

FEDERAL DEPOSIT INSURANCE CORPORATION

Notice of Agency Meeting

Pursuant to the provisions of the "Government in the Sunshine Act" (5 U.S.C. 552b), notice is hereby given that at 2:02 p.m. on Tuesday, July 31, 1990, the Board of Directors of the Federal Deposit Insurance Corporation met in closed session to consider the following matters:

Recommendations concerning administrative enforcement proceedings.
Matters relating to the probable failure of certain insured banks.
Recommendation regarding an assistance agreement with a depository institution.
Recommendation regarding the Corporation's corporate activities
Matters concerning certain failed depository institutions.

In calling the meeting, the Board determined, on motion of Director C.C. Hope, Jr. (Appointive), seconded by Director Robert L. Clarke (Comptroller of the Currency), concurred in by Director T. Timothy Ryan, Jr. (Director of the Office of Thrift Supervision), and Chairman L. William Seidman, that Corporation business required its consideration of the matters on less than seven days' notice to the public; that no earlier notice of the meeting was practicable; that the public interest did not require consideration of the matters in a meeting open to public observation; and that the matters could be considered in a closed meeting by authority of subsections (c)(2), (c)(6), (c)(8), (c)(9)(A)(ii), and (c)(9)(B) of the "Government in the Sunshine Act" (5 U.S.C. 552b(c)(2), (c)(6), (c)(8), (c)(9)(A)(ii), and (c)(9)(B).

The meeting was held in the Board Room of the FDIC Building located at 550—17th Street NW., Washington, D.C.

Dated: August 1, 1990.

Federal Deposit Insurance Corporation.

Robert E. Feldman,
Deputy Executive Secretary.

[FR Doc. 90–18375 Filed 8–2–90; 9:16 am]
BILLING CODE 6714–01–M

NATIONAL LABOR RELATIONS BOARD

Notice of Meeting

TIME AND DATE: 11:00 a.m., Monday, July 30, 1990.

PLACE: Board conference Room, Sixth Floor, 1717 Pennsylvania Avenue, NW., Washington, DC 20570.

STATUS: Closed to public observation pursuant to 5 U.S.C. Section 552b(c)(2)

(internal personnel rules and practices (c)(6) (personal information where disclosure would constitute a clearly unwarranted invasion of personal privacy).

MATTERS CONSIDERED: Selection of Regional Directors for Region 9—Cincinnati—Ohio and Region 27—Denver—Dolorado.

CONTACT PERSON FOR MORE INFORMATION: John C. Truesdale, Executive Secretary, National Labor Relations Board, Washington, DC 20570, Telephone: (202) 254–9430.

Dated, Washington, DC, August 1, 1990.

By direction of the Board:

John C. Truesdale,

Executive Secretary, National Labor Relations Board.

[FR Doc. 90–18465 Filed 8–2–90; 2:59 pm]

BILLING CODE 7445–01–M

Corrections

Federal Register
Vol. 55, No. 151
Monday, August 6, 1990

This section of the FEDERAL REGISTER contains editorial corrections of previously published Presidential, Rule, Proposed Rule, and Notice documents. These corrections are prepared by the Office of the Federal Register. Agency prepared corrections are issued as signed documents and appear in the appropriate document categories elsewhere in the issue.

DEPARTMENT OF COMMERCE

International Trade Administration

Short-Supply Determination; Certain Modular Steel Scaffolding

Correction

In notice document 90-17606 beginning on page 30947 in the issue of Monday, July 30, 1990, make the following correction:

On page 30947, in the third column, in the seventh line, after "that", insert "they have received no inquiries for modular scaffolding from the customers listed by Layher. Patent, however, states that".

BILLING CODE 1505-01-D

ENVIRONMENTAL PROTECTION AGENCY

40 CFR Part 52

[FRL 3787-8]

Approval and Promulgation of Implementation Plans; Illinois

Correction

In rule document 90-13929 beginning on page 26814 in the issue of Friday, June 29, 1990, make the following corrections:

§ 52.741 [Corrected]

1. In § 52.741(a)(3), on page 26857, in the third column:

a. In the fourth paragraph *Application* should read *Applicator.*

b. In the 13th paragraph, "*coatings*" should read "*coating.*"

c. In the 14th paragraph, in the 3rd line, "76,000 1 (20,000" should read "76,000 l (20,000".

§ 52.741 [Corrected]

2. In the same section and paragraph, on page 26858, in the third column, in the 10th and 22nd lines from the end "1 (gal)." should read "l (gal).".

§ 52.741 [Corrected]

3. In § 52.741(a)(4)(i)(B)(*3*), on page 26864, in the second column "VOC:" should read "VOM:".

§ 52.741 [Corrected]

4. In § 52.741(a)(4)(v)(B), on page 26866, in the first column, in the 11th and the 15th lines from the end, "VOM/1" should read "VOM/l".

§ 52.741 [Corrected]

5. In § 52.741(a)(8)(ii), on page 26867, at the top of the second column the formula should have appeared thus:

$$P_{vol} = \sum_{i=1} P_i X_i$$

§ 52.741 [Corrected]

6. On pages 26868 and 26869, in § 52.741(e)(1)(i), in the table:

a. All identifying paragraph numbers corresponding with paragraph designations (A) through (J) should appear in italics.

b. In the note following table entry (A)(*3*), in the first line, "1 (gal)" should read "l (gal)".

c. In the note following table entry (H), in the second line, "0.95 1" should read "0.95 l".

d. The entry designated (K)(4) should be aligned with the other numerically designated entries in the table.

e. In the note following table entry (L)(*7*), in the first line "37.8 1" should read "37.8 l".

§ 52.741 [Corrected]

7. In § 52.741(e)(1)(ii)(C)(*1*), on page 26869, after the table, in the third column, in second line, "1/day" should read "l/day".

§ 52.741 [Corrected]

8. In § 52.741(e)(1)(ii)(C)(*2*), on the same page, in the same column, in the fourth from last line, "1 (gal)" should read "l (gal)".

§ 52.741 [Corrected]

9. On page 26870, in the second column, in § 52.741(e)(1)(iii):

a. In the second line "1 (gal)" should read "l (gal)".

b. The equation following the paragraph should have appeared as follows:

$$S = \frac{C}{1-(C/D)}$$

§ 52.741 [Corrected]

10. On page 26874, in the second column, in § 52.741(h), in the sixth line remove "on".

§ 52.741 [Corrected]

11. On the same page, in the same column, in § 52.741(h)(1)(ii)(A), in the equation at the bottom of the page, the "n" in the first and sixth lines should have appeared above the sigmas of the succeeding lines, and the third and eighth lines should appear as continuations of the second and seventh lines.

§ 52.741 [Corrected]

12. On the same page, in the same paragraph, in the third column:

a. In the 19th line "1 (gal)" should read "l (gal)".

b. In the equation, a rule should appear following the equal sign, and under the rule "V^{VMI}" should appear as "V_{VMi}".

c. In the 17th line from the end "1 (gal)" should read "l (gal)".

§ 52.741 [Corrected]

13. In § 52.741(h)(4)(i)(A)(*2*), on page 26875, in the third column, in the 5th and 10th lines from the bottom, "VOM/1" and "1/year" should read "VOM/l" and "l/year", respectively.

§ 52.741 [Corrected]

14. On page 26876, in § 52.741(h)(4)(ii)(A) (1st column) and (C)(*2*) (2nd column), in the 7th and 13th lines, respectively, add a comma after "section".

§ 52.741 [Corrected]

15. On page 36882, in the first column, in § 52.741(q)(1)(v) (A) and (B), in the second and third lines, respectively, the stand-alone-figure "1" should be a letter "l".

§ 52.741 [Corrected]

16. On page 26883, in the middle column, in the last line, under § 52.741(u)(3)(ii), "1" should read "l".

§ 52.741 [Corrected]

17. On the same page, in the third column, under § 52.741(v)(1)(i), all sectional references to "35 Ill. Adm. Code 215" should be preceded by the word "section" not section twists (§).

Part 52 Appendix B [Corrected]

18. On page 26889, at the top of the third column, in appendix B, section 7.1, the equation should appear without horizontal rules; also, the "n" and "j=1" of the equation should appear directly above and below "Σ" respectively.

Appendix B [Corrected]

19. On the same page, in the same column, under section 7.4, in each line of the equation, except the fourth, the first symbols should be aligned vertically.

Appendix B [Corrected]

20. On page 26891, in the second column, under "6. Nomenclature":

a. In the first entry, remove the plus sign, and at the end of the line "ft_2" should read "ft^2".

b. On the same page, in the same column, in the fourth line from the bottom, "1, ppm" should read "i, ppm".

c. On the same page, in the third column, in the sixth line from the top, "(m^3ppm)" should read "(m^3-ppm)".

Appendix B [Corrected]

21. On the same page, in the same column, in the equation appearing in section 7.2, the parenthetical should read "$(C_j = C_{Do})$".

Appendix B [Corrected]

22. On page 26895, in the third column, in "equation 1" the "n" and "j=1" should be aligned directly above and below the "Σ" respectively.

Appendix B [Corrected]

23. On page 26903 in section "7. Calculations":

a. Equations 1, 2, and 3, should appear under sections 7.1, 7.2, and 7.3, respectively; and

b. In equation 7.1, "W_{Fj}" should read "W_{ij}", and "W_{Fj}" should be inserted before the plus sign.

BILLING CODE 1505-01-D

NATIONAL ARCHIVES AND RECORDS ADMINISTRATION

36 CFR Part 1222

RIN 3095-AA45

Creation and Maintenance of Records; Adequate and Proper Documentation

Correction

In rule document 90-15442 beginning on page 27422 in the issue of Monday, July 2, 1990, make the following corrections:

§ 1222.12 [Corrected]

1. On page 27423, in the third column, in § 1222.12(b)(5), in the fourth line, insert "materials not only actually" after "covers".

§ 1222.36 [Corrected]

2. On page 27425, in the first column, in § 1222.36(a)(3), in the third line, insert "not" after "are".

BILLING CODE 1505-01-D

NATIONAL ARCHIVES AND RECORDS ADMINISTRATION

36 CFR Part 1228

RIN 3095-AA46

Disposition of Federal Records

Correction

In rule document 90-15443 beginning on page 27426 in the issue of Monday, July 2, 1990, make the following correction:

§ 1228.28 [Corrected]

On page 27430, in the first column, in § 1228.28(c), in the second line, insert "are" after "records".

BILLING CODE 1505-01-D

federal register

Monday
August 6, 1990

Part II

Department of Labor

Occupational Safety and Health Administration

29 CFR Part 1910

Electrical Safety-Related Work Practices; Final Rule

DEPARTMENT OF LABOR

Occupational Safety and Health Administration

29 CFR Part 1910

[Docket S-016]

RIN 1218-AA32

Electrical Safety-Related Work Practices

AGENCY: Occupational Safety and Health Administration (OSHA), U.S. Department of Labor.

ACTION: Final rule.

SUMMARY: The Occupational Safety and Health Administration (OSHA) is issuing a new standard on electrical safety-related work practices for general industry. These performance-oriented regulations complement the existing electrical installation standards. The new standard includes requirements for work performed on or near exposed energized and deenergized parts of electric equipment; use of electrical protective equipment; and the safe use of electric equipment. Compliance with these safe work practices will reduce the number of electrical accidents resulting from unsafe work practices by employees.

OSHA is also amending miscellaneous provisions in the general industry standards to: (1) Change existing regulations referring to the 1971 National Electrical Code so that they will refer instead to OSHA's electrical standards; (2) remove existing electrical work-practice requirements from other parts of the general industry standards so that all general electrical safety-related work practices will be covered in the electrical safety standards; and (3) remove an existing provision relating to construction from the general industry electrical safety standards. These changes promote uniformity and reduce redundancy among the general industry standards.

EFFECTIVE DATE: The final rule, except for § 1910.332, becomes effective on December 4, 1990. Section 1910.332 becomes effective on August 6, 1991.

FOR FURTHER INFORMATION CONTACT: Mr. James F. Foster; U.S. Department of Labor, Occupational Safety and Health Administration, room N3637; 200 Constitution Avenue, NW., Washington, DC 20210 (202-523-8148).

SUPPLEMENTARY INFORMATION:

I. Background

A. Electric Shock

It is well known that the human body will conduct electricity, and that if direct contact is made with an electrically energized part while a similar contact is made simultaneously with another conductive surface which is maintained at a different electrical potential, a current will flow, entering the body at one contact point, traversing the body and then exiting at the other contact point, usually the ground. Each year many workers suffer pain, injuries, and death from such electric shocks. OSHA estimates that there are more than 100 electrical fatalities in general industry each year.

The effects that electric shock will have on an individual will depend upon the type of circuit, its voltage, resistance, and amperage, the pathway through the body, and the duration of the contact. For example, electric shocks produced by alternating currents of power line frequency (normally 60 Hertz) passing through the body of an average adult from hand to foot for 1 second can cause various effects, starting from a condition of being barely perceptible at 1 milliampere to involuntary muscular control from 9 to 25 milliamperes. The passage of still higher currents can produce ventricular fibrillation of the heart (cessation of rhythmic pumping action) from 75 milliamperes to 4 amperes, and finally immediate cardiac arrest at over 4 amperes. Nearly instantaneous fatalities from electric shock can result from either direct paralysis of the respiratory system (at 20 milliamperes or more), failure of the heart to pump due to ventricular fibrillation (at 75 milliamperes or more), or immediate and complete heart stoppage (at 4 amperes or more). Even if the shocking current does not pass through vital organs or nerve centers, severe injuries such as deep internal burns can still occur. In some cases, injuries caused by electric shock can be a contributory cause of delayed fatalities.

Burns suffered in electrical accidents are also of great concern. These burns may be of three basic types: electrical burns, arc burns and thermal contact burns. Electrical burns are the result of the electric current flowing in the tissues and may be either skin deep or may affect deeper layers (muscles, bones, etc.) or both. Tissue damage is caused by the heat generated from the current flow; if the energy delivered by the electric shock is high, the body cannot dissipate the heat and the tissue is burned. Typically, such electrical burns are slow to heal. Arc burns, on the other hand, are the result of high temperatures produced by electric arcs or by explosions close to the body. These burns are similar to burns and blisters produced by any high temperature source. Finally, thermal contact burns are those normally experienced from the skin's contacting hot surfaces of overheated electric conductors, conduits, or other energized equipment. All types of burns may be produced simultaneously.

Electric shock currents, even at levels as low as 3 milliamperes, can also cause injuries of an indirect or secondary nature. In this case, the involuntary muscular reaction from the electric shock can cause bruises, bone fractures, and even death resulting from collisions or falls.

B. Hazards Associated With Electricity

Most electrical systems use the earth to establish a voltage reference system with respect to ground. This is done by connecting a portion of the circuit to ground. Since these systems use conductors which have voltages to ground, a shock hazard exists for persons who are in electrical contact with the earth and are exposed to the conductors. If a person comes in contact with an ungrounded conductor while that person is in contact with the ground, he or she becomes part of the circuit and current passes through his or her body.

In addition to the shock hazard, electricity poses other hazards to employees. For example, when a short circuit occurs or current flow is interrupted, hazards are created from the resultant arcs. If the current involved is great enough, these arcs can cause injury or can start a fire. Fires can also be created by overheating equipment or by conductors carrying too much current. Extremely high-energy arcs can damage equipment causing fragmented metal to fly in all directions. In atmospheres which contain explosive gases or vapors or combustible dusts, even low-energy arcs can cause violent explosions.

C. Nature of Electrical Accidents

Electrical accidents, when initially studied, often appear to be caused by circumstances which are varied and peculiar to the particular incidents involved. However, further consideration usually reveals the underlying cause to be a combination of three possible factors; i.e., work involving unsafe equipment and installations, workplaces made unsafe by the environment, and unsafe work performance (unsafe acts).

For purposes of convenience, the first and second accident-causing situations are sometimes combined and simply referred to as unsafe conditions. Thus, electrical accidents can be generally

considered as being caused by unsafe conditions, unsafe acts, or, in what is usually the case, combinations of the two. It should also be noted that inadequate maintenance can cause equipment or installations which were originally considered safe to deteriorate, resulting in an unsafe condition.

Some unsafe electric equipment and installations can be identified, for example, by the presence of faulty insulation, improper grounding, loose connections, defective parts, ground faults in equipment, or unguarded live parts. The environment can also be a contributory factor to electrical accidents in a number of ways. For example, environments containing flammable vapors, liquids or gases, areas containing corrosive atmospheres, and wet and damp locations are some unsafe environments affecting electrical safety. Finally, some unsafe acts can be recognized as, typically, the failure to deenergize electric equipment when it is being repaired or inspected, the intentional use of obviously defective and unsafe tools, or the use of tools or equipment too close to energized parts.

D. Protective Measures

There are various general ways of protecting employees from the hazards of electric shock, including insulation and guarding of live parts. Insulation provides an electrical barrier to the flow of current. To be effective, the insulation must be appropriate for the voltage, and the insulating material must be undamaged, clean, and dry. Guarding prevents the employee from coming too close to energized parts. It can be in the form of a physical barricade, or it can be provided by installing the live parts out of reach from the working surface. (This technique is known as "guarding by location.")

Grounding is another method of protecting employees from electric shock; however, it is normally a secondary protective measure. To keep guards or enclosures at a common potential with earth, they are connected, by means of a grounding conductor, to ground. In addition, grounding also provides a path of low impedance and of ample capacity back to the source to pass enough current to operate the overcurrent devices in the circuit. If a live part accidentally comes in contact with a grounded enclosure, current flow is directed back to earth, and the circuit protective devices (e.g., fuses and circuit breakers) can interrupt the circuit.

These protective measures help ensure the safe installation of electric equipment and are prescribed by the regulations presently contained in 29 CFR part 1910, subpart S. Addressing common unsafe conditions, these rules cover such safety considerations as guarding and insulation of live parts, grounding of equipment enclosures, and protection of circuits from overcurrent.

However, even though equipment may be in compliance with the installation requirements in subpart S, the employee is still exposed to electrical hazards. An unsafe work practice can increase the gravity of the hazards, which under normal conditions would be controlled and would pose no serious risk to the worker. For example, an employee carrying a ladder could approach exposed live parts that are guarded by installation beyond normal reaching distance. The employee's bringing the ladder close to the live parts exposes the worker to hazards much greater than those present under usual working conditions.

When employees are working with electric equipment, they must use safe work practices. Such safety-related work practices include keeping a prescribed distance from exposed energized lines, avoiding the use of electric equipment when the employee or the equipment is wet, and locking-out and tagging equipment which is deenergized for maintenance.

Another important safety practice involves the use of electrical protective devices, such as rubber gloves and rubber mats for the purpose of insulation against live parts, or live-line tools for purposes of both insulation and manipulation of energized parts from a distance. However, to assure the protection of the employee, this equipment must be properly manufactured and maintained. Regular maintenance is an important consideration in order to keep this equipment from deteriorating into an unsafe condition.

E. Need for Final Regulation

The current electrical safety standards contained in subpart S of part 1910 provide employees with protection from hazards posed by electrical installations. By requiring such protective measures as guarding of live parts and grounding of equipment enclosures, the current regulations make most types of electric equipment reasonably safe under normal conditions.

However, even normally safe equipment can pose hazards under certain conditions. A few illustrations may help to underscore this point. To guard overhead power lines from contact by the public, electric utility companies install the lines at heights which cannot be reached by persons standing on the ground. This protective measure serves its purpose well, until someone approaches a power line with a long ladder or a crane. Since the overhead power lines were not designed to provide complete protection under such circumstances, safe work practices (e.g., maintaining a safe distance) must be used to minimize the hazards involved.

Another common example of a normally safe installation posing hazards is equipment undergoing maintenance. Under normal operating conditions, live parts of equipment are required to be guarded from contact by employees. However, when the equipment must be disassembled for maintenance or repair, the normally enclosed electrical parts become exposed. Therefore, during maintenance, certain work practices must be used to prevent contact with the necessarily exposed parts while they are energized. Typical safety-related work practices used in such situations include equipment deenergizing, lockout and tagging procedures, and the use of personal protective equipment.

Electric equipment can also be used under circumstances that pose unexpected hazards. For example, using an ordinary portable electric drill, a worker can ignite flammable vapors from paint thinner being used nearby. The existing electrical safety standards contain provisions dealing with electrical installations in hazardous locations. However, they do not directly address the hazards involved with the use of electric equipment in areas in which hazardous concentrations of flammable gases or vapors may accumulate temporarily and infrequently. In such circumstances, safety-related work practices must be used to control the hazards involved. With respect to the electrical hazards, such practices could include the use of additional ventilation or the shutdown of electric equipment while hazardous quantities of the vapors are present.

As previously noted, the current electrical standards in subpart S of the General Industry Standards cover electrical installations rather than work practices; the few safety-related work practice standards that do exist are distributed in other subparts of 29 CFR part 1910. However, although unsafe work practices appear to be involved in most workplace electrocutions, OSHA has very few regulations addressing work practices necessary for electrical safety.

Unsafe work practices appeared to be a factor in about three-fourths of the electrocutions included in Exhibit 8 (which is discussed in the next section

of the preamble). Because of this, OSHA has concluded that standards are needed to minimize these hazards.

On September l, 1989, OSHA promulgated a standard on the control of hazardous energy sources (lockout/tagout). This new standard addresses practices and procedures that are necessary to disable machinery or equipment and to prevent the release of potentially hazardous energy while maintenance and servicing activities are being performed. Although this rule covers electrical energy sources, it specifically excludes "exposure to electrical hazards from work on, near, or with conductors or equipment in electric utilization installations, which is covered by subpart S of this part." Thus, the generic lockout/tagout standard does not cover electrical hazards, and there is a gap in protection for electrical workers. The final electrical safety-related work practices standard will fill that gap with provisions that specifically pertain to electrical hazards of equipment maintenance and servicing.

Various national consensus standards, such as American National Standards Institute (ANSI) standards, address electrical safety-related work practices for particular types of equipment and operations. For example, American National Standard for Personnel Protection—Lockout/Tagout of Energy Sources—Minimum Safety Requirements (ANSI Z244.1–1982) addresses the electrical and other hazards of servicing and maintaining equipment. Also, American National Safety Code for Crawler, Locomotive, and Truck Cranes, ANSI B30.5, requires a minimum clearance of 10 feet for cranes operated near overhead power lines. Similarly, ANSI Z49.1, Safety in Welding and Cutting, contains electrical work practice requirements for the use of welders. OSHA previously adopted these last two consensus standards (in 29 CFR 1910.180 and 1910.252, respectively) under section 6(a) of the OSH Act (29 U.S.C. 655(a)); and, in some part, they have helped reduce electrical accidents. However, these "specialized" standards are limited in their areas of concern and do not address safe electrical work practices generally. Within the last 10 years, though, the National Fire Protection Association (NFPA) recognized the need for a general electrical safety-related work practice standard and adopted part II of NFPA 70E, Electrical Safety Requirements for Employee Workplaces.

Based on the considerable number of electrocutions occurring in situations for which no OSHA safety standards exist, OSHA has determined that a significant risk of death or serious injury exists (even in workplaces in compliance with existing OSHA standards), and the Agency has decided that a comprehensive electrical safety-related work practice standard is necessary for the protection of employees.

F. Accident Patterns

During this rulemaking, OSHA collected accident summaries (Exhibit 8) from the Agency's Integrated Management Information System (IMIS). These accident summaries were analyzed, and the results were compared to the survey of OSHA preliminary fatality/catastrophe event reports used in the development of the proposal. The new data covered the period of approximately April 1984 to December 1986. However, for various reasons, the OSHA fatality reports did not record all occupational electrocutions occurring in this period. For example, despite reporting requirements, some fatalities are simply never reported to OSHA. There has also been evidence that, in the past, some electrocutions have been mistakenly identified as heart attacks. (See, for example, the preamble to the final ground-fault protection standard at 41 FR 55697.) Presumably, this could have occurred during the period in question. Additionally, some accident reports submitted for this period were not reviewed in time to be entered into the database. Further, the IMIS data base does not include reports from all states with their own approved OSHA programs. Despite this underreporting, the available fatality information indicates that there is a serious problem.

In reviewing the data, OSHA divided the accidents into industry groups, as given in Table 1.

The Agency is limiting this rulemaking to the prevention of accidents in general industry and maritime (which has even fewer electrical safety requirements than general industry) because to include other industrial sectors (such as construction) would seriously impede the rulemaking process. Inclusion of other industries in the scope of the standard would require the Agency to consider many possible diverse situations requiring safety-related work practices that are likely to be germane only to these industries. The construction industry, for example, is an extensive user of temporary wiring, which is frequently moved and is often used under a wide range of environmental conditions. Such situations often affect the type of electrical safety-related work practices recommended for use. Within the past few years, OSHA revised its electrical standards for construction, subpart K of part 1926, which incorporate various electrical safety-related work practices that address the particular electrical hazards present in the construction industry (51 FR 25294). Additionally, under the Construction Safety Act and 29 CFR 1911.12, OSHA is required to consult with the Advisory Committee for Construction Safety and Health before issuing proposed rules affecting construction, to assure that the unique aspects of construction work are taken into consideration by the Agency.

Reasons for excluding work on telecommunications installations and work on electric power generation, transmission, and distribution installations are given in section III of this preamble. A proposed standard for the protection of employees engaged in electric power generation, transmission, and distribution work (only for electric utilities and their contractors) was published in the **Federal Register** on January 31, 1989 (54 FR 4974).

Therefore, of particular interest at this time are the 128 fatalities and 98 injuries occurring in general industry. A general breakdown of the accidents, by type, is given in Table 2. A review of the circumstances surrounding the accidents appears to indicate that an unsafe work practice, or a combination of unsafe work practices, was involved in about three fourths of the electrical fatalities.

TABLE 1—ELECTRICAL FATALITIES BY INDUSTRY—APRIL 1984 TO DECEMBER 1986 [1]

Industry	Applicable standard (29 CFR)	No. of fatalities	No. of hospitalized injuries	No. of non-hospitalized injuries
General Industry [2]	Part 1910, Subpart S	128	78	20
Construction [2]	Part 1926, Subpart K	127	46	16
Telecommunications	§ 1910.268	7	3	0

TABLE 1—ELECTRICAL FATALITIES BY INDUSTRY—APRIL 1984 TO DECEMBER 1986 [1]—Continued

Industry	Applicable standard (29 CFR)	No. of fatalities	No. of hospitalized injuries	No. of non-hospitalized injuries
Power Transmission and Distribution	Construction—Part 1926, Subpart V; Operation and Maintenance—Separate Rulemaking (Proposed § 1910.269).	59	34	3
Maritime	Parts 1915–1918 and Part 1910, Subpart S	1	0	0

[1] Only accidents reviewed for this period are included. Some accidents that occurred during this period were not reviewed at the time the exhibit was entered into the record. (Most of the records for 1984 and 1985 were reviewed; few from 1986 were reviewed.)
[2] Excluding Telecommunications and Power Transmission and Distribution.

TABLE 2—ELECTRICAL ACCIDENTS BY UNSAFE ACT—APRIL 1984 TO DECEMBER 1986

Category No. and Unsafe Event	No. of fatal.	No. of hosp. inj.	No. of non-hosp. inj.
i. Use of equipment or material too close to exposed energized lines:—Total	47	17	8
a Vehicles (e.g., cranes and dump trucks)	27	14	6
b Other mechanical equipment (e.g., augers and derricks)	8	0	1
c Tools and materials (e.g., ladders and tree limbs) [1]	12	3	1
ii. Failure to use electrical protective equipment [1]	5	3	0
iii. Assuming an unsafe position [1]	20	4	4
iv. Failure to deenergize (and lockout/tag) equipment [1]	13	3	1
v. Use of visibly defective electric equipment [1]	12	6	3
vi. Blind reaching, drilling, digging, etc	3	0	0
vii. No unsafe work practice or not enough information to classify properly	28	45	4
Total	126	78	20

[1] These categories contain common elements and therefore overlap. For illustration, the electrocution of an employee who contacted an overhead power line while working from a ladder could be placed into category (ii), no protective equipment, or in category (iii), unsafe working position. The accident would be placed into one of these categories depending on whether he or she was qualified to use protective equipment and work very close to the power lines.

Unsafe work practices may result from such factors as inattentiveness, lack of training, or poor supervision. From the aforementioned reports, it is not always possible to determine the level of training involved, the employers' work rules, or other secondary factors which may have contributed to the accidents. Additionally, even though unsafe work practices were involved in many accidents, unsafe conditions were sometimes present at the same time. (For example, see category (v).) The data presented here are merely being used to demonstrate that unsafe work practices are significant contributors to electrical accidents and that they should be addressed in OSHA's regulations. It should be noted that, even with 100 percent compliance with OSHA's current General Industry Standards, most of the accidents (67 percent) given in categories (i) through (vi) in Table 2 would still have occurred.

Within each category in Table 2, the accidents are very similar in nature. From the fatality reports, OSHA can describe a typical accident for each of the first six categories (with the provision of the standard which most directly addresses the hazard in parentheses) as follows:

(i) *Use of equipment or material too close to exposed energized lines.* (a) *Vehicles.* An employee was operating a hydraulic tilt-frame hoist beneath overhead power lines, trying to pick up a dumpster that was filled with hazardous chemical waste. The overhead line was 24 feet, 4 inches above the ground. The operation was located at the approximate midpoint between two utility poles. The first employee was operating the controls, which were located on the driver's side of the trailer. He was standing on the ground, which was semisoft because the air temperature was 40 degrees, F. (There was light snow on the ground, and the sun was shining.) A second employee attached the cable from the hoist to the dumpster. The second employee and two others were standing at the rear of the trailer, where it made contact with the dumpster. The truck and trailer were about 56 feet long, and the dumpster about 35 feet long. The operator had the tilt frame about 4 to 5 inches away and tried to pull up the dumpster. The strain on the trailer lifted the mast into the overhead line (34 kilovolts phase to phase, 19.9 kilovolts phase to ground). The second employee saw the operator being shocked and ran to aid him with the other two employees right behind. The second employee threw himself at the operator to knock him off the controls. He then received an electric shock and burns. The other two employees tried to grab the operator, but were knocked down by the current. Eventually, they pulled the operator away, but too late to save him from electrocution. (§ 1910.333(c)(3)(iii))

(b) *Other mechanical equipment.* An employer assigned two employees to drill soil samples at a worksite. The drill rig was set up at the site, and four holes were drilled. During the process of drilling a fifth hole, the rig was set near an overhead power line. When the boom was raised, contact was made with the 12-kilovolt overhead power line (7200 volts phase to ground), electrocuting one employee and shocking the other. (§ 1910.333(c)(3)(iii))

(c) *Tools and materials.* A maintenance crew leader was using an iron measuring rod to check the level of a storage tank. When he pulled the rod out, it struck an overhead power line. He died from pulmonary emboli due to electric shock. (§ 1910.333(c)(3)(i)(B) and (c)(6))

(ii) *Failure to use electrical protective equipment.* An electrician was working without rubber insulating gloves, even though protective gloves had been provided. He was changing an electric cable in a panel board energized at 480 volts. As he was trying to pass the cable between the vertical bars, his arm touched the cable. He was electrocuted. (§§ 1910.333(c)(2) and 1910.335(a)(1)(i))

(iii) *Assuming an unsafe position.* Two employees of a trucking firm were delivering a 10-kilovolt-ampere transformer to a substation. A 19.5-kilovolt overhead power line was located about 20 feet from the ground, 6 feet from the top of the transformer. One of the employees climbed the transformer to remove the chain binders. Bending over, he loosened a clevis and, as he stood up, contacted the power line. He was electrocuted; and the other employee, who was holding onto the chain, received an electric shock, which caused second and third degree burns. (§ 1910.333(c)(3)(i)(A))

(iv) *Failure to deenergize (and lockout/tag) equipment.* While an employee was operating a gang-nail-plate press machine, the shop foreman brought a loose cable connection to his attention. The employee subsequently opened a junction box mounted on the machine and attempted to tighten the nut holding the cable. The nut was on the inside of the box, but the employee did not deenergize the circuit to the junction box. He made contact with energized parts within the box and was electrocuted. (§ 1910.333(b)(2))

(v) *Use of visibly defective electric equipment.* An employee was installing equipment in an area between a temperature control unit and an injection molding machine. The keyed prong for the grounded conductor of the portable temperature control unit had been modified so that the plug could be inserted into the receptacle in any position. At the time of the accident, the plug was inserted so that the prong for the grounded conductor was in the slot intended for the ungrounded conductor. When the employee contacted the energized frame of the temperature control unit and the grounded injection molding machine, he was electrocuted. (§ 1910.334(a)(2))

(vi) *Blind reaching, drilling, digging, etc.* A printing machine operator was having problems restarting the motor on a gilder machine. He opened the right door on the 480-volt gilder relay control panel. With the left door closed and the disconnect handle in the "on" position, he tried to reset the relays. When he could not find the tripped relay on the right side, he reached behind the closed left door. He made contact with live parts energized at 480 volts and was electrocuted. (§ 1910.333(c)(4)(ii))

G. Significant Risk

In order to promulgate safety regulations, OSHA must show that the hazard the Agency proposes to address presents a significant risk to employee safety. As part of the preliminary analysis for the electrical safety-related work practices proposal, OSHA determined the population at risk, the industries and occupations presenting major risks, and the incidence and severity of injuries attributable to the failure to establish safe work practices. Finally, in keeping with the purpose of safety standards to prevent accidental injuries and deaths, OSHA estimated the number of accidents that would be prevented by the regulation.

Although nearly every worker in general industry is exposed to electrical hazards, some are at much greater risk than others. Employees at appreciably greater risk include, (a) those in industries that have the highest incidence rates of electrical accidents and (b) those in occupations considered high risk for electrical hazards. JACA Corporation, in their "Regulatory Assessment of the Impact of the Proposed Electrical Safety-Related Work Practices Standard" (Exhibit No. 1), characterized the frequency at which electrical accidents occur and tabulated the relative risk between industries. Among industries covered by the standard, the highest relative risks are encountered in the following industries: Lumber and wood products; rubber and miscellaneous plastics products; stone, clay, and glass products; primary metal; and miscellaneous repair services. Industries with a relatively low risk are concentrated in the finance, insurance, and real estate industries. According to the JACA report and excluding jobs not addressed by the proposal (such as electric distribution and transmission line workers), the highest electrical accident rates are faced by electricians and apprentices, stationary engineers, mechanics and repairmen, structural metal craftsmen, and welders. Low rates are encountered by personnel in the sales and clerical fields.

OSHA has estimated that more than 3,100 injuries and 69 fatalities (concentrated within a high risk group of about 2.1 million workers) could be prevented each year through compliance with the safety-related work practices contained in the final standard. (A detailed analysis of the benefits of the standard and a description of the methodology used can be found in chapter V of OSHA's final regulatory analysis, which is available for inspection and copying in Docket S-016 in the Docket Office.)

The particular injuries that the safe work practices standard will prevent include electric shocks, burns, and the indirect injuries that result when electric shocks occur. (Indirect injuries are typically bruises, bone fractures, and even deaths that occur due to the involuntary muscular reactions that follow electric shocks.) Although some injuries only involve minor shocks and burns, many victims suffer disabling effects, some are killed by electrocution, and still others die from indirect injuries, such as those incurred in falls. Therefore, the frequency and seriousness of injuries to be prevented clearly demonstrate a significant risk that is being addressed by this final standard.

II. Development of the Final Standard

A. Present Electrical Standards

In 1976, the National Fire Protection Association (NFPA) created the "70E Committee" to prepare a consensus standard for possible use by OSHA in developing a proposed revision of the Agency's electrical safety standards. The 70E Committee visualized a standard consisting of four major parts:

Part I—Installation Safety Requirements
Part II—Safety-Related Work Practices
Part III—Safety-Related Maintenance Requirements
Part IV—Safety Requirements for Special Equipment

The name given to this new document became NFPA 70E, "Electrical Safety Requirements for Employee Workplaces."

The NFPA 70E Committee derived part I from the National Electrical Code (NEC). OSHA reviewed the 70E document, which the NFPA approved, and used it as the foundation for proposing a revision (44 FR 552744) to 29 CFR part 1910, subpart S—the electrical standards for General Industry. After a public comment period and an informal hearing, the revised subpart S was published as a final rule in the **Federal Register** (46 FR 4034) on January 16, 1981. The standard covers the safe installation of electric utilization equipment.

While OSHA was revising its standards using NFPA 70E, part I, the 70E Committee was completing its work on part II.

After considering the views and recommendations of the experts on the committee and comments from the public, NFPA approved the 70E Committee's standard on electrical safety-related work practices. Thus, NFPA 70E, part II, "Safety-Related Work Practices," became a national consensus standard.

B. Use of NFPA 70E, Part II, as a Base Standard

In the development of the proposal, OSHA evaluated NFPA's electrical safety-related work practice standard. In areas which overlapped other

consensus standards not presently adopted by OSHA, the NFPA document was compared with those other standards with respect to consistency and with respect to effectiveness in providing employee safety. For example, the NFPA requirements on lockout of equipment were compared to ANSI Z244.1, Lockout/Tagout of Energy Sources, so that OSHA could determine which requirements could most effectively protect employees from electrical hazards. In this case, as in most others, the NFPA standard more directly addressed electrical hazards than did the ANSI document, although OSHA believes that NFPA 70E was sometimes overly detailed or too specification-oriented. In comparison to other national consensus standards, NFPA's electrical safety-related work practices appeared to be more effective in providing employee safety for work performed on, near, or with electric components, equipment, or circuits and appeared to be consistent with current industry practice.

OSHA also examined provisions of NFPA 70E which were comparable to existing OSHA regulations. For example, OSHA compared § 1910.180(j), dealing with the operation of cranes near overhead lines, with similar requirements in the NFPA standard. As a result, OSHA discovered that, while the 70E committee referred to OSHA's regulations in § 1910.180(j) in providing for a 10-foot minimum clearance, they provided smaller clearance distances in NFPA 70E for other types of equipment used near overhead power lines. In this area, NFPA 70E seemed to be less effective in protecting employees. In most other areas, however, the 70E requirements were at least as protective as OSHA's.

Finally, OSHA evaluated whether the requirements of NFPA 70E, part II, were directed towards the apparent causes of electrical accidents. In addition to the previously mentioned OSHA survey, the Agency also reviewed electrical accident data provided by California, Florida, and other States. For every requirement set forth in part II of NFPA 70E, OSHA found injuries or fatalities which were directly relevant. For instance, the lockout/tagout requirements of Chapter 4 were found to relate specifically to accidents in category (iv) presented previously in Table 2. However, it was not always possible to relate every specification in the 70E provisions on lockout of equipment to a particular causative factor presented in the accident descriptions.

OSHA thoroughly reviewed NFPA's consensus standard on Electrical Safety-Related Work Practices and determined that it was an appropriate document on which to base a proposed rule. Although the format and outline of the NFPA standard were not entirely suitable, the basic requirements were generally valid and related well to causes of electrical accidents. Where necessary, in developing its proposed rule, OSHA reorganized and edited the national consensus standard to fit the Agency's regulatory needs. For the most part, however, the final standard, as did the proposal, contains the same requirements as part II of NFPA 70E. A performance-oriented approach addressing the causes of these accidents is thus maintained. As a consequence, the methods of compliance remain flexible.

Whenever a rule promulgated by OSHA differs substantially from an existing national consensus standard, section 6(b)(8) of the Occupational Safety and Health Act (29 U.S.C. 655(b)(8)) requires the Agency to state the reasons why the rule as adopted will better effectuate the purposes of the Act than the national consensus standard. Toward this end, OSHA conducted a detailed comparative analysis of NFPA 70E, part II and OSHA's final regulations. This analysis, in the form of a paragraph-by-paragraph comparison, is available for inspection and copying in Docket S–016 in the Docket Office. Individual provisions of the final rule are discussed in greater detail in Section III of this preamble. The relatively few significant differences exist because of OSHA's expectation that overall employee safety will be improved.

C. History of the Regulation

On November 30, 1987, OSHA published the proposed standard on electrical safety-related work practices (52 FR 45530; correction notice: 53 FR 2047). This proposal was intended to supplement the existing electrical installation requirements contained in 29 CFR part 1910, subpart S, and were based on the provisions of NFPA 70E, part II. Interested parties were given until February 29,1988, to submit written comments on the proposal, to file objections, and to request a hearing.

OSHA received 45 comments on the proposal, including 6 requests for a hearing. In response to the hearing requests and in accordance with section 6(b)(3) of the Occupational Safety and Health Act, OSHA published a notice announcing an informal public hearing and listing the issues to be discussed at the hearing (53 FR 21694). The hearing was held on August 9 and 10, 1988, in Washington, DC.

At the close of the public hearing, Administrative Law Judge Aaron Silverman set the deadlines for the submission of additional information and for the filing of briefs by the participants to be September 12 and November 21, 1988, respectively. At the request of one of the hearing participants, Judge Silverman subsequently extended the deadline for receipt of additional information to October 11, 1988. Judge Silverman issued an order receiving the post-hearing comments and closing the record on November 3, 1989. At the same time, he certified the record to the Assistant Secretary of Labor for OSHA.

The comments received in response to the notices of proposed rulemaking and of public hearing, the written transcript of the hearing, and the exhibits submitted at the hearing and during the post-hearing period allowed for such submissions constitute the rulemaking record for this proceeding. The entire record was carefully considered in the preparation of this final rule.

III. Summary and Explanation of Final Standard

This section discusses the important elements of the final standard and explains any significant differences between it and the source document, NFPA 70E, part II. This section also discusses and resolves issues that were raised at the public hearing, significant comments received as part of the rulemaking record, and substantive changes from the language of the proposed rule. References in parentheses are to exhibits and transcript pages in the rulemaking record.

A. § 1910.331

Section 1910.331 sets forth the scope of the regulations. According to this section, the standard covers electrical safety-related work practices of employees who work on, near, or with electric circuits and equipment. Types of work performed by qualified persons which are not covered by the regulations are also listed. Although the scope is similar to that of NFPA 70E and to existing § 1910.302(a), there is a key difference. Briefly, the NFPA standard and § 1910.302(a) state that certain installations,[1] rather than types of work, are not covered.

[1] Namely: Installations in mines; in ships and other watercraft; in aircraft; in automotive vehicles, except for mobile homes and recreational vehicles; in railway rolling stock, including railway facilities

Continued

The work practice standard does not apply to "qualified persons" (as defined in § 1910.399 and discussed later in this preamble) performing work on or directly associated with these same types of installations because the work practices in this standard do not address the types of electrical hazards faced by such workers performing this type of work. However, employees who are working at these installations but who are not "qualified" are covered by §§ 1910.331 through 1910.335. Safety-related work practices used by qualified employees who are performing work not covered in this regulation are addressed in other standards, such as 29 CFR part 1926, subpart V (power transmission and distribution); 29 CFR 1910.268 (telecommunications); and ANSI C2 (electric supply). This last standard has not been adopted by OSHA, but the Agency has proposed a separate standard, based in part on ANSI C2, for work practices to be used with electric power generation, transmission, and distribution systems (54 FR 4974, January 31, 1989).

Noting that work by qualified persons on these special installations was not covered by the proposal, several commenters questioned the adequacy of the definition of "qualified person" (Ex. 4–9, 4–13, 4–20, 4–26, 4–29). "Qualified person" is currently defined in § 1910.399 as: "One familiar with the construction and operation of the equipment and the hazards involved." "Qualified persons" are intended to be only those who are well acquainted with and thoroughly conversant in the electric equipment and electrical hazards involved with the work being performed. As used in the standard, the term connotes different qualifications for different tasks. For example, with respect to § 1910.331(c)(1), which exempts qualified linemen working on transmission lines, a qualified person would be one who understands the construction and operating characteristics of the transmission line and who has a thorough knowledge of the hazards involved in the type of work being performed on the line. On the other hand, this provision would not ordinarily exempt a transportation worker using a boom mounted on a flat bed truck to unload concrete blocks at a site near overhead distribution lines. This type of employee would not normally be expected to understand the construction and operation of the lines, nor would this person likely be completely knowledgeable in the hazards involved.

One hearing participant suggested that the definition of "qualified person" be clarified to rest upon one's competence to perform a task safely, such as trimming trees near overhead lines (Ex. 26). The commenter claimed that the proposal required tree trimmers to have a lineman's knowledge of electric utility generation equipment. The definition does require a qualified person to be "familiar with construction and operation of the equipment * * * involved." However, a detailed knowledge of power generation equipment is not relevant to the task of trimming trees near overhead power lines, nor is it required by the definition. The only equipment involved would be power lines themselves, and certainly a person would need some knowledge of the construction and operation of power lines in order to distinguish them from telephone and cable television lines. Also, a person would need to be familiar with the construction and operation of power lines in order to make some determination of the voltage levels involved. According to the National Arborist Association (Ex. 30), "qualified line-clearance tree trimmers" are "familiar with the special techniques and hazards involved in line clearance." These workers are expected to maintain clearances from overhead lines based on the voltage of the lines, so they must be able to determine approximate voltage levels from the configuration of the lines. Therefore, OSHA believes that line-clearance tree trimmers have sufficient knowledge of the construction and operation of overhead power lines (though not to the same degree as an electric power lineman) and that these employees would be "qualified" under the definition contained in § 1910.399. Therefore, OSHA has not changed the definition of "qualified person" as suggested by this hearing participant.

With respect to companies that own and operate the types of installations listed in paragraph (c)(1) of § 1910.331 (for example, an electric utility), it is assumed that all employees whose work is on or is directly related to these installations are "qualified." OSHA has found it to be a very rare practice for an employer to allow an unqualified worker to perform work on one of these types of installations. However, it is common for an unqualified employee, such as a painter, to be engaged in unrelated work near an overhead electric power line. Because, by definition, an unqualified employee lacks sufficient training and experience, he or she faces a greater risk of electric shock while working near an electric power line than a qualified employee.

Whether an employee is considered to be a "qualified person" will depend upon various circumstances in the workplace. It is possible and, in fact, likely for an individual to be considered "qualified" with regard to certain equipment in the workplace, but "unqualified" as to other equipment. For example, an employee may have received the necessary training to be considered qualified to work on a particular piece of equipment. However, if that same employee were to work on other types of equipment for which he or she had not received the necessary training, he or she would be considered unqualified for that other equipment.

The foregoing discussion of how OSHA expects to apply the regulations to work performed by qualified persons was also given in the preamble to the proposal. Most of the commenters who questioned the definition of "qualified person" did not object to the explanation in the preamble. Two specifically supported this discussion and suggested incorporating some of its language into the text of the definition (Ex.4–9 and 4–13). (In response to these comments, OSHA has clarified the existing definition. This is discussed later in this section of the preamble, under § 1910.399.)

Work performed by other than qualified persons on, near, or with electrical installations is covered by the work practices contained in the standard, even if the electrical installations involved are not covered by the installation safety requirements of subpart S. This is because unqualified persons, by definition, do not have the training nor the skills necessary to perform work safely very close to electrical installations. Additionally, there are no standards, other than the 10–foot clearance rule for cranes and similar equipment, to cover these situations at present. Work performed by other than qualified persons near these "exempted" installations (e.g., near an electric transmission line) is covered by the new requirements. Thus, for example, a painter carrying a ladder near electric transmission or distribution lines would have to comply with the provisions of § 1910.333(c)(3)(i), but a qualified lineman working on the lines would not be covered.

The present installation safety requirements in subpart S do not cover "installations under the exclusive control of electric utilities * * * for the generation, control, transformation,

---

for generation, transformation, transmission and distribution of power used for rolling stock signaling and operation; in communication facilities; and for electric energy generation, control, transformation, transmission and distribution located outdoors or in building spaces used exclusively for such purposes.

transmission, and distribution of electric energy" (§ 1910.302(a)(2)(v)). This exclusion, which reflects the unique hazards and work practices involved in generation, transmission, and distribution of electric energy, mirrors the language contained in the scopes of the National Electrical Code and of NFPA 70E. The work practices in this standard are designed to complement the installation safety provisions in subpart S and are not intended to cover work practices for qualified persons who work on or near electric generation, transmission, or distribution installations. Therefore, paragraph (c)(1) of final § 1910.331 provides that qualified persons working on or near these installations are not covered by the new regulations. (As noted previously, OSHA has proposed a separate rule on electric power generation and related areas.) Additionally, because electric power generation, transmission, and distribution installations involve similar hazards and work practices whether or not they are controlled by electric utilities, OSHA has determined that the standard should not apply to qualified persons who work on or near any such installation, regardless of who owns or controls the installation.

A note is provided at the end of paragraph (c)(1) of § 1910.331 to emphasize that this exclusion is limited to qualified persons whose work is on or directly associated with these installations. The note states that, for other than excluded installations, where work is to be performed on or near exposed energized parts, even qualified persons must comply with the work practices contained in §§ 1910.331 through 1910.335. In these cases, the standard covers qualified persons who work near the energized parts as well as those qualified to work on the energized parts.

The extent to which the final standard should cover power generating stations was the subject of many of the comments and much of the testimony at the hearing. In general, the electric utilities want to be covered by one standard (at least as far as electrical requirements are concerned) and do not want to be covered by subpart S within the confines of an electric generating station (Tr. 1–110, 2–47 to 2–48, 2–155).

Edison Electric Institute (EEI) argued, in their posthearing brief, that OSHA has not shown the standard to be reasonably necessary to protect electric utility power generating station employees (Ex. 30). They supported this argument by pointing out that installations within an electric supply station for power generation posed the same hazards as installations supplying utilization equipment within the station (Ex. 30). Further, they claimed that they were unable to distinguish between the two types of installations within a generating station (Tr. 1–109, 2–88 to 2–100, Ex. 30). They also submitted evidence indicating that much of the supply wiring for the two systems was intermingled (Tr. 2–90, 2–92). In his testimony on this point, Mr. Malcolm Thaden, Jr., stated:

> Exhibit 2 [a part of Ex. 6–3] describes a 430 volt motor control center with 37 break positions that supplies electricity to equipment associated with the production of power in a 650 megawatt generating station. This is Chalk Point Unit 3, which was built in 1975.
>
> Examples of loads supplied from this motor control center include air heater drives, boiler drain sump pumps, igniter fans, boiler feed pump turbine, and auxiliary steam fans.
>
> Breakers in this motor control center also supply power to the service breaker panels. The lighting panel in the cable spreading room is shown in photograph 2–D, the service breaker that supplies loads that might be defined by OSHA under the proposed regulation as utilization equipment not used for generation, such as the control room lights, lavatories, office, service, and such.
>
> This exhibit demonstrates that the breaker supplying the service breaker is intermingled among all the other breakers in the motor control center, and that the power leads from the breaker share common raceways with power cables for many types of loads in the power plant. (Tr. 2–91 to 2–92)
>
> * * * * *
>
> Where the power goes and what equipment it ultimately drives is irrelevant to the risk which the employee faces when he works on these electrical systems. (Tr. 2–91)

In any plant or building (electric utility plants included), the circuits for various portions of the installation branch off the main supply of electricity, as limbs and branches fork off the main trunk of a tree. Each "fork" in the wiring is represented by a switchboard or panelboard containing the circuit breakers that supply feeders (limbs) and branch circuits (branches).

OSHA realizes that all circuits for utilization equipment installed in generating stations must originate in the same area as the circuits for the generating installation. However, at some point, circuits that are not an integral part of the generating installation must become independent of the generating circuits, except to the extent that they may share common cable trays or perhaps raceways. Otherwise, it would be impossible to control the lighting, for example, independently of the generator itself. With respect to the existing requirements of part I of subpart S, OSHA considers the "covered" installation to begin where it becomes electrically independent of conductors and equipment used for the generation of electric power. (Whether the circuit conductors share common raceways or cable trays is largely irrelevant from an electrical standpoint. Any direct connection between circuits is at a remote location, where the circuit protective devices and disconnecting means are located.) In most cases, it is a simple matter of tracing the wiring back from the utilization equipment itself until a point is reached where generation circuits are also supplied. Generally, branch circuits supplying utilization equipment (other than that used for the generation process) are covered; feeders supplying only "utilization" branch circuits are covered; feeders supplying "generation" circuits, alone or in combination with "utilization" circuits are not covered.

Exhibit 18 (recreated in Figure 1) clearly shows where each circuit in a utility plant is covered under existing subpart S. Each lighting circuit has its own breaker that is independent of (does not control) other loads in the generating station. If any of the other loads supplied by the panelboard or switchboard containing such a breaker is used in the generation of power, the panelboard or switchboard and its supply wiring are not covered. Nowhere, in this exhibit, does a branch circuit (i.e., the circuit conductors between the final overcurrent device protecting the circuit and the outlet for electric current) supply both "utilization" and "generation" loads. Branch circuits that supply "utilization" loads are not installations * * * for the generation * * * of electric energy" and are thus covered under the existing subpart S requirements and under the new regulations being promulgated here. Branch circuits that supply "generation" loads are "installations * * * for the generation * * * of electric energy" and are thus not covered under the two subpart S standards.

BILLING CODE 4510–26–M

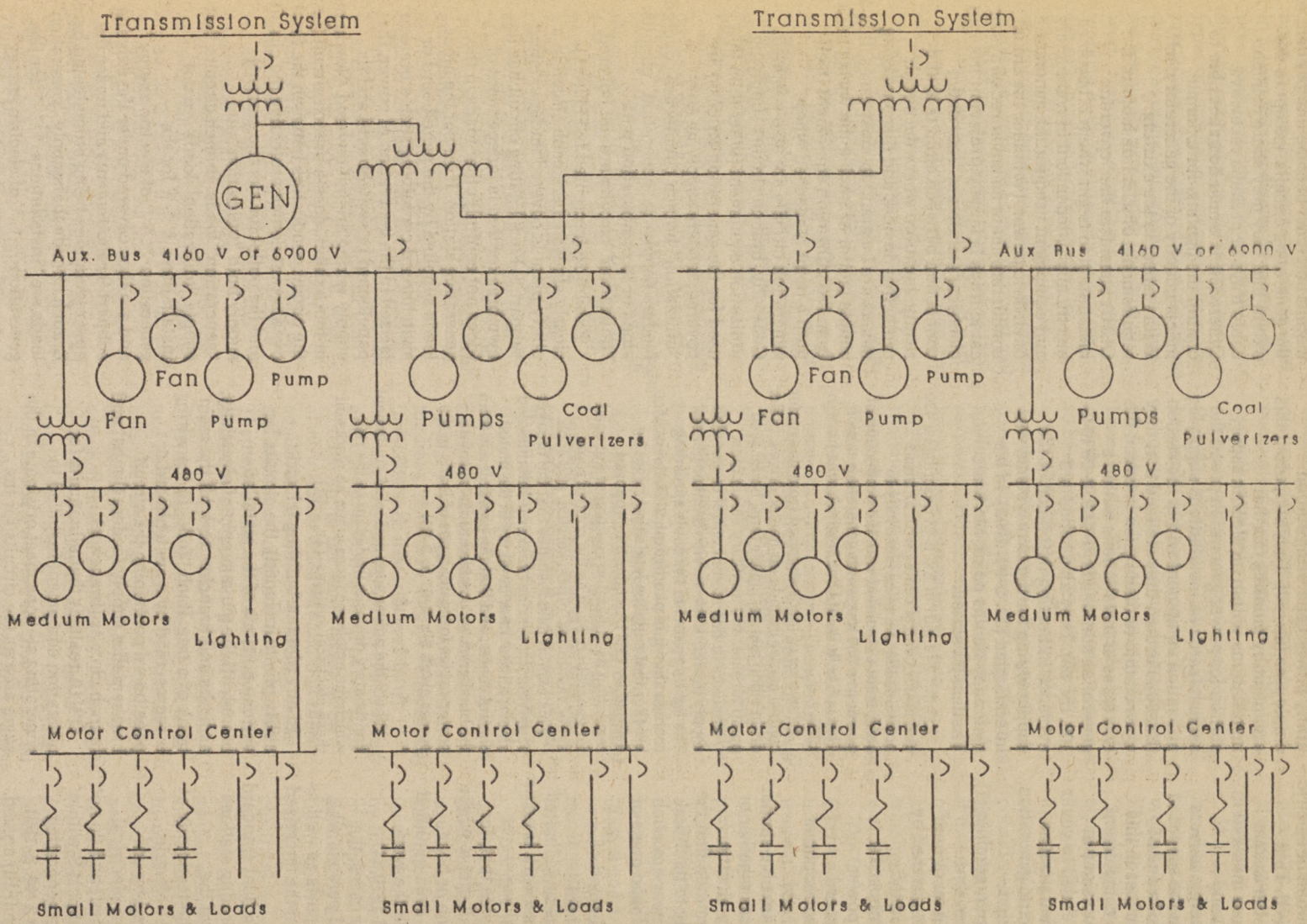

Figure 1 -- ONE-LINE DIAGRAM OF A COAL-FIRED GENERATING UNIT

Source: Electric Utility Systems and Practices, 4tn. Ed., Homer M. Rustebakke (G. E. Wiley, 1983). (Ex. 18)

BILLING CODE 4510—26—C

Feeders (i.e., all circuit conductors between the service equipment or other source of supply and the final branch-circuit overcurrent device) sometimes serve both types of loads. Those that do and those that supply only "generation" branch circuits are considered to be installations for the generation of power and are not covered. Feeders that supply only utilization branch circuits are covered because they are not used for power generation.

For example, the lighting installation is covered as follows: the lighting fixtures, branch circuit wiring, and overcurrent protection are covered; the panelboard and its supply wiring are covered if they supply no conductors or equipment used for generation; if the panelboard that supplies the lighting circuit also supplies generation loads, it is not covered.

Historically, the Agency has followed this reasoning in applying its electrical standards. Existing § 1910.302(a)(2)(v), which relates to the scope of the installation requirements currently contained in subpart S, reads as follows:

§ 1910.302 Electric utilization systems.

* * * * *

(a) *Scope.* * * *

(2) *Not covered.* * * *

(v) Installations under the exclusive control of electric utilities for the purpose of communication or metering; or for the generation, control, transformation, transmission, and distribution of electrical energy located in buildings used exclusively by utilities for such purposes or located outdoors on property owned or leased by the utility or on public highways, streets, roads, etc., or outdoors by established rights on private property.

The plain language of this regulation excludes, from the scope of existing subpart S, only "installations . . . for the generation, control, transformation, transmission, and distribution of electric energy." Installations for other purposes are covered by the existing requirements of subpart S.

EEI has interpreted this exclusion in a manner that is not consistent with its plain language. Because the wording was taken from NFPA 70E and the NEC, EEI presented several witnesses supporting an interpretation of the NEC language that would exclude electric utility power generating stations in their entirety. These witnesses pointed to a fine print note that was added to the NEC in the 1981 edition of the Code. The fine print note states that the NEC covers "installations in buildings used by the utility . . . such as office buildings, warehouses, garages, machine shops, and recreational buildings which are not an integral part of a generating plant, substation, or control center." For example, Mr. Wilfred Summers, who serves as a member of the NEC code-making panel responsible for the scope of the NFPA standard (CMP 1), stated:

> When I voted to include the fine print note in the 1984, 1981 and 1987 NEC's, I intended the note to make it clear that every electrical installation in an electric power generating plant owned and operated by the electric utility is not subject to the NEC. This was and remains so, regardless of whether a particular electric installation is considered to be used to generate electric power. (Tr. 2–68 to 2–69.)

Also testifying in regard to the scope of the NEC, Mr. Charles J. Hart, who represents the National Electrical Contractors Association and who is likewise a member of CMP 1, stated:

> When I proposed the fine print note and when I agreed to the version that was adopted, it was my intent and understanding that section 90–2(b)(5) and the fine print note taken together, it would be clear that the NEC, the National Electrical Code, does not apply to any electrical system or equipment in a power generation plant owned and operated by an electric utility. (Tr. 2–73 to 2–74.)

Mr. Melvin Borleis, a consultant for EEI and a third member of CMP 1, also supported this interpretation of the NEC.

OSHA does not dispute this interpretation of the scope of the 1987 NEC by these experts. However, OSHA does not and has never interpreted the language of existing § 1910.302(a)(2)(v) or its predecessor, former § 1910.308(c)(2)(v), in this manner.

Shortly after the OSH Act was adopted, OSHA promulgated three standards governing occupational exposure to electrical hazards in a variety of workplaces: 29 CFR part 1926, subpart V, governing occupational safety in the construction of electric transmission and distribution lines and equipment (37 FR 24880, November 23, 1972); 29 CFR part 1926, subpart K, governing electrical safety in construction (36 FR 7370 and 36 FR 25232, April 17, 1971, and December 30, 1971); and 29 CFR part 1910, subpart S, governing electrical safety in general industry (36 FR 10466 and 37 FR 3431, May 29, 1971, and February 16, 1972). The latter two standards incorporated the 1971 NEC by reference. Subpart S, at former § 1910.308(c)(2)(v), provided:

(c) *Scope.* * * *

(2) *Not covered.* The provisions of this subpart do not cover:

* * * * *

(v) Installations under the exclusive control of electric utilities for the purpose of communication, metering; or for the generation, control, transformation, transmission, and distribution of electric energy, located in buildings used exclusively by the utilities for such purposes or located outdoors on property owned or leased by the utilities or on public highways, streets, roads, etc., or outdoors by established rights on private property.

In 1981, OSHA revised 29 CFR part 1910, subpart S, its standard for electrical safety in general industry, in large part to incorporate relevant provisions of the NEC in the body of the standard rather than incorporating any specific year's edition of the NEC by reference. In proposing to do so, the Agency specifically requested comment on "whether the scope of the standard is clear with respect to its coverage of public utilities" (45 FR 10375). As proposed and as adopted, revised subpart S, in § 1910.302(a)(2)(v), codified the utility exclusion as it was stated in the 1971 NEC. In adopting this provision, OSHA made it clear, both through statements of its officials at the hearing (May 6, 1980, Transcript p. 25) and in the Preamble to the subpart S revision, that it considered the NEC exclusion to be limited to "installations either for the generation, control, transformation and distribution of electric energy or for the purpose of communication or metering" (46 FR 4038). Otherwise, the OSHA standards applied.

From the inception of subpart S, OSHA read its standards to be fully applicable to electric utility generating stations, with the sole exception that generation installations were not subject to the provisions incorporated from the NEC. This followed from the plain language contained in former § 1910.308(c)(2)(v). OSHA has utilized the same approach in enforcing the revision of subpart S published on January 16, 1981 (46 FR 4034).

OSHA began enforcing subpart S against utilities within months of its adoption. Computerized OSHA citation records begin in July 1972, and show that OSHA first cited a utility for violation of subpart S in August 1972 (Ex. 25). OSHA has continued to inspect and cite utilities for violations of its electrical safety standards in subpart S. Thus, OSHA records (Ex. 25) show a total of 2,762 inspections of utilities between July 1972 and June 1987. Of these, over 340 were inspections resulting in citations for violations of subpart S, including 13 fatality/catastrophe inspections involving 7 deaths and 16 hospitalized injuries (not including 1 fatality which was apparently caused by a nonelectrical hazard). Nor were there inspections limited to outlying buildings in utility facilities; OSHA has cited main plant buildings where appropriate (Ex. 25).

Where citations were contested, OSHA asserted its jurisdiction in

enforcement litigation before the Occupational Safety and Health Review Commission (for example, *Northern States Power Company*, 1975 Occup. Safety & Health Dec. (CCH) Para. 20,366—subpart S NEC citation of coal conveyor upheld [Ex. 25]). Additionally, in an April 1980 memorandum, OSHA's Director of Federal Compliance and State Programs confirmed to a regional official that (in the subpart S context) OSHA considered NEC requirements to be applicable to an electric utility's premises wiring for power and light (Ex. 25). It is clear, then, that OSHA has uniformly construed the NEC provisions to apply to a utility's utilization installations and has applied other subpart S standards to utilities throughout the Agency's existence.

OSHA faced the same argument from EEI over the scope of the electrical standards for construction, which are contained in 29 CFR part 1926, subpart K. Like former subpart S of the General Industry Standards, the original subpart K of the Construction Standards adopted the NEC by reference, including its scope. When subpart K was revised in 1986 (51 FR 25294, July 11, 1986), OSHA adopted a slightly revised scope for the electrical installation requirements contained in that subpart. The scope of these requirements, as they relate to installations in generating stations, is contained in § 1926.402(b), which reads as follows:

(b) *Not covered.* Sections 1926.402 through 1926.408 do not cover installations used for the generation, transmission, and distribution of electric energy, including related communication, metering, control, and transformation installations. (However, these regulations do cover portable and vehicle-mounted generators used to provide power for equipment used at the jobsite.) See subpart V of this part for the construction of power distribution and transmission lines.

EEI challenged the subpart K final rule in the United States Court of Appeals for the D.C. Circuit, in part over OSHA's adoption of this language. EEI argued before the court that the revised scope, for the first time, extended some provisions of the standard to electrical installations in utility power generation plants (Ex. 9). EEI contended that, prior to this revision, these generating plants were completely exempt from regulation under subpart K by virtue of the "utility exemption" contained in section 40–2(b)(5) of the 1971 NEC incorporated by reference in the former subpart K (Ex. 9). This is virtually the same argument that the utility industry is using in the present rulemaking effort.

However, in *Edison Electric Institute v. Occupational Safety and Health Administration*, 849 F.2d 611 (D.C. Cir. 1988), the Court of Appeals ruled against EEI, finding as follows:

In order to resolve this dispute, we must turn to the language of the 1971 NEC utility exclusion that was incorporated by reference in original subpart K. The relevant provision is Art. 90–2(b)(5) of the 1971 NEC, which provides that the following installations are not covered:

Installations under the exclusive control of electric utilities for the purpose of communication, metering or for the *generation*, transmission and distribution of electric energy located in buildings used exclusively by utilities for such purposes or located outdoors on property owned or leased by the utility or on public highways, streets, roads, etc., or outdoors by established rights on private property. (Emphasis added.)

Petitioner would have the court read this provision as if it said: "All installations under the exclusive control of electric utilities located in buildings used exclusively by such utilities for the generation of electric energy." But it is apparent that the provision is phrased in a different fashion. In fact, Art. 90–2(b)(5) purports to exclude only those "installations" that are "for the generation * * * of electric energy" *and* that are "located in buildings used exclusively by utilities for such purpose[]." The provision does not purport to exclude *all* installations that are located in buildings used for the generation of electricity.

We therefore find that the interpretation adopted by the agency is supported by the language of the regulation itself. In light of this conclusion, petitioner bears a heavy burden in seeking to persuade the court that the agency's interpretation is erroneous.[2] We find nothing in the record before us that is sufficient to meet that burden.

First, petitioner can point to no enforcement pattern that supports its claim that premises wiring was excluded under the original subpart K. To the contrary, the agency urges that it began enforcing subpart K against utilities within months of its adoption and has continued to do so on a regular basis. As evidence of these enforcement decisions, OSHA has attached as an appendix to its brief (1) a 1981 citation for a violation of a NEC provision that, according to OSHA was issued to a utility's main generating plant; [3] and (2) a memorandum dated April 1, 1980, from OSHA's Director of Federal Compliance and State Programs to a Regional Administrator that states that "the National Electric Code 1981 is applicable to power stations with regard to their premise's [sic] wiring for power and light."

* * * * *

Instead of producing evidence regarding the agency's enforcement history, EEI supports its interpretation of the NEC exclusion by pointing to the affidavits of two members of the committee that drafted the exclusion.[4] The opinions of these members were elicited during the subpart S rulemaking in response to OSHA's request for comments on whether "the scope of the standard is clear with respect to its coverage of public utilities." Notice of Informal Public Hearing, 45 FR 10375, 10376 (1980).[5] Two affidavits introduced by EEI, those of Mr. E.A. Brand and of Mr. H.P. Michener, support its interpretation of the NEC utility exclusion.[6] Other testimony, such as that of Mr. Richard Lloyd, a member of the 1971 Correlating Committee, is ambiguous at best.[7]

---

[2] EEI suggests that the deference usually accorded to an agency's interpretation of its own regulations, *see, e.g., United Steelworkers of American* v. *Marshall*, 647 F.2d 1189, 1228 (D.C. Cir. 1980), may be inappropriate when the regulation at issue is adopted from a national consensus standard, citing *Marshall* v. *Anaconda Co.*, 596 F.2d 370, 374 (9th Cir. 1979) and *Bethlehem Steel Corp.* v. *OSHRC*, 573 F.2d 157, 160 (3d Cir. 1978). We need not decide this issue because we find that the Secretary's interpretation is the most logical construction of the NEC utility exclusion. No deference is necessary except that due to the plain meaning of the regulation. In fact, as the agency notes, "it is Edison, not the Secretary, which attempts to read the plain language of the 1971 NEC exclusion to mean something other than what it actually says."

[3] The citation was issued for a violation of subpart S rather than subpart K. Nonetheless, since the 1971 NEC utility exclusion was incorporated into both standards, a citation issued under the one standard is probative of how the exclusion was interpreted under the other.

[4] The individual articles of the NEC are drafted by separate panels. A Correlating Committee oversees the work of these panels and is responsible for approving the complete text of the NEC. *See, e.g.*, 1971 NEC at 70v (NFPA), reprinted in J.A. at 58.

[5] At EEI's request, the entire rulemaking record of the subpart S revision was included in the record of the subpart K revision.

[6] Mr. Michener, the 1971 Chairman of Code Panel No. 1, which was responsible for drafting the utility exclusion, stated that:

The wording of [the utility exclusion] has been prepared by a special Technical Subcommittee for the 1968 edition. That subcommittee, however, has also proposed a note that read: "Nothing contained in part (b) of this section is to be construed to exempt any electrical wiring which is used for building lighting or general power purposes."

The panel did not accept this modifying note for the 1968 edition or in its review of the 1971 edition.

I, therefore, understand that the intent of the Code Committee was to exclude from the scope of the 1971 National Electrical Code all the conductors and equipment on the premises of an electric power generating plant under the exclusive control of an electric utility used exclusively by the utility for such purpose, whether or not the particular conductors or equipment were in the generation-transmission distribution network.

J.A. at 237,238.

The statements in Mr. Michener's affidavit were confirmed by Mr. Brand, who served as a member of the Correlating Committee for the 1971 Code and was also a member of Code Panel No. 1. J.A. at 235, 236; *see also* J.A. at 132–34 (Affidavit of E.A. Brand dated April 18, 1980.)

[7] Mr. Lloyd noted his "understanding" that the members of Code Panel 1 had "rather lengthy discussions" on the scope of the utility exclusion and stated that the panel's work was accepted by the Correlating Committee. *See* J.A. at 370–72; *see also* Testimony of Dr. Jerry L. Purswell, Director of OSHA's Safety Standards Programs, J.A. at 332, 343, noting that the NEC covers "the utilization systems or premises wiring found in buildings used by the electric utilities."

We do not find compelling evidence of the scope of the utility exclusion in the statements of two members of the drafting committee rendered almost ten years after the enactment of the 1971 NEC. Both the Supreme Court and this court have repeatedly emphasized that postenactment statements by legislators or indeed by legislatures are not entitled to great weight in interpreting the meaning of legislation. *See, e.g., CPSC* v. *GTE Sylvania, Inc.*, 447 U.S. 102, 117–18 (1980); *Democratic Congressional Campaign Committee* v. *FEC*, , 831 F.2d 1131, 1134 (D.C. Cir. 1987) (citing cases). A similar approach is appropriate when interpreting a national consensus standard. Petitioner has presented no contemporaneous interpretation of the 1971 code to support its unnatural construction of the utility exclusion. We therefore discern no evidence in the "legislative history" that would require us to overturn the agency's interpretation.

Petitioner also points to a "fine print note" or interpretation adopted during the 1981 revision of the NEC. The fine print note states:

It is the intent of this section that this Code covers all premises' wiring or wiring other than utility owned metering equipment, on the load side of the service point of the buildings, structures, or any other premises not owned or leased by the utility. Also, it is the intent that this Code cover installations in buildings used by the utility for purposes other than listed in (b)(5) above, such as office buildings, warehouses, garages, machine shops, recreational buildings which are not an integral part of a generating plant, substation, or control center. 1981 NEC Art. 90–2 (FPN) (NFPA), reprinted in J.A. at 184.

EEI argues that the second sentence of this fine print note, by listing affirmatively the utility facilities covered by the Code, underscores those that are not covered, and therefore supports EEI's position that all installations in buildings that are an "integral part of a generating plant" are not covered by the Code. This interpretation of the note gains some support from the rejection, by the most recent Code Panel I, of a proposal to delete from the note the words "which are not an integral part of a generating plant, substation or control center." The panel explained the decision to reject this amendment to the note on the following ground: "It is not the intent to cover office buildings, warehouses, etc., that are an integral part of a generating plant, substation, or control center." *See* 1986 NEC Technical Committee Report at 11, reprinted in Pet. App. at 9.

Assuming that we accept the interpretation of the note advanced by the petitioner, however, we do not find it to be dispositive on the meaning of the exclusion included in the original subpart K. The note was adopted by the drafters of the NEC fully nine years after OSHA incorporated the 1971 NEC into subpart K. The same factors that counsel against according substantial weight to the *post hoc* affidavits that EEI introduced into the subpart S rulemaking also militate against relying on this gloss added in a later draft of the code. We therefore find that the agency's position, that it has not altered the scope of the utility exclusion to include premises wiring for the first time, is reasonable.

The Court of Appeals has, therefore, upheld OSHA's interpretation of the electrical installation requirements of Subpart K and, by implication, subpart S. Installations within a generating plant that are not used for the generation of power (for example, lighting circuits, branch circuits supplying convenience outlets, and the heating, ventilation, and air-conditioning installations) are already covered by the existing provisions of subpart S. Conductors and equipment that are used in the generation of power (such as the generator itself, boiler feedwater pumps, and control circuits for the generator) are not covered. A distinction has been made (long before the start of this rulemaking effort) between the two types of installations within a generating station, with one being subject to OSHA electrical installation requirements and the other being exempt.

With the possibility of such a distinction in mind, EEI argued that there is nothing special about employee exposure to electrical installations not used as opposed to used for generation which justifies separate work practice standards (Ex. 30). In their post-hearing brief, EEI stated:

The conclusion is that there is literally no evidence in the record which supports the view that the hazards presented to utility workers when working in [sic] power plant electrical equipment not used for generation are so unusual or unique that they should be regulated any differently than all other electrical work in a power plant. (Ex. 30)

However, within an electric utility power plant, there is one distinction affecting employee safety that can be made between installations used for power generation and those not used for this purpose. This distinction is that installations not used for power generation are currently regulated under existing subpart S, whereas conductors and equipment used for power generation are regulated by no OSHA standards.

The conductors and equipment covered by subpart S can be expected to present a minimum level of safety, under normal operating conditions, that protects employees to the extent that only a few basic safety-related work practices are necessary (basically, those contained in final § 1910.334). Usually, live parts of electric circuits are not exposed to contact by employees (especially unqualified employees), so that employees can perform their jobs without consideration of touching an energized part. Also, metal frames of electric equipment are grounded if employees would likely be in contact with a grounded surface when touching the equipment. In this way, employees are protected from ground faults. To protect employees from fire and ground-fault hazards, conductors and equipment are provided with overcurrent protection. Thus, the installation safety requirements contained in subpart S protect employees to a great degree already (and this is the preferred method of protection given the inevitability of human error if work practices are used as the primary means of protection). The safe work practices to be used when work is performed on, near, or with electric circuits and equipment are dependent upon the design of the electrical installation and the standards it must meet.

On the other hand, installations used for power generation, which are not covered by the existing design requirements of subpart S, need follow no rigid rules. Equipment grounding, guarding of live parts, and overcurrent protection are not required for power generation equipment under OSHA standards, and the Agency has no assurance that these safety features have been provided. Even if electric utilities "generally" comply with the National Electrical Safety Code (ANSI C2), as asserted by EEI (Ex. 30), their generation installations do not necessarily provide these safety features. For example, ANSI C2–1984, section 124.A, requires the guarding of circuit parts operating at more than 150 volts to ground. Existing OSHA § 1910.303 requires guarding of circuit parts operating at 50 volts or more. In a generating station, electric utilities must currently follow the OSHA rule for conductors and equipment that are not used for generation, but not for the generation system conductors and equipment. Clearly, safe work practices for the two types of installations would vary, even with similar 120-volt motors, if one has live parts guarded and the other does not.

Edison Electric Institute also suggested that OSHA adopt (as part of a separate vertical standard) requirements contained in a joint EEI/IBEW draft standard on the maintenance of electric power generation, transmission, and distribution installations (Tr. 2–47 to 2–49; Ex. 30). Some of the requirements of this draft standard (Ex. 6) contained electrical requirements for generating facilities, which EEI claimed "reflects . . . what is regarded in the industry as enlightened minimum safe work practices." (Ex. 30) It is these

requirements, EEI states, that OSHA should apply to electric utilities in place of the work practices proposed for subpart S (Tr. 2–138).

OSHA used the EEI/IBEW draft standard as a base document in developing proposed § 1910.269 on electric power generation, transmission, and distribution. However, the paragraph on work practices on or near equipment energized at 100 to 2000 volts within generating plants (EEI/IBEW draft § 1910.269(v)(16), Ex. 6) was not carried forward into the OSHA proposal on generating plants. OSHA does not believe that the three enforceable work practices (dealing only with the use of protective equipment and test equipment) contained in the EEI/IBEW draft standard are an adequate substitute for the many safe work practices contained in this final rule, even for installations meeting existing subpart S requirements.[8]

Edison Electric Institute also argued that OSHA did not demonstrate significant risk to employees in the electric utility industry (Ex. 30). They claimed that the accident information (Ex. 8) and the citation data (Ex. 25) that OSHA submitted failed to relate to electrical hazards covered by the proposal (Ex. 3). However, both of these exhibits contain evidence of electrical injuries to employees in generating plants. In the printout of citation data (Ex. 25BB), wherever a fatality or serious injury is accompanied, in the report, by a related violation of OSHA's existing or former electrical standards in subpart S, the accident obviously involved "non-exempt" wiring.

In the ten-year period covered by the first printout in Ex. 25BB, electric utilities had 7 fatalities and 16 hospitalized injuries. (These accidents are due to faulty installations. Accidents involving "non-exempt" installations caused by unsafe work practices alone are not included in this data base.) This translates to 0.6 deaths per year associated with "non-exempt" installations in electric power generation plants.[9]

Exhibit 8 also contains information on electrical fatalities in the electric utility segment of general industry. The data in Table 2 include the following:

(a) 3 electrocutions of employees in SIC 4911 that would be covered under subpart S (existing and new standard).

(b) 2 electrocutions of employees of contractors working at generating stations.

These data cover the period of April 1984 to December 1986; and, as stated earlier, do not include all fatal accidents occurring during this time. Even so, from these data, OSHA can estimate the minimum number of relevant electrocutions occurring in the electric utility industry as being (3 electrocutions)/(2.75 years), or 1.1 deaths per year.

Thus, there are between 0.6 and 1.1 deaths per year in the electric utility industry that are addressed by OSHA's electrical standards in subpart S. The final Regulatory Impact Assessment (RIA) estimates that there are 108 relevant deaths per year in all of General Industry. The Preliminary Regulatory Impact Assessment (Ex. 2) lists total general industry employment as about 66 million. Exhibit 25Z gives employment in the electric utility industry as about 0.45 million, or about 0.7 percent of the general industry total. The number of relevant electrical fatalities per year is between 0.6 and 1.0 percent of the general industry total. Therefore, the risk of electrocution caused by a hazard covered by the final standard is about the same as or slightly higher in the electric utility industry in comparison to the risk faced by general industry employees as a whole.

Even in the absence of injury data, OSHA must consider whether the hazards to which employees working in electric utility plants are the same as those faced by employees working in other general industry workplaces. Assuming that installations in generating plants that are covered by existing subpart S actually meet those regulations, OSHA believes that the hazards faced by electric utility employees are identical to that faced by other general industry employees. (In fact, the work practices standard makes allowances for common types of non-compliance with the existing electrical standard.) There is nothing special about a lighting installation, for example, in a generating plant that would make the hazards here any different from those in other workplaces.

One of OSHA's expert witnesses, Mr. Jay Stewart, testified about the hazards of various electrical installations and their associated work practices. He said:

> Most employees will be provided protection from electrical hazards by the provisions of this standard for training, deenergizing, lockout and tagging, restricted distance from overhead lines and use of portable equipment.
>
> In some unusual work places, employees may have exposure to some unique hazards that require other provisions. However, OSHA should not exempt any industries from this standard for those reasons.
>
> * * *
>
> Where the hazards are the same among industries, the work practices and standards involved . . . should be basically the same.
>
> With respect to electrical safety, the hazards faced by an electrician working on a lighting or air conditioning system, for example, would be the same no matter what industry employs him or her.
>
> If the hazards are the same, then the work practices to be used by electricians working on lighting and air conditioning systems should be uniform among all industries.
>
> Separate standards would be warranted only if the system itself presented unique hazards. (Tr. 1–151 to 1–152)

OSHA agrees with Mr. Stewart and finds no evidence in the record that utilization equipment and its supply wiring pose unique hazards in the electric utility industry. Edison Electric Institute offered no evidence that utilization equipment and circuits in power generation facilities posed unique hazards, except where the circuits are commingled with power generation circuits. EEI did claim that electric utilities were unique because of their highly trained work force (Tr. 2–60) and the need to maintain reliable and continuous service to their customers (Tr. 2–102). However, the training received by an employee does not change the hazards posed by the equipment to which he or she is exposed; training is simply one means of controlling the hazards. Also, installations covered by the work practices standard are not (by definition) "an integral part of the generating installation" and thus cannot possibly affect the reliability of the generation system significantly. Therefore, OSHA has concluded that electric utility employees do face a significant risk of injury from hazards addressed by the final standard.

For the foregoing reasons, OSHA has not accepted EEI's arguments for excluding the electric utility industry, in general, and their electric generating stations, in particular, from the scope of the final electrical safety-related work practices standard. Employees in that industry face a significant risk of injury from hazards addressed by the final rule. OSHA has always interpreted the existing electrical installation requirements in subpart S as applying to

---

[8] During the comment period and at the hearing, EEI submitted a new paragraph on electrical safety-related work practices in generating plants for inclusion in final § 1910.269. The suggested requirements, which were more substantive than their earlier submission, were never submitted to the subpart S rulemaking record, so OSHA could not consider them in the promulgation of the subpart S standard. The merit and appropriateness of including them in § 1910.269, as well as any effect they might have on enforcement of subpart S in electric generating plants, will be carefully considered by the Agency when final § 1910.269 is developed.

[9] The fact that these are generating plants can be seen by checking the address from the associated field in the individual record.

utilization installations in electric utility power generating stations, and the hazards presented by these installations are different from those in a generating station that are not covered by existing subpart S. Therefore, OSHA has adopted a scope to the final standard that covers work on or near installations that are in power generating stations but that are not used for power generation.

The Agency has, however, added a second note to § 1910.331(c)(1) that gives examples of work on or directly associated with electric power generation, transmission, or distribution installations. One of the examples of work performed by a qualified person that would not be covered by the standard is work on electric utilization circuits in a generating plant provided that:

(A) Such circuits are commingled with installations of power generation equipment or circuits, and

(B) The generation equipment or circuits present greater electrical hazards than those posed by the utilization equipment or circuits (such as exposure to higher voltages or lack of overcurrent protection).

These examples are consistent with the statements concerning the interpretation of the scope of the standard made by OSHA at the hearing. (See, for example, Tr. 1–14, 1–19 to 1–23, 1–53 to 1–54, 1–56 to 1–58, and 1–60 to 1–62.)

Another interest group, tree-trimming contractors, also commented on the scope of the standard. The National Arborist Association (NAA) argued that line-clearance tree trimming (the trimming of trees to provide clearance from overhead power lines) should not be covered under the subpart S standard (Ex. 24). They noted that, in the preamble to the proposal (52 FR 45534) and at the public hearing (Tr. 1–19 to 1–23), OSHA's expressed intent was to exempt tree trimming performed near overhead lines by qualified people. However, NAA was concerned that the standard itself did not specifically exclude such work from coverage and that the regulation would be misinterpreted in the field (Ex. 24). The language proposed in § 1910.331(c)(1) exempting "work performed by qualified persons on or *directly associated* with" power transmission and distribution installations (emphasis added) particularly bothered the arborist. They felt that this wording exempted only work performed on behalf of the owner or operator of the overhead lines (Ex. 24).

It is OSHA's intent, as noted earlier, that the standard not apply to tree-trimming operations performed near overhead power lines as long as qualified employees are performing the work. (OSHA has proposed, instead, to cover line-clearance tree-trimming operations performed by line-clearance tree trimmers in the forthcoming electric power generation, transmission, and distribution standard mentioned previously.) The owner of the power lines and the company or individual for whom the work is being performed are not relevant factors. In order to clarify this in the final standard, the Agency has added a note to § 1910.331(c)(1) and a definition of "line-clearance tree trimming." The note reads, in part, as follows:

> **Note 2:** Work on or directly associated with generation, transmission, or distribution installations includes:
> * * * * *
> (2) Work directly associated with such installations, such as line-clearance tree trimming and replacing utility poles.

The definition reads as follows:

> *Line-clearance tree trimming.* The pruning, trimming, repairing, maintaining, removing, or clearing of trees or cutting of brush that is within 10 feet (305 cm) of electric supply lines and equipment.

OSHA believes that these additions in the final rule will clarify the standard and allay the National Arborist Association's stated concern. In practice, line-clearance tree-trimming contractors (who typically use qualified line-clearance tree trimmers to perform the work) will be covered under the electric power generation, transmission, and distribution standard (proposed § 1910.269, noted previously). Residential contractors (who use regular tree workers that are not considered "qualified persons" under subpart S) would normally be covered under the electrical safety-related work practice requirements of subpart S being promulgated here.

Under § 1910.331(c)(2), qualified persons engaged in telecommunications work are not covered by the standard to the extent that the work is covered by § 1910.268. That section applies to employers providing telecommunication service, including but not limited to communications utilities. Since the final rule would not apply to work covered by § 1910.268, there would be no overlap between the new regulations and the present telecommunications standard.

The installations listed in paragraphs (c)(3) and (c)(4) of final § 1910.331 are provided for consistency with the coverage of the installation safety requirements of subpart S, as set forth in existing § 1910.302(a)(2) (i) and (iii), respectively. For example, under § 1910.331(c)(3), automotive repair work involving electric conductors and equipment installed on self-propelled vehicles performed by qualified employees would not be covered by the final rule. As explained previously, whether an employee is considered to be qualified depends upon various circumstances in the workplace. For an automobile mechanic or other employee to be considered qualified (and thereby not covered under § 1910.331(c)(3)), he or she would have to understand the construction and operating characteristics of automotive electrical systems and would have to have a thorough knowledge of the hazards they present. It should be noted that the recently promulgated standard for the control of hazardous energy sources excludes "[e]xposure to electrical hazards from work on, near, or with conductors or equipment in electric utilization installations, which is covered by subpart S of this part" (§ 1910.147(a)(1)(ii)(C), 54 FR 36687). This exclusion applies only to work that is within the scope of the new electrical safety-related work practices standard. Work that is outside the scope of the electrical standard is covered by the generic lockout standard unless otherwise noted in § 1910.147.

B. § 1910.332

This section sets forth training requirements. Employees are required to be trained in the safety-related work practices of the standard, as well as any other practices necessary for safety from electrical hazards. Inasmuch as the application of the standard to work performed on or directly associated with exposed energized parts of certain installations (for example, power generation, transmission, and distribution installations) depends upon whether or not the work is performed by a qualified person, appropriate training is required for these individuals. Paragraph (b)(3) of final § 1910.332 explicitly states what OSHA intends as a basic training requirement for such qualified persons.

In order to be as flexible as possible, the OSHA final rule accepts both classroom and on-the-job training. The NFPA 70E standard is silent on the method by which training is to be provided.

The economic impact of the final standard is limited, and the expected benefits are optimized, because the training requirements apply primarily to employees in occupations that traditionally carry relatively high risk of injury due to electrical hazards. A review of the accidents indicates that the greatest impact on reduction of accidents would result from training

employees who work in jobs which expose them to electrical hazards to a greater degree than the average worker.[10] Upon searching the available accident data, OSHA has determined that employees in the occupations listed in Table 3 are more likely to face a higher than normal risk of electrical accidents. (The occupations listed in Table 3 are general categories taken from the specific occupational groups given in Table 7, in section IV of this preamble, which lists the electrical injury incidence rate for each group.) The occupational groupings listed include any qualified person who performs work covered by this proposed standard, as well as unqualified persons who also face a high risk. It is primarily these employees who would be subject to the training requirements. However, in some cases, employees in other occupational groupings may also face a relatively high risk of injury due to electric shock, and these employees would also require training. For example, a production employee may work in an area containing exposed live parts that are guarded only by location (such as overhead lines). If this worker could come in contact with these lines in the course of his or her work, then he or she would have to be trained. Training in the basic areas of hazard recognition, proper work practices, and knowledge of the working environment can reduce the frequency of accidents involving employees in these categories, whereas training employees who face a minimal exposure to electrical hazards would result in a negligible increase in benefits. Therefore, OSHA is requiring that training be provided only for employees who face the greatest risk of injury due to electric shock or other electrical hazards.

The training requirements contained in the proposal were addressed by many of the commenters and hearing participants. Three of the six hearing requests cited the training provisions as the basis of their objections. The hearing requests claimed that the proposal's training provisions were inadequate and would not provide sufficient protection from electrical hazards. The AFL–CIO (Exhibit 4–32) suggested that the requirements be expanded to cover the qualifications of the trainer, duration of the training, and demonstration of effectiveness of the training. The United Steelworkers of America (Exhibit 4–45) suggested that all workers be required to receive training and that the amount of required training be increased. The International Brotherhood of Teamsters (Exhibit 4–28) objected to OSHA's failure to provide a description, in objective terms, of what exposure to electrical hazards would trigger the training provisions. In response to these objections, OSHA listed the adequacy of these requirements as an issue to be addressed at the public hearing (53 FR 21695).

TABLE 3.—TYPICAL OCCUPATIONAL CATEGORIES OF EMPLOYEES FACING A HIGHER THAN NORMAL RISK OF ELECTRICAL ACCIDENTS

Occupation
Electricians.
Mechanics and repairers.
Electrical and electronic technicians.
Electrical and electronic equipment assemblers.
Stationary engineers.
Material handling equipment operators.
Electrical and electronic engineers.
Blue collar supervisors.
Welders.
Riggers and roustabouts.

No evidence was received with respect to the qualifications of the trainer or with respect to demonstration of the effectiveness of training. The AFL–CIO, which proposed expanding the requirements to address these criteria, did not provide language or guidance as to what should be required. OSHA believes that employers generally will blend any additional training imposed by the final rule into their existing programs or will use existing training programs offered by outside sources. Additionally, OSHA has no evidence that existing programs use unqualified trainers or have not been successful in reducing the number of accidents. In fact, Jay Stewart, one of OSHA's expert witnesses, stated:

> There are many aids available for training in the form of written materials, video tapes and lectures. The most sophisticated programs often include all of these. These are also available as complete programs. (Tr. 1–155)

Therefore, the final rule does not contain provisions addressing the qualifications of trainers or the demonstration of effectiveness of the training. OSHA believes that there is presently insufficient information in the record to support specific provisions in these areas. Once the standard has been in effect for some time, the Agency can evaluate whether the training programs being used are effective.

Many commenters and some of the hearing participants addressed the duration of training, especially with respect to the times given in OSHA's regulatory assessment of the impact of the proposal. The comments and evidence generally agreed that times listed in Table 4 in the preamble to the proposal were not adequate to fully train employees in electrical safety (Ex. 4–1, 4–8, 4–16, 4–29, 4–45, 15; Tr. 2–124). However, some of these commenters were using the times listed in the preamble as being requirements of the standard and as representing the total time taken to train an employee in his or her occupation (Ex. 4–1, 4–8, 4–29, 4–45). OSHA does not intend the times given in the regulatory analysis (Table 7) as the amount of training time required by the standard or as being representative of the total amount of time spent training an employee in his or her occupation. (An electrician, for example, takes years to learn the trade, and much of what is learned relates directly to electrical safety.) The times given in Table 7 in the preamble are simply OSHA's estimates of the average additional amount of training that would be required under the standard. However, on the basis of information in the rulemaking record, the Agency has adjusted the amount of training estimated to result from the final standard. (For further discussion of this issue, see section IV of this preamble.)

The final question relating to the proposed training requirements dealt with who should receive training under the standard. Some commenters and witnesses felt that all employees should receive instruction in electrical safety (Ex. 4–29, 4–32, 4–45; Tr. 2–13 to 2–15). For example, the United Steelworkers of America (USWA) stated:

> The USWA proposes that *all* workers be trained in electrical safety because *all* workers, during the course of performing their normal job duties daily, are exposed to routine electrical hazards. (Ex. 4–45)

Mr. James Sharp of the International Brotherhood of Electrical Workers (IBEW) supported this view, stating:

> Every employee should be trained on the . . . electrical hazards involved in his workplace, be it a five minute training session or a week training session, if needed. (Tr. 2–15)

In support of his position, Mr. Sharp cited NFPA 70E:

> 70E, again, was written to protect all employees, and in part II, as proposed in the rulemaking, only those who are exposed—and I don't know who is going to determine

[10] For a more thorough discussion of the relative risk of electrical accidents among various categories of employees and of how training reduces this risk, see chapter IV of OSHA's final Regulatory Impact and Regulatory Flexibility Analysis of the Electrical Safety-Related Work Practices Standard for General Industry. This document is available for inspection and copying in Docket S–016 in the Docket Office.

that magic number of where training is required and where it is not required in the document. (Tr. 2–14)

The provision in NFPA 70E to which Mr. Sharp was referring is contained in section 1.A and reads as follows:

A. *Safety Training.* Employees shall be trained in the safety related work practices, safety procedures, and other personnel safety requirements in this standard that pertain to their respective job assignments.

Employees shall not be permitted to work in an area where they are likely to encounter electrical hazards unless they have been trained to recognize and avoid the electrical hazards to which they will be exposed.

Note: For the purposes of this standard an electrical hazard is a recognizable dangerous electrical condition. Electrical conditions such as exposed energized parts and unguarded electric equipment which may become energized unexpectedly are examples of electrical hazards. (Ex. 25A)

The first paragraph of this requirement is nearly the same as final § 1910.332(b)(1), which reads as follows:

(b) *Content of training.* (1) *Practices addressed in this standard.* Employees shall be trained in and familiar with the safety-related work practices required by §§ 1910.331 through 1910.335 that pertain to their respective job assignments.

The only difference between the two provisions is that final § 1910.332(a) limits the application to employees who are not fully protected from electrical hazards by the requirements of existing §§ 1910.303 through 1910.308, whereas NFPA 70E does not limit the application of the requirement at all. However, the only employees not required to be trained under the final OSHA standard are those that are already sufficiently protected by the Agency's electrical installation standard. Additionally, NFPA limits the required training to provisions that pertain to an employee's job assignments. The employees not covered under the OSHA training requirements are those whose job assignments relate to none of the work practice requirements in the final rule. Therefore, under both the consensus standard and OSHA's final rule, all employees would be required to know (and use) the work practices that are contained in the standard and that are relevant to the employees' work.

The second paragraph of NFPA 70E section 1.A is a general paragraph that applies only to employees working in areas that contain electrical hazards. Mr. Sharp of the IBEW expressed the view that this required janitors and secretaries to be trained (Tr. 2–13 to 2–14). However, OSHA believes that few janitors and very few secretaries face electrical hazards as defined in the Note to NFPA 70E section 1.A. In fact, in the JACA report mentioned previously, clerical workers had one of the lowest electrical injury incidence rates of any occupation listed.[11] Additionally, Mr. Bernard W. Whittington, who was one of the OSHA expert witnesses and who is a past and current member of the NFPA 70E committee, argued that the proposed OSHA and NFPA 70E training requirement would achieve equal degrees of safety (Tr. 1–176 to 1–177). Under questioning by Mr. Sharp, he stated:

Mr. Sharp: Since you were involved in the development of the training provision of NFPA 70E and you're familiar with it, in your opinion how does the proposed rule better carry out your statement here of properly training the employee for the electrical hazards in his workplace?

Mr. Whittington: I can't say that it does it better, Mr. Sharp. I can say that it parallels and does it as well. It's just stated in a slightly different manner.

I come back to some of my original statements because endorsing performance oriented standards versus specification oriented standards and saying that OSHA has now with this type of standard allowed the flexibility of the employer and the employee in the workplace to draft their own required training requirements.

I view that as being a good thing.

Mr. Sharp: I agree that they have done this but wherein is the proposal more flexible than what we had in [70E].

Mr. Whittington: I don't say that it is. I say they achieved equal objectives. Just using a slightly different set of words. (Tr. 1–176 to 1–177)

OSHA's other expert witness at the hearing, Mr. Jay A. Stewart, also supported the proposed training requirements stating:

The training requirements will provide adequate protection from electrical hazards. (Tr. 1–152) He goes on to note that the vast majority of employees should not be exposed to electrical hazards and would not need any training. The employer provides protection for these employees by ensuring that the electrical installation meets the requirements contained in sections 1910.302 through 1910.308 of the existing general industry standards. (Tr. 1–154)

OSHA agrees with this argument. The Agency firmly believes that many employees, such as office workers, are fully protected by the electrical installation requirements contained in existing §§ 1910.302 through 1910.308. It is only when an employee performs job tasks which these existing requirements do not take into consideration that an employee faces a significant risk of injury from an electrical hazard. The injury data and accident descriptions corroborate this.

[11] Regulatory Assessment of the Impact of the Proposed Electrical Safety-Related Work Practices Standard", JACA Corp., pp. 4–8 to 4–9 (Ex. 1).

In fact, in the final rule, OSHA has altered the language of proposed § 1910.332(a) to stress this point in the regulation itself. Final § 1910.332(a) applies the training requirements "to employees who face a risk of electric shock that is not reduced to a safe level by the electrical installation requirements of §§ 1910.303 through 1910.308." The table of occupations to be trained has been retained, but is now referenced in a note to § 1910.332(a) rather than by the language of the scope itself. The new note to this paragraph reads as follows:

Note: Employees in occupations listed in Table S–4 face such a risk and are required to be trained. Other employees who also may reasonably be expected to face a comparable risk of injury due to electric shock or other electrical hazards must also be trained.

The basic intent of the scope provision, including the note, remains the same.

Table 4 lists the occupations identified in the accident descriptions contained in Exhibits 4–14 and 13, taken from the National Institute of Occupational Safety and Health (NIOSH) Fatal Accident Circumstances Epidemiology (FACE) reports. Nearly all of the listed occupations in Table 4 are also covered by Table S–4 in the final rule. The exceptions, such as restaurant workers, would still be covered because of exposure to electrical hazards despite not being explicitly mentioned in the regulations.

TABLE 4.—ELECTRICAL FATALITIES BY OCCUPATION

Job title	Number of fatalities
Laborer	28
Lineman	20
Electrician	16
Painter	13
Truck driver	7
Machine operator	6
Groundman	6
Maintenance man	5
Technician	5
Crew leader/foreman	4
Construction worker	4
Carpenter	3
Iron worker	3
Brick layer	3
Bill poster	3
Welders	2
Restaurant worker	2
Firemen	2

Source: NIOSH reports from their Fatal Accident Circumstances Epidemiology (FACE) Program (Ex. 4–14).

For example, the two restaurant workers mentioned in the NIOSH reports were both electrocuted immediately after wet mopping floors where electric equipment was present.

Employees assigned to mop work areas where the cleaning liquids may enter electric equipment designed for dry locations only face a risk of electric shock that is not reduced to a safe level by the existing Subpart S installation requirements. As the hazard of using electricity under wet conditions is widely recognized, OSHA expects that such employees would be trained as required by final § 1910.332.

On the other hand, the vast majority of all restaurant workers do not face such a high risk of injury from electric shock. Only one or two workers at any given location are usually assigned the task of mopping floors. Additionally, some portion of all restaurants are set up so that electric equipment is not exposed to splashing water during moping operations. Lastly, in one of the two accidents in the NIOSH report, violations of the installation requirements of existing Subpart S rather than improper work practices were the major causative factors.

Three commenters suggested adding occupations to the list proposed in Table S–4 (Ex. 4–12, 4–14, 4–33). E. I. du Pont de Nemours and Company cited painters and industrial machine operators as groups with sufficient exposure to electrical hazards to warrant training (Ex. 4–12). Painters were also mentioned in the comments of the Alliance of American Insurers as an occupational group with exposure to overhead power lines (Ex. 4–33). In Table 4, taken from the NIOSH FACE data (Ex. 4–14), painters and industrial machine operators were the groups with the fourth- and sixth-highest number of fatalities, respectively. Therefore, OSHA has added painters and industrial machine operators to the occupations listed Table S–4 of the final standard.

Another three commenters argued that employees in some of the occupations listed in proposed Table S–4 had very limited or no exposure to electrical hazards (Ex. 4–16, 4–23, 4–34). The Boeing Company cited electrical and electronic engineers as an example of an occupational group having few members exposed to injury from electric shock (Ex. 4–16). OSHA agrees with these comments and in response to them, has added a note to final Table S–4. This note exempts employees in certain listed occupations if they (or, for supervisors, the employees they supervise) do not come close to exposed parts of electric circuits operating at 50 volts or more to ground. Occupations to which the note does not apply (such as electricians) are expected to have an exposure to electrical hazards due to the nature of their work. This exemption should free employers from training employees who are not exposed to electrical hazards and should minimize the cost of the final standard without reducing benefits.

On the basis of information placed in the record, in the form of accident data and recommendations from industrial safety experts, OSHA has retained the training requirements contained in the proposal. Notes clarifying the intent of the standard, as described previously, have been added in the final rule, and two occupations have been added to Table S–4. OSHA believes that final § 1910.332 provides the greatest possible protection for employees without imposing unnecessary training costs on employers.

C. § 1910.333

The basic intent of § 1910.333 is to require employers to take one of three options to protect employees working on electric circuits and equipment: (1) Deenergize the equipment involved and lock out its disconnecting means (§ 1910.333(b)); or (2) deenergize the equipment and tag disconnecting means, if the employer can demonstrate that tagging is as safe as locking (§ 1910.333(b)); or (3) work the equipment energized if the employer can demonstrate that it is not feasible to deenergize it (see discussion of § 1910.333(a) for permissible applications of this option and § 1910.333(c) for precautions to be taken when work is performed on or near energized parts). These are the same options allowed under NFPA 70E.

Paragraph (a) of § 1910.333 sets forth general requirements on the selection and use of work practices. The requirements of this paragraph mainly address accidents which involve the hazards of exposure to live parts of electric equipment. A deenergized part is obviously safer than an energized one. Because the next best method of protecting an employee working on exposed parts of electric equipment (the use of personal protective equipment) would continue to expose that employee to a risk of injury from electric shock, § 1910.333(a) makes equipment deenergizing the primary method of protecting employees.

Under certain conditions, however, deenergizing need not be employed. Employees may be allowed to work on or near exposed energized parts, if the employer can demonstrate that deenergizing: (1) Would be infeasible or (2) would introduce additional or increased hazards, e.g., interruption of life-support equipment, shutdown of hazardous location ventilation systems, or complete removal of illumination. In any case, employees working on or near energized parts must use safe work practices as required by the standard.

Some of the commenters addressed the proposal's preference for deenergizing electric circuits when work is to be performed on them (Ex. 4–5, 4–10, 4–23). These commenters argued that it is as safe for qualified employees to work on energized parts as it is for them to work on deenergized parts. For example, the Aerojet Solid Propulsion Company stated: "We believe that it is equally safe to work systems energized or deenergized provided qualified persons are used and responsible supervision make a determination of the method to be used prior to proceeding with work." (Ex. 5) Supporting this view to a lesser extent, Mr. C. Richard Chapin, testified:

> [I]n the electric utility industry, while we deenergize to the extent practical, the need to maintain reliable and continuous service to the customer means that often electrical equipment and systems are worked energized, operating with well trained workers and proper procedures.
>
> Whatever the extent of application of this standard to utility power plants, utilities cannot operate with a regulatory preference for deenergization or with a requirement which places the burden of proof on the utility to show for each occurrence that deenergizing either introduces additional hazards or is virtually impossible. (Tr. 2–102 to 2–103)

The proposal's preference for deenergizing electric equipment is based on NFPA 70E and on accident data in the record. Section 1.B of NFPA 70E requires electric circuits to be deenergized unless it is not feasible to do so (Ex. 25A). More than ten percent of the fatalities listed in Table 2 were attributable to the employer's failure to deenergize and lockout electric circuits or equipment (Ex. 8). Of these 13 workers killed, 9 appeared to be qualified for the task being performed. Obviously, none of the fatalities was caused by a deenergized circuit (though some fatalities involved circuits that were thought to be deenergized). For this reason, OSHA has not accepted the argument that a qualified employee can work on energized circuits as safely as he or she can work on deenergized circuits. Therefore, OSHA is not leaving it to the employer's discretion as to whether or not to deenergize electric circuits on the basis of convenience, custom, or expediency.

On the other hand, the Agency realizes that there are times when it is necessary to work on or near exposed parts of electric circuits or equipment while the circuit or equipment remains energized. The proposal cited two

conditions under which the electric circuits and equipment could remain energized: (1) If the employer could demonstrate that deenergizing would create additional or increased hazards or (2) if the employer could demonstrate that deenergizing is infeasible due to equipment design or operational considerations.

Several comments addressed the circumstances under which work on energized parts would be permitted (Ex. 4–9, 4–12, 4–13, 4–17, 4–18, 4–21). Three of these comments specifically cited trouble shooting as an operation that had to be performed with circuits energized and requested that the standard specifically permit this (Ex. 4–9, 4–18, 4–21). Noting that examples of equipment not required to be deenergized due to the creation of additional hazards were given in a note in the proposed rule, the other three commenters suggested that the standard also include a note listing examples of equipment that would not be required to be deenergized because of infeasibility due to design or equipment limitations (Ex. 4–12, 4–13, 4–17). The Monsanto Company recommended the following note, which would permit most trouble shooting:

> An example of infeasibility due to equipment design or operational limitations is the making of required tests and adjustments which can only be made with the circuit or equipment energized. (Ex. 4–17)

Questioning the OSHA witnesses on behalf of the Edison Electric Institute (EEI), Mr. Stephen C. Yohay inquired as to the meaning of the word "infeasible" in proposed § 1910.333(a)(1). The Agency witness explained that, under the proposal, it would be considered to be "infeasible" to shut down a process in a chemical plant, an entire plant, or even a portion of a plant depending on the installation (Tr. 1–84).

On the basis of these comments and the questions posed by EEI, OSHA has determined that it is appropriate to list examples of situations in which "deenergizing ... is infeasible due to design or operational limitations." These examples are given, in the final standard, in a new Note 2 to § 1910.333(a)(1). (Proposed Note 2 has been renumbered as Note 3 in the final rule.) The language for the note has been taken, in part, from Monsanto's recommendation. The examples include testing (i.e., trouble shooting) that cannot be performed with the equipment deenergized, and work on circuits that form an integral part of a continuous industrial process in a chemical plant. The first example should satisfy the concerns of commenters who wanted the standard to permit trouble shooting and should permit necessary work that could not be performed under deenergized conditions. The second example was noted at the public hearing and is an example of a situation in which it is highly impractical to deenergize a circuit.

Paragraph (b) of § 1910.333 covers work on or near exposed deenergized electric parts and includes requirements for lockout and tagging of equipment disconnecting means. The need for adequate lockout and tagging procedures for electric equipment is widely recognized, as demonstrated by the ANSI and NFPA standards in this area. The accidents in the rulemaking record which involved work on electric equipment also indicate a need for proper work practices in this area. Although the lockout and tagging requirements of NFPA 70E are used as a basis, the OSHA standard clarifies and simplifies the requirements of the NFPA standard by directing the coverage to the prevention of employee contact with energized equipment or circuits. While the NFPA 70E requirements for lockout and tagging are highly detailed, the final regulations are general and more performance oriented in nature.

Additionally, the NFPA requirements were intended to apply any time work is performed on or near deenergized circuit parts or equipment in any situation which presents a danger that the circuit parts or equipment might become unexpectedly energized. Thus, the NFPA provisions not only address the hazard of contact with energized parts, but also cover other hazards which are presented by unexpected start-up of equipment during maintenance operations. This is expressed in NFPA 70E, part II, section 1.B, second paragraph, which states:

> Where the work to be performed requires employees to work on or near exposed circuit parts or equipment, and there is danger of injury due to electric shock, *unexpected movement of equipment, or other electrical hazards*, the circuit parts and equipment that endanger the employees shall be deenergized and locked out or tagged out in accordance with the policies and procedures specified in Paragraph B(1) and chapter 4 through subparagraph B(7)(b). [Emphasis added.] (Ex. 25A)

In contrast to this, the OSHA Subpart S standard is intended to cover employee exposure to electrical hazards which might occur from the unexpected energizing of circuit parts and does not cover other equipment-related hazards which do not involve exposed live parts. Thus, the subpart S standard will protect an electrician working on a circuit but does not address a mechanic working on the mechanical parts of an electrically powered machine. (The recently issued generic lockout standard, § 1910.147, covers the hazards of unexpected activation or energization of machinery or equipment during servicing or maintenance activities. See final rule at 54 FR 36644, September 1, 1989.)

One of the hearing requests (Ex. 4–29) specifically suggested that the lockout and tagging provisions be expanded to require the release of stored mechanical energy before circuits or equipment are deenergized. The unanticipated release of this stored mechanical energy could, in fact, injure employees. OSHA recognizes that equipment maintenance and repair present significant hazards to employees. As noted earlier, these hazards, which are different from those addressed by the electrical work-practices standard, are covered by OSHA's standard on the control of hazardous energy sources (lockout/tagout). OSHA has written these two standards so that they complement one another.

Two commenters specifically addressed the issue of compatibility of the lockout and tagging provisions in the two OSHA standards. The Motor Vehicle Manufacturers Association (Ex. 4–48) suggested that the lockout and tagging requirements in the electrical safety-related work practices standard be removed and that OSHA apply the generic standard (§ 1910.147) to electrical lockout. The National Electrical Manufacturers (Ex. 4–8) expressed the view that the two standards be compatible. They specifically cited areas that were not addressed in the electrical lockout and tagging proposal but that are covered under NFPA 70E and in the generic lockout standard, such as provisions for removal of locks and tags by the person who applied them and written procedures. The National Fire Protection Association also cited OSHA's lockout and tagging provisions in the proposed electrical standard as one area where the OSHA proposal was not as effective as NFPA 70E in protecting employees, because the OSHA proposal depended upon the generic lockout standard to provide protection from non-electrical hazards (Ex. 29). They stated that this "bifurcated approach to lockout/tagout regulation is a dangerous one." (Ex. 29)

In response to these comments, OSHA again reviewed the electrical lockout and tagging requirements of the proposed electrical work practices standard for consistency with the generic lockout standard and for effectiveness equivalent to NFPA 70E. The Agency has determined that the

omission from the proposal of a requirement addressing responsibility for removal of locks and tags would render OSHA's standard less effective than NFPA 70E. Therefore, a requirement equivalent to NFPA 70E section 4.B(6)(c), Lockout-Tagout Device Removal, has been incorporated into the final rule. This provision, which has been codified as § 1910.333(b)(2)(v)(C), reads as follows:

> Each lock and tag shall be removed by the employee who applied it or under his or her direct supervision. However, if this employee is absent from the workplace, then the lock or tag may be removed by a qualified person designated to perform this task provided that:
> (1) The employer ensures that the employee who applied the lock or tag is not available at the workplace, and
> (2) The employer ensures that the employee is aware that the lock or tag has been removed before he or she resumes work at that workplace.

This requirement ensures that locks and tags are removed with the full knowledge of the employee who applied them. Without such a requirement, it is likely that a lock or a tag could be removed by persons who are not responsible for the lockout, endangering employees working on the "deenergized parts." This provision also allows for removal of locks and tags if the employee who applied them is absent from the workplace, under conditions like those in the exception to § 1910.147(e)(3).

Additionally, the generic lockout standard and NFPA 70E's lockout provisions contain requirements for lockout procedures to be in writing. In the preamble to the final generic lockout standard, OSHA strongly defended that standard's requirement for written procedures (54 FR 36670). The Agency believes that written procedures are an important part of a successful lockout and tagging program and that they should, therefore, be required. However, the final electrical standard's lockout provisions are themselves a step-by-step procedure for safely deenergizing electrical circuits. For this reason, the final electrical work practices standard incorporates a requirement (§ 1910.333(b)(2)(i)) for employers to maintain a copy of the lockout procedures outlined in § 1910.333(b)(2) and to make it available for inspection by employees and by OSHA. The procedures can be in the form of a copy of the regulation itself or can be the employer's documentation of his or her lockout program. In fact, if the employer's written procedures compiled under § 1910.147(c)(4) contain all the procedures required by paragraph (b)(2) of final § 1910.333, the employer's documentation of his or her generic lockout program could also be used to fulfill the obligation imposed by § 1910.333(b)(2)(i) of the electrical work practices standard.

In comparing proposed § 1910.333(b)(2) with final § 1910.147, OSHA determined that the new generic lockout standard encompassed all the lockout and tagging requirements contained in the electrical work practices proposal with two exceptions. First, the proposed electrical standard more tightly restricted the use of tags without locks (see the discussion of final § 1910.333 (b)(2)(iii)(C) and (b)(2)(iii)(D), below) and called for additional protection when tags were permitted. Secondly, the electrical work practices proposal contained specific requirements for testing circuit parts for voltage before they could be considered as deenergized (see discussion of final § 1910.333(b)(2)(iv)(B), below). OSHA believes that a lockout and tagging program which meets § 1910.147 will, with these two exceptions, provide protection for servicing and maintenance involving electrical work and live parts. Accordingly, the final rule on electrical safety-related work practices incorporates this finding. OSHA has decided to accept (by means of a note added to final § 1910.333(b)(2)) any lockout and tagging program that conforms to § 1910.147 if it also meets paragraphs (b)(2)(iii)(D) and (b)(2)(iv)(B) of final § 1910.333. This will enable employers to use a single lockout and tagout program to cover all hazards addressed by these two standards, as long as that program includes procedures that meet the two additional paragraphs when exposure to electric shock is involved.

OSHA believes that these changes make the final electrical lockout and tagging provisions equivalent to those in NFPA 70E and compatible with § 1910.147.

The application of the final standard's lockout and tagging requirements is set forth in § 1910.333(b)(2), reading, in part, as follows:

> (2) *Lockout and tagging.* While any employee is exposed to contact with parts of fixed electric equipment or circuits which have been deenergized, the circuits energizing the parts shall be locked out or tagged or both in accordance with the requirements of this paragraph.

OSHA has drafted its electrical lockout and tagging provisions to be more performance oriented than are the corresponding provisions of NFPA 70E. Within the range of hazards covered by the final standard, OSHA believes that the final lockout and tagging provisions will provide employees with electrical safety which is equivalent to that which would be afforded by NFPA 70E, part II.

OSHA has limited the application of the lockout and tagging provisions to fixed equipment. (It is not clear whether the NFPA standard would apply to other than fixed equipment.) Employees can safely work on cord- and plug-connected, portable and stationary equipment which is disconnected from the circuit. Generally, such equipment is returned to a maintenance shop for repair, and the danger of accidental energizing of equipment parts is eliminated in most cases.

Paragraph (b)(2)(i) of final § 1910.333 requires an employer to maintain a copy of the procedures outlined in § 1910.333(b)(2) and to make it available to employees and to OSHA. The explanation and rationale for this paragraph was presented earlier in this section of the preamble.

Paragraph (b)(2)(ii) addresses the deenergizing of equipment within the lockout and tagging process. After a procedure is set for safe deenergizing, the circuits and equipment on which work is to be performed are then required to be disconnected from all energy sources. This ensures that the circuits are completely disabled. Because they do not completely deenergize entire circuits, control devices are not permitted to be used as the only disconnecting means. Lastly, capacitive elements in the circuit are required to be relieved of their stored energy and are required to be short-circuited and grounded if necessary. These requirements will protect employees from the release of electrical energy during their work on the circuits or equipment.

Some commenters expressed the concern that stored non-electrical energy could also pose electrical hazards (Exs. 4–8, 4–29, 4–32). Mr. Jay Stewart, one of OSHA's expert witnesses, testified in support of these comments as follows:

> One commenter suggested that in deenergizing electrical equipment procedures be required to deactivate or release mechanical or pneumatic energy that may be involved in the mechanism of the electrical equipment. Some contactors and circuit breakers have very large operating springs or pneumatic or even hydraulic operating mechanisms.
>
> OSHA should consider as a part of the deenergizing requirement a new paragraph (D) in paragraph (b)(2)(i) of § 1910.333 to state:
>
> "(D) Stored mechanical energy such as in a spring or stored pneumatic or hydraulic energy that is present in electrical equipment

and that might endanger personnel shall be released." (Tr. 1–159)

OSHA has accepted Mr. Stewart's recommendation and has included a new § 1910.333(b)(2)(ii)(D). This paragraph requires the blocking or relieving of stored non-electrical energy that could energize an electric circuit.

Paragraph (b)(2)(iii) sets forth requirements on the application of locks and tags to circuit disconnecting means. To prevent the unauthorized reenergizing of a circuit on which work is being performed, the final standard, in general, requires a lock and a tag to be placed on each disconnecting means that could supply power to the circuit. The final rule also requires the tags used to contain a statement prohibiting unauthorized operation of the disconnecting means and prohibiting removal of the tag. This requirement will ensure that employees are informed of the purpose of the lock and tag.

To permit maximum flexibility, the requirements permit the use of locks alone or tags alone under certain conditions. Tags are permitted to be used without locks if locks cannot be applied to a given installation or if the employer demonstrates that tagging procedures will provide safety equivalent to that of a lock. However, because a person could operate the disconnecting means before reading or recognizing the tag, the standard also requires that, where tags only are used, one or more additional safety measures be taken to provide added safety. The additional measures used must either: (1) Ensure that the closing of the tagged single switch would not reenergize the circuit on which employees are working or (2) virtually prevent the accidental closing of the disconnecting means. The following examples from the record illustrate protective techniques that are commonly used to supplement tags and protect workers:

(1) The removal of a fuse or fuses for a circuit (Tr. 2–104).

(2) The retraction of a draw-out circuit breaker from a switchboard (i.e., racking out the breaker; Ex. 6).

(3) The placement of a blocking mechanism over the operating handle of a disconnecting means so that the handle is blocked from being placed in the closed position (proposed § 1910.333(b)(2)(ii)(C)(2)).

(4) The opening of a switch (other than the disconnecting means) which also opens the circuit between the source of power and the exposed parts on which work is to be performed (proposed § 1910.333(b)(2)(ii)(C)(2)).

(5) The opening of a switch for a control circuit that operates a disconnect that is itself open and disconnected from the control circuit or is otherwise disabled (Tr. 2–170).

(6) Grounding the circuit upon which work is to be performed (Tr. 2–167).

The additional safety measure is necessary because, at least for electrical disconnecting means, tagging alone is significantly less safe than locking out. A disconnecting means could be closed by an employee who has failed to recognize the purpose of the tag. The disconnect could also be closed accidentally.

Public comment was requested on whether the additional safety measure is necessary when a disconnecting means is tagged and on what measures could be taken to protect employees from the accidental closing of a tagged switch. OSHA also requested public comment on situations in which tagging procedures may provide safety equivalent to that provided by locks.

A few commenters supported the use of tags alone, without an additional measure taken to protect employees (Ex. 4–17, 4–18, 6; Tr. 2–103 to 2–106). For example, Mr. Richard Chapin, representing the Edison Electric Institute, stated:

> The standard would require that where the circuit is open and tagged, the employee would, in addition, have to open the panel box and either lift wires or remove the breaker from its position, to establish a second break. This would create the additional hazard of exposing employees to energized equipment which would far exceed the risk if a properly trained electric utility power plant employee might disregard a tag and flip a switch which had been tagged out." (Tr. 2–104) He further stated: ". . . the tagging system in use in the electric utility industry provides protection to workers which is equivalent to locks in other industries. (Tr. 2–103)

However, as documented in two of the computer printouts in Exhibit 8, the electric utility industry had 14 fatalities and 17 injuries recorded in OSHA files that were directly caused by a failure of the lockout/tagout procedure in use.[12] (These accidents occurred during the period of July 1, 1972, to June 30, 1988, but do not represent all accidents during this period. Most injuries in all States and most fatalities in States with approved OSHA plans are not included.)

Although many of these accidents occurred while work was being performed on installations not covered by the standard (in fact, in most cases the type of installation was not listed), the number of fatalities and injuries does indicate that there is a risk of serious injury under the electric utility industry's current tagging system. Their tagging system does not differentiate between electric power generation, transmission, or distribution installations and electric utilization installations (Ex. 30; Tr. 2–84 to 2–100, 2–105 to 2–106, 2–137), and it is relatively uniform across the entire electric utility industry (Ex. 10; across the entire electric utility industry (Ex. 10; Tr. 2–144 to 2–146, 2–160 to 2–162).

In light of this evidence, OSHA believes that some form of protection in addition to the simple opening of a disconnect and the placement of a tag on the disconnect is necessary and appropriate even for electric utilities, which claim to have an industry-wide tagging system that provides safety equivalent to a lock. On the other hand, the Agency recognizes the safety record of many individual electric utility companies, as well as companies in other industries, who have never had a lockout- or tagging-related injury in decades through the use of a successful tagging system, which provides supplemental protection in addition to that provided by a simple tag. Therefore, OSHA is retaining the requirement for a measure of protection in addition to the use of tags alone, but is clarifying the language of § 1910.333(b)(2)(iii)(D) to read as follows:

> A tag used without a lock, as permitted by paragraph (b)(2)(iii)(C) of this section, shall be supplemented by one or more additional safety measures that provide a level of safety equivalent to that obtained by the use of a lock. Examples of additional safety measures include the removal of an isolating circuit element, blocking of a controlling switch, or opening of an extra disconnecting device.

In the final rule, OSHA is not strictly requiring the opening of an additional disconnect or the removal of a circuit element if tags are used as an equivalent to locks. Any measure or combination of measures that will protect employees as well as the application of a lock can be used to supplement the tagging of disconnecting means. In determining whether an individual employer's "tagging-only" program provides safety

[12] The number of fatalities and injuries were determined by adding the injury data for every accident that was coded with "lockout/tagout proced[ure] malfunc[tion]" as the corresponding human factor associated with the accident. Due to the presence of this code, this analysis could include accidents for which there was no description, or abstract, of how it occurred. (The accident descriptions were generally not available before April 1984.) For incidents with associated abstracts, the total was adjusted to account for cases in which a utility tagging procedure malfunction was noted in the accident description, but the accident was not correspondingly coded. Because this could not be done for injuries and fatalities that occurred before April 1984, it is likely that the totals associated with lockout/tagout procedure malfunctions are understated.

equivalent to a lock, the Agency will consider factors such as:

(1) The safety record under the employer's tagging program,

(2) Whether the tagged disconnecting means are accessible to qualified persons only,

(3) Whether the tag and its attachment mechanism clearly identify the disconnecting means that is open and effectively inhibit reenergizing the electric circuit (for example, when a tag is used on an energy isolating device that is capable being locked out, the tag must be attached at the same location that the lock would have been attached), and

(4) Whether employees are thoroughly familiar with tagging procedures, especially their duties and responsibilities with respect to the procedures and the meaning and significance of the tags used with the procedures.

One commenter noted that proposed paragraphs (b)(2)(ii)(C) (*1*) and (*3*) are basic requirements that should apply regardless of whether the employer uses tags alone or in conjunction with locks (Ex. 4–8). The first paragraph proposed a requirement for tags to prohibit removal and unauthorized operation, while the second covered training of employees in the employer's tagging system. These requirements are already addressed in final §§ 1910.333(b)(2)(iii)(B), on tags, and 1910.332(b)(1), on training. Therefore, OSHA has not included paragraphs (b)(2)(ii)(C) (*1*) and (*3*) of proposed § 1910.333 in the final standard and has incorporated remaining proposed subparagraph (C)(*2*) into final § 1910.333(b)(2)(iii)(D).

When the work to be performed involves only a simple circuit and can be completed in a short time, a lock can be used safely without a tag. The final rule limits the use of this procedure to any situation that involves one circuit or a single piece of equipment and that involves a lockout period of no more than one work shift. Additionally, affected employees would be required to be trained in and familiar with this procedure to avoid any possible confusion over the purpose of the lock on the disconnecting means.

Final § 1910.333(b)(2)(iv) contains requirements for verifying that the correct circuits have, in fact, been deenergized. The requirement for determining whether a circuit has been opened can be satisfied by operating the controls for the equipment supplied by the circuit. This method has the advantage of not exposing employees to possibly energized parts. Therefore, the standard makes this the first step in verifying the condition of the circuit.

Of course, operating the equipment controls is not a completely reliable indication that the circuit has been deenergized. It is possible to interrupt a portion of the circuit so that the equipment will not operate even though the rest of the circuit is still alive. Therefore, the standard requires a qualified person to use test equipment to ensure that all parts of the circuit to which employees will be exposed are deenergized. Because it is also possible, under certain conditions, to feed circuits from the "load" side, the test is required to check for any voltage backfeed which might be present.

Voltages over 600 volts are more likely than lower voltages to cause test equipment itself to fail, leading to false indications of no-voltage conditions. To prevent accidents resulting from such failure of test equipment, the final standard requires checking operation of the test equipment immediately before and after use, if voltages over 600 volts are involved.

Once work has been completed, it will be necessary to reenergize the circuit. Paragraph (b)(2)(v) of final § 1910.333 addresses the procedure to be used for this task. The first step that must be taken is an inspection or test (or both) of the circuits and work areas to ensure that all tools, jumpers, grounds, and other devices have been removed. Otherwise, energizing the circuits involved could result in a short-circuit condition that injures employees. The standard requires such inspection and tests, if necessary, to be performed by a qualified person.

To protect employees from contact with reenergized circuit parts, the final rule requires affected employees (those who are exposed to the hazards of reenergizing the electric circuits) to be warned to stay clear. The locks and tags must then be removed by the employees who placed them under paragraph (b)(2)(v)(C) (discussed previously in this section of the preamble.) After all locks and tags are removed, a visual determination that employees are clear of danger is required. Once these procedures have been followed, it is safe to reenergize the circuits.

Paragraph (c) of final § 1910.333 applies to work on or near exposed energized parts. This paragraph contains requirements intended to prevent accidents due to the presence of exposed live parts. Requirements are given pertaining to work near overhead lines, illumination, confined work areas, conductive materials and equipment, portable ladders, conductive apparel, and housekeeping duties.

Paragraph (c)(2) of final § 1910.333 requires employees working on electric circuit parts or on electric equipment that has not been deenergized under the procedures set forth in final § 1910.333(b) to be qualified persons. These employees must be capable of working safely on energized circuits and must be familiar with the protective work method and tools that are necessary for this type of work. This provision will prevent injuries to unqualified employees, who are not capable of working safely on energized electric circuits.

Since overhead lines are a major source of occupational electrocutions (47 of 128 electrocutions in general industry as reflected by the OSHA fatality/catastrophic abstracts), regulations dealing with work near such lines are stressed. A number of these accidents involve employees engaged in non-electrical activities which place them near electric power conductors installed above ground (e.g., a painter moving a ladder). The requirements of final § 1910.333(c)(3) have expanded those found in the NFPA 70E section on overhead lines and are more stringent. According to § 1910.333(c)(3)(i), other than qualified persons would be required to maintain a 10-foot (305-cm) minimum clearance from unguarded energized overhead lines. This clearance distance is based on the 10-foot (305-cm) clearance rules presently contained in §§ 1910.67(b)(4), 1910.180(j), 1910.266(c)(6)(xxii), 1926.550(a)(15), and 1926.600(a)(6), which apply to the use of various mechanical equipment near electric power lines.

OSHA realizes that it is sometimes necessary for work to be performed closer to the lines than 10 feet (305 cm) when it is infeasible or impossible to deenergize them. However, since unqualified persons are not fully aware of the danger involved, such work may be performed only by qualified personnel. Therefore, for qualified persons, the final standard allows smaller clearances, as given in Table S–5. These clearances are the same as those given in Table R–2 of § 1910.268, "Telecommunications." The smaller clearances allow qualified persons to perform tasks which require close approach to overhead lines. At the same time, the smaller clearances provide protection from arc-over with a sufficient safety factor for employees who are familiar with the construction and operation of overhead electric power lines and with the hazards involved. Additionally, if the work requires closer approach than even these smaller clearances allow, qualified persons would be permitted to approach

the lines as close as necessary if insulation or guarding is provided.

Without differentiating between qualified and unqualified workers, the NFPA standard requires a "safe distance" to be maintained for any employee working in elevated positions near unguarded, energized lines but does not specify what this distance is. For employees on the ground, the consensus standard requires deenergizing or guarding any overhead line that might be contacted.

The Edison Electric Institute (which represents electric utilities) was very concerned about OSHA's approach to the hazards of overhead lines for "qualified" employees. In their comments, they stated:

> Proposed § 1910.333(c)(3)(ii) pertaining to work by "qualified" persons in the vicinity of overhead lines, genuinely frightens EEI and its members, because we believe that OSHA has no appreciation of the risks the standard would create. By definition [through language contained in the scope of the standard], such persons will not be doing work on or directly associated with those lines. Therefore, these are likely to be employees of contractors having no relationship with an electric utility. Rather, they will simply be workers whose work happens to take them in proximity to overhead utility lines. An example might be a carpenter contractor whose employees are working on a scaffold near overhead lines, or a tree trimmer working for a private homeowner trimming trees near a live power line.
>
> Among the precautions which would license such employees to approach within two feet of a 7.2kV line, for example, would be insulating the energized line, i.e., by applying a rubber line hose or blanket. Section 1910.333(c)(ii)(B) [sic]. There is no suggestion, however, that such equipment would be applied to the utility's lines by utility employees; rather, it appears that the so-called "qualified" carpenter or tree trimmer would be the one actually working on high voltage lines to apply this equipment.
>
> This is nothing short of an OSHA invitation to kill workers who have nothing approaching the skill and experience needed to come as close to, and work on, energized overhead conductors as utility linemen. Moreover, allowing such workers to rely on devices such as rubber line hose to protect themselves from high voltage lines is well understood by utilities to invite those employees to have a false, and deadly, sense of security about their safety. Simply stated, whether OSHA misguidedly believes them to be "qualified" or not, persons other than trained and experienced utility linemen should be prohibited from installing protective equipment on utility lines and equipment. All others, except those who have a recognized need to work closer than ten (10) feet to energized lines, such as line clearance tree trimmers and communications workers, must be required to keep ten (10) feet from energized power lines, period. (Ex. 4–10)

EEI further stated, through one of its witnesses at the hearing, Mr. C. Richard Chapin:

> . . . it would be contrary to public safety and would create unacceptable risks to both utility and nonutility employees, as well as electric utility systems, for the final rule to suggest that employers not working for electric utilities could take it upon themselves to apply protective coverings to overhead power lines.
>
> In this connection, EEI wishes to express its very deep concern about the minimal requirements which this standard would seem to propose in order for persons to be considered qualified for work on or associated with energized lines or equipment.
>
> As we read the standard, if a person received an hour of training as to the hazards of working on such equipment, he would be considered qualified within the meaning of the proposal.
>
> Just as an aside here, a qualified lineman, first class lineman, probably has three years of training, just as an example. (Tr. 2–107)

OSHA agrees with EEI that carpenters should not come closer than 10 feet to an overhead power line. The Agency does not intend to allow carpenters to approach as close as 2 feet to an overhead power line or to allow any employee with only 1 hour of training to install protective equipment on such lines.

As noted earlier, the training times listed in the preamble to the proposal were estimates of additional training beyond that already provided by employers to "qualified" employees. These estimates were not intended to provide a training criterion against which to measure an employee's qualifications. Clearly, the additional training alone would not be adequate to make an employee "qualified" if that employee has not already had the training necessary for his or her trade. OSHA expects employers to ensure that any employees they consider "qualified" under these provisions receive training similar (in degree) to that provided to electric power line installers, telephone line installers, or line-clearance tree trimmers, depending on the type of work being performed. An employee who receives this type of training would be qualified to work close to overhead power lines. For example, an electrician working in a substation for a commercial establishment would be permitted to work on electric equipment that is installed less than 10 feet from the overhead power lines feeding the substation. Assuming the electrician is qualified to perform work in such a substation, OSHA sees no safety-oriented reason to require the work to be performed by an electric utility employee whether or not the incoming lines are owned and operated by a utility.

The installation by "qualified persons" of protective equipment, such as rubber insulating line hose or electrically insulating plastic guard equipment, on electric power transmission or distribution is not covered under the final electrical safety-related work practices standard. OSHA considers this type of work to be work on electric power transmission and distribution installations; therefore, when such work is performed by "qualified persons", it is exempt from final §§ 1910.332 through 1910.335, as noted in § 1910.331(c)(1). A note to this effect has been added to § 1910.333(c)(3). Unqualified employees are prohibited from performing this type of work by final § 1910.333(c)(2). The installation of insulation on electric power lines would require the employee to work closer than 10 feet from the lines, and only qualified persons are permitted to work that close to the lines.

For vehicular and mechanical equipment (§ 1910.333(c)(3)(iii)), OSHA is requiring a minimum clearance of 10 feet (305 cm), while NFPA 70E allows equipment other than aerial lifts, mobile cranes, and derrick trucks [13] to come as close as 4 feet to exposed, energized overhead lines. In the final OSHA standard, approaches closer than 10 feet are allowed for: (1) Vehicles in transit; (2) lines protected by insulating barriers; and (3) insulated aerial lifts operated by qualified persons. These closer approach distances are based on exceptions to the 10-foot (305-cm) clearance rules presently contained in the existing OSHA standards noted previously. All of OSHA's existing standards (e.g., § 1910.180(j)(1)) require a basic 10-foot clearance for the specific equipment covered. Additionally, § 1926.600(a)(6) of the Construction Standards requires all mechanical equipment to keep 10 feet away from power lines. Therefore, the new regulations are consistent with OSHA's existing requirements and minimize the confusion as to what clearances are required.

The clearance distances listed in NFPA 70E, as well as those in OSHA's final standard, protect against arc-over of current from the lines to the equipment. Assuming that the equipment would never come any closer than permitted by either standard, both would theoretically provide employees with protection. However, the main

[13] For these types of equipment only, NFPA refers to OSHA's existing standards, which require a minimum clearance of 10 feet.

concern involved in operating mechanical equipment near exposed power lines is unintended movement of the equipment which may bring the equipment too close to the lines. A 10-foot clearance provides a more reasonable margin of error compared to the distances given in NFPA 70E.

Additionally, the clearance distances in NFPA 70E vary according to the type of equipment in use and the voltage of the power lines. Mr. James Sharp of the International Brotherhood of Electrical Workers supported the NFPA approach, stating:

> Ever since I have been in the electrical business, for some 50 years, it has been taught me that distance is a prime factor in consideration when you are dealing with varying voltages. Distance, protection, voltage, you can't separate them. (Tr. 2–17)

OSHA has not accepted this argument. Most employees operating mechanical equipment will not be able to determine the voltage on the power lines and, therefore, will not know the clearance to be maintained. Also, because existing § 1926.600(a)(6) already requires a 10-foot clearance for all types of mechanical equipment used in construction, varying the clearance distance based on voltage (below 50kV) would cause a conflict between the two OSHA standards.

With respect to the hazards of overhead power lines, OSHA feels that its standard provides greater safety than the national consensus standard. In view of the fact that 47 of the 128 electrocutions studied were due to the use of equipment or material too close to exposed energized overhead lines, OSHA believes that requirements to prevent such electrocutions are of the highest priority and should provide as much safety as possible. For these reasons, and in order to promote consistency within the OSHA standards, the final regulations contain a basic 10-foot (305-cm) clearance rule, with certain exceptions. No information was provided during the rulemaking period demonstrating ways in which specific operations could be performed safely with clearances less than 10 feet. Therefore, OSHA made no changes to the basic 10-foot clearance contained in the proposal.

As noted previously, the standard permits approaches closer than 10 feet for: (1) Vehicles in transit; (2) lines protected by insulating barriers; and (3) insulated aerial lifts operated by qualified persons. The 4-foot clearance for vehicles in transit is based on existing §§ 1910.180(j)(1)(iii) and 1926.550(a)(15)(iii). This exception, which requires the boom or other structure to be lowered, allows truck-mounted mechanical equipment to travel safely under power lines that cross streets and highways. On the issue of the 4-foot clearance permitted for vehicles in transit, EEI suggested that OSHA increase the clearance to 4 feet plus 4 inches for every 10 kilovolts over 50 kilovolts (Ex. 4–10). They argued that, while 4 feet was an adequate clearance for voltages under 50 kilovolts, higher voltages necessitate greater clearances for safety's sake. OSHA has accepted this comment and has added the following language in final § 1910.333(c)(3)(iii)(A)(*1*):

> If the voltage is higher than 50 kV, the clearance shall be increased 4 in. (10 cm) for every 10 kV over that voltage.

The National Arborist Association (NAA) expressed concern with proposed § 1910.333(c)(3)(iii)(B), which prohibited employees on the ground from contacting a vehicle or mechanical equipment if it could, in turn, contact an overhead power line (Ex. 4–30). They argued that the use of insulated aerial lifts protected employees on the ground. Under questioning by the attorney representing NAA, an OSHA witness explained that, if an insulated aerial lift is positioned so that the uninsulated portion of the lift cannot come closer to any overhead power line than the distances proposed in Table S–5 (for a qualified person operating the lift), the employees on the ground would be permitted to contact the aerial lift truck and any of its attachments (Tr. 1–32 to 1–34). To clarify the rule, the Agency has revised § 1910.333(c)(3)(iii)(B)(*2*) to read as follows:

§ 1910.333 Selection and use of work practices.

* * * * *

(c) * * *
(3) * * *
(iii) * * *

(B) Employees standing on the ground may not contact the vehicle or mechanical equipment or any of its attachments, unless:

* * * * *

(*2*) The equipment is located so that no uninsulated part of its structure (that portion of the structure that provides a conductive path to employees on the ground) can come closer to the line than permitted in paragraph (c)(3)(iii) of this section.

This language should make it clear that only the uninsulated portion of insulated aerial lifts are used to determine where the aerial lift truck may be located so that employees on the ground may contact the truck.

Paragraph (c)(4) of final § 1910.333 addresses the hazards associated with working near exposed live parts where visibility is impaired. Adequate illumination is required by paragraph (c)(4)(i) to ensure that employees can see well enough to avoid contacting exposed live parts. Specific guidance was not provided in the proposal. Although OSHA requested comments and supporting data with respect to levels of illumination, the only specific levels suggested in the rulemaking record were in the form of appendix guidance and were not supported by any evidence that they were necessary or adequate (Ex. 4–8, 4–25). In enforcing this provision, OSHA will use applicable national consensus standards as guidelines, such as ANSI A11.1, American National Standard Practice for Industrial Lighting. OSHA presently uses this document in enforcing § 1926.56, which addresses illumination in the construction industry.

Paragraph (c)(4)(ii) prohibits the act of blind reaching into areas containing exposed live parts. Obviously, if the live parts cannot be seen, it would be difficult to avoid contact with them. Therefore, the standard does not permit employees to work near exposed live parts that cannot be seen because of obstructions or poor lighting.

Some installations of electric equipment provide little working space for maintenance employees. Such cramped conditions can lead to employees' backing or moving into exposed live parts. To prevent this from occurring, paragraph (c)(5) of final § 1910.333 requires precautions to be taken to assure that accidental contact with the parts does not occur. For example, protective blankets could be used to shield some of the live parts, or portions of the electrical installation could be deenergized. (Of course, there is a regulatory preference for deenergizing the equipment. The conditions specified in § 1910.333(a)(1) would have to be met before the employee could work so close to exposed energized parts.) Also, doors and panels are required to be secured if they could knock into employees and cause them to contact exposed energized parts.

Handling metal ladders and other conductive materials in the vicinity of overhead lines is a leading cause of occupational electrocutions. (See category (i)(c) in Table 2 of this preamble.) Paragraphs (c)(6) and (c)(7) of final § 1910.333 address the hazards associated with such material handling operations. To protect employees handling conductive tools or materials near exposed live parts, paragraph (c)(6) requires conductive materials or equipment to be handled in a manner that will prevent their contacting the

energized parts. Because moving such long metal objects as pipes and ducts can be particularly hazardous in areas containing exposed energized conductors or circuit parts, the final standard also requires employers to institute work practices that minimize the hazards associated with handling these objects. For example, an employer could require employees to handle metal irrigation pipes so that the pipes are always in a horizontal plane. This practice would prevent the material from contacting overhead power lines.

Metal ladders can also provide a path to ground for workers who directly contact live parts. In final § 1910.333(c)(7), OSHA requires portable ladders to have nonconductive siderails if used by employees who would be working where they might contact exposed energized circuit parts. This should protect these workers from electric shock.

In view of the number of accidents that have occurred when metal ladders contacted overhead lines, the Agency requested comments on whether metal ladders should also be prohibited from being used where they might contact energized overhead electric power lines. Three commenters supported a prohibition of metal ladders near exposed, energized overhead power lines (Ex. 4–8, 4–12, 4–29). One commenter stated that the proposal was adequate with regard to the use of metal ladders (Ex. 4–25).

The Agency reviewed the accident information in Exhibits 8 (the OSHA fatality/catastrophe reports) and 4–14 (the NIOSH FACE data) for fatalities and injuries involving the use of metal ladders. There were 24 incidents involving the contact of a metal ladder with an overhead power line. In several cases, multiple fatalities occurred. Although 20 of the 24 cases were categorized under "construction" (Ex. 8), many of the "construction" accidents involved painters, who may or may not have been performing construction work. (Reports were placed in the "construction" category based solely on the SIC classification of the contractor involved.)

Paragraph (a)(11) of existing § 1926.450 addresses the use of ladders near electric circuits in construction. This provision currently prohibits the use of portable metal ladders for electrical work or where the ladders may contact electric conductors. OSHA believes that, where the hazards are the same for work in construction and in general industry, the standards should be essentially the same. This is especially important if employers, such as painting contractors, may have jobs to perform that sometimes fall under the Construction Standards and sometimes fall under the General Industry Standards. Therefore, in final § 1910.333(c)(7), OSHA is adopting a rule that incorporates the construction standard's prohibition on the use of metal ladders where they may contact electric conductors. The language of the final § 1910.333(c)(7) has been taken partly from proposed § 1910.333(c)(7) and partly from the proposed revision of existing § 1926.450(a)(11) (proposed § 1926.1053(b)(12), 51 FR 42765, November 25, 1986). The final rule reads as follows:

> Portable ladders shall have nonconductive siderails if they are used where the employee or the ladder could contact exposed energized parts.

Final § 1910.333(c)(8) prohibits employees from wearing conductive objects, such as metallic jewelry, in a manner presenting an electrical contact hazard. Typical accident descriptions indicate that these metal objects short circuit live parts; and, as current flows through the objects, the employees wearing them are severely burned. Protective methods include wrapping the conductive apparel with nonconductive tape, the use of rubber gloves, and the use of insulation on the live part, as well as the removal of the conductive item. OSHA understands that compliance may present difficulties as many employees may not want to remove or cover certain articles of jewelry. However, given the severity of the possible consequences (e.g., loss of a finger, arm burns, or injury to adjacent coworkers), OSHA believes that some means of protecting the employee, as well as others nearby, must be provided.

Paragraph (c)(9) of final § 1910.333 addresses hazards related to housekeeping duties (such as electric equipment cleaning or vegetation spraying, clipping, or trimming) performed near exposed energized circuit parts. This provision requires the employer to adopt safeguards that prevent *employees* performing such duties from contacting energized parts, either directly or through conductive cleaning aids. Examples of protective measures include the use of protective insulating equipment or the provision of guards to prevent contact.

Paragraph (c)(10) of § 1910.333 contains requirements that restrict the manner in which interlocks may be defeated. Interlocks deenergize circuits to prevent electric shock to persons using equipment or performing minor maintenance or adjustments. However, under some maintenance conditions, the interlocks must be rendered inoperative so that tests or adjustments can be made. To prevent injury to employees who may not realize the hazards involved (both to the person defeating the interlock and to others who may be exposed), paragraph (c)(10) permits only qualified persons to defeat interlocks while they work on the equipment. Also, when the qualified person's work is completed, the interlock system would be required to be put back into an operative condition.

This paragraph was originally proposed as § 1910.333(b)(3), under requirements for work on or near deenergized parts. However, as suggested by one commenter (Ex. 4–8), OSHA has moved the paragraph under § 1910.333(c), which covers work on or near energized parts. OSHA believes that such placement is more appropriate, as interlocks are normally by-passed during work on or near energized parts. In fact, the requirement is only necessary when the equipment protected by the interlock is energized. Additionally, the language of the requirement has been clarified in the final rule to indicate that it applies only to electrical safety interlocks—those that deenergize circuits to prevent electric shock to persons using electric equipment. Interlocks used for equipment control purposes are not included in this requirement. This change was in response to comments that suggested a clarification of the rule (Ex. 4–8, 4–11).

D. § 1910.334

Requirements in this section address the hazards of using electric equipment. Although hazards common to the installation of electric equipment are covered in the existing subpart S regulations, the accidents in OSHA's survey show that equipment is often used improperly or is damaged in use. (See category (v) in Table 2.) Such misuse and abuse of equipment creates hazards which the existing installation standards address only indirectly. The requirements of final § 1910.334 cover these hazards more directly.

Paragraph (a) of final § 1910.334 sets forth requirements on the use of cord- and plug-connected equipment, including extension cords, and addresses common hazards associated with their use. Paragraph (a)(1) requires portable equipment to be handled in a manner which will not cause damage. Paragraph (a)(2)(i) requires visual inspection of cords, plugs, and receptacles, and paragraph (a)(2)(ii) prohibits the use of defective equipment. These requirements protect employees from electric shocks caused by damaged

equipment. Such defects as missing grounding prongs on attachment plugs and poor insulation on conductors have caused injuries to employees.

To prevent the connection of mismatched or misaligned plugs and receptacles, paragraph (a)(2)(iii) requires these devices to be checked to ensure that they are of compatible configurations and are in alignment. If this is not done, an employee might force a plug of one rating into a receptacle of a different rating, leading to a lack of proper overcurrent protection. Other, even worse possibilities include the application of a higher than intended voltage on connected equipment or the impression of voltage on the frame of the equipment through the equipment grounding conductor.

Rules ensuring the continuity of grounding conductors for cord- and plug-connected equipment are set forth in paragraph (a)(3) of final § 1910.334. Paragraph (a)(3)(i) requires power supply and extension cords used with grounding-type equipment to contain an equipment grounding conductor. Paragraph (a)(3)(ii) prohibits alteration of plugs and receptacles to ensure that grounding continuity is maintained across the connection. For example, clipping the grounding prong from a plug is prohibited. Adapters that interrupt grounding continuity are prohibited by paragraph (a)(3)(iii).

Paragraph (a)(4) of final § 1910.334 requires portable electric equipment used in highly conductive locations (e.g., those inundated with water) to be approved for the use. This requirement ensures that the equipment is appropriate for the serious hazards presented by the use of electric equipment in these areas.

Paragraph (a)(5) of final § 1910.334 imposes regulations on the connection of attachment plugs. In the final rule, employees are prohibited from plugging and unplugging energized plugs and receptacles while their hands are wet (paragraph (a)(5)(i)). (The final rule makes it clear that only energized equipment is affected. For example, plugging a deenergized cord into an energized receptacle is covered, as the receptacle is energized equipment.)

The Edison Electric Institute argued that there is a greater hazard if the condition of the plug itself provides a conductive path to the employee's hand (Ex. 4–10). They suggested a prohibition against connecting or disconnecting cords if the plugs are so dirty or wet that a conductive path to the employee's hand is present. OSHA has accepted this comment and has included the following requirement in final § 1910.334(a)(5)(ii):

(ii) Energized plug and receptacle connections may be handled only with insulating protective equipment if the condition of the connection could provide a conducting path to the employee's hand.

Paragraph (a)(5)(iii) of final § 1910.334 (redesignated from proposed paragraph (a)(5)(ii)) requires locking-type connectors to be secured after connection. This rule will prevent this type of connector from separating partially, thus avoiding exposure of the live connector blades (prongs).

The requirements in final § 1910.334(a) ensure that cord- and plug-connected equipment continues to meet the installation requirements currently contained in Subpart S and is used in its intended manner.

Final § 1910.334(b) deals with electric circuits. To protect the operator of a disconnect from its failure, paragraph (b)(1) requires devices used for opening circuits under load to be designed for the purpose.

Circuits deenergized by the operation of a protective device (such as a fuse or circuit breaker) have to be checked to ensure that they can be safely reenergized, as required under paragraph (b)(2). Without such a check, it is possible for an employee to be injured in case of failure of the protective device. Several commenters stated that overcurrent devices on certain circuits are designed to open under overload conditions (Ex. 4–17, 4–43, 27). Under fault conditions (which are the ones that generally make it hazardous to reset circuit breakers or replace fuses manually), other protective elements are designed to operate and open the circuit. The commenters claimed that it would be safe to reset these overload protective devices and suggested that OSHA specifically permit this without a determination of exactly what condition caused the devices to open. Although the Agency agrees with these comments, OSHA notes that the proposal (and the final rule) simply required the employer to determine if it is safe to reenergize the circuit, not to determine the specific cause of the outage. To clarify this provision in the final rule, OSHA has added a note to § 1910.334(b)(2), reading as follows:

Note: When it can be determined from the design of the circuit and the overcurrent devices involved that the automatic operation of a device was caused by an overload rather than a fault condition, no examination of the circuit or connected equipment is needed before the circuit is reenergized.

Paragraph (b)(3) of final § 1910.334 prohibits changing (for maintenance or other purposes) overcurrent protective devices in any manner which would violate § 1910.304(e), the installation safety requirements for overcurrent protection. This provision will prevent the use of a fuse or circuit breaker with a rating too high to protect the equipment or conductors involved. This provision is also intended to prevent the temporary bypassing of protective devices, which could lead to shock and fire hazards.

Paragraph (c) of final § 1910.334 sets forth requirements on the use, rating, and inspection of electrical test instruments and equipment. Because the use of test instruments can expose employees to live parts of electric circuits, paragraph (c)(1) requires testing work on electric circuits or equipment to be performed by qualified persons.

To prevent injuries to employees resulting from exposed conductors or other defects in the test equipment, paragraph (c)(2) requires the visual inspection of such equipment before use. Of course, employees would not be permitted to use defective or damaged equipment until it has been repaired.

Using test equipment in improper environments or on circuits with voltages or currents higher than the rating of the equipment can cause the equipment's failure. Since employees can be injured as a result of this failure, paragraph (c)(3) requires test equipment to be used within its rating and to be suitable for the environment in which it is to be used.

Paragraph (d) of final § 1910.334 requires suitable protective measures to be taken to protect against the hazards of using flammable and ignitible materials occasionally in ordinary locations (those which are not covered by existing § 1910.307). While storage, manufacture, and other on-going presence of flammables are covered under the installation requirements for hazardous locations contained in subpart S, temporary uses are not covered. The final standard prohibits energizing electric equipment where it might ignite flammable or ignitible materials, unless suitable protective measures are taken. Protective measures could include ventilation and clearing accumulations of combustible dusts, as appropriate.

E. § 1910.335

The requirements of this section address accidents involving the failure to use protective equipment. Paragraph (a) of final § 1910.335 addresses the proper use of protective equipment. Requirements include those on inspection, protection, and situations

demanding the use of personal protective equipment. These regulations are intended to ensure that the equipment will actually provide insulation of and safety to the employee.

OSHA's existing regulations [14] on the design of insulating protective equipment are contained in § 1910.137, in subpart I of 29 CFR part 1910, which references various American National Standards Institute (ANSI) standards.

NFPA 70E refers to more recent (but not the most recent) editions [15] of the same ANSI standards. Although OSHA is not making changes to § 1910.137 in the present rulemaking, the Agency has proposed to revise this section in connection with its rulemaking on electric power generation, transmission, and distribution. (A notice of proposed rulemaking was published on January 31, 1989 (54 FR 4974).) The proposed revision of § 1910.137 would replace the incorporation of the out-of-date consensus standards with a set of performance-oriented requirements that are consistent with the latest revisions of these consensus standards. Additionally, the protective equipment proposal includes requirements for the safe use and care of electrical protective equipment to complement the equipment design provisions.

Paragraph (a) of final § 1910.335 also addresses the use of other types of protective equipment not specifically covered in subpart I, such as fuse handling devices, nonconductive rope, and protective shields and barriers. Requirements are included for the use of equipment that is appropriate for the parts of the body to be protected and for the work being performed; for the maintenance of protective equipment; and for the protection of this equipment during use. These requirements are unchanged from the proposal; there were no significant comments received on these provisions.

Paragraph (b) of final § 1910.335 applies to alerting techniques. To inform employees about electrical hazards to which they are exposed, safety signs and symbols are required by paragraph (b)(1). (Requirements for safety signs, symbols, and tags are contained in existing § 1910.145. The subpart S requirement for safety signs, symbols, and tags does not increase the burden imposed by this existing standard. This provision is included in the final rule because the following two paragraphs are dependent upon the requirement for safety signs and tags.) Paragraph (b)(2) requires the use of barricades to limit access to areas containing exposed, energized electric parts. If signs and barricades alone will not adequately protect employees, an attendant to guard the area and warn other employees is required by paragraph (b)(3).

F. § 1910.399

OSHA is applying the definitions in existing § 1910.399 to the entire subpart S and is removing the paragraph designations from the section.

It is OSHA's intent, as noted earlier, that the standard not apply to tree-trimming operations performed near overhead power lines as long as qualified employees are performing the work. (OSHA has proposed, instead, to cover line-clearance tree-trimming operations performed by line-clearance tree trimmers in the forthcoming electric power generation, transmission, and distribution standard mentioned previously.) In order to clarify this in the final standard, the Agency has added a note to § 1910.331(c)(1) and a definition of "line-clearance tree trimming." The addition of this term, the definition of which was not included in the proposal, and of the note, which was discussed under § 1910.331 in this section of the preamble, should help clarify the intent of the standard.

The final standard adds an explanation of the use of the word "may" to the definitions already contained in § 1910.399. Conforming to correct grammar and to existing usage in subpart S, OSHA has used the words "may" and "shall" as follows:

A. If a discretionary right, privilege, or power is conferred, the word "may" has been used. (For example: the employer may restrict access to equipment; i.e., it is permissible for the employer to do this.) Such rules are permissive in nature and are usually used as exceptions to requirements.

B. If a right, privilege, or power is abridged, or if an obligation to abstain from acting is imposed, the word "may" has been used with a restrictive "no," "not," or "only." (For example: (1) No unqualified person may enter restricted areas; (2) unqualified persons may not enter restricted areas; or (3) only qualified persons may enter restricted areas. For all three cases, persons who are not qualified are prohibited from restricted areas). These requirements are mandatory.

C. If an obligation to act is imposed, the word "shall" has been used. (For example: employers shall restrict access to areas containing live parts.) These rules are mandatory upon the employer to act.

The use of these terms in the final standard is consistent with their use in the existing subpart S. The definition of "may" is unchanged from the proposal.

OSHA received numerous comments on the definition and use of the term "qualified person" in the proposal (Ex. 4–9, 4–10, 4–13, 4–16, 4–20, 4–25, 4–26, 4–20, 4–29, 4–30). Many of them argued that the definition contained in existing § 1910.399 was inadequate (Ex. 4–10, 4–16, 4–20, 4–25, 4–26). These commenters again cited the short training times they mistakenly believe OSHA is requiring. (See the discussion of § 1910.332, earlier in this section of the preamble.)

As stated previously, OSHA realizes that different types of work demand different levels of training. In fact, it can take many years for certain types of employees to become fully qualified for the demanding type of work they do (Tr. 2–107). (This training is provided, in large part, in the absence of regulation; therefore, the Agency did not include this in its determination of costs imposed by the standard.) The discussions earlier in this preamble and in the preamble to the proposal make this clear. The definition of "qualified person" in the existing regulation is identical to the definition of the same term in the National Electrical Code, and the Agency has been using it (or one virtually identical to it) for over 17 years without problems. Therefore, OSHA has determined that it is not necessary to revise the wording of the existing definition.

---

[14] *§ 1910.137 Electrical protective devices.* Rubber protective equipment for electrical workers shall conform to the requirements established in the American National Standards Institute Standards as specified in the following list:

Item	Standard
Rubber insulating gloves	J6.6—1967
Rubber matting for use around electric apparatus.	J6.7—1935 (R 1962)
Rubber insulating blankets.	J6.4—1970
Rubber insulating hoods	J6.2—1950 (R 1962)
Rubber insulating line hose.	J6.1—1950 (R 1962)
Rubber insulating sleeves.	J6.5—1962

[15] Blankets—ANSI/ASTM D1048–1977, Specifications for Rubber Insulating Blankets

Hoods—ANSI/ASTM D1049–1977, Specifications for Rubber Insulating Covers

Line Hose—ANSI/ASTM D1050–1977, Specifications for Rubber Insulating Line Hoses

Sleeves—ANSI/ASTM D1051–1977, Specifications for Rubber Insulating Sleeves

Gloves—ANSI/ASTM D120–1977, Specifications for Rubber Insulating Gloves

Mats—ANSI/ASTM D178–1977, Specifications for Rubber Insulating Matting

ANSI—American National Standards Institute

ASTM—American Society for Testing and Materials

On the other hand, several commenters argued that the definition could be clarified (Ex. 4–9, 4–13, 4–28, 4–30). Two of them pointed to the discussion of § 1910.331(c) in the preamble to the proposal, which provided guidance on whether a person should be considered "qualified," and suggested that it might be added as a note to the definition of "qualified person" (Ex. 4–9, 4–13). OSHA has accepted this comment, and the final rule amends the existing definition with the addition of the following note:

Note 1: Whether an employee is considered to be a "qualified person" will depend upon various circumstances in the workplace. It is possible and, in fact, likely for an individual to be considered "qualified" with regard to certain equipment in the workplace, but "unqualified" as to other equipment. (See § 1910.332(b)(3) for training requirements that specifically apply to qualified persons.)

The National Arborist Association was concerned that the definition of "qualified person" did not adequately address employees who are in training to become qualified (Ex. 4–30). In their comment, they quoted the definition of "qualified line-clearance tree-trimmer trainee" from the American National Standard for Tree Care Operations—Pruning, Trimming, Repairing, Maintaining, and Removing Trees, and Cutting Bush—Safety Requirements, ANSI Z133.1, as follows:

Qualified line-clearance tree-trimmer trainee. Any worker regularly assigned to a line-clearance tree-trimming crew and undergoing on-the-job training who, in the course of such training, has demonstrated his ability to perform his duties safely at his level of training.

They further stated:

The long standing proven technique for employee learning of line clearance tree trimming is for the trainee to receive on-the-job training under the careful eye of an experienced employee. The central tenet of this training process is that the trainee is not permitted to do more than the level of his safety training permits him to do. This is reflected in the above quoted ANSI trainee definition. The problem with the proposed § 1910.399 definition therefore is that it fails to account for the special status of trainees—it does not treat trainees as qualified. As a result, members of the same crew, under the proposal, untenably would be subject to different OSHA standards depending on the level of the same job they were performing! The suggested solution is to adopt the ANSI definitions and exempt both qualified employees and qualified trainees (short of exempting the tree industry altogether). (Ex. 4–30)

OSHA does not, however, consider trainees as being unqualified persons. This question was addressed at the hearing during the following exchange between OSHA (Mr. Wallis) and the attorney representing the National Arborist Association (Mr. Semler):

Mr. Semler: What is OSHA's intent . . . with respect to a line clearance tree-trimmer trainee who is part of a crew that would otherwise be exempt?

That person typically in the industry is allowed to do work commensurate with his training and experience but the standard doesn't particularly address the trainee issue.

Would the trainee share the exemption otherwise available to the crew?

Mr. Wallis: Yes, but only up to a point. Obviously the first time he comes onto the job we don't expect a trainee to be able to just go up and trim the overhead line. He wouldn't really have the knowledge or the skills and I think you would admit that.

As he progresses in his training, he is going to be held more and more qualified . . . He has to be qualified for the task he's doing in other words.

Mr. Semler: And if he qualified for the task he's doing, he would share the exemption?

Mr. Wallis: Yes. (Tr. 1–27 to 1–28)

The Agency realizes that this concept is not readily apparent from the text of the existing definition.Therefore, OSHA is adding a second note to the definition explaining its application to trainees. The basic thrust of the note has been taken from the ANSI Z133.1 definition of "line-clearance tree-trimmer trainee" and from the National Arborist Association's comment that trainees are carefully supervised. The language of the note is general, however, so that it applies to any employees who are undergoing on-the-job training to become qualified employees, rather than restricted to tree trimmers only. (Line-clearance tree-trimmer trainees, like line-clearance tree trimmers and qualified power line workers, would be covered under proposed § 1910.269 (54 FR 4974).) New note 2 to the existing definition reads as follows:

Note 2: An employee who is undergoing on-the-job training and who, in the course of such training, has demonstrated an ability to perform duties safely at his or her level of training and who is under the direct supervision of a qualified person is considered to be a qualified person for the performance of those duties.

G. Miscellaneous

Various general industry standards have continued to reference the 1971 NEC, even though the latest revision of subpart S makes such references unnecessary. Therefore, a number of miscellaneous amendments were proposed to substitute references to subpart S for the current references to the NEC (§§ 1910.68 (b)(4) and (c)(5)(iv)(*c*), 1910.94(a)(2)(iii), 1910.103(b)(3)(iii)(*e*), 1910.106 Tables H–18 and H–19, 1910.110 Table H–28, and 1910.178(c)(2)). In five other places in part 1910 (§§ 1910.106(h)(7)(iii)(*a*), 1910.179(g)(1)(i), 1910.252(a)(6)(iv)(*d*)(*2*), and 1910.261 (g)(1)(iv) and (k)(16)), the regulations contain inaccurate references to the electrical standards. OSHA proposed to revise these provisions so that they refer to subpart S. No objections were made to these proposed revisions, and the final rule adopts the revisions as proposed.

Other changes were proposed to consolidate electrical safety-related work practices in subpart S and, where possible, eliminate them from other subparts of part 1910 (§§ 1910.26(c)(3)(viii), 1910.67(b)(4), 1910.180(j), 1910.181(j)(5), 1910.265(c)(12), and 1910.266(c)(6)(xxii)). The United Steelworkers of America (USWA) objected to the proposed elimination of §§ 1910.26(c)(3)(viii), 1910.265(c)(12), and 1910.266(c)(6)(xxii) (Ex. 4–45).

Existing § 1910.26(c)(3)(viii), in subpart D of part 1910, reads as follows:

(viii) Users are cautioned to take proper safety measures when metal ladders are used in areas containing electric circuits to prevent short circuits or electrical shock.

The USWA believes that this regulation should not be eliminated because it is the only reference in the ladder standards to the hazard of using ladders near electric circuits.

Final § 1910.333 (c)(6) and (c)(7), in subpart S of part 1910, contain requirements for handling portable ladders near energized conductors, including a prohibition against using portable ladders with conductive side rails where an employee or the ladder might contact energized parts. The new subpart S requirements clearly provide better protection of employees than the existing subpart D provision. Therefore, the removal of existing § 1910.26(c)(3)(viii) is justified. However, rather than eliminate this paragraph entirely, the final rule has replaced this provision with a reference to the provisions of subpart S dealing with work performed on or near exposed energized electric circuit parts (which includes the requirement pertaining to the use of ladders). A reference to electrical hazards will thus be retained within the ladder standards themselves.

With respect to the removal of § 1910.265(c)(12), the USWA argued that paragraphs (c)(12) (iv), (vii), and (ix) are not specifically covered elsewhere. These three provisions read as follows:

§ 1910.265 Sawmills.

* * * * *

(c) * * *

(12) * * *

(iv) *Protective equipment.* Rubber protective equipment shall be provided as required by § 1910 137.

* * * * *

(vii) *Overload relays.* Overload relays shall be reset by authorized qualified personnel only.

* * * * *

(xi) *Bridging fuses.* Doubling or bridging fuses shall be prohibited.

Paragraph (c)(12)(iv) is simply a reference to § 1910.137, and the hazards addressed by this paragraph are clearly covered in § 1910.137.

The hazard addressed by paragraph (c)(12)(vii) is covered by new § 1910.334(b)(2), which requires a determination of the safety involved in resetting circuit protective devices. The existing regulation requires authorized qualified personnel to perform the resetting only; it does not require any determination of the safety of doing so. The new provision more directly addresses the hazard of resetting an overcurrent protective device when it is not safe to do so than the existing regulation.

Bridging fuses, the subject of § 1910.265(c)(12)(ix), is covered by new § 1910.334(b)(3). In fact, the new regulation prohibits any modification of overcurrent protection that would cause the protection to be inadequate. The old provision only prohibits bridging and doubling fuses. Clearly, the new requirement more effectively protects employees than existing § 1910.265(c)(12)(ix).

Existing § 1910.266(c)(6)(xxii) reads as follows:

§ 1910.266 Pulpwood logging.

* * * * *

(c) * * *

(6) * * *

(xxii) When any equipment is being moved or operated in the vicinity of an electric distribution line a minimum clearance of ten feet shall be maintained between the electric distribution line and all elements of the machine.

The hazard covered in this provision is better addressed by new § 1910.333(c)(3)(iii). The existing regulation only provides for a 10-foot clearance, without regard to the voltage on the line. The new requirement includes considerations, such as voltages greater than 50 kilovolts, deenergizing and guarding the power lines, and additional protective measures for personnel on the ground. Thus, the new rule provides far better protection for employees than the old one.

For these reasons, OSHA has decided to remove the existing provisions as proposed except that § 1910.26(c)(3)(viii) is revised to refer to new § 1910.333(c). The following regulations in the existing General Industry Standard are removed: §§ 1910.67(b)(4), 1910.180(j), 1910.181(j)(5), 1910.265(c)(12), and 1910.266(c)(6)(xxii).

The last proposed miscellaneous revision was to remove existing paragraph (b)(1) from § 1910.304. Since this provision relates only to construction work, its inclusion in the General Industry Standard is unnecessary. The same requirement is appropriately contained in § 1926.404(b)(1) of subpart K of part 1926, the Construction Safety and Health Standards. OSHA received no substantive objection to the removal of this provision; therefore, the final rule deletes paragraph (b)(1) of § 1910.304 from the General Industry Standards.

IV. Regulatory Impact Assessment

The final Regulatory Impact and Flexibility Analysis for the standard on electrical safety-related work practices for general industry was prepared in accordance with the requirements of Executive Order 12291 and the Regulatory Flexibility Act of 1980 (5 U.S.C. 601 *et seq.*). Since the standard is not likely: (1) To have an annual effect on the economy of $100 million; (2) to result in a major increase in costs or prices for consumers, industries, government agencies or geographic regions; or (3) to have significant adverse effects on competition, employment, investment, productivity, innovation, or the ability of United States-based enterprises to compete with foreign-based enterprises, the standard does not constitute a major rule under the cost criteria of Executive Order 12291. However, because of the wide ranging impact, OSHA is treating this standard as if it were a major rule.

A. Affected Industries

The standard will apply to every major standard industrial code (SIC) economic division with the exception of Agriculture, Construction and parts of Mining, Transportation, Communication and Public Utilities. Based on 1983–1987 data, covered industries accounted for about 4.6 million establishments.[16]

B. Benefits

The analysis of the benefits of the standard was based on annual data averaged from 1983 to 1987. OSHA found that under existing practices an average 92 deaths and 3,996 disabling and nondisabling injuries covered by this standard occurred annually between 1983 and 1987.

To estimate potential benefits of the standard or its probable effectiveness in preventing electrical contact injuries (e.g. shock, electrocution), an analysis of differential risk was performed. The analysis revealed that approximately 3,400 disabling and nondisabling injuries and 78 fatalities (at the 85 percent effectiveness level for this regulation) should be avoided each year after the rule is promulgated (see Table 5). In addition to the estimated 85 percent effectiveness level, a sensitivity analysis using 75 percent and 95 percent effectiveness rates is also presented.

[16] From this data, there are 1,065,558 "affected" establishments. See Table II–1 in the final Regulatory Impact Analysis, which is available to the public in the OSHA Docket Office.

TABLE 5.—REDUCTION IN INJURIES

Type of injury	Average annual elec. injuries in industries covered by the standard, 83–87	Average No. of electrical injuries caused by work practices (.75 fatal/.50 nonfatal)	Injuries averted		
			(0.75)	(0.85)	(0.95)
Nondisabling	4,320	2,160	1,620	1,836	2,052
Disabling	3,671	1,836	1,377	1,560	1,744
Fatal	122	92	69	78	87
Total Injuries	8,113	4,088	3,066	3,474	3,883

Source: U.S. Department of Labor, OSHA, Office of Regulatory Analysis.

C. Technical Feasibility and Costs

OSHA has determined that the standard is technologically feasible, as all of the provisions can be met by using currently available equipment.

Current practices are used for the cost analysis baseline. In estimating the industrywide costs of complying with the standard, it was assumed that workplaces would incur costs relating to:

—Providing appropriate training to employees, and
—Meeting the requirements of the lockout and tagging provision.

The first-year cost of the standard is estimated at $74.6 million (in 1989 dollars), with recurring annual costs totaling $20.3 million per year (in 1989 dollars) (see Table 6).

TABLE 6—COSTS OF TRAINING AND LOCKOUT/TAGOUT * (1989 DOLLARS)

Costs	First year ($000)	Annual recurring ($000)
Training	$71,520	$17,880
Lockout/tagout	3,092	2,454
Total	74,613	20,334

*Numbers may not add exactly due to rounding.
Source: U.S. Department of Labor, OSHA, Office of Regulatory Analysis.

TABLE 7.—OCCUPATIONS REQUIRING TRAINING

Training category—Estimated time required	Occupation	Population to be trained [1]
High level training	Electrical Assemblers [2]	124,280
	Machine Assemblers	49,224
	Electricians	165,689
	Stationary Engineers [2]	13,956
	AC/Heating/Refrig Mech/Install	67,028
	Industrial Machinery Mechanics	342,453
	Precision Instrument Repairers	42,239
	Maintenance Repairers, Gen Util	817,232
1½ hours	All Other Elec Mech/Install/Rep	33,098
	Radio Mechanics	4,047
	Electronic Home Enter Equip Rep	36,690
	Electronic Rep, Com/Ind Equip	34,914
	Electronic Technician [2]	147,613
	Crane and Tower Operators	45,929
Subtotal		1,924,392
Average level training	Home Appl and Power Tool Rep	66,223
	Office Machine Servicers	52,520
	Blue Collar Worker Supervisors [3]	294,150
	Gas and Petroleum Plant Occup [3]	7,538
1 hour	Subtotal	420,431
Minimal level training	Welders and Cutters [3]	56,194
	Roustabouts [2]	23,681
	Truck Drivers—Light & Heavy [3]	459,842
	Painters and Paper Hangers [2]	34,268
	Industrial Machine Operators [2]	190,349
½ hour	Riggers [3]	2,416
	Electrical Engineers [2]	170,860
Subtotal		937,610
Total		3,282,433

[1] U.S. Department of Labor, Bureau of Labor Statistics, *National OES Survey-Based Matrix, Industry-Occupation Employment,* for the years 1984, 1986, and 1988.
[2] Population to be trained represents 50 percent of all employees in this occupation.
[3] Population to be trained represents 25 percent of all employees in this occupation.

The allocation of training costs for OSHA's electrical safety work practices standard is based on the categorization of occupations according to the actual or potential risk of injury associated with working on or near exposed live electrical circuitry. Occupations were grouped into high, average, and minimal level training categories based on the level of worker exposure to electrical hazards and on the incidence rate of electrical injuries per occupation (see Table 7).

Populations to be trained were taken from the BLS *National OES Survey-Based Matrix, Industry-Occupation Employment,* for the years 1984, 1986, and 1988. Incidence rates were derived from Bureau of Labor Statistics Supplementary Data System data. Department of Labor Fatality/Catastrophe and Underwriters Laboratories (UL) electrical injury reports were also used to determine, quantitatively, occupations with high electrical hazard exposures. For example, of 208 serious electrical injury and death reports, Electricians accounted for 47; these occupations were placed in the high level training category. In the minimal level training category, Welders and Cutters accounted for 12 injuries and deaths and Truck Drivers accounted for 15. The UL and Fatality/Catastrophe data sets were generally consistent with the SDS-generated injury incidence rates; occupations with a high incidence rate of electrical injury accounted for a relatively large proportion of the Fatality/Catastrophe and UL reports, and occupations with a low SDS incidence rate generally accounted for fewer injuries.

Occupations were placed in the three categories (high, average, and minimal level training) based largely on their electrical injury incidence rates. However, some occupations with relatively low incidence rates were placed in a higher category because of the degree of their exposure to electrical hazards. For example, electronic technicians and radio mechanics had an incidence rate that would have placed them in the minimal level training group, but their high exposure to electrical

hazards prompted OSHA to place them in the high level training category for the purposes of the regulatory analysis.[17]

Based on this categorization scheme, one and a half hours of training would be needed for the 1,924,392 employees in the high level training category, one hour of training for the 420,431 employees in average level training jobs, and one-half hour of training for the 937,610 employees in the minimal level training category (Table 7). This training will be in addition to that already received under current practices for each of the listed occupations. For example, electricians currently receive extensive training, usually requiring an apprenticeship during the first years of work. This occupational group would require an hour and a half of additional training pertaining to electrical work practices covered under this standard.

Paragraph (b) of section 1910.333 establishes requirements pertaining to work performed on or near deenergized electrical circuits. Costs will be incurred in the purchase of locks and tags and also from the execution of the lockout/tagout procedure. The sum of the industrywide costs for locks and tags and for the execution of the procedure yields a total first year lockout/tagout cost of $3,092,470.

OSHA did not calculate the cost of procuring electrical protective equipment for compliance with the standard. Employers are already required to have adequate supplies of rubber insulating equipment by Section 1910.132.[18] Therefore, OSHA has concluded that the standard will not result in a significant purchase of additional protective equipment.

D. Economic Feasibility and Impacts

OSHA has also determined that the standard will be economically feasible. The potential impacts of compliance on individual firms were evaluated by using financial models of firms in two industries. Industries selected represented a range of diversity with respect to the degree of electrical hazards present and the amount of effort required to comply with the standard. The first-year model firm costs ranged from $37 to $82 for small firms and from $451 to $1,825 for large firms. The analysis revealed that even if the entire cost of compliance were passed forward, the impact on prices would be extremely small. With respect to the standard's potential impact on the profitability of firms, the analysis showed that even if the compliance costs were fully absorbed, profitability as measured by return on assets and profit margin would not be significantly reduced. None of the reductions would exceed 0.70 percent.

E. Regulatory Flexibility Certification

Pursuant to the Regulatory Flexibility Act of 1980 (5 U.S.C. 601 *et seq.*), OSHA has assessed the impact of the standard and certifies that it will not have a significant impact on a substantial number of small entities. The majority of the firms subject to the standard are small. Using a definition of a small firm as one that employs fewer than 20 workers, about 84 percent of all the covered firms fall into the "small" category. The estimated cost of compliance with the standard, however, would result in less than a 0.20 percent decrease in profitability. OSHA has determined that, although many small firms will be affected by the standard, the costs will be easily absorbed and there will be no significant or disproportionate impact on small entities.

F. Environmental Effects

The standard's provisions have been reviewed in accordance with the requirements of the National Environmental Policy Act (NEPA) of 1969 (42 U.S.C. 4321, *et seq.*), the regulations of the Council on Environmental Quality (40 CFR parts 1500–1517), and the Department of Labor's NEPA Procedures (29 CFR part 11). As a result of this review, OSHA has determined that these provisions will have no significant effect on air, water or soil quality, plant or animal life, on the use of land, or other aspects of the environment.

G. Regulatory Impact Analysis

The preceding discussion summarizes the key findings of the final Regulatory Impact Analysis (RIA) of the amendment to subpart S, part 1910, prepared by the Office of Regulatory Analysis of the Occupational Safety and Health Administration. The RIA includes assessments of estimated compliance costs, estimated benefits, risks, small business impact, alternative regulatory and nonregulatory options and a profile of the industry. The RIA is based on contract work performed for OSHA by JACA Corp. Their report (Ex. 1), "Regulatory Assessment of the Impact of the Proposed Electrical Safety-Related Work Practices Standard, Final Report", January 20, 1984, and OSHA's final Regulatory Impact Analysis are available to the public in the OSHA Docket Office.

V. International Trade

Increases in the price of domestically manufactured goods in general result in an increase in the demand for imports, and a decrease in the demand for exports. The magnitude of this impact depends on the relevant demand elasticities and the magnitude of the price changes. While the final standard may result in slightly higher prices of manufactured goods, the estimated magnitude of this increase is so small that the Agency has concluded that any resultant impact on foreign trade will be negligible.

VI. Recordkeeping

The standard references the requirements for safety signs and tags contained in existing § 1910.145. The paperwork requirements of § 1910.145 are currently approved by the Office of Management and Budget in accordance with the Paperwork Reduction Act of 1980 under OMB control number 1218–0132.

VII. Effective Date

In developing the Final Rule, OSHA has considered whether a delayed effective date is necessary for any of the provisions of the standard. Employers will need adequate time to integrate their procedures for complying with the lockout and tagging provisions in this standard into the procedures used under the generic lockout standard, § 1910.147, published on September 1, 1989 (54 FR 36644). The generic lockout standard became effective on January 2, 1990. A period of 120 days should be adequate for this purpose, since the Final Rule does not require extensive retrofitting or major modifications of existing equipment. The Agency believes that 120 days is also adequate time for employers to obtain the necessary hardware needed for compliance with the new standard (primarily locks and tags). Lastly, this amount of time should be adequate for employers to ensure that their work practices conform to the requirements of the new standard.

However, OSHA received some evidence during the rulemaking that it could take some employers a year or more to incorporate the training required by the standard into their existing training programs. For example, Mr. Lamont Turner, testifying on behalf of Edison Electric Institute, stated that it took his company 15 months to restructure their training program in

[17] See the final Regulatory Impact Analysis, which is available to the public in the Docket Office, for a complete discussion of the placement of occupations into each category and for a listing of the actual electrical injury incidence rates for those occupations.

[18] The rulemaking record contained no evidence indicating that employers had insufficient supplies of protective equipment to meet the standard.

order to meet regulations on hazardous waste (Tr. 2–178). Therefore, OSHA is making the requirements on training contained in § 1910.332 effective one year from the date of publication of the standard.

VIII. List of Index Terms

Electric power; fire prevention; flammable materials; occupational safety and health; Occupational Safety and Health Administration; safety; signs and symbols; and tools.

IX. Federalism

This Final Rule has been reviewed in accordance with Executive Order 12612 (52 FR 41685, October 30, 1987), regarding Federalism. This Order requires that agencies, to the extent possible, refrain from limiting state policy options, consult with states before taking any actions which would restrict state policy options, and take such actions only if there is clear constitutional authority and the presence of a problem of national scope. The Order provides for preemption of state law only if there is a clear Congressional intent for the Agency to do so. Any such preemption is to be limited to the extent possible.

Section 18 of the Occupational Safety and Health Act (OSH Act) expresses Congress' clear intent to preempt state laws relating to issues on which Federal OSHA has promulgated occupational safety and health standards. Under the OSH Act, a state can avoid preemption only if it submits, and obtains Federal approval of, a plan for the development of such standards and their enforcement. Occupational safety and health standards developed by such Plan-States must, among other things, be at least as effective in providing safe and healthful employment and places of employment as the Federal standards. Where such standards are applicable to products distributed or used in interstate commerce, they may not unduly burden commerce and must be justified by compelling local conditions. (See section 18(c)(2) of the OSH Act.)

The Federal standard on electrical safety-related work practices addresses hazards which are not unique to any one state or region of the country. Nonetheless, states with occupational safety and health plans approved under section 18 of the OSH Act will be able to develop their own state standards to deal with any special problems which might be encountered in a particular state. Moreover, because this standard is written in general, performance-oriented terms, there is considerable flexibility for state plans to require, and for affected employers to use, methods of compliance which are appropriate to the working conditions covered by the standard.

In brief, this Final Rule addresses a clear national problem related to occupational safety and health in general industry. States which have elected to participate under section 18 of the OSH Act are not preempted by this standard and will be able to address any special conditions within the framework of the Federal Act, while ensuring that the state standards are at least as effective as this standard.

X. State Plan Standards

The 23 states and 2 territories with their own OSHA approved occupational safety and health plans must adopt a comparable standard within 6 months of the publication date of the final standard. These states and territories are: Alaska, Arizona, California, Connecticut,[19] Hawaii, Indiana, Iowa, Kentucky, Maryland, Michigan, Minnesota, Nevada, New Mexico, New York,[20] North Carolina, Oregon, Puerto Rico, South Carolina, Tennessee, Utah, Vermont, Virginia, Virgin Islands, Washington, and Wyoming. Until such time as a state standard is promulgated, Federal OSHA will provide interim enforcement assistance, as appropriate, in these states.

XI. Authority

This document was prepared under the direction of G.F. Scannell, Assistant Secretary of Labor for Occupational Safety and Health, U.S. Department of Labor, 200 Constitution Avenue NW., Washington, DC 20210.

Accordingly, pursuant to sections 4, 6, and 8 of the Occupational Safety and Health Act of 1970 (29 U.S.C. 653, 655, 657), Secretary of Labor's Order No. 9–83 (48 FR 35736), and 29 CFR part 1911, 29 CFR part 1910 is amended as set forth below.

Signed at Washington, DC, this 27th day of July 1990.

G.F. Scannell,

Assistant Secretary of Labor.

Part 1910 of title 29 of the Code of Federal Regulations is amended as follows:

PART 1910—[AMENDED]

1. The authority citation for subpart D of part 1910 continues to read as follows:

Authority: Secs. 4, 6, 8, Occupational Safety and Health Act of 1970 (29 U.S.C. 653, 655, 657); Secretary of Labor's Order No. 12–71 (36 FR 8754), 8–76 (41 FR 25059), or 9–83 (48 FR 35736), as applicable. Sections 1910.23, 1910.24, 1910.25, 1910.26, and 1910.28 also issued under 29 CFR part 1911.

2. Paragraph (c)(3)(viii) of § 1910.26 is revised to read as follows:

§ 19.10.26 Portable metal ladders.

* * * * *

(c) * * *

(3) * * *

(viii) See § 1910.333(c) for work practices to be used when work is performed on or near electric circuits.

Subpart F—Authority [Amended]

3. The authority citation for subpart F of part 1910 continues to read as follows:

Authority: Secs. 4, 6, 8, Occupational Safety and Health Act of 1970 (29 U.S.C. 653, 655, 657); Secretary of Labor's Order No. 12–71 (36 FR 8754), 8–76 (41 FR 25059), or 9–83 (48 FR 35736), as applicable. Sections 1910.66, 1910.67, 1910.68, and 1910.70 also issued under 29 CFR part 1911.

4. Entire paragraph (b)(4) of § 1910.67 is revised to read as follows:

§ 1910.67 Vehicle-mounted elevating and rotating work platforms.

* * * * *

(b) * * *

(4) For operations near overhead electric lines, see § 1910.333(c)(3).

* * * * *

5. Paragraphs (b)(4) and (c)(5)(iv)(c) of § 1910.68 are revised to read as follows:

§ 1910.68 Manlifts.

* * * * *

(b) * * *

(4) *Reference to other codes and subparts.* The following codes, and subparts of this part, are applicable to this section: Safety Code for Mechanical Power Transmission Apparatus, ANSI B15.1–1953 (R 1958), and subpart O; subpart S; Safety Code for Fixed Ladders, ANSI A14.3–1956, and Safety Requirements for Floor and Wall Openings, Railings and Toeboards, ANSI A12.1–1967, and subpart D.

* * * * *

(c) * * *

(5) * * *

(iv) * * *

(c) Where flammable vapors or combustible dusts may be present, electrical installations shall be in accordance with the requirements of subpart S of this part for such locations.

* * * * *

[19] Plan covers only State and local government employees.

[20] Plan covers only State and local government employees.

Subpart G—Authority [Amended]

6. The authority citation for subpart G of part 1910 continues to read as follows:

Authority: Secs. 4, 6, 8, Occupational Safety and Health Act of 1970 (29 U.S.C. 653, 655, 657); Secretary of Labor's Order No. 12–71 (36 FR 8754), 8–76 (41 FR 25059), or 9-83 (48 FR 35736), as applicable. Sections 1910.94 and 1910.99 also issued under 29 CFR part 1911.

§ 1910.94 [Amended]

7. The words: "the National Electrical Code, NFPA 70–1971; ANSI C1–1971 (Rev. of C1–1968)" are removed from paragraph (a)(2)(iii) of § 1910.94 and are replaced with: "Subpart S of this part."

Subpart H—Authority [Amended]

8. The authority citation for subpart H of part 1910 is revised to read as follows:

Authority: Secs. 4, 6, 8, Occupational Safety and Health Act of 1970 (29 U.S.C. 653, 655, 657); Secretary of Labor's Order No. 12–71 (36 FR 8754), 8–76 (41 FR 25059), or 9–83 (48 FR 35736), as applicable. Sections 1910.103, 1910.106, 1910.107, 1910.108, 1910.109, and 1910.110 also issued under 29 CFR part 1911.

Section 1910.120 issued under the authority of section 126 of the Superfund Amendments and Reauthorization Act of 1986 as amended (29 U.S.C. 655 note), secs. 6 and 8 of the Occupational Safety and Health Act of 1970 (29 U.S.C. 655, 657), secs. 4 of the Administrative Procedure Act (5 U.S.C. 553), 29 CFR part 1911, and Secretary of Labor's Order 9–83 (48 FR 35736).

9. Paragraph (b)(3)(iii)(*e*) of § 1910.103 is revised to read as follows:

§ 1910.103 Hydrogen.

* * * * *

(b) * * *

(3) * * *

(iii) * * *

(*e*) Electric equipment shall be in accordance with the requirements of subpart S of this part for Class I, Division 2 locations.

* * * * *

10. Section 1910.106 is amended to remove the acronym "NEC" from the boxheads in Tables H–18 and H–19, and paragraph (h)(7)(iii)(*a*) is revised to read as follows:

§ 1910.106 Flammable and combustible liquids.

* * * * *

(h) * * *

(7) * * *

(iii) *Electrical.* (*a*) All electric wiring and equipment shall be installed in accordance with subpart S of this part.

* * * *

§ 1910.110 [Amended]

11. The words "National Electrical Code" are removed from the boxhead in Table H–28 in § 1910.110.

Subpart N—Authority [Amended]

12. The authority citation for subpart N of part 1910 continues to read as follows:

Authority: Secs. 4, 6, 8, Occupational Safety and Health Act of 1970 (29 U.S.C. 653, 655, 657); Secretary of Labor's Order No. 12–71 (36 FR 8754), 8–76 (41 FR 25059), or 9–83 (48 FR 35736), as applicable. Sections 1910.177, 1910.178, 1910.179, 1910.183, 1910.184, 1910.189, and 1910.190 also issued under 29 CFR part 1911.

13. The introductory text of paragraph (c)(2) of § 1910.178 is revised to read as follows:

§ 1910.178 Powered industrial trucks.

* * * * *

(c) * * *

(2) For specific areas of use, see Table N–1 which tabulates the information contained in this section. References are to the corresponding classification as used in subpart S of this part.

* * * * *

14. Paragraph (g)(1)(i) of § 1910.179 is revised to read as follows:

§ 1910.179 Overhead and gantry cranes.

* * * * *

(g) *Electric equipment*—(1) *General.* (i) Wiring and equipment shall comply with subpart S of this part.

* * * * *

15. Paragraph (j) of § 1910.180 is revised to read as follows:

§ 1910.180 Crawler, locomotive, and truck cranes.

* * * * *

(j) *Operations near overhead lines.* For operations near overhead electric lines, see § 1910.333(c)(3).

16. Entire paragraph (j)(5) of § 1910.181 is revised to read as follows:

§ 1910.181 Derricks.

* * * * *

(j) * * *

(5) *Operations near overhead lines.* For operations near overhead electric lines, see § 1910.333(c)(3).

* * * * *

Subpart Q—Authority [Amended]

17. The authority citation for subpart Q of part 1910 continues to read as follows:

Authority: Secs. 4, 6, 8, Occupational Safety and Health Act of 1970 (29 U.S.C. 653, 655, 657); Secretary of Labor's Order No. 12–71 (36 FR 8754), 8–76 (41 FR 25059), 9–83 (48 FR 35736), or 1–90 (55 FR 9033), as applicable; 5 U.S.C. 553; 29 CFR part 1911.

18. Paragraph (f)(4)(iv)(B) of § 1910.252 is revised to read as follows:

§ 1910.252 Welding cutting, and brazing.

(f) * * *

(4) * * *

(iv) * * *

(B) Wiring and electric equipment in compressor or booster pump rooms or enclosures shall conform to the provisions of subpart S of this part for Class I, Division 2 locations.

* * * * *

Subpart R—Authority [Amended]

19. The authority citation for Subpart R of part 1910 is revised to read as follows:

Authority: Secs. 4, 6, 8, Occupational Safety and Health Act of 1970 (29 U.S.C. 653, 655, 657); Secretary of Labor's Order No. 12–71 (36 FR 8754), 8–76 (41 FR 25059), or 9–83 (48 FR 35736), as applicable. Sections 1910.261, 1910.262, 1910.265, 1910.266, 1910.267, 1910.268, 1910.272, 1910.274, and 1910.275 also issued under 29 CFR part 1911.

20. Paragraphs (g)(1)(iv) and (k)(16) of § 1910.261 are revised to read as follows:

§ 1910.261 Pulp, paper, and paperboard mills.

* * * * *

(g) * * *

(1) * * *

(iv) Electric equipment shall be of the explosion-proof type, in accordance with the requirements of subpart S of this part.

* * * * *

(k) * * *

(16) *Grounding.* All calender stacks and spreader bars shall be grounded in accordance with subpart S of this Part as protection against shock induced by static electricity.

* * * * *

§ 1910.265 [Amended]

21. Paragraph (c)(12) of § 1910.265 is removed and reserved.

§ 1910.266 [Amended]

22. Paragraph (c)(6)(xxii) of § 1910.266 is removed.

Subpart S—Authority [Amended]

23. The Authority Citation for subpart S of part 1910 is revised to read as follows:

Authority: Secs. 4, 6, 8, Occupational Safety and Health Act of 1970 (29 U.S.C. 653, 655, 657); Secretary of Labor's Order No. 8–76 (41 FR 25059) or 9–83 (48 FR 35736), as applicable; 29 CFR part 1911.

§ 1910.304 [Amended]

24. Entire paragraph (b)(1) of § 1910.304 is removed and reserved.

25. Sections 1910.331 through 1910.335 are added to Subpart S to read as follows:

Safety-Related Work Practices

§ 1910.331 Scope.

(a) *Covered work by both qualified and unqualified persons.* The provisions of §§ 1910.331 through 1910.335 cover electrical safety-related work practices for both qualified persons (those who have training in avoiding the electrical hazards of working on or near exposed energized parts) and unqualified persons (those with little or no such training) working on, near, or with the following installations:

(1) *Premises wiring.* Installations of electric conductors and equipment within or on buildings or other structures, and on other premises such as yards, carnival, parking, and other lots, and industrial substations;

(2) *Wiring for connection to supply.* Installations of conductors that connect to the supply of electricity; and

(3) *Other wiring.* Installations of other outside conductors on the premises.

(4) *Optical fiber cable.* Installations of optical fiber cable where such installations are made along with electric conductors.

Note: See § 1910.399 for the definition of "qualified person." See § 1910.332 for training requirements that apply to qualified and unqualified persons.

(b) *Other covered work by unqualified persons.* The provisions of §§ 1910.331 through 1910.335 also cover work performed by unqualified persons on, near, or with the installations listed in paragraphs (c)(1) through (c)(4) of this section.

(c) *Excluded work by qualified persons.* The provisions of §§ 1910.331 through 1910.335 do not apply to work performed by qualified persons on or directly associated with the following installations:

(1) *Generation, transmission, and distribution installations.* Installations for the generation, control, transformation, transmission, and distribution of electric energy (including communication and metering) located in buildings used for such purposes or located outdoors.

Note 1: Work on or directly associated with installations of utilization equipment used for purposes other than generating, transmitting, or distributing electric energy (such as installations which are in office buildings, warehouses, garages, machine shops, or recreational buildings, or other utilization installations which are not an integral part of a generating installation, substation, or control center) is covered under paragraph (a)(1) of this section.

Note 2: Work on or directly associated with generation, transmission, or distribution installations includes:

(1) Work performed directly on such installations, such as repairing overhead or underground distribution lines or repairing a feed-water pump for the boiler in a generating plant.

(2) Work directly associated with such installations, such as line-clearance tree trimming and replacing utility poles.

(3) Work on electric utilization circuits in a generating plant provided that:

(A) Such circuits are commingled with installations of power generation equipment or circuits, and

(B) The generation equipment or circuits present greater electrical hazards than those posed by the utilization equipment or circuits (such as exposure to higher voltages or lack of overcurrent protection).

(2) *Communications installations.* Installations of communication equipment to the extent that the work is covered under § 1910.268.

(3) *Installations in vehicles.* Installations in ships, watercraft, railway rolling stock, aircraft, or automotive vehicles other than mobile homes and recreational vehicles.

(4) *Railway installations.* Installations of railways for generation, transformation, transmission, or distribution of power used exclusively for operation of rolling stock or installations of railways used exclusively for signaling and communication purposes.

§ 1910.332 Training.

(a) *Scope.* The training requirements contained in this section apply to employees who face a risk of electric shock that is not reduced to a safe level by the electrical installation requirements of §§ 1910.303 through 1910.308.

Note: Employees in occupations listed in Table S–4 face such a risk and are required to be trained. Other employees who also may reasonably be expected to face a comparable risk of injury due to electric shock or other electrical hazards must also be trained.

(b) *Content of training.* (1) *Practices addressed in this standard.* Employees shall be trained in and familiar with the safety-related work practices required by §§ 1910.331 through 1910.335 that pertain to their respective job assignments.

(2) *Additional requirements for unqualified persons.* Employees who are covered by paragraph (a) of this section but who are not qualified persons shall also be trained in and familiar with any electrically related safety practices not specifically addressed by §§ 1910.331 through 1910.335 but which are necessary for their safety.

(3) *Additional requirements for qualified persons.* Qualified persons (i.e., those permitted to work on or near exposed energized parts) shall, at a minimum, be trained in and familiar with the following:

(i) The skills and techniques necessary to distinguish exposed live parts from other parts of electric equipment,

(ii) The skills and techniques necessary to determine the nominal voltage of exposed live parts, and

(iii) The clearance distances specified in § 1910.333(c) and the corresponding voltages to which the qualified person will be exposed.

Note 1: For the purposes of §§ 1910.331 through 1910.335, a person must have the training required by paragraph (b)(3) of this section in order to be considered a qualified person.

Note 2: Qualified persons whose work on energized equipment involves either direct contact or contact by means of tools or materials must also have the training needed to meet § 1910.333(c)(2).

(c) *Type of training.* The training required by this section shall be of the classroom or on-the-job type. The degree of training provided shall be determined by the risk to the employee.

TABLE S–4.—TYPICAL OCCUPATIONAL CATEGORIES OF EMPLOYEES FACING A HIGHER THAN NORMAL RISK OF ELECTRICAL ACCIDENT

Occupation
Blue collar supervisors.[1]
Electrical and electronic engineers.[1]
Electrical and electronic equipment assemblers.[1]
Electrical and electronic technicians.[1]
Electricians.
Industrial machine operators.[1]
Material handling equipment operators.[1]
Mechanics and repairers.[1]
Painters.[1]
Riggers and roustabouts.[1]
Stationary engineers.[1]
Welders.

[1] Workers in these groups do not need to be trained if their work or the work of those they supervise does not bring them or the employees they supervise close enough to exposed parts of electric circuits operating at 50 volts or more to ground for a hazard to exist.

§ 1910.333 Selection and use of work practices.

(a) *General.* Safety-related work practices shall be employed to prevent electric shock or other injuries resulting from either direct or indirect electrical contacts, when work is performed near or on equipment or circuits which are or may be energized. The specific safety-related work practices shall be

consistent with the nature and extent of the associated electrical hazards.

(1) *Deenergized parts.* Live parts to which an employee may be exposed shall be deenergized before the employee works on or near them, unless the employer can demonstrate that deenergizing introduces additional or increased hazards or is infeasible due to equipment design or operational limitations. Live parts that operate at less than 50 volts to ground need not be deenergized if there will be no increased exposure to electrical burns or to explosion due to electric arcs.

Note 1: Examples of increased or additional hazards include interruption of life support equipment, deactivation of emergency alarm systems, shutdown of hazardous location ventilation equipment, or removal of illumination for an area.

Note 2: Examples of work that may be performed on or near energized circuit parts because of infeasibility due to equipment design or operational limitations include testing of electric circuits that can only be performed with the circuit energized and work on circuits that form an integral part of a continuous industrial process in a chemical plant that would otherwise need to be completely shut down in order to permit work on one circuit or piece of equipment.

Note 3: Work on or near deenergized parts is covered by paragraph (b) of this section.

(2) *Energized parts.* If the exposed live parts are not deenergized (i.e., for reasons of increased or additional hazards or infeasibility), other safety-related work practices shall be used to protect employees who may be exposed to the electrical hazards involved. Such work practices shall protect employees against contact with energized circuit parts directly with any part of their body or indirectly through some other conductive object. The work practices that are used shall be suitable for the conditions under which the work is to be performed and for the voltage level of the exposed electric conductors or circuit parts. Specific work practice requirements are detailed in paragraph (c) of this section.

(b) *Working on or near exposed deenergized parts.* (1) *Application.* This paragraph applies to work on exposed deenergized parts or near enough to them to expose the employee to any electrical hazard they present. Conductors and parts of electric equipment that have been deenergized but have not been locked out or tagged in accordance with paragraph (b) of this section shall be treated as energized parts, and paragraph (c) of this section applies to work on or near them.

(2) *Lockout and tagging.* While any employee is exposed to contact with parts of fixed electric equipment or circuits which have been deenergized, the circuits energizing the parts shall be locked out or tagged or both in accordance with the requirements of this paragraph. The requirements shall be followed in the order in which they are presented (i.e., paragraph (b)(2)(i) first, then paragraph (b)(2)(ii), etc.).

Note 1: As used in this section, fixed equipment refers to equipment fastened in place or connected by permanent wiring methods.

Note 2: Lockout and tagging procedures that comply with paragraphs (c) through (f) of § 1910.147 will also be deemed to comply with paragraph (b)(2) of this section provided that:

(1) The procedures address the electrical safety hazards covered by this Subpart; and

(2) The procedures also incorporate the requirements of paragraphs (b)(2)(iii)(D) and (b)(2)(iv)(B) of this section.

(i) *Procedures.* The employer shall maintain a copy of the procedures outlined in paragraph (b)(2) and shall make it available for inspection by employees and by the Assistant Secretary of Labor and his or her authorized representatives.

Note: The written procedures may be in the form of a copy of paragraph (b) of this section.

(ii) *Deenergizing equipment.* (A) Safe procedures for deenergizing circuits and equipment shall be determined before circuits or equipment are deenergized.

(B) The circuits and equipment to be worked on shall be disconnected from all electric energy sources. Control circuit devices, such as push buttons, selector switches, and interlocks, may not be used as the sole means for deenergizing circuits or equipment. Interlocks for electric equipment may not be used as a substitute for lockout and tagging procedures.

(C) Stored electric energy which might endanger personnel shall be released. Capacitors shall be discharged and high capacitance elements shall be short-circuited and grounded, if the stored electric energy might endanger personnel.

Note: If the capacitors or associated equipment are handled in meeting this requirement, they shall be treated as energized.

(D) Stored non-electrical energy in devices that could reenergize electric circuit parts shall be blocked or relieved to the extent that the circuit parts could not be accidentally energized by the device.

(iii) *Application of locks and tags.* (A) A lock and a tag shall be placed on each disconnecting means used to deenergize circuits and equipment on which work is to be performed, except as provided in paragraphs (b)(2)(iii)(C) and (b)(2)(iii)(E) of this section. The lock shall be attached so as to prevent persons from operating the disconnecting means unless they resort to undue force or the use of tools.

(B) Each tag shall contain a statement prohibiting unauthorized operation of the disconnecting means and removal of the tag.

(C) If a lock cannot be applied, or if the employer can demonstrate that tagging procedures will provide a level of safety equivalent to that obtained by the use of a lock, a tag may be used without a lock.

(D) A tag used without a lock, as permitted by paragraph (b)(2)(iii)(C) of this section, shall be supplemented by at least one additional safety measure that provides a level of safety equivalent to that obtained by the use of a lock. Examples of additional safety measures include the removal of an isolating circuit element, blocking of a controlling switch, or opening of an extra disconnecting device.

(E) A lock may be placed without a tag only under the following conditions:

(*1*) Only one circuit or piece of equipment is deenergized, and

(*2*) The lockout period does not extend beyond the work shift, and

(*3*) Employees exposed to the hazards associated with reenergizing the circuit or equipment are familiar with this procedure.

(iv) Verification of deenergized condition. The requirements of this paragraph shall be met before any circuits or equipment can be considered and worked as deenergized.

(A) A qualified person shall operate the equipment operating controls or otherwise verify that the equipment cannot be restarted.

(B) A qualified person shall use test equipment to test the circuit elements and electrical parts of equipment to which employees will be exposed and shall verify that the circuit elements and equipment parts are deenergized. The test shall also determine if any energized condition exists as a result of inadvertently induced voltage or unrelated voltage backfeed even though specific parts of the circuit have been deenergized and presumed to be safe. If the circuit to be tested is over 600 volts, nominal, the test equipment shall be checked for proper operation immediately before and immediately after this test.

(v) Reenergizing equipment. These requirements shall be met, in the order given, before circuits or equipment are re-energized, even temporarily.

(A) A qualified person shall conduct tests and visual inspections, as

necessary, to verify that all tools, electrical jumpers, shorts, grounds, and other such devices have been removed, so that the circuits and equipment can be safely energized.

(B) Employees exposed to the hazards associated with reenergizing the circuit or equipment shall be warned to stay clear of circuits and equipment.

(C) Each lock and tag shall be removed by the employee who applied it or under his or her direct supervision. However, if this employee is absent from the workplace, then the lock or tag may be removed by a qualified person designated to perform this task provided that:

(*1*) The employer ensures that the employee who applied the lock or tag is not available at the workplace, and

(*2*) The employer ensures that the employee is aware that the lock or tag has been removed before he or she resumes work at that workplace.

(D) There shall be a visual determination that all employees are clear of the circuits and equipment.

(c) *Working on or near exposed energized parts. (1) Application.* This paragraph applies to work performed on exposed live parts (involving either direct contact or contact by means of tools or materials) or near enough to them for employees to be exposed to any hazard they present.

(2) *Work on energized equipment.* Only qualified persons may work on electric circuit parts or equipment that have not been deenergized under the procedures of paragraph (b) of this section. Such persons shall be capable of working safely on energized circuits and shall be familiar with the proper use of special precautionary techniques, personal protective equipment, insulating and shielding materials, and insulated tools.

(3) *Overhead lines.* If work is to be performed near overhead lines, the lines shall be deenergized and grounded, or other protective measures shall be provided before work is started. If the lines are to be deenergized, arrangements shall be made with the person or organization that operates or controls the electric circuits involved to deenergize and ground them. If protective measures are provided such as guarding, isolating, or insulating, these precautions shall prevent employees from contacting such lines directly with any part of their body or indirectly through conductive materials, tools, or equipment.

Note: The work practices used by qualified persons installing insulating devices on overhead power transmission or distribution lines are not covered by §§ 1910.332 through 1910.335. Under paragraph (c)(2) of this section, unqualified persons are prohibited from performing this type of work.

(i) *Unqualified persons.* (A) When an unqualified person is working in an elevated position near overhead lines, the location shall be such that the person and the longest conductive object he or she may contact cannot come closer to any unguarded, energized overhead line than the following distances:

(*1*) For voltages to ground 50kV or below—10 ft. (305 cm);

(*2*) For voltages to ground over 50kV—10 ft. (305 cm) plus 4 in. (10 cm) for every 10kV over 50kV.

(B) When an unqualified person is working on the ground in the vicinity of overhead lines, the person may not bring any conductive object closer to unguarded, energized overhead lines than the distances given in paragraph (c)(3)(i)(A) of this section.

Note: For voltages normally encountered with overhead power lines, objects which do not have an insulating rating for the voltage involved are considered to be conductive.

(ii) *Qualified persons.* When a qualified person is working in the vicinity of overhead lines, whether in an elevated position or on the ground, the person may not approach or take any conductive object without an approved insulating handle closer to exposed energized parts than shown in Table S–5 unless:

(A) The person is insulated from the energized part (gloves, with sleeves if necessary, rated for the voltage involved are considered to be insulation of the person from the energized part on which work is performed), or

(B) The energized part is insulated both from all other conductive objects at a different potential and from the person, or

(C) The person is insulated from all conductive objects at a potential different from that of the energized part.

TABLE S–5.—APPROACH DISTANCES FOR QUALIFIED EMPLOYEES ALTERNATING CURRENT

Voltage range (phase to phase)	Minimum approach distance
300V and less	Avoid contact.
Over 300V, not over 750V.	1 ft. 0 in. (30.5 cm).
Over 750V, not over 2kV	1 ft. 6 in. (46 cm).
Over 2kV, not over 15kV	2 ft. 0 in. (61 cm).
Over 15kV, not over 37kV.	3 ft. 0 in. (91 cm).
Over 37kV, not over 87.5kV.	3 ft. 6 in. (107 cm).
Over 87.5kV, not over 121kV.	4 ft. 0 in. (122 cm).
Over 121kV, not over 140kV.	4 ft. 6 in. (137 cm).

(iii) *Vehicular and mechanical equipment.* (A) Any vehicle or mechanical equipment capable of having parts of its structure elevated near energized overhead lines shall be operated so that a clearance of 10 ft. (305 cm) is maintained. If the voltage is higher than 50kV, the clearance shall be increased 4 in. (10 cm) for every 10kV over that voltage. However, under any of the following conditions, the clearance may be reduced:

(*1*) If the vehicle is in transit with its structure lowered, the clearance may be reduced to 4 ft. (122 cm). If the voltage is higher than 50kV, the clearance shall be increased 4 in. (10 cm) for every 10kV over that voltage.

(*2*) If insulating barriers are installed to prevent contact with the lines, and if the barriers are rated for the voltage of the line being guarded and are not a part of or an attachment to the vehicle or its raised structure, the clearance may be reduced to a distance within the designed working dimensions of the insulating barrier.

(*3*) If the equipment is an aerial lift insulated for the voltage involved, and if the work is performed by a qualified person, the clearance (between the uninsulated portion of the aerial lift and the power line) may be reduced to the distance given in Table S–5.

(B) Employees standing on the ground may not contact the vehicle or mechanical equipment or any of its attachments, unless:

(*1*) The employee is using protective equipment rated for the voltage; or

(*2*) The equipment is located so that no uninsulated part of its structure (that portion of the structure that provides a conductive path to employees on the ground) can come closer to the line than permitted in paragraph (c)(3)(iii) of this section.

(C) If any vehicle or mechanical equipment capable of having parts of its structure elevated near energized overhead lines is intentionally grounded, employees working on the ground near the point of grounding may not stand at the grounding location whenever there is a possibility of overhead line contact. Additional precautions, such as the use of barricades or insulation, shall be taken to protect employees from

hazardous ground potentials, depending on earth resistivity and fault currents, which can develop within the first few feet or more outward from the grounding point.

(4) *Illumination.* (i) Employees may not enter spaces containing exposed energized parts, unless illumination is provided that enables the employees to perform the work safely.

(ii) Where lack of illumination or an obstruction precludes observation of the work to be performed, employees may not perform tasks near exposed energized parts. Employees may not reach blindly into areas which may contain energized parts.

(5) *Confined or enclosed work spaces.* When an employee works in a confined or enclosed space (such as a manhole or vault) that contains exposed energized parts, the employer shall provide, and the employee shall use, protective shields, protective barriers, or insulating materials as necessary to avoid inadvertent contact with these parts. Doors, hinged panels, and the like shall be secured to prevent their swinging into an employee and causing the employee to contact exposed energized parts.

(6) *Conductive materials and equipment.* Conductive materials and equipment that are in contact with any part of an employee's body shall be handled in a manner that will prevent them from contacting exposed energized conductors or circuit parts. If an employee must handle long dimensional conductive objects (such as ducts and pipes) in areas with exposed live parts, the employer shall institute work practices (such as the use of insulation, guarding, and material handling techniques) which will minimize the hazard.

(7) *Portable ladders.* Portable ladders shall have nonconductive siderails if they are used where the employee or the ladder could contact exposed energized parts.

(8) *Conductive apparel.* Conductive articles of jewelry and clothing (such as watch bands, bracelets, rings, key chains, necklaces, metalized aprons, cloth with conductive thread, or metal headgear) may not be worn if they might contact exposed energized parts. However, such articles may be worn if they are rendered nonconductive by covering, wrapping, or other insulating means.

(9) *Housekeeping duties.* Where live parts present an electrical contact hazard, employees may not perform housekeeping duties at such close distances to the parts that there is a possibility of contact, unless adequate safeguards (such as insulating equipment or barriers) are provided. Electrically conductive cleaning materials (including conductive solids such as steel wool, metalized cloth, and silicon carbide, as well as conductive liquid solutions) may not be used in proximity to energized parts unless procedures are followed which will prevent electrical contact.

(10) *Interlocks.* Only a qualified person following the requirements of paragraph (c) of this section may defeat an electrical safety interlock, and then only temporarily while he or she is working on the equipment. The interlock system shall be returned to its operable condition when this work is completed.

§ 1910.334 Use of equipment.

(a) *Portable electric equipment.* This paragraph applies to the use of cord- and plug-connected equipment, including flexible cord sets (extension cords).

(1) *Handling.* Portable equipment shall be handled in a manner which will not cause damage. Flexible electric cords connected to equipment may not be used for raising or lowering the equipment. Flexible cords may not be fastened with staples or otherwise hung in such a fashion as could damage the outer jacket or insulation.

(2) *Visual inspection.* (i) Portable cord- and plug-connected equipment and flexible cord sets (extension cords) shall be visually inspected before use on any shift for external defects (such as loose parts, deformed and missing pins, or damage to outer jacket or insulation) and for evidence of possible internal damage (such as pinched or crushed outer jacket). Cord- and plug-connected equipment and flexible cord sets (extension cords) which remain connected once they are put in place and are not exposed to damage need not be visually inspected until they are relocated.

(ii) If there is a defect or evidence of damage that might expose an employee to injury, the defective or damaged item shall be removed from service, and no employee may use it until necessary repairs and tests to render the equipment safe have been made.

(iii) When an attachment plug is to be connected to a receptacle (including any on a cord set), the relationship of the plug and receptacle contacts shall first be checked to ensure that they are of proper mating configurations.

(3) *Grounding-type equipment.* (i) A flexible cord used with grounding-type equipment shall contain an equipment grounding conductor.

(ii) Attachment plugs and receptacles may not be connected or altered in a manner which would prevent proper continuity of the equipment grounding conductor at the point where plugs are attached to receptacles. Additionally, these devices may not be altered to allow the grounding pole of a plug to be inserted into slots intended for connection to the current-carrying conductors.

(iii) Adapters which interrupt the continuity of the equipment grounding connection may not be used.

(4) *Conductive work locations.* Portable electric equipment and flexible cords used in highly conductive work locations (such as those inundated with water or other conductive liquids), or in job locations where employees are likely to contact water or conductive liquids, shall be approved for those locations.

(5) *Connecting attachment plugs.* (i) Employees' hands may not be wet when plugging and unplugging flexible cords and cord- and plug-connected equipment, if energized equipment is involved.

(ii) Energized plug and receptacle connections may be handled only with insulating protective equipment if the condition of the connection could provide a conducting path to the employee's hand (if, for example, a cord connector is wet from being immersed in water).

(iii) Locking-type connectors shall be properly secured after connection.

(b) *Electric power and lighting circuits.* (1) *Routine opening and closing of circuits.* Load rated switches, circuit breakers, or other devices specifically designed as disconnecting means shall be used for the opening, reversing, or closing of circuits under load conditions. Cable connectors not of the load-break type, fuses, terminal lugs, and cable splice connections may not be used for such purposes, except in an emergency.

(2) *Reclosing circuits after protective device operation.* After a circuit is deenergized by a circuit protective device, the circuit may not be manually reenergized until it has been determined that the equipment and circuit can be safely energized. The repetitive manual reclosing of circuit breakers or reenergizing circuits through replaced fuses is prohibited.

Note: When it can be determined from the design of the circuit and the overcurrent devices involved that the automatic operation of a device was caused by an overload rather than a fault condition, no examination of the circuit or connected equipment is needed before the circuit is reenergized.

(3) *Overcurrent protection modification.* Overcurrent protection of circuits and conductors may not be modified, even on a temporary basis, beyond that allowed by § 1910.304(e),

the installation safety requirements for overcurrent protection.

(c) *Test instruments and equipment.* (1) *Use.* Only qualified persons may perform testing work on electric circuits or equipment.

(2) *Visual inspection.* Test instruments and equipment and all associated test leads, cables, power cords, probes, and connectors shall be visually inspected for external defects and damage before the equipment is used. If there is a defect or evidence of damage that might expose an employee to injury, the defective or damaged item shall be removed from service, and no employee may use it until necessary repairs and tests to render the equipment safe have been made.

(3) *Rating of equipment.* Test instruments and equipment and their accessories shall be rated for the circuits and equipment to which they will be connected and shall be designed for the environment in which they will be used.

(d) *Occasional use of flammable or ignitible materials.* Where flammable materials are present only occasionally, electric equipment capable of igniting them shall not be used, unless measures are taken to prevent hazardous conditions from developing. Such materials include, but are not limited to: flammable gases, vapors, or liquids; combustible dust; and ignitible fibers or flyings.

Note: Electrical installation requirements for locations where flammable materials are present on a regular basis are contained in § 1910.307.

§ 1910.335 Safeguards for personnel protection.

(a) *Use of protective equipment.* (1) *Personal protective equipment.* (i) Employees working in areas where there are potential electrical hazards shall be provided with, and shall use, electrical protective equipment that is appropriate for the specific parts of the body to be protected and for the work to be performed.

Note: Personal protective equipment requirements are contained in subpart I of this part.

(ii) Protective equipment shall be maintained in a safe, reliable condition and shall be periodically inspected or tested, as required by § 1910.137.

(iii) If the insulating capability of protective equipment may be subject to damage during use, the insulating material shall be protected. (For example, an outer covering of leather is sometimes used for the protection of rubber insulating material.)

(iv) Employees shall wear nonconductive head protection wherever there is a danger of head injury from electric shock or burns due to contact with exposed energized parts.

(v) Employees shall wear protective equipment for the eyes or face wherever there is danger of injury to the eyes or face from electric arcs or flashes or from flying objects resulting from electrical explosion.

(2) *General protective equipment and tools.* (i) When working near exposed energized conductors or circuit parts, each employee shall use insulated tools or handling equipment if the tools or handling equipment might make contact with such conductors or parts. If the insulating capability of insulated tools or handling equipment is subject to damage, the insulating material shall be protected.

(A) Fuse handling equipment, insulated for the circuit voltage, shall be used to remove or install fuses when the fuse terminals are energized.

(B) Ropes and handlines used near exposed energized parts shall be nonconductive.

(ii) Protective shields, protective barriers, or insulating materials shall be used to protect each employee from shock, burns, or other electrically related injuries while that employee is working near exposed energized parts which might be accidentally contacted or where dangerous electric heating or arcing might occur. When normally enclosed live parts are exposed for maintenance or repair, they shall be guarded to protect unqualified persons from contact with the live parts.

(b) *Alerting techniques.* The following alerting techniques shall be used to warn and protect employees from hazards which could cause injury due to electric shock, burns, or failure of electric equipment parts:

(1) *Safety signs and tags.* Safety signs, safety symbols, or accident prevention tags shall be used where necessary to warn employees about electrical hazards which may endanger them, as required by § 1910.145.

(2) *Barricades.* Barricades shall be used in conjunction with safety signs where it is necessary to prevent or limit employee access to work areas exposing employees to uninsulated energized conductors or circuit parts. Conductive barricades may not be used where they might cause an electrical contact hazard.

(3) *Attendants.* If signs and barricades do not provide sufficient warning and protection from electrical hazards, an attendant shall be stationed to warn and protect employees.

§ 1910.399 [Amended]

26. The numbered paragraph designations (1) through (137) are removed from the definitions in paragraph (a) of § l910.399.

27. Reserved paragraphs (b), (c), and (d) of § 19l0.399 are removed, and both the paragraph (a) designation and the heading "Definitions applicable to §§ 1910.302 through 1910.330" are removed from paragraph (a) of § 1910.399.

28. A definition of "Line-clearance tree trimming" is added between the definitions of "Lighting outlet" and "Listed"; a definition of "May" is added between the definitions of "Location" and "Medium voltage cable"; and two notes are added to the definition of "Qualified person" in § 1910.399. The new definitions and the notes read as follows:

§ 1910.399 Definitions applicable to this subpart.

* * * * *

Lighting outlet. * * *

Line-clearance tree trimming. The pruning, trimming, repairing, maintaining, removing, or clearing of trees or cutting of brush that is within 10 feet (305 cm) of electric supply lines and equipment.

* * * * *

Location. * * *

May. If a discretionary right, privilege, or power is conferred, the word "may" is used. If a right, privilege, or power is abridged or if an obligation to abstain from acting is imposed, the word "may" is used with a restrictive "no," "not," or "only." (E.g., no employer may . . .; an employer may not . . .; only qualified persons may. . . .)

* * * * *

Qualified person. * * *

Note 1: Whether an employee is considered to be a "qualified person" will depend upon various circumstances in the workplace. It is possible and, in fact, likely for an individual to be considered "qualified" with regard to certain equipment in the workplace, but "unqualified" as to other equipment. (See § 1910.332(b)(3) for training requirements that specifically apply to qualified persons.)

Note 2: An employee who is undergoing on-the-job training and who, in the course of such training, has demonstrated an ability to perform duties safely at his or her level of training and who is under the direct supervision of a qualified person is considered to be a qualified person for the performance of those duties.

* * * * *

[FR Doc. 90–17951 Filed 8–3–90; 8:45 am]

BILLING CODE 4510–26–M

federal register

Monday
August 6, 1990

Part III

Department of Health and Human Services

Office of Refugee Resettlement

Refugee Resettlement Program; Availability of Funding for Formula Grants for FY 1990 Targeted Assistance for Services to Refugees in Local Areas of High Need

DEPARTMENT OF HEALTH AND HUMAN SERVICES

Office of Refugee Resettlement

Refugee Resettlement Program; Availability of Funding for Formula Grants for FY 1990 Targeted Assistance for Services to Refugees [1] in Local Areas of High Need

AGENCY: Office of Refugee Resettlement (ORR), Family Support Administration, Department of Health and Human Services.

ACTION Final notice of availability of funding for formula grants for FY 1990 targeted assistance for services to refugees [1] in local areas of high need.

SUMMARY: This notice announces the availability of funds and award procedures for FY 1990 targeted assistance formula grants for services to refugees under the Refugee Resettlement Program (RRP). These grants are for service provision in localities with large refugee populations, high refugee concentrations, and high use of assistance, and where specific needs exist for supplementation of currently available resources.

A notice of proposed qualification of counties and allocation of funds was published for public comment in the **Federal Register** of April 13, 1990 (55 FR 13974).

No changes have been made in the allocation formula or amounts or in the requirements for the targeted assistance program after consideration of the 13 comments received.

The proposed requirements and allocations of the April 13 notice are therefore made final.

APPLICATION DEADLINE: The deadline for applications from States for grants under this notice is September 5, 1990. Applications must be received on time.

An application will be considered to be received on time under either of the following two circumstances:

A. The application was sent via the U.S. Postal Service or by private commercial carrier not later than 30 days after publication of the final notice unless it arrives too late to be considered by the reviewers. (Applicants are responsible for assuring that the U.S. Postal Service or private commercial carrier dates the application package. Applicants should be aware that not all post offices or private commercial carriers provide a dated postmark unless specifically instructed to do so.)

B. The application is hand-delivered on or before the closing date to the Office of Grants Management, FSA, 6th floor, 901 D Street, SW., Washington, DC 20447. Hand-delivered applications will be accepted during the normal working hours of 8 a.m. to 4:30 p.m., Monday through Friday (excluding Federal legal holidays) up to 4:30 p.m. of the closing date.

Late applications will be returned to the sending agency.

To be considered complete an application package must include a signed original and two copies of Standard Form 424, parts I through IV. The package must also include the following three certifications by the applicant: Drug-Free Workplace, Debarment, and Anti-Lobbying. (We will provide copies of these materials to all targeted assistance States.)

GRANT REGULATIONS: Grants are subject to the administrative regulations published under title 45 of the Code of Federal Regulations, part 74, §§ 74.62(a), 74.174(b), 74.304, 74.710, and 74.715, and part 92.

For further information on application and grant procedures, States should contact: Shirley Parker, Office of Grants Management, Family Support Administration, 370 L'Enfant Promenade, SW., Washington, DC 20447. Telephone (202) 252–4618. *For further programmatic information, States should contact:* Ron Munia, Office of Refugee Resettlement, Family Support Administration, 370 L'Enfant Promenade, SW., Washington, DC 20447. Telephone (202) 252–4559.

SUPPLEMENTARY INFORMATION:

Discussion of Comments Received

Thirteen letters of comment were received in response to the notice of proposed availability of funds for refugee targeted assistance. The comments are summarized below and are followed in each case by the Department's response.

Comment: Most of the commenters expressed views about the proposed allocation formula. Two commenters specifically indicated support for the formula and eight expressed objections.

Two of those objecting to the formula stated that dependency rates for targeted assistance counties, rather than statewide dependency rates, should be used because the local dependency rates are higher. On the other hand, two commenters recommended that dependency rates be given much less weight in determining allocations, and one commenter said that dependency rates should not be used at all in the formula because basing higher allocations on higher dependency rates rewards "unsuccessful programs."

Four commenters considered the formula unsatisfactory because it did not take secondary migration into account.

Two commenters objected to our continuing to use the same criteria in judging the eligibility of new counties. They proposed that additional counties qualify by meeting lower standards of size and concentration of refugee population, number of cash assistance recipients, and dependency rates than were used in the past.

Two commenters objected to the weight given in the formula to refugees who arrived during fiscal years 1980–1982; they recommended that these earlier arrivals be given 25%, rather than 50%, weight in determining allocations.

Response: As the comments indicate, there are opposing views of the factors that should be included in an allocation formula and the weight that they should be given. Given the various approaches reflected in the comments, we believe that the proposed formula, which is a one-year update of the final formula decided upon last year after extensive comment and consideration, represents a reasonable basis for allocating targeted assistance funds. This formula continues to recognize the original impact of refugees and Cuban/Haitian entrants who arrived in fiscal years 1980–1982 which gave rise to the targeted assistance program and at the same time takes into consideration the impact of subsequent arrivals. By updating the formula to include the FY 1989 arrivals, greater weight has been given to the more recent arrivals and proportionately less to the earlier.

We agree that the formula could be improved by the use of data on secondary migration if such data were available. However, data on migration at the county level are not collected and therefore are not available for use in formula allocations. Similarly, county-level dependency rates are not available because their calculation would require such migration data.

[1] In addition to persons admitted to the United States as refugees, eligibility for targeted assistance includes Cuban and Haitian entrants, certain Amerasians from Vietnam who are admitted to the U.S. as immigrants, and certain Amerasians from Vietnam who are U.S. citizens. The term "refugee," used in this notice for convenience, is intended to encompass such additional persons who are eligible to participate in refugee program services, including the targeted assistance program.

Refugees admitted to the U.S. under admissions numbers set aside for private-sector-initiative admissions are not eligible to be served under the targeted assistance program (or under other programs supported by Federal refugee funds) during their period of coverage under their sponsoring agency's agreement with the Department of State—usually two years from their date of arrival.

We disagree with the recommendation that the criteria be lowered in order for additional counties to qualify for the targeted assistance program; we believe that it is appropriate for the available funds to be concentrated in the areas that have experienced the greater impacts.

Comment: One commenter asked whether non-Southeast Asian arrivals have been counted in the formula since 1982, when data were not available on such arrivals.

Response: Arrivals from all parts of the world have been included beginning in 1983.

Comment: Two commenters supported, and four objected to, the requirement, continued from last year's targeted assistance program, that "at least 85% of targeted assistance funds are required to support projects which directly enhance refugee employment potential, have specific employment objectives, and are designed to enable refugees to obtain jobs with less than one year's participation in the targeted assistance program." Objections were that some refugees need long-term services before they can be expected to become employed and that the one-year requirement is inconsistent with the JOBS program for recipients of aid to families with dependent children (AFDC). One commenter stated that refugees "who have spent as long as ten years in camps in Thailand * * * are highly unlikely to become employable within one year of arrival."

The two commenters supporting the one-year limitation expressed different views. One stated, "It has been our experience * * * that it is critical to get refugees a job as quickly as possible after arrival in the U.S.A. so that they do not become entrenched in the welfare system." And the other wrote, "The longer they are on the welfare rolls, the lower the refugees' self-esteem becomes and the harder it is for our programs to convince them that they can do the jobs we have found for them."

Response: The one-year limitation included in the FY 1989 final notice and proposed for continuation in FY 1990 is consistent with earlier targeted assistance announcements but more specific in designating a specific time period.

The wording is not intended to refer to a period of one year after a refugee's arrival in the U.S. but rather to refer to a limitation on the length of training programs provided through targeted assistance funds. Since the targeted assistance program originated in order to address the protracted impact of dependent refugees on localities, we would anticipate that the targeted assistance funding would often be used to address the needs of longer term assistance recipients who had previously received substantial English language training and other services but may need up to an additional year in order to become employed.

Targeted assistance guidelines have consistently reflected the emphasis of refugee program legislation on early employment and have prescribed time-limited service strategies intended to place refugees in jobs as quickly as possible. Earlier announcements required performance measures of job placements and job retention at six months for each service component.

A need for more flexibility in service strategies was recognized beginning with the FY 1984 targeted assistance program when the Department departed from strictly employment-related services and allowed 15% of the total funds awarded to be used to meet non-employment-related critical unmet needs. Use of the 15% funding for critical unmet needs continues to be allowed in county plans, subject to State approval and, in the case of State-administered programs, to ORR approval. In the event that the State wishes to support a local area's request to allocate more than 15% of its funds for services not intended to lead to employment within a year, the State must seek formal approval from ORR.

As a result of the comments received on the FY 1989 proposal, the Department reviewed the proposed wording with respect to the scope of services permissible for support within the 85% of funding which must be used for high-priority, employment-related services, and we modified the announcement to allow certain basic educational training activities when they can be appropriately provided within the context of an individual employability plan for a refugee which is intended to result in job placement in less than one year.

ORR recognizes the differences between the targeted assistance program and the Federal JOBS program. Such differences are to be expected given the different focus of the respective programs. The JOBS program is designed for AFDC recipients and is not refugee specific. In all likelihood, only a limited amount of locally available resources will be devoted to addressing the unique needs of the refugee population. While many refugees will presumably participate in the JOBS program, there still remains a critical need for refugee-specific services with the current targeted assistance focus.

We continue to recognize that long-term education and training may be desirable for many refugees as they progress in building their lives in the United States, but we believe that such long-term activities are beyond the legislated intent, scope, and funding of the refugee program which provides transitional help aimed at job placement.

Comment: One commenter opposed continuing to allow a State which has more than one targeted assistance county the option of determining local country allocations within the State.

Response: The authority to allow States to allocate targeted assistance funds among counties was granted to the States in the FY 1986 program and has been continued since. The Department continues to believe that States, as grantees charged with overall management of the program, should have the flexibility to respond to varying degrees of need among targeted assistance communities within a particular State.

The respective county allocations which the formula yields provide an objective basis for awarding funds. However, the specific impacts and relative needs for funds among the targeted assistance communities within a State may vary for a variety of local reasons which cannot reasonably be addressed in a formula-based allocation of funds across the country.

It should be noted that if a State should propose to allocate funds among its targeted assistance counties differently from the allocations contained in this announcement, such a proposal continues to be subject ORR approval.

Comment: Five commenters objected to the separate award of $14,000,000 to Florida for the Dade County public schools and Jackson Memorial Hospital in Miami, and four commenters objected to our using 10% of the targeted assistance appropriation for a separate program of competitive grant awards for localities most heavily impacted by the influx of refugees such as Laotian Hmong and Cambodians, to assist local schools, hospitals, employment services, and other institutions.

Response: The use of funds for these purposes reflects Congressional intent expressed in the Conference Report on appropriations.

Comment: One commenter asked whether the arrivals counted in the formula included persons whose status was adjusted under section 599D of the FY 1990 Foreign Operations Appropriations Act (Pub. L. 101–167).

Response: Section 599D provides for certain categories of aliens who were denied refugee status to reapply and to have their applications determined taking into account the provisions of this section; if such persons are subsequently accorded refugee status, they are counted as refugee admissions. Section 599E provides for the adjustment of status of certain Soviet and Indochinese refugees; these persons have not been counted in the formula since adjustments of status under section 599E are from parolee to permanent resident alien, with the individual never having been accorded an immigration status necessary for participation in the refugee program.

Dated: July 31, 1990.

Chris Gersten,

Director, Office of Refugee Resettlement.

[FR Doc. 90-18195 Filed 8-3-90; 8:45 am]

BILLING CODE 4150-04-M

federal register

Monday
August 6, 1990

Part IV

Department of Energy

Federal Energy Regulatory Commission

18 CFR Part 270

Establishment of Deadlines for First Sellers To Make and Report BTU Refunds; Final Rule and Notice

DEPARTMENT OF ENERGY

Federal Energy Regulatory Commission

18 CFR Part 270

[Docket No. RM89-6-002; Order No. 515-B]

Establishment of Deadlines for First Sellers To Make and Report Refunds; Clarification Order

July 27, 1990.

AGENCY: Federal Energy Regulatory Commission, DOE.

ACTION: Final rule; clarification order.

SUMMARY: The Federal Energy Regulatory Commission is clarifying that the amended procedures under § 270.101 of the Commission's regulations which permit billing adjustments to recover refunds, are applicable to Btu refunds that are due. The action is necessary because it appears that pipelines that are owed Btu refunds may believe that the prohibition against unilateral billing adjustments in Order No. 399 prevents the application of the amended regulations to such refunds.

EFFECTIVE DATE: July 27, 1990.

FOR FURTHER INFORMATION CONTACT: Jacob Silverman, Office of the General Counsel, Federal Energy Regulatory Commission, 825 North Capitol Street NE., Washington, DC 20426, (202) 208-2078.

SUPPLEMENTARY INFORMATION: In addition to publishing the full text of this document in the **Federal Register**, the Commission also provides all interested persons an opportunity to inspect or copy the contents of this document during normal business hours in room 3308, 941 North Capitol Street NE., Washington, DC 20426.

The Commission Issuance Posting Systems (CIPS), an electronic bulletin board service, provides access to the texts of formal documents issued by the Commission. CIPS is available at no charge to the user and may be accessed using a personal computer with a modem by dialing (202) 208-1397. To access CIPS, set your communications software to use 300, 1200 or 2400 baud, full duplex, no parity, 8 data bits, and 1 stop bit. The full text of this order on rehearing will be available on CIPS for 30 days from the date of issuance. The computer text on diskette in WordPerfect formal may also be purchased from the Commission's copy contractor, La Dorn Systems Corporation, also located in Room 3308, 941 North Capitol Street NE., Washington, DC 20426.

Before Commissioners: Martin L. Allday, Chairman; Charles A. Trabandt, Elizabeth Anne Moler and Jerry J. Langdon.

I. Introduction

The Federal Energy Regulatory Commission (Commission) is clarifying that the billing adjustment mechanism under amended § 270.101(e) of the Commission's regulations is applicable to recover Btu refunds from first sellers that are due and outstanding.

II. Background

In response to an audit report by the Office of the Inspector General, United States Department of Energy, which concluded that first sellers did not make timely refunds because of the lack of any specific time limit to make the refund under the general refund obligation provision in § 270.101(e) [1] which merely required that the refund be made "promptly", and the lack of penalty action for late refunds, the Commission issued Order Nos. 515 [2] and 515-A [3], which amended § 270.101(e).

As amended that section now requires first sellers to make refunds of overcollections or unauthorized collections within 120 days of being notified of a refund obligation.[4] If the seller fails to make payment within that time, the purchaser can unilaterally recoup the refund through billing adjustments, provided it gives the first seller written notice of the amount of the refund to be recovered and the period during which the billing adjustment will be completed (which may be a reasonable period not to exceed one year). However, § 270.101(e)(2)(ii) provides that if a first seller files an appeal, complaint, or protest with the Commission disputing that the refund obligation exists as claimed, the purchaser may not use billing adjustments until the Commission issues a final order on the appeal, complaint, or protest.

III. Discussion

The deadline has long since passed for first sellers to make the Btu refunds directed by the Commission in Order Nos. 399, *et seq.*[5] following the court's decision in *Interstate Natural Gas Association of America* v. *FERC.*[6] Commission staff has become aware that some Btu refunds are still outstanding even where the purchaser owed the refund is continuing to purchase and pay for gas from the first seller who owes the Btu refund. In 1984, when the Commission issued Order No. 399, it was concerned that unilateral billing adjustments by pipelines might cause serious cash flow problems to producers, and accordingly allowed first sellers latitude in making the refund payments. Thus Order No. 399 specifically stated that pipelines would not be permitted to unilaterally withhold payments to first sellers to recover refunds due. However, the order did permit billing adjustments by mutual agreement.[7]

It appears that pipelines are not using the billing adjustment mechanism under amended § 270.101(e) to recoup Btu refunds from first sellers from whom they are presently buying gas because the pipelines may believe that the prohibition against unilateral billing adjustments in Order No. 399 is applicable to such refunds.

Since the Btu refunds are long overdue, and amended § 270.101(e)(2)(ii) provides that unilateral billing adjustments cannot be made if there is any dispute whether the refund is due, this order clarifies that § 270.101 can be utilized to recover Btu refunds that are due. Accordingly, the Commission clarifies that § 270.101 is applicable to Btu refunds due and owing.

The Commission clarifies that purchasers may use the billing adjustment mechanism in § 270.101 of the regulations to recover Btu refunds from first sellers after giving written notice under § 270.101(e)(1)(i) that such refund is due, and if payment is not made within 120 days, written notice required under § 270.101(e)(2)(i) that the purchaser intends to use a billing adjustment to recover the refund, the amount of the refund and the period during which the billing adjustment will be completed, unless the first seller has filed, or files, a complaint or protest with the Commission. Purchasers may not implement unilateral billing adjustments

---

[1] Section 270.101(e) applies to all refund obligations other than interim collections made under part 273 of the Commission's regulations. *See* 18 CFR 270.101(e) (1989).

[2] 54 FR 32,805 (Aug. 10, 1989), II FERC Stats. and Regs., ¶ 30,859 (Aug. 3, 1989).

[3] 55 FR 20 (Jan. 2, 1990), II FERC Stats. and Regs., ¶ 30,870 (Dec. 15, 1989).

[4] The regulations were also amended to require first sellers to file refund reports with the Commission within 150 days after being notified that a refund is due.

[5] Order No. 399, 49 FR 37,735 (Sept. 26, 1984), FERC Stats. & Regs. [Regulations Preambles 1982-1985] ¶ 30,597 (Sept. 20, 1984); Order No. 399-A, 49 FR 46,353 (Nov. 26, 1984), FERC Stats. & Regs. [Regulations Preambles 1982-1985] ¶ 30,612 (Nov. 20, 1984); Order No. 399-B, 50 FR 30,141 (July 24, 1985), FERC Stats. & Regs. [Regulations Preambles 1982-1985] ¶ 30,651 (July 18, 1985).

[6] 716 F.2d 1 (D.C. Cir. 1983), *cert. denied*, 465 U.S. 1108 (1984). All Btu refunds were to be paid no later than November 5, 1986.

[7] FERC Stats. & Regs. (Regulations Preambles 1982-1985) ¶ 30,597 at 31,146.

to recover Btu refunds where first sellers have advised the Commission that the refund obligation is disputed until issuance of a final Commission order on the dispute.

By the Commission.

Lois D. Cashell,

Secretary.

[FR Doc. 90–18214 Filed 8–3–90; 8:45 am]

BILLING CODE 6717–01–M

DEPARTMENT OF ENERGY

Federal Energy Regulatory Commission

Refunds Resulting From Btu Measurement Adjustments; Proposed Commission Action

[Docket No. RM84-6-035]

Issued July 27, 1990.

AGENCY: Federal Energy Regulatory Commission.

ACTION: Notice.

SUMMARY: The Federal Energy Regulatory Commission (Commission) intends to cease its follow-up efforts to recover certain Btu refunds due and owing by certain first sellers because (1) The first sellers cannot be located and it is unlikely that any further efforts will result in the recovery of any refunds, or (2) the first seller has filed proceedings under the Bankruptcy Code and recovery of the Btu refund is unlikely and/or Btu refund involves a *de minimis* amount. The Commission action, however, does not waive the Btu refund which may be pursued later as circumstances warrant.

FOR FURTHER INFORMATION CONTACT: Jacob Silverman, Office of the General Counsel, Federal Energy Regulatory Commission, 825 North Capitol Street, NE., Washington, DC 20426, (202) 208–2078.

SUPPLEMENTARY INFORMATION: In addition, to publishing the full text of this document in the **Federal Register**, the Commission also provides all interested persons an opportunity to inspect or copy the contents of this document during normal business hours in Room 3308, 941 North Capitol Street, NE., Washington, DC 20426.

The Commission Issuance Posting Systems (CIPS), an electronic bulletin board service, provides access to the texts of formal documents issued by the Commission. CIPS is available at no charge to the user and may be accessed using a personal computer with a modem by dialing (202) 208–1397. To access CIPS, set your communications software to use 300, 1200 or 2400 baud, full duplex, no parity, 8 data bits, and 1 stop bit. The full test of this order on rehearing will be available on CIPS for 30 days from the date of issuance. The computer text on diskette in WordPerfect format may also be purchased from the Commission's copy contractor, La Dorn Systems Corporation, also located in Room 3308, 941 North Capitol Street, NE, Washington, DC 20426.

Take notice that for the reasons set forth below the Federal Energy Regulatory Commission (Commission) intends to cease its follow-up collection efforts to recover Btu refunds which are due in 243 cases because (1) The first sellers cannot be located and it is unlikely that any further efforts will result in the recovery of any refunds, or (2) the first seller has filed proceedings under the Bankruptcy Code and recovery of the Btu refund is unlikely and/or the Btu refund involves a *de minimis* amount.[1] The Commission emphasizes, however, that it is not waiving or extinguishing the Btu refund obligation and the Commission's staff will maintain records so that the cases may be reactivated in the event a first seller is subsequently located.

Background

In 1983, the United States Court of Appeals for the District of Columbia Circuit vacated the Commission's regulation which permitted first sellers to measure the Btu content of natural gas based on the condition of the gas as actually delivered ("the "dry rule") and required maximum lawful prices under the Natural Gas Policy Act of 1978 (NGPA) to be calculated by measuring Btu's under the "wet" rule which had been in effect under the Natural Gas Act.[2]

In Order No. 399, *et seq.*[3], which implemented the court's decision, the Commission required first sellers to refund by November 5, 1986 all overcharges which resulted from the use of the dry rule in calculating the Btu content of gas.[4] In addition, the Commission required interstate and intrastate pipelines to file reports identifying first sellers who had not paid their Btu refunds. The Commission also required interstate pipelines to flow the Btu refunds through to its customers.[5]

In excess of $1 billion has been refunded as a result of Order Nos. 399, *et seq.* The pipelines' Order No. 399 [6] reports, however, initially showed 5,610 cases totalling over $140,000,000 where Btu refunds had not been paid. The Commission's staff has actively pursued payment of outstanding Btu refund obligations and has sent over 3,000 letters directing payment of Btu refunds. As of July 1, 1990, staff's efforts have reduced the number of pending Btu refund cases to 1,256 and the total of the unpaid refunds to approximately $31.4 million.

Cases Where First Sellers Cannot Be Located

Despite many efforts, staff has been unable to locate the first seller in 177 cases. In these cases, staff sent letters to addresses obtained from the Energy Information Administration buyer/seller system, the Commission's records, or the pipeline reporting the defaulting first seller. Staff also sent to 31 of the largest interstate and intrastate pipelines a list of approximately 350 first sellers for whom staff was unable to locate a current address and requested them to provide any addresses they might have. Upon receipt of a response from the pipelines, staff sent letters to every address the pipelines furnished.[7] When letters were returned as undeliverable, staff telephoned directory assistance at the area code of the last known address for each first seller to determine if a telephone number could be found, reviewed Commission library reference books for addresses, and again telephoned the pipeline company that had reported that the first seller had not complied with Order No. 399, *et seq.* If another address was found, the letter was redirected to that address. In all instances where a letter has been sent to a first seller listed in the Appendix it has been returned to the Commission.[8]

The refund obligation of the 177 cases where the first seller cannot be located totals approximately $1.4 million.[9] The

[1] The names of these first sellers are set forth on the appendix. Since some first sellers sold gas to more than one pipeline, the number of first sellers is less than the number of cases.

[2] Interstate Natural Gas Association of America v. FERC, 716 F.2d 1 (D.C. Cir. 1983), *cert. denied*, 465 U.S. 1108 (1984).

[3] Order No. 399, 39 FR 37,735 (Sept. 26, 1984), FERC Stats. & Regs. [Regulations Preambles 1982–1985] ¶ 30,597 (Sept. 20, 1984); Order No. 399–A, 49 FR 46,353 (Nov. 26, 1984), FERC Stats. & Regs. [Regulations Preambles 1982–1985] ¶ 30,612 (Nov. 20, 1984); Order No. 399–B, 50 FR 30,141 (July 24, 1985), FERC Stats. & Regs. [Regulation Preambles 1982–1985] ¶ 30,651 (July 18, 1985).

[4] Btu refunds generally were required for sales made from December 1, 1978 until September 1983.

[5] The Commission did not impose that condition on intrastate pipelines receiving the refunds. Where a state regulatory agency regulates the intrastate pipelines within its juristiction, it may determine the disposition of Btu refunds received by those pipelines.

[6] The order required pipelines to file reports by December 18, 1984, June 17, 1985, and January 5, 1987.

[7] The pipeline responses included disclaimers as to whether the addresses are current, provided multiple addresses for the same seller from different pipelines, and included addresses that proved undeliverable to the pipelines.

[8] Staff explored utilizing the letter forwarding resources of the Internal Revenue Service but determined it could not be used because a prerequisite for this service is a Taxpayer Identification Number. Such information is not contained in Commission records.

[9] Included in the 177 cases where the first seller cannot be located are 38 instances where the first seller has filed for bankruptcy under Chapter 11 of

Continued

average refund obligation is $7,900. Of the 177 cases, only three involve a refund of more than $50,000, the largest being $85,000; 37 range between $10,000 and 50,000, and the remaining 137 cases are less than $10,000.

The Commission believes that staff has exhausted every reasonable avenue to locate these 177 first sellers and that it is unlikely that any further resources expended on this effort will result in the payment of any refunds. The Commission intends to cease follow-up efforts in these cases. Each case will remain in a database, however, and will be reactivated if the first seller is subsequently located. The Commission emphasizes, however, that the refund obligation is not being waived or extinguished, and if the first seller is located the Commission will pursue payment if circumstances warrant. The Commission retains any and all legal rights and remedies to pursue and collect these monies if the first seller is located.

Cases Involving First Sellers Who Filed for Bankruptcy Under Chapter 7 of the Bankruptcy Code [10]

Commission staff has conducted a telephone survey of Btu refund cases where bankruptcy of the first seller had been indicated as the reason for nonpayment. Staff called purchasers, first sellers and/or first sellers' representatives to request information on the type of bankruptcy proceeding (chapter 7 or 11), the status of the proceeding and whether the purchaser in each case had filed a claim regarding Btu refunds.

Based upon the information furnished, staff has identified 38 cases where the first seller filed for bankruptcy under chapter 7 and the company has been dissolved and ceased operations. The Commission believes that it is not appropriate to continue to expend Commission resources to attempt to recover the Btu refund in these 38 cases because the companies have been dissolved. The refund obligations in these 38 cases total $554,402 and range from $319 to $68,785. [11]

Cases Involving First Sellers Who Filed for Bankruptcy Under Chapter 11 of the Bankruptcy Code and Whose Btu Refund Obligations Do Not Exceed $2,000

Commission staff has determined that 28 first sellers owe less than $2,000 in Btu refunds and each has filed for bankruptcy under Chapter 11 of the Bankruptcy Code. Because of the minimal amount involved in each of these cases, the Commission believes that it is unwarranted to continue to expend Commission resources to determine the status of these bankruptcy proceedings or to attempt to recover the Btu refund. The refund obligations in these cases totals $25,961 and the refunds involved range from $112 to $1,949.[12]

In consideration of the foregoing, the Commission takes the action as set forth above.

By direction of the Commission.

Lois D. Cashell,

Secretary.

Appendix

3–J Enterprises
AR Archer Jr.
A–G Systems Inc.
Abco Energy Corp.
Aegean Oil
Agoil Inc.
Allen Petroleum Inc.
Alpha Energy Corp.
American Energy Association
American Energy Corp.
Ampeco 1979–3 Drilling Program
Arden Drilling Co.
Armada Resources Inc.
Arvid E. Kallen Jr.
Avoca Petroleum Corp.
B & P Oil Co.
Balco Energy Corp.
Bar M Petroleum Co. Inc.
Bar-Mar Oil Ltd.
Barclays Bank International, Ltd.
Berge Exploration
Billy Vining, U.S. Trustee for Bethlan Prod. Corp.
Bluebell Oil & Gas Inc.
Bruner Oil & Gas Co.
Bucheye Petroleum
Busch Well Service
C.W. Riggs Inc.
Camio Oil Co.
Canus Petroleum Inc.
Canyon Plateau Partnership
Cavalier Gas Corp.
Centerre
Chetopa Bank & Trust for Phoenix Gas
Chivas Petroleum Inc.
Chloe Johnson
Clark Exploration
Clover Energy Corp.
Continental Resources Corp.
Cougar Petroleum
Crawford Energy
Culpepper Oil Co.
D.J.F. Petroleum Corp.
D.O. Little
Dabney Engineering
David W. Wallace for Geochemical Surveys, Inc.
Dixie-Shamrock Oil & Gas Inc.
Donald D. Ash
Donald Peterson 81–192–00
Doyle T. Grogan
E.B. Hailey Operations Inc.
Eaton Energy Co. Inc.
Egan Resources Inc.
Egret Energy
Energetics Operating Co.
Epic Energy Corp.
First Matagorda Corp.
First Nat'l Bnk of Winfie A/C Colonial Corp.
First National Bank of Carthage
Fisher-Webb Inc.
French & Associates Inc.
Gage and Co.
Gene Howard for Samantha Petroleum Corp.
Genesis Petroleum Corp.
George Cameron Inc.
George Rodman Inc.
Gibbon Neal & Edmundson
GO Distributing Investors
Great Basin Petroleum Co.
Hanover Mgt.
Harold Slama
Holt Oil
Homer L Garton
Iona V. Youk, Exec. for estate of Elizabeth Amelia Steward Oyer
J.B. Resources
J. Fitzgerald
J.H. Johnson
Jackie R. Horn
James Mills
Jefferson Energy Co. Inc.
John Deeter
Kanokla Energy Corp.
Ken Sanders
Kenergy Petroleum
Kyle/Peterman Management Corp.
Laredo Exploration Inc.
Latham Expl Co. Inc.
League Oil & Gas Co.
Lewis Chandler and Bert Chenault Trust, R. L. Chandler Trust
Lewis Energy Corp.
Littell Petroleum Corp.
Lomax Exploration
Lone Star Natural Resources
Louisiana Crude Oil & Gas Co.
Love & Assoc. Kansas Gas Inc.

[11] The dollar range in these cases is as follows:

Dollar range	No. of cases	Refund obligation
$50,001 to $70,000	3	$174,246
30,001 to 50,000	5	183,276
10,001 to 30,000	8	133,461
0 to 10,000	22	43,419

[12] The dollar range in these cases is an follows:

Dollar range	No. of cases	Refund obligation
$1,000 to $2,000	12	$18,477
500 to 999	6	4,736
0 to 499	10	2,748

the Bankruptcy Code. In a number of these cases staff has been advised that the bankruptcy trustee has sold all assets and that the company is no longer in existence.

[10] Chapter 7 provides for the liquidation of the bankrupt, and is referred to as "straight bankruptcy." Its purpose is to achieve a fair distribution to creditors of all the non-exempt property of the bankrupt. Chapter 11 is a unified set of provisions for all kinds of "Reorganization," usually for debtors engaged in business, including individuals, partnerships, and corporations. Its goal is to rehabilitate a business as a going concern rather than to liquidate as under chapter 7.

Madera Royalty & Energy Inc./Manilla Pipeline
Madison Drilling
Madison Resources Co.
Manf. Hanover Trust for a Permeator Corp.
Mann Rankin
Matrix Energy Inc.
Mbank Dallas N A A/C Tomlinson Interests Inc.
McMurrey Petroleum Inc.
Mid-Continent Supply Co.
National Gathering Systems Inc.
Nebo Oil Co.
Nelson Petroleum Co.
Norman L. Nelson
Norton Perry
Norton R. Perry
Ohio Oil Gathering Corp.
Oklahoma Operating
Oklahoma Resource Equitie
Olmos Resources Corp. Ltd.
Omega Minerals
Palmer Oil & Gas Co.
Patterson Resources Inc.
Pecos Gathering
Peerless Drilling Co.
Peter Zabel
Petrochalk Corp.
Petroleum Associates Fund Inc. as Agent
Petroleum Corp. of Texas
Pinion Oil Co. Inc.
Prime Energy Co.
Pringle Petroleum Inc.
Prudential Energy Co.
Pyron Exploration & Drilling
Quest Oil Co.
R.H. Operating
Raider Oil Corp.
Ralph Curton, Jr. Trust
Reita Production Co.
Reserve Energy
Robert Ralston
Rod Energy Inc.
S & B Enterprises
Sag Energy Co.
Saluria Operating Co.
Santana Exploration Co.
Seamus Pinion
Sed Inc.
Shanley-Petrogas Inc. c/o Rockwood Resources
Shawnee Hills Gas Gathering Co.
Sheridon Oil
Sinton Gas Gathering
Sioux International Corp.
Sioux Natural Gas Corp.
Solomon Abdo
Soltex Oil & Gas Inc.
Sotrana-Texas Corp.
South Liberty Gas Transportation
Standard Enterprises Co. Alabama
Standard Operating Co.
Steele Petroleum Co.
Stroube Production Co.
Sunnybrook Oil & Gas
Swadco Corp.
Taurus Petroleum
Ted True Inc.
Texas Energy Exploration
Texcan Resources Corp.
Texco Oil & Gas
Texian Oil Corp.
Texoma Petroleum Co.
Texoma Resources Inc.
The Harlow Corp.
Thomas Turman
Tierra 80–2 Limited
Tower Oil & Gas Co.
Tower Oil & Gas Inc.
Trans-Canadian Enterp. of Texas
Trans-Western Exploration
Transgas Co.
Turk Kehl & Associates
Union Dominion
United Energy
United NM Trust (34130.01)
Uranus Geo Co.
Utica National Bank & Trust of Tulsa A/C Earth Energy
Varn Petroleum
Verdigris Gathering System
Vestoil Inc.
Vining Billy R.
Voyager Petroleums Inc.
Vulcan Energy Corp.
W.H. Kimball
Wallace Oil & Gas Inc.
Walter Kellog (Ark)
Warrior Management Co.
W.C. Mills & Eva D. Mills
Weco Oil & Gas Inc.
Westchase Petroleum Corp.
Western Energy Resources Inc.
Western Hills Oil & Gas
Western Wells Co.
William Keele,
William M. Hazard
X–O Exploration

[FR Doc. 90–18215 Filed 8–3–90; 8:45 am]
BILLING CODE 6717–01–M

federal register

Monday
August 6, 1990

Part V

Department of Transportation

Coast Guard

33 CFR Parts 175 and 181

Equipment Requirements for Recreational Boats; Personal Flotation Devices; Final Rule

DEPARTMENT OF TRANSPORTATION

Coast Guard

33 CFR Parts 175 and 181

[CGD 81-023]

RIN 2115-AA58

Equipment Requirements for Recreational Boats; Personal Flotation Devices

AGENCY: Coast Guard, DOT.

ACTION: Final rule.

SUMMARY: The Coast Guard is revising and updating the requirements for personal flotation device (PFD) pamphlets. This rule incorporates by reference the PFD pamphlet design and packaging requirements in Underwriters Laboratories Standard for Marine Buoyant Devices (UL 1123). This rulemaking will result in improved PFD pamphlets which will increase boater awareness and use of PFDs. This rule also revises other PFD related sections to reflect approval of special purpose Type V PFDs, and remove an obsolete exemption from PFD carriage requirements.

DATES: This rule is effective on February 4, 1991. The Director of the Federal Register approves as of February 4, 1991 the incorporation by reference of certain publications listed in the regulations.

ADDRESSES: The Executive Secretary, Marine Safety Council, maintains the public docket for this rulemaking. Comments and supporting documents have been made part of this docket and are available for inspection or copying at the office of the Executive Secretary, Marine Safety Council (G-LRA-2/3406), U.S. Coast Guard, 2100 Second Street SW., Washington, DC 20593-0001, Room 3406 between 8 a.m. and 3 p.m., Monday through Friday, except Federal holidays.

FOR FURTHER INFORMATION CONTACT: Carlton Perry, Auxiliary, Boating, and Consumer Affairs Division, (202) 267-0979.

SUPPLEMENTARY INFORMATION: On November 20, 1989, the Coast Guard published a supplemental notice of proposed rulemaking (SNPRM) entitled Equipment Requirement for Recreational Boats; Personal Flotation Devices in the **Federal Register** (54 FR 47995). The Coast Guard received one letter commenting on the proposal. A public hearing was not requested and one was not held.

Drafting Information

The principal person involved in drafting this document are Carlton Perry, Project Manager, and Christena Green, Project Counsel, Office of Chief Counsel.

Background and Purpose

The Coast Guard published a notice of proposed rulemaking (NPRM) in the **Federal Register** on April 12, 1982 (47 FR 15606). That notice proposed to revoke an obsolete exception to PFD carriage requirements in effect for certain kayaks or canoes before October 1, 1977. It also proposed a number of editorial changes, including a revision of specified text for PFD pamphlets. Interested persons were given until June 11, 1982, to submit comments. No public hearing was held. A total of 3 comments were received in response to the NPRM. The comments came from a State boating law administrator, a PFD manufacturer, and Underwriters Laboratories.

In considering extensive technical comments from the PFD manufacturer and Underwriters Laboratories, the Coast Guard worked with the National Boating Safety Advisory Council (NBSAC), Underwriters Laboratories (UL), and PFD manufacturers to develop improved text, illustrations and presentations. In November 1985, NBSAC endorsed development of a PFD pamphlet standard which could be incorporated by reference, rather than specifying text in Title 33 of the Code of Federal Regulations.

Since then, a number of PFD manufacturers worked with the Coast Guard and Underwriters Laboratories (UL) to develop an improved PFD information pamphlet. A public meeting (51 FR 3807; January 30, 1986) was held on March 7, 1986, in Tampa, Florida, to discuss revising the required PFD pamphlet text. UL 1123 was published on August 22, 1988, and became effective on March 1, 1989. The PFD pamphlet text and illustration requirements in UL 1123 provide the same type of information as currently required in 33 CFR 181.705, with updated technical performance information and an improved format more likely to be read and understood by the PFD purchaser. The PFD pamphlet packaging requirements in UL 1123 provide the same access to the PFD pamphlet by the purchaser as currently required in 33 CFR 181.703. The UL 1123 standard requires all manufacturers of PFDs using UL for PFD inspection (subscribers to UL's Listing Service for Marine Buoyant Devices) to provide with each PFD a pamphlet meeting the text and illustration requirements of UL 1123.

Because the pamphlet text and illustration requirements of UL 1123 contained all revisions proposed in the April 12, 1982 (47 FR 15606) NPRM, the Coast Guard published an SNPRM (54 FR 47995; November 20, 1989) proposing to incorporate by reference the PFD pamphlet text and illustration requirements in UL 1123, 5th edition, rather than revising existing text and illustration requirements. This incorporation by reference would extend PFD pamphlet text and illustration requirements of UL 1123 to all PFD manufacturers.

To relieve manufacturers from having to provide both a UL 1123 and a USCG pamphlet with each PFD during the rulemaking process, the Coast Guard published an exemption from the requirements of 33 CFR 181.703 and 181.705 (54 FR 7763; February 23, 1989) for any PFD manufacturer complying with the PFD pamphlet requirements of UL 1123. The exemption became effective February 23, 1989, and is terminated on February 4, 1991.

Discussion of Comments

The Coast Guard received one comment from Consumer's Union in response to the SNPRM that raised the following issues.

PFD Color. The comment suggested all PFDs should have a highly visible color, not just Type I or certain Type V PFDs. A highly visible color would enhance discovery and rescue, even in calm, inland water and help reduce the chance of a person in the water being run over by other boats in the vicinity.

The color of PFDs is beyond the scope of this rulemaking. However, the Coast Guard is initiating a study of the need for more highly visible colors on PFDs. A separate rulemaking will be initiated in the future, if the study results indicate a benefit to boaters from PFD color restrictions.

TYPE III PFD Disadvantage Caution. The comment also emphasized the importance of the disadvantage caution on the cover of the sample PFD pamphlet, "will not hold the face of an unconscious wearer clear of the water," and recommended it be repeated on page 4 of the Type III PFD pamphlet.

The Coast Guard believes that the current presentation in UL 1123 of advantages and disadvantages for all types of PFDs reflects a proper balance between the pros and cons on both the cover and interior of the pamphlets for various PFD Types, in order to get a sense of how the PFD Types compare to one another. Adding the disadvantage statement to page 4 of the pamphlet would create an imbalance in the discussion on the pamphlet interior pages, and make the Type III appear to be less helpful. Further, the performance characteristics of each PFD Type are explained in more detail on the

respective pamphlet covers than on the interior pages. The Coast Guard does not adopt this suggested change to the rulemaking.

PFD Pamphlet Illustrations. The comment further suggested that the illustrations of a boat at rest on page 7 and an unattended boat on page 9 should show an anchor line in use for safety and to prevent loss of the boat.

The comment was based on a sample pamphlet that did not show anchor lines in the illustrations. The published UL 1123 standard does show an anchor line in its illustration of page 7 of a PFD pamphlet, but not in the illustrations for pages 9 and 13 of a PFD pamphlet. The Coast Guard has asked UL to consider revising UL 1123 to include the suggested illustration changes in UL 1123 for pages 9 and 13 of a PFD pamphlet. UL estimates it would take four months to revise UL 1123. If UL makes substantive changes to the standard incorporated by reference, the Coast Guard may consider those changes for incorporation. However, before taking final action, the Coast Guard will publish a separate notice in the **Federal Register** for public comment.

Discussion of This Rulemaking

Parts 175 and 181 of title 33 Code of Federal Regulations contain requirements for operators to carry PFDs on recreational boats, for manufacturers to provide a pamphlet with every PFD sold or offered for sale, and specific text and illustrations for PFD pamphlets. The following is a section by section discussion of the final rule.

Section 175.15 Personal Flotation Devices Required

This rule revises § 175.15 to clarify that one Type IV PFD must be on board a recreational boat 16 feet in length or more in addition to a Type I, II, or III PFD for each person.

Section 175.17 Exceptions

This rule removes paragraph (a) of § 175.17. This provision, added in 1976, excepted operators of certain kayaks and canoes from the requirement to carry a Type I, II, III, or IV PFD prior to October 1, 1977, and is obsolete. This rule also revises and combines paragraphs (b) and (c) of § 175.17 into one paragraph, and redesignates paragraph (a) of § 175.17, to allow a Type V PFD to be used as a substitute for a Type I, II, III or IV PFD when used in accordance with the restrictions on the approval label, if any.

Section 175.19 Stowage

This rule revises PFD stowage requirements in § 175.19 to reflect that some Type V PFDs may be substituted for type IV PFDs.

Section 175.21 Condition; Size and Fit; Approval Marking

This rule revises paragraph (c) of § 175.21 (formerly "Conditions: Approval; marking") to make current PFD size and fit requirements more apparent.

Section 175.23 Personal Flotation Device Equivalents

This rule removes § 175.23. In 1973, the Coast Guard required manufacturers to add the type designation in addition to the approval number on new PFD labels. Millions of PFDs, already approved, did not bear the PFD type designation, or had a type designation different than the one adopted in 1973. Table 175.23 provided an index showing the type designation for these PFDs, based on the Coast Guard approval number, as long as they remained in serviceable condition. This table resolved the type classification of older PFDs with no type designations or type designations inconsistent with the new type designation system. The few of these PFDs still in use are now about 20 years old, or older. The Coast Guard believes this information table is no longer needed in the Code of Federal Regulations.

Section 181.4 Incorporation by Reference

This rule adds a new § 181.4 to incorporate by reference UL 1123 requirements for design of PFD pamphlets (replaces § 181.705 requirements) and packaging of PFD pamphlets (replaces § 181.703 requirements). Section 181.703 is revised and § 181.705 is removed.

Section 181.702 Recreational Hybrid PFD Information Pamphlet Requirements

This rule revises § 181.702 to delete references to § 181.705.

Section 181.703 PFD Information Pamphlet Requirements

This rule revises § 181.703 (formerly "PFD information requirements; manufacturer requirements") to replace references to specific text and packaging requirements with references to UL 1123. This rule also adds a provision to prohibit the sale of a PFD unless a pamphlet meeting UL 1123 is attached. The provision is intended to apply to individuals selling new PFDs but not individuals subsequently reselling used PFDs.

Section 181.705 PFD Information Pamphlet; Contents

This rule removes § 181.705. This section contained the specific text required for PFD pamphlets and is superseded by the incorporation by reference of UL 1123 text and illustration requirements.

Incorporation by Reference

The Director of the Federal Register has approved the material in § 181.4 for incorporation by reference under 5 U.S.C. 552 and 1 CFR part 51. The material is available as indicated in that section.

If the publisher makes substantive changes to the material incorporated, the Coast Guard may consider those changes for incorporation. However, before taking final action, the Coast Guard will publish a separate notice in the **Federal Register** for public comment.

Regulatory Evaluation

This rulemaking is not major under Executive Order No. 12291 and not significant under the Department of Transportation Regulatory Policies and Procedures (44 FR 11040; February 26, 1979). The Coast Guard expects the economic impact of this rulemaking to be so minimal that a Regulatory Evaluation is unnecessary. There is no change in the current requirement to carry flotation devices. Most PFD manufacturers subscribe to UL's Listing Service for Marine Buoyant Devices and must already comply with UL 1123 requirements for PFD pamphlets.

Regulatory Flexibility Act

UL 1123 does not currently apply to manufacturers of Type I PFDs. Although this proposal would require these manufacturers to comply with the UL 1123 requirements, it is not expected to add a significant amount to their current cost to produce a PFD pamphlet. Therefore, the Coast Guard certifies under section 605(b) of the Regulatory Flexibility Act (5 U.S.C. 605(a)) that this final rule will not have a significant economic impact on a substantial number of small entities.

Paperwork Reduction Act

This rule contains no collection of information requirements. The requirement for manufacturers to provide an information pamphlet with each PFD sold or offered for sale is not subject to approval by the Office of Management and Budget under the provisions of the Paperwork Reduction

Act of 1980 (Pub. L. 96–511). Since the PFD pamphlets are a public disclosure of information supplied to PFD manufacturers by the Coast Guard through its incorporation by reference of UL 1123, this requirement is not a "collection of information," under 5 CFR 1320.7(c)(2).

Federalism

The Coast Guard has analyzed this rulemaking in accordance with the principles and criteria contained in Executive Order 12612, and has determined that this rulemaking does not have sufficient federalism implications to warrant the preparation of a Federalism Assessment.

Environmental Assessment

The Coast Guard considered the environmental impact of this rulemaking and concluded that, under Sections 2.B.2 of Commandant Instruction M16475.1B, this rulemaking is categorically excluded from further environmental documentation. A Categorial Exclusion Determination is available in the rulemaking docket for inspection or copying where indicated under "ADDRESSES."

List of Subjects

33 CFR Part 175

Marine safety.

33 CFR Part 181

Marine safety, Labeling, Reporting requirements, Incorporation by reference.

For the reasons set out in the preamble, 33 CFR parts 175 and 181 are amended as follows:

PART 175—EQUIPMENT REQUIREMENTS

1. The authority citation for part 175 continues to read as follows:

Authority: 46 U.S.C. 4302; 49 CFR 1.46.

2. Section 175.15 is revised to read as follows:

§ 175.15 Personal flotation devices required.

Except as provided in § 175.17 of this part:

(a) No person may use a canoe or kayak of any length or any other recreational boat less than 16 feet in length unless at least one PFD of the following types is on board for each person:

(1) Type I PFD;

(2) Type II PFD;

(3) Type III PFD; or

(4) Type IV PFD.

(b) No person may use a recreational boat 16 feet or more in length, except a canoe or kayak, unless:

(1) One Type IV PFD is on board, and

(2) At least one PFD of the following types is on board for each person:

(i) Type I PFD;

(ii) Type II PFD; or

(iii) Type III PFD.

3. Section 175.17 is revised to read as follows:

§ 175.17 Exceptions.

A Type PFD may be carried in lieu of any PFD required under § 175.15 of this part provided:

(a) The approval label on the Type V PFD indicates that the device is approved:

(1) For the activity in which the boat is being used; or

(2) As a substitute for a PFD of the Type required on the boat in use;

(b) The PFD is used in accordance with any requirements on the approval label; and

(c) The PFD is used in accordance with requirements in its owner's manual, if the approval label makes reference to such a manual.

4. Section 175.19 is revised to read as follows:

§ 175.19 Stowage.

(a) No person may use a recreational boat unless each Type I, II, or III PFD required by § 175.15 of this part, or equivalent type allowed by §175.17 of this part, is readily accessible.

(b) No person may use a recreational boat unless each Type IV PFD required by § 175.15 of this part, or equivalent type allowed by §175.17 of this part, is immediately available.

5. Section 175.21 is revised to read as follows:

§ 175.21 Condition; size and fit; approval marking.

No person may use a recreational boat unless each PFD required by § 175.15 of this part or allowed by § 175.17 of this part is:

(a) In serviceable condition;

(b) Of an appropriate size and fit for the intended wearer, as marked on the approval label; and

(c) Legibly marked with its approval number, as specified in 46 CFR part 160.

§ 175.23 [Removed]

6. Section 175.23 is removed.

PART 181—MANUFACTURERS REQUIREMENTS

7. The authority citation for part 181 continues to read as follows:

Authority: 46 U.S.C. 4302; 49 CFR 1.46.

8. Section 181.4 is added to read as follows:

§ 181.4 Incorporation by reference.

(a) Certain materials are incorporated by reference into this part with the approval of the Director of the Federal Register in accordance with 5 U.S.C. 552(a). To enforce any edition other than the one listed in paragraph (b) of this section, notice of change must be published in the **Federal Register** and the material made available to the public. All approved material is on file at the Office of the Federal Register, 1100 L Street NW., Washington, DC, and at the United States Coast Guard Survival Systems Branch (G–MVI–3), 2100 Second Street, SW., Washington, DC 20593–0001, and is available from the sources listed in paragraph (b) of this section.

(b) The materials approved for incorporation by reference in this part, and the sections affected are:

Underwriters Laboratories, Inc.

333 Pfingsten Road, Northbrook, IL 60062.

UL 1123, Marine Buoyant Devices §§ 33, 34, 35, edition 5, June 5, 1989 ..... § 181.703

9. Section 181.702 is revised to read as follows:

§ 181.702 Recreational hybrid PFD information pamphlet requirements.

(a) Notwithstanding the requirements in § 181.703 of this part, each manufacturer of recreational hybrid PFDs must furnish with each of these PFDs a pamphlet meeting 46 CFR 160.077–27.

(b) The requirements for PFD pamphlets in § 181.703 of this part do not apply to recreational hybrid PFDs.

10. Section 181.703 is revised to read as follows:

§ 181.703 PFD information pamphlet requirements.

(a) Each manufacturer of a Type I, II, III, IV, or V personal flotation device must furnish with each PFD that is sold or offered for sale for use on a recreational boat, an information pamphlet that meets the requirements of UL 1123, sections 33, 34 and 35.

(b) No person may sell or offer for sale for use on a recreational boat a Type I, II, III, IV, or V personal flotation device unless a PFD pamphlet required by this

section is attached in such a way that it can be read prior to purchase.

§ 181.705 [Removed]

11. Section 181.705 is removed.

Dated: July 25, 1990.

J. W. Lockwood,

Captain, U.S. Coast Guard, Acting Chief, Office of Navigation, Safety and Waterway Services.

[FR Doc. 90-17731, Filed 8-3-90; 8:45 am]

BILLING CODE 4910-14-M

federal register

Monday
August 6, 1990

Part VI

State Justice Institute

Proposed Grant Guideline

STATE JUSTICE INSTITUTE

Grant Guideline

AGENCY: State Justice Institute.

ACTION: Proposed Grant Guideline.

SUMMARY: This Guideline sets forth the proposed administrative, programmatic, and financial requirements attendant to Fiscal Year 1991 State Justice Institute grants, cooperative agreements, and contracts.

DATES: The Institute invites public comment on the Guideline until September 5, 1990.

ADDRESSES: Comments should be sent to: State Justice Institute, 120 S. Fairfax St., Alexandria, Virginia 22314.

FOR FURTHER INFORMATION CONTACT: David I. Tevelin, Executive Director, or Richard Van Duizend, Deputy Director, at the above address, or at (703) 684–6100.

SUPPLEMENTARY INFORMATION: Pursuant to the State Justice Institute Act of 1984, 42 U.S.C. 10701, *et seq.*, as amended, the Institute is authorized to award grants, cooperative agreements, and contracts to State and local courts, nonprofit organizations, and others for the purpose of improving the administration of justice in the State courts of the United States. Approximately $10–12 million is expected to be available for award in FY 1991. The Guideline published for comment below establishes the Institute's funding schedule, procedures, and Special Interest categories for FY 1991.

Funding Schedule

With two exceptions noted immediately below, the FY 1991 funding cycle will be substantially similar to the FY 1990 cycle. The FY 1991 concept paper deadline will be in early December, 1990. The final Guideline will set the specific date. The Board will meet in early March, 1991 to invite formal applications based on the most promising concept papers; applications will be due in May; and awards will be approved by the Board in July.

The exceptions to this schedule are proposals to follow up on the "Future and the Courts" Conference held this past May in San Antonio under the joint sponsorship of the Institute and the American Judicature Society, and proposals to sponsor a national conference on "State-Federal Judicial Issues".

With respect to the "Futures Conference" follow-up, the Board of Directors has approved an accelerated schedule in order to provide assistance as soon as possible to those who left San Antonio inspired to act on the many provocative ideas generated at the Conference. As set forth in section II.B.2.d. of the Guideline, concept papers proposing followup activities to the Conference must be mailed by October 10, 1990. The Board will invite applications at its November 30–December 1 meeting, and make final grant decisions at its early March meeting.

The same accelerated schedule applies to proposals to organize and present a National Conference on State-Federal Judicial Issues (see section II.B.2.b.iv.(b). for the possible range of topics to be explored at that conference).

Special Interest Categories

The proposed Guideline contains 13 Special Interest categories, i.e., those project areas that the Board has identified as being of particular importance to the State courts. Two categories in last year's Grant Guideline have been eliminated from the proposed FY 1991 Guideline: "Career Development in the Courts" and "Improving the Decisionmaking Process in the Appellate Courts". Two other FY 1990 categories have been revised to focus on "The Courts and the Community" (see section II.B.2.a.) and "The Design of Effective Orders" (see section II.B.2.i.). The former seeks proposals to enhance the links, communication, and understanding between the courts and the communities they serve. The latter seeks projects that would test and evaluate whether well-designed court orders result in greater compliance in both civil and criminal cases.

Education and Training. In the "Education and Training for Judges and Other Key Court Personnel" Special Interest Category (II.B.2.b.), the Board proposes to maintain the same target allocations for each educational sub-category as were established for FY 1990. The proposed allocations for FY 1991, therefore, are:

State Initiatives	$750,000
National/Regional Training Programs	750,000
Technical Assistance	600,000
Conferences	500,000
Renewal Education Grants	750,000
Total	$3,350,000

In FY 1990, the Board approved awards of $279,168 to support State Initiatives; $1,138,942 to support National/ Regional Training Programs; $0 to support judicial education Technical Assistance programs; $576,522 to support educational Conferences; and $1,490,010 to support renewal education projects.

In order to achieve the greater balance sought between State Initiatives and National/Regional Training Programs, and to respond to a critical need for grant support identified by State judicial educators, the Board proposes to reserve $250,000 of the $750,000 to be allocated for State Initiatives for in-State implementation of model training programs previously developed with SJI support.

Grants to support such projects would be limited to no more than $20,000 each and would be awarded on the basis of criteria including the need for outside funding; the certainty of implementation; and the interest of the affected judiciary and other court personnel. Such factors as geographical and subject matter diversity will also be considered. Rather than requiring a formal application for such grants, the Institute would consider a detailed letter from the applicant at any time during the fiscal year. See section II.B.2.b.i.(b).

In section II.B.2.b.iv., the Guideline invites proposals to support three national conferences: the "State-Federal Judicial Issues" Conference noted above; a conference on "The Impact of Substance Abuse Cases on the Courts;" and a conference on "The Improvement of the Adversary System." Although the anticipated cost of these conferences will undoubtedly exceed the $500,000 allocated in the Conferences sub-category, the grants made from FY 1991 funds would likely support only the planning and development of at least two of the conferences. FY 1992 grants would likely support the actual presentation of the Substance Abuse and Adversary System conferences.

The Board also specifically invites comment on the specific issues these conferences should address and on the types of projects the Institute should consider supporting in the "Use of Juries" (section II.B.2.h.), "Substance Abuse" (section II.B.2.j.), and "Responding to the Court-Related Needs of Victims and Witnesses" (section II.B.2.k.) Special Interest categories.

The Special Interest Category on the "Use of Juries" has been substantially rewritten to focus on a range of fundamental jury-related issues not covered in current Institute-supported projects. More limited revisions have been made to the Special Interest categories on "Improving Communication and Coordination Among Courts" (section II.B.2.e.), "Responding to the Court Related Needs of Victims and Witnesses," and the "Court-Related Needs of Elderly and Disabled Persons" (section II.B.2.1.) to

highlight issues and problems not previously addressed.

In several Special Interest categories, the proposed Guideline lists the topics already addressed by Institute supported grants. Applicants are encouraged to propose projects covering other aspects of or approaches to the issues listed in those categories.

"Single Jurisdiction" Grants. The Board also proposes to modify the "Programs Addressing a Critical Need of a Single State or Local Jurisdiction" funding category (section II.C.). In FY 1990, the category reserved up to $1,000,000 for projects that would meet the "Critical Needs of the Largest Urban Courts." Although the benefits of those projects would be limited to the courts of one jurisdiction, the Board believed such projects nevertheless warranted SJI support if the applicant court could demonstrate a critical need for the project and the lack of sufficient State or local funding to support it within the foreseeable future. Another $500,000 was reserved for similarly needed projects in other jurisdictions.

In the FY 1991 Guideline, the Board proposes to retain the "Single Jurisdiction" funding category but to revise it by eliminating the specific target allocation for the largest urban courts, and by limiting the potential set-aside for all "single jurisdiction" projects to $1,000,000.

Enforcement of Statutory Anti-Lobbying Provisions

Section 207(a)(1) of the State Justice Institute Act, 42 USC 10706(a)(1), as amended, prohibits the use of Institute funds to directly or indirectly influence the passage or defeat of any legislation by Congress. In order to implement that prohibition effectively, and to assure that Institute-supported projects are designed and carried out in an unbiased manner, the Board proposes to include a policy statement in the "Lobbying" section of the Guideline (section X.D.) stating that "the Institute will not knowingly award a grant to an applicant that has, directly or through an entity that is part of the same organization as the applicant, advocated a position before Congress on the specific subject matter of the application."

Accordingly, organizations invited to submit applications will be asked to complete a form indicating whether they, or another component of their organization, have lobbied Congress on any issue, and, if so, to identify the specific subjects of their lobbying efforts. (see section VII.C.)

Technical Changes

Technical changes have been made with respect to:

—The definition and timing of matching contributions (sections III. and XI.D.1);
—The applicability of grant amount limitations to continuation as well as new grants (section V.B.);
—The format of, and requirements for concept papers and applications (sections VI.A.2. and VII.C.); and
—The number of copies of products to be sent to the Institute at the conclusion of grant projects (section VII.C.6.).

Recommendations to Grantwriters

Over the past three years, Institute staff have reviewed approximately 1,100 concept papers and over 400 applications. On the basis of those reviews, inquiries from applicants, and the views of the Board, the Institute offers the following recommendations to help potential applicants present workable, understandable proposals that can meet the funding criteria set forth in this Guideline.

The Institute suggests that applicants make certain that they address the questions and issues set forth below when preparing a concept paper or application. Concept papers and applications should, however, be presented in the formats specified in sections VI. and VII. of the Guideline, respectively.

1. *What is the subject or problem you wish to address?* Describe the subject or problem and how it affects the courts and the public. Discuss how your approach will improve the situation or advance the state of the art or knowledge, and explain why it is the most appropriate approach to take. When statistics or research findings are cited to support a statement or position, the source of the citation should be referenced in a footnote.

2. *What do you want to do?* Explain the goal(s) of the project in simple, straightforward terms. To the greatest extent possible, an applicant should avoid a specialized vocabulary that is not readily understood by the general public. Technical jargon does not enhance a paper.

3. *How will you do it?* Describe the methodology carefully so that what you propose to do and how you would do it is clear. All proposed tasks should be set forth so that a reviewer can see a logical progression of tasks and relate those tasks directly to the accomplishment of the project's goal(s). When in doubt about whether to provide a more detailed explanation or to assume a particular level of knowledge or expertise on the part of the reviewers, err on the side of caution and provide the additional information. A description of project tasks will also help identify necessary budget items. All staff positions and project costs should relate directly to the tasks described. The Institute encourages concept paper applicants to attach letters of cooperation and support from the courts and related agencies that will be involved in or directly affected by the proposed project.

4. *How will you know it works?* Every project design must include an evaluation component to determine whether the proposed training, procedure, service, or technology accomplished the objectives it was designed to meet. Concept papers and applications should describe the criteria that will be used to evaluate the project's effectiveness and identify program elements which will require further modification. The description in the application should include how the evaluation will be conducted, when it will occur during the project period, who will conduct it, and what specific measures will be used. In most instances, the evaluation should be conducted by persons not connected with the implementation of the procedure, training, service, or technique, or the administration of the project.

The Institute has also prepared a more thorough list of recommendations to grantwriters regarding the development of project evaluation plans. Those recommendations are available from the Institute upon request.

5. *How will others find out about it?* Every project design must include a plan to disseminate the results of the training, research, or demonstration beyond the jurisdictions and individuals directly affected by the project. The plan should identify the specific methods which will be used to inform the field about the project, such as the publication of law review or journal articles, presentations at appropriate conferences, or the distribution of key materials. A statement that a report or research findings "will be made available to" the field is not sufficient. The specific means of distribution or dissemination should be identified. Reproduction and dissemination costs are allowable budget items.

6. *What are the specific costs involved?* The budget in both concept papers and applications should be clearly presented. Major budget categories such as personnel, benefits, travel, supplies, equipment, and indirect costs should be clearly identified.

7. *What, if any, match is being offered?* Courts and other units of State and local government (not including publicly supported institutions of higher education) are required by the State Justice Institute Act, as amended, to contribute a match (cash, non-cash, or both) of not less than 50 percent of the grant funds requested from the Institute. All other applicants are also encouraged to provide a matching contribution to assist in meeting the costs of a project. The match requirement works as follows: if, for example, the total cost of a project is anticipated to be $150,000, a State or local court or executive branch agency may request up to $100,000 from the Institute to implement the project. The remaining $50,000 (50% of the $100,000 requested from SJI) must be provided as match.

Cash match includes funds directly contributed to the project by the applicant, or by other public or private sources. Non-cash match refers to in-kind contributions by the applicant, or other public or private sources. When match is offered, the nature of the match (cash or in-kind) should be explained and, at the application stage, the tasks and line items for which costs will be covered wholly or in part by match should be specified.

8. *Which of the two budget forms should be used?* Section VII.A.3. of the SJI Grant Guideline encourages use of the spreadsheet format of Form C1 if the funding request exceeds $100,000. Form C1 also works well for projects with discrete tasks, no matter what the dollar value of the project. Form C, the tabular format, is preferred for projects lacking a number of discrete tasks, or for projects requiring less than $100,000 of Institute funding. Generally, applicants should use the form that best lends itself to representing most accurately the budget estimates for the project.

9. *How much detail should be included in the budget narrative?* The budget narrative of an application should provide the basis for computing all project-related costs, as indicated in section VII.D. of the SJI Grant Guideline. To avoid common shortcomings of application budget narratives, the following information should be included:

- Personnel estimates that accurately provide the amount of time to be spent by personnel involved with the project and the total associated costs, including current salaries for the designated personnel (e.g., Project Director, 50% for one year, annual salary of $30,000 = $15,000). If salary costs are computed using an hourly or daily rate, the annual salary and number of hours or days in a work-year should be shown.
- Estimates for supplies and expenses supported by a complete description of the supplies to be used, nature and extent of printing to be done, anticipated telephone charges, and other common expenditures, with the basis for computing the estimates included (e.g., 100 reports × 75 pages each × .05/page = $375.00).

Supply and expense estimates offered simply as "based on experience" are not sufficient.

In order to expedite Institute review of the budget, applicants should make a final comparison of the amounts listed in the budget narrative with those listed on the budget form. In the rush to complete all parts of the application on time, there may be many last-minute changes; unfortunately, when there are discrepancies between the budget narrative and the budget form or the amount listed on the application cover sheet, it is not possible for the Institute to verify the amount of the request. A final check of the numbers on the form against those in the narrative will preclude such confusion.

10. What travel regulations apply to the budget estimates? Transportation costs and per diem rates must comply with the policies of the applicant organization, and a copy of the applicant's travel policy should be submitted as an appendix to the application. If the applicant does not have a travel policy established in writing, then travel rates must be consistent with those established by the Institute or the Federal Government (a copy of the Institute's travel policy is available upon request). The budget narrative should state which regulations are in force for the project and should include the number of persons traveling, the number of trips to be taken, and the length of stay. The estimated costs of travel, lodging, and other subsistence should be listed separately. When combined, the subtotals for these categories should equal the estimate listed on the budget form.

11. May grant funds be used to purchase equipment? Grant funds may be used to purchase or lease only that equipment which is essential to accomplishing the objectives of the project. The budget narrative must list such equipment and explain why the equipment is necessary. Written prior approval of the Institute is required when the amount of automatic data processing equipment to be purchased or leased exceeds $10,000, or the software to be purchased exceeds $3,000.

12. To what extent may indirect costs be included in the budget estimates? It is the policy of the Institute that all costs should be budgeted directly; however, if an applicant has an indirect cost rate that has been approved by a Federal agency within the last two years, an indirect cost recovery estimate may be included in the budget. A copy of the approved rate agreement should be submitted as an appendix to the application. If an applicant does not have an approved rate agreement, an indirect cost rate proposal should be prepared in accordance with section XI.H.3 of the Grant Guideline, based on the applicant's audited financial statements for the prior fiscal year (applicants lacking an audit must budget all project costs directly). If an indirect cost rate proposal is to be submitted, the budget should reflect estimates based on that proposal. Obviously, this requires that the proposal be completed for the applicant's use at the time of application so that the appropriate estimates may be included; however, grantees have until three months after the project start date to submit the indirect cost proposal to the Institute for approval.

13. Does the budget truly reflect all costs required to complete the project? After preparing the program narrative portion of the application, applicants may find it helpful to list all the major tasks or activities required by the proposed project, including the preparation of products, and note the individual expenses, including personnel time, related to each. This will help to ensure that, for all tasks described in the application (e.g., development of a videotape, research site visits, distribution of a final report), the related costs appear in the budget and are explained correctly in the budget narrative.

State Justice Institute Grant Guideline

The following Grant Guideline is proposed by the State Justice Institute for Fiscal Year 1991:

State Justice Institute Grant Guideline—Table of Contents

Summary

I. Background
II. Scope of the Program
III. Definitions
IV. Eligibility for Award
V. Types of Projects and Amounts of Awards
VI. Concept Paper Submission Requirements for New Projects
VII. Application Requirements for New Projects
VIII. Application Review Procedures
IX. Renewal Funding Procedures and Requirements
X. Compliance Requirements
XI. Financial Requirements
XII. Grant Adjustments

Appendix—Contact Persons for State Agencies Administering Institute Grants to State and Local Courts

Summary

This Guideline sets forth the programmatic, financial, and administrative requirements of grants, cooperative agreements, and contracts awarded by the State Justice Institute. The Institute, a private, nonprofit corporation established by an Act of Congress, is authorized to award grants, cooperative agreements and contracts to improve the administration and quality of justice in the State courts.

Grants may be awarded to State and local courts and their agencies; national nonprofit organizations controlled by, operating in conjunction with, and serving the judicial branch of State governments; national nonprofit organizations for the education and training of judges and support personnel of the judicial branch of State governments; other nonprofit organizations with expertise in judicial administration; institutions of higher education; individuals, partnerships, firms, or corporations; and private agencies with expertise in judicial administration if the objectives of the funded program can be better served by such an entity. Funds may also be awarded to Federal, State or local agencies and institutions other than courts for services that cannot be provided for adequately through nongovernmental arrangements.

It is anticipated that approximately $10–12 million will be available for grants, contracts, and cooperative agreements from FY 1991 appropriations. The Institute may also provide financial assistance in the form of interagency agreements with other grantors. The Institute will consider applications for funding support that address any of the areas specified in its enabling legislation; however, the Board of Directors of the Institute has designated certain program categories as being of special interest.

The Institute has established one round of competition for FY 1991 funds. A concept paper submission deadline for all but two funding categories will be in early December, 1990 (the final Guideline will state the specific date). Concept papers concerning the proposed National Conference on State/Federal Judicial Issues and concept papers proposing projects to follow-up on the Future and the Courts Conference must be mailed by October 10, 1990. This Guideline applies to all concept papers and formal applications submitted for FY 1991 funding.

The awards made by the State Justice Institute are governed by the requirements of this Guideline and the authority conferred by Public Law 98–620, title II, 42 U.S.C. 10701, *et seq.*, as amended.

I. Background

The State Justice Institute ("Institute") was established by Public Law 98–620 to improve the administration of justice in the State courts in the United States. Incorporated in the State of Virginia as a private, nonprofit corporation, the Institute is charged, by statute, with the responsibility to:

A. Direct a national program of financial assistance designed to assure that each citizen of the United States is provided ready access to a fair and effective system of justice;

B. Foster coordination and cooperation with the Federal judiciary;

C. Promote recognition of the importance of the separation of powers doctrine to an independent judiciary; and

D. Encourage education for judges and support personnel of State court systems through national and State organizations, including universities.

To accomplish these broad objectives, the Institute is authorized to provide funds to State courts, national organizations which support and are supported by State courts, national judicial education organizations, and other organizations that can assist in improving the quality of justice in the State courts.

The Institute is supervised by an eleven-member Board of Directors appointed by the President, by and with the consent of the Senate. The Board is statutorily composed of six judges, a State court administrator, and four members of the public, no more than two of whom can be of the same political party.

The Institute's program budget for Fiscal Year 1991 is expected to be approximately $10–12 million. Through the award of grants, contracts, and cooperative agreements, the Institute is authorized to perform the following activities:

1. Support research, demonstrations, special projects, technical assistance, and training to improve the administration of justice in the State courts;

2. Provide for the preparation, publication, and dissemination of information regarding State judicial systems;

3. Participate in joint projects with Federal agencies and other private grantors;

4. Evaluate or provide for the evaluation of programs and projects funded by the Institute to determine their impact upon the quality of criminal, civil, and juvenile justice and the extent to which they have contributed to improving the quality of justice in the State courts;

5. Encourage and assist in furthering judicial education;

6. Encourage, assist, and serve in a consulting capacity to State and local justice system agencies in the development, maintenance, and coordination of criminal, civil, and juvenile justice programs and services; and

7. Be responsible for the certification of national programs that are intended to aid and improve State judicial systems.

II. Scope of the Program

During FY 1991, the Institute will consider applications for funding support that address any of the areas specified in its enabling legislation. The Board, however, has designated certain program categories as being of "special interest." See section II.B.

A. Authorized Program Areas.

The State Justice Institute Act authorizes the Institute to fund projects addressing one or more of the following program areas:

1. Assistance to State and local court systems in establishing appropriate procedures for the selection and removal of judges and other court personnel and in determining appropriate levels of compensation;

2. Education and training programs for judges and other court personnel for the performance of their general duties and for specialized functions, and national and regional conferences and seminars for the dissemination of information on new developments and innovative techniques;

3. Research on alternative means for using judicial and nonjudicial personnel in court decisionmaking activities, implementation of demonstration programs to test such innovative approaches, and evaluations of their effectiveness;

4. Studies of the appropriateness and efficacy of court organizations and financing structures in particular States, and support to States to implement plans for improved court organization and financing;

5. Support for State court planning and budgeting staffs and the provision of technical assistance in resource allocation and service forecasting techniques;

6. Studies of the adequacy of court management systems in State and local courts, and implementation and evaluation of innovative responses to records management, data processing, court personnel management, reporting and transcription of court proceedings, and juror utilization and management;

7. Collection and compilation of statistical data and other information on the work of the courts and on the work of other agencies which relate to and affect the work of courts;

8. Studies of the causes of trial and appellate court delay in resolving cases, and establishing and evaluating experimental programs for reducing case processing time;

9. Development and testing of methods for measuring the performance of judges and courts and experiments in the use of such measures to improve the functioning of judges and the courts;

10. Studies of court rules and procedures, discovery devices, and evidentiary standards to identify problems with the operation of such rules, procedures, devices, and standards; and the development of alternative approaches to better reconcile the requirements of due process with the need for swift and certain justice, and testing of the utility of those alternative approaches;

11. Studies of the outcomes of cases in selected areas to identify instances in which the substance of justice meted out by the courts diverges from public expectations of fairness, consistency, or equity; and the development, testing and evaluation of alternative approaches to resolving cases in such problem areas;

12. Support for programs to increase court responsiveness to the needs of citizens through citizen education, improvement of court treatment of witnesses, victims, and jurors, and development of procedures for obtaining and using measures of public satisfaction with court processes to improve court performance;

13. Testing and evaluating experimental approaches to provide increased citizen access to justice, including processes which reduce the cost of litigating common grievances and alternative techniques and mechanisms for resolving disputes between citizens; and

14. Other programs, consistent with the purposes of the Act, as may be deemed appropriate by the Institute, including projects dealing with the relationship between Federal and State court systems in areas where there is concurrent State-Federal jurisdiction and where Federal courts, directly or indirectly, review State court proceedings.

Funds will not be made available for the ordinary, routine operation of court systems in any of these areas.

B. Special Interest Program Categories

1. General Description.

The Institute is interested in funding both innovative programs and programs of proven merit that can be replicated in other jurisdictions. Although applications in any of the statutory program areas are eligible for funding in FY 1991, the Institute is especially interested in funding those projects that:

a. Formulate new procedures and techniques, or creatively enhance existing arrangements to improve the courts;

b. Address aspects of the State judicial systems that are in special need of serious attention;

c. Have national significance in terms of their impact or replicability in that they develop products, services and techniques that may be used in other States;

d. Create and disseminate products that effectively transfer the information and ideas developed to relevant audiences in State and local judicial systems or provide technical assistance to facilitate the adaptation of effective programs and procedures in other State and local jurisdictions.

A project will be identified as a "Special Interest" project if it meets the four criteria set forth above and (1) it falls within the scope of the "special interest" program areas designated below, or (2) information coming to the attention of the Institute from the State courts, their affiliated organizations, the research literature, or other sources demonstrates that the project responds to another special need or interest of the State courts.

Concept papers and applications which address a "Special Interest" category will be accorded a preference in the rating process. (See the selection criteria listed in sections VI.B., "Concept Paper Submission Requirements for New Projects," and VIII.B., "Application Review Procedures.")

2. Specific Categories.

The Board has designated the areas set forth below as "Special Interest" program categories. The order of listing does not imply any ordering of priorities among the categories.

a. *Courts and the Community.* This category includes research, demonstration, and evaluation projects to enhance communication and understanding between courts and the communities they serve. Examples of the issues that may be addressed include: the innovative use of community volunteers to enhance court operations and services; innovative programs that improve access to justice, other than those that provide legal representation; innovative methods of fairly and effectively handling cases involving pro se litigants; methods for improving the court system's responsiveness to public needs and expectations; innovative methods or materials for schools or citizens' groups to improve public understanding of the courts; and other innovative approaches to enhancing public understanding of the purpose and operations of the judicial system and the system's responsiveness to its citizenry.

The category also includes projects designed to examine or enhance relations between the courts and the media. Such projects might address the use of orders limiting access to courtrooms and sealing settlement agreements and dispositional orders, and the effect of such orders on public perceptions of the fairness of the court process.

b. *Education and Training for Judges and Other Key Court Personnel.* The Board of Directors anticipates allocating approximately $3,350,000 for judicial education projects in FY 1991. Of this amount, it is expected that up to $2,600,000 will provide support to projects which the Institute has not funded previously, and up to $750,000 will provide renewal funding for judicial education programs of proven merit under Section IX of the Guideline. The exact amount to be awarded in each subcategory listed below will depend on the number and quality of the applications submitted in both this Special Interest category and other areas of the Guideline. The Board anticipates allocating the $2,600,000 available for new awards in Fiscal Year 1991 as follows:

i. State Initiatives	$750,000
ii. National/Regional Training Programs	750,000
iii. Technical Assistance	600,000
iv. Conferences	500,000
Total	$2,600,000

i. *State Initiatives.* This category includes support for training projects developed or endorsed by a State's courts for the benefit of judges and other court personnel in that State. Funding of these initiatives does not include support for training programs conducted by national providers of judicial education unless such a program is designed specifically for a particular State and has the express support of the State Chief Justice, State Court Administrator, or State Judicial Educator. The types of programs to be supported within this category should be

defined by individual State need but may include:

(a) *Development of In-State Education Programs*

—The development of State-determined standards for judicial education;
—The preparation of State plans for judicial education, including model plans for career-long education of the judiciary (e.g., new judge training and orientation followed by continuing education and career development);
—Seed money for the creation of an ongoing State-based entity for planning, developing, and administering judicial education programs;
—The development of a pre-bench orientation program and other training for new judges;
—The development of benchbooks and other educational materials; and
—Seed money for innovative continuing education and career development programs, including training which brings teams of judges, court managers and other court personnel together to address topics of mutual interest and concern.

(b) *Implementation of In-State Education Programs.* The Board proposes to reserve $250,000 of the $750,000 allocated for State Initiatives to provide support for in-State implementation of model curricula and/or model training previously developed with SJI support. Such projects may include in-State replication or State-specific modification of a model training program, model curriculum, or course module developed with SJI funds by any other State or any national organization; adaptation of a curriculum or a portion of a curriculum developed for a national or regional conference; or adaptation of curriculum for use as part of a State judicial conference or State training program for judges and other court personnel. Only State or local courts may apply for in-State implementation funding.

Grants to support in-State implementation of training programs previously developed with SJI funds are limited to no more than $20,000 each and will be awarded on the basis of criteria including: the need for outside funding; the certainty of implementation; and expressions of interest by the judges and/or court personnel (e.g., the State judicial educator, State Court Administrator or individual court manager) who would be directly involved in or affected by the project. The Institute will also consider such factors as diversity of subject matter and geographic diversity in making implementation awards. In lieu of concept papers and formal applications, applicants for in-State implementation grants may submit a detailed letter outlining the proposed project and addressing the three criteria listed above, at any time. Applicants seeking other types of funding must comply with the requirements for concept papers and applications set forth in Sections VI and VII or the requirements for renewal applications set forth in Section IX.

ii.—*National and Regional Training Programs.* This category includes support for national or regional training programs developed by any provider, e.g., national organizations, State courts, universities, or public interest groups. Within this category, priority will be given to training projects which address issues of major concern to the State judiciary and other court personnel. Programs to be supported may include:

—Training programs or seminars on topics of interest and concern that transcend State lines;
—Multi-State or regional training programs sponsored by national organizations, State courts or universities; and
—Specialized training programs for State trial and appellate court judges, State and local court managers, or other court personnel.

iii. *Technical Assistance.* Unlike the preceding categories which support direct training, "Technical Assistance" refers to services necessary for the development of effective educational projects for judges and other court personnel. Projects in this category should focus on the needs of the States, and applicants should demonstrate clearly their ability to work effectively with State judicial educators.

Within this category, priority will be given to the support of projects focused on State-to-State, State-to-national, and national-to-State transfer of ideas and information. Support and assistance to be provided by such projects may include:

—Development of educational curricula and support materials;
—Training faculty in adult education theory and practice;
—Consultation on planning, developing and administering State judicial education programs;
—Coordination and exchange of information among judicial education providers;
—Collection and dissemination of information about exemplary adult and continuing judicial education programs;
—Development of improved methods of evaluating court education programs; and
—On-site assistance in any of the areas listed above.

iv. *Conferences.* This category includes support for regional or national conferences on topics of major concern to the State judiciary and court personnel. The Institute intends to support the planning and presentation of three conferences addressing the following three topics: The Impact of Substance Abuse Cases on the State Courts; State-Federal Judicial Issues; and The Improvement of the Adversary System.

(a) *The Impact of Substance Abuse Cases on the State Courts.* The Board of Directors is specifically interested in receiving proposals from national organizations, universities, courts, and others to conduct a major national conference focusing on the impact of substance abuse cases on the State courts. The envisioned conference should be planned in collaboration with judges, court administrators, experts in the field of substance abuse, prosecutors and representatives from the criminal defense bar, treatment programs and human services agencies. It should provide the judiciary and other court personnel with basic information on substance abuse; the management of drug-related cases in criminal, civil, domestic relations, and juvenile dockets; effective treatment programs for individuals who abuse alcohol and other drugs; and sentencing alternatives. The Board specifically invites comments regarding the specific issues that should be addressed at the proposed conference, in addition to or instead of those listed below.

1. How is substance abuse defined and what are the various theoretical contexts for understanding the characteristics and different stages of substance abuse?

2. How can substance abuse be effectively diagnosed and treated? What diagnostic tools exist to help court personnel detect and assess substance abuse? Are new tools needed? What kinds of treatment programs exist, how do they differ, and do new program models need to be developed?

3. What are the "special issues" court personnel must understand and address with regard to substance abuse, for example:

—The relationship between AIDS and substance abuse;
—The appropriate response courts can make to problems resulting from the increasing number of infants born with impairments resulting from maternal drug and alcohol abuse;

—The relationship between substance abuse, child abuse and family violence; and
—The cumulative effect of substance abuse throughout succeeding generations.

4. What do judges need to know to make informed treatment and dispositional decisions? What are appropriate "sentencing alternatives" for adjudicated substance abusers and in what circumstances should they be used? What is the difference in the motivations of drug users, drug sellers who also use drugs, and non-user drug distributors and how should these differences be reflected in sentencing? What are the public's expectations of the nature and effect of sentences in cases involving substance abuse and the illegal distribution of controlled substances?

5. What can or should judges do when the community does not have a sufficient number of treatment programs to which to refer substance abusers?

6. How are court dockets, both criminal and civil, impacted as a result of the increasing volume of substance abuse-related cases? How can a high volume of substance abuse-related cases best be managed fairly and expeditiously by the courts?

7. What resources already exist to help further educate judges and other court personnel on substance abuse, its causes, and its treatment?

(b) *National Conference on State-Federal Judicial Issues.* This conference, which will be considered by the Institute on an accelerated timetable, will focus on issues relating to the relationship between the State and Federal courts. Specifically, the Board expects the Conference to address the following topics, among others:

—The impact of possible revisions in habeas corpus procedures on the State and Federal judicial systems;
—Coordination between State and Federal courts in the handling of mass tort litigation;
—Reallocation of judicial business between the State courts, such as the recommendations made by the Federal Courts Study Committee, i.e., more drug case prosecutions in State courts and changes in Federal diversity of citizenship jurisdiction;
—The frequency, outcomes, and effect of Federal courts certifying questions of law for State Supreme Courts;
—The roles of local State-Federal Judicial Councils and a National State-Federal Judicial Council; and
—An exploration of the desirability and feasibility of better ways to share information between the State and Federal courts systems and to coordinate State and Federal judicial planning efforts.

The Board contemplates co-sponsoring the Conference with the Federal Judicial Center. In order to convene this important conference as soon as possible, the Board has approved an accelerated schedule for the consideration of concept papers and applications proposing the conference. Concept papers must be submitted no later than October 10, 1990. The Board will consider the concept papers and invite formal applications at its November 30-December 1 meeting. The applications will be considered at the Board's expected meeting in early March 1991.

(c) *The Improvement of the Adversary System.* There have been a number of conferences and symposia addressing alternative dispute resolution procedures and their relationship to the courts. The Institute is now interested in supporting a conference that would examine the adversary system itself, including its strengths, its weaknesses, and what steps can be taken to improve both the system and the public's perception of the system.

Among the many topics that could be addressed at such a conference are: The types of cases for which the adversary process may be the most appropriate and the least appropriate; the role of the jury and the use of special or blue-ribbon juries; simplifying the pretrial process, including voir dire; the best way of presenting and adjudicating technically complex cases; methods for reducing trial length and expediting the trial process; the education of trial counsel and litigants about settlement techniques and methods for determining the value of their cases; the use and impact of rule 11 and other sanctions; and improving access to the adversary process for poor and middle-income litigants. The conference should involve the participation of judges, attorneys, court managers, legal scholars, researchers, business leaders, citizen organizations, dispute resolution specialists, and media representatives.

All Court education programs should assure that faculty understand and apply adult education techniques and teaching methods; provide opportunities for structured interaction among participants; develop tangible products and materials for use by the faculty, participants and other judicial educators; employ a process for the recruitment of qualified and effective faculty; and develop sound methods for evaluating the impact of the training.

c. *Alternative Dispute Resolution (ADR).* This category covers the evaluation of new and existing dispute resolution procedures and programs that have a substantial likelihood of resolving mass tort and multi-party cases, matters involving domestic violence, and other court cases in a more fair, expeditious, and less expensive manner than traditional court processing, with special emphasis on the effect of such programs on the quality of justice, litigant and court costs, court workload, and case processing. The Institute also is interested in continuing to explore the appropriate uses of ADR, the proper relationship between ADR and the courts; the nature and effect of settlement practices; and the ethical issues that face judicial officers who are involved in settlement activities.

In previous funding cycles, grants have been awarded to support development and evaluation of: Juvenile offender-victim mediation; divorce mediation; court-annexed arbitration of civil cases; court-annexed mediation of civil, criminal, and domestic relations cases; medical malpractice mediation; appellate mediation; alternatives to adjudication in child abuse and neglect cases; early neutral evaluation of motor vehicle cases; the impact of private judging on the State courts; evaluations of multi-door courthouse programs; and civil settlement processes.

Additional SJI-supported ADR projects include: technical assistance to courts interested in implementing or expanding multi-door courthouse programs; development of standards for court-annexed mediation programs; examination of the philosophy, purpose, and evolution of ADR programs; testing of a referral-based mediation program; the retention and productivity of volunteer community mediators; the applicabilityof various dispute resolution procedures to different cultural groups; an examination of whether mediation of matters involving domestic violence is safe and appropriate; and a national directory of ADR programs.

d. *The Future and the Courts.* The mission of the "Future and the Courts" Conference convened by SJI and the American Judicature Society in San Antonio in May 1990 was to "formulate visions of the American judicial system over the next 30 years and beyond, establish goals for the long-term needs of the State courts, and identify an agenda for planning, action and research to achieve those goals." The Board has developed a list of Conference follow-up activities that would enable those at the Conference and others to begin to act on the agenda

developed at the Conference in their own jurisdictions.

In order to expedite those activities, and preserve the momentum of the Conference, the Board has approved an accelerated schedule for Conference follow-up projects. Concept papers proposing such projects will be due October 10, 1990. The Board will review the concept papers at its November 30-December 1, 1990 meeting and invite applications that will be considered at the Board's anticipated meeting in early March 1991.

The Board will consider projects proposing:

(1) State futures commissions, conferences, and educational programs exposing judges and court staff to futures thinking and the trends that might impact their courts. *State futures commissions will be supported only if they are significantly different in approach and structure from futures commissions previously supported by the Institute in Arizona, Colorado, Massachusetts, Utah, and Virginia;*

(2) Development, implementation, and evaluation of institutionalized long-term planning efforts in individual States and local jurisdictions, e.g., the inclusion of environmental scanning and long-term futures planning as components of the courts' routine planning process;

(3) Conferences to bring together people from States that have engaged in futures efforts, States that are just beginning those efforts, and States that are just starting to think about them, in order to exchange experiences and identify major problem areas and solutions;

(4) Symposia dedicated to certain specific topics that could result in recommendations for future research, planning, training, and action;

(5) Development of informational materials and curricula to enable judges and court personnel to become more familiar with, and apply futures thinking and planning principles; and

(6) Establishment of an ongoing clearinghouse and technical assistance resource center for State and national futures efforts.

e. *Improving Communication and Coordination Among Courts.* This category includes the development, implementation and evaluation of innovative procedural, administrative, technological, and organizational methods to improve communication and coordination among State courts and between State and Federal courts hearing related cases. Among the circumstances in which such improved communication and coordination are particularly needed, are:

—Mass tort litigation;

—Instances in which a litigant in a State civil, criminal or domestic relations case is subject to a Federal bankruptcy proceeding;

—Instances in which a defendant has charges pending in both State and Federal court or in more than one State court;

—Post conviction challenges in capital cases; and

—Instances in which multiple cases are pending involving members of a single family (e.g., divorce, domestic violence, child support, and child custody proceedings).

f. *Application of Technology.* In previous funding cycles, grants have been awarded to support the *demonstration and evaluation of communications technology,* e.g.: an interactive computerized information system to assist pro se litigants, an electronic mail system and computer-based bulletin board to facilitate information transfer among criminal justice agencies in adjoining local jurisdictions, the effects of telephone conferencing in interstate child support cases, and the use of FAX technology by courts;

Demonstration and evaluation of records technology. e.g.: The effects, costs, and benefits of videotape as a technique for making the record of trial court proceedings; an automated microfilm system and an optical disk system for maintaining and retrieving prebate court records; an automated Statewide records management system; the integration of bar-coding technology with an existing automated case management system, and an on-bench automated system for generating and processing court orders;

Court technology assistance services, e:g.: Circulation of a court technology bulletin designed to inform judges and court managers about the latest developments in court-related technologies; creation of a court technology laboratory to provide judges and court managers with the opportunity to test automated court-related systems; enhancement of a data base and circulation of reports documenting automated systems currently in use in courts across the country; establishment of a technical information service to respond to specific inquiries concerning court-related technologies; and development of court automation performance standards.

Current grants also are supporting development of a hands-on seminar for judges and court managers in an automated "courtroom of the future", implementation and evaluation of a Statewide automated integrated case docketing and recordkeeping system, and a national assessment of the efforts to develop and implement Statewide automation of trial courts.

g. *Reduction of Litigation Expense and Delay.* This category includes the testing implementation and evaluation of innovative programs and procedures designed to reduce substantially the expense and delay in civil, criminal, domestic relations, juvenile or other types of litigation at the trial or appellate level (or both); and the examination of effective methods of limiting the expense and delay arising from the use of discovery procedures.

In previous funding cycles, grants have been awarded to support the examination of the causes of delay and the methods for improving case processing in trial courts in rural jurisdictions, limited jurisdiction urban trial courts, and in intermediate appellate courts. In addition, grant support has been awarded to projects testing or examining the impact of innovative procedures for: screening civil cases, handling medical malpractice cases, and expediting appellate dispositions.

The Institute also has supported studies of case processing in domestic relations cases and the extent of case processing problems caused by discovery, as well as assistance to trial courts in major urban areas and to appellate courts to improve case processing, adopt and implement time standards, and otherwise reduce litigation delay.

h. *The Use of Juries.* This category includes the examination of legal and administrative issues regarding the fair and effective use of juries. These include, but are not limited to:

Experiments testing the effect on case outcomes of varying methods of jury selection including use of persons selected from the panel of prospective jurors at random; the use of "blue-ribbon" or specially qualified juries for civil cases involving complex scientific, technical or economic issues; the extent of jury nullification and the characteristics of the cases in which it occurs; the more active participation of juries in the fact-finding process; and innovative methods for preventing attempts to intimidate or influence jurors.

i. *Design of Effective Orders.* This category includes projects that would test and evaluate whether well-designed court orders result in greater compliance in both civil and criminal cases. Such projects could include:

—Testing methods of efficiently and reliably obtaining the information judges need to impose effective criminal sanctions (including probation conditions such as offender treatment plans, fines, and restitution), or equitable dispositional orders in juvenile delinquency, neglect and abuse, domestic relations, and mental health cases;
—Identifying the types of incentives that facilitate defendants' compliance with orders, or disincentives that inhibit compliance; and
—Developing methods such as "plain language" summaries, tape recordings, and other procedures to promote the parties' better understanding of, and compliance with the terminology used in court orders, including, in particular, parties who are illiterate, not fluent in English, or mentally or physically disabled.

j. *Substance Abuse.* This category includes the planning and presentation of seminars or other educational forums for judges, probation officers, caseworkers and other court personnel to examine court-related issues concerning drug and alcohol abuse, to discuss the appropriate role of the courts in addressing the problem of substance abuse and develop specific plans for how individual courts can respond to the problems they face as a result of the increasing volume of substance abuse-related criminal, civil, juvenile, and domestic relations cases.

In addition, this category includes the development and evaluation of innovative case management techniques for handling the increasing volume of substance abuse-related criminal, civil, juvenile, and domestic relations cases fairly and expeditiously; the development and testing of programs which establish coordinated efforts between local courts and treatment providers; evaluation of innovative programs that minimize or reduce recidivism; and the development, and testing and evaluation of profiles, guides, risk assessment instruments and other tools to assist judges in making release, dispositional, treatment, and sentencing decisions in cases involving substance-abusing persons. In addition to the above, see also section II.B.2.b.iv.(a) regarding the Institute's interest in supporting a National Conference on the Impact of Substance Abuse Cases on the Courts.

In previous funding cycles, the Institute has supported demonstration projects which are evaluating the effectiveness of court-based alcohol and drug assessment programs; research on effective strategies for coping with increasing caseload pressures; and local education and training programs for judges and other court personnel on substance abuse and its treatment

k. *Responding to the Court-Related Needs of Victims of Crime and Witnesses.* This category includes the implementation and evaluation of innovative court-based programs and procedures for providing fair treatment to victims of crime and witnesses. Court-based programs are those that are administered directly by the courts or through contracts negotiated between service providers and the courts. Programs and services operating in non-court settings, e.g., prosecutors' offices ordinarily would not be favorably considered for funding.

Eligible projects may involve civil, criminal, domestic relations, juvenile and other types of cases, including but not limited to:

—Demonstrations and evaluations of innovative court policies and practices to protect victims and witnesses from threats and intimidation, particularly in drug and drugrelated cases; and
—Programs and procedures to assure the fair, effective, and efficient handling of domestic violence cases, such as: The appropriate use of court-ordered domestic violence mediation programs; evaluations of innovative court-ordered treatment programs for offenders and their families; and implementation and evaluation of innovative procedures governing the issuance and enforcement of protective orders.

With respect to court-related domestic violence issues, SJI grants have previously been awarded to: Study the effectiveness of probation as a sanction in child sexual abuse cases; evaluate the use of cognitive questioning of child witnesses; develop a model protocol for handling child victim cases in criminal court; examine the use of alternatives to adjudication in child abuse and neglect cases; determine when and how mediation can be used appropriately in domestic relations cases in which domestic violence is alleged; demonstrate and evaluate the use of domestic violence shelter staff to assist victims in filling out and filing requests for injunctions for protection, thereby alleviating the burden placed on court staff; and develop and evaluate judicial education programs on victimization and domestic violence issues.

Current grants also are supporting an examination of the effects of the terms and duration of protection orders in protecting domestic violence victims and deterring batterers; and the identification and documentation of court-related programs that offer effective responses to problems faced by the courts in handling family violence cases.

l. *Responding to the Court-Related Needs of Elderly and Disabled Persons.* This category includes research, demonstration, and evaluation projects on issues related to the fair and effective handling of cases affecting elderly and physically or mentally disabled persons, and access to the courts by those persons. The issues that may be addressed include but are not limited to:

—The fair and effective consideration of cases concerning the cessation of medical and other services to elderly or disabled persons including the determination of what constitutes clear and convincing evidence of a person's wish not to initiate or continue life-sustaining treatment;
—The fair and effective consideration of cases concerning the competency of individuals;
—The design of appropriate guardianship/ conservatorship orders; and
—The improvement of access to courthouses and court proceedings for litigants, jurors, witnesses, and victims of crime who have mobility or communication impairments.

In previous funding cycles, the Institute has supported: Several projects to examine, identify and test procedures to improve the monitoring and enforcement of guardianship orders; a project to develop guidelines for judges in considering cases regarding the withdrawal of life-sustaining treatment; projects to develop training materials on guardianship for judges and potential guardians; projects to develop a benchbook and training materials regarding AIDS for judges, probation officers, and probationers; and a project to develop comprehensive guidelines for courthouse facilities. The Institute also is supporting a national conference on the court-related problems of elderly and disabled persons.

m. *The Relationship Between State and Federal Courts.* This category includes research to develop creative ideas and procedures that could improve the administration of justice in the State courts and at the same time reduce the work burdens of the Federal courts. Such research projects might address innovative State court procedures for:

—Reducing the burdens attendant to Federal habeas corpus cases involving State convictions;
—Handling civil, criminal, domestic relations or other types of cases in

which a party also is subject to a Federal bankruptcy proceeding;
—Processing complex multistate litigation in the State courts;
—Facilitating the adjudication of Federal law questions by State courts with appropriate opportunities for review; and
—Otherwise allocating judicial burdens between and among Federal and State courts.

Other possible areas of research include studies examining the impact of the enforcement of selected Federal statutes on the State courts, and the factors that motivate litigants to select the Federal or State courts in cases in which there is concurrent jurisdiction.

See also section II.B.2.b.iv.(b) soliciting proposals for a National Conference on State-Federal Judicial Issues.

C. Programs Addressing A Critical Need of a Single State or Local Jurisdiction

1. The Board will set aside up to $1,000,000 to support projects submitted by State or local courts that address the needs of only the applicant State or local jurisdiction. A project under this section may address any of the topics included in the Special Interest Categories or statutory Program Areas, and may be submitted by a State court system, an appellate court, or a limited or general jurisdiction trial court in an urban, rural or suburban area.

2. Concept papers and applications requesting funds for projects under this section must meet the requirements of sections VI ("Concept Paper Submission Requirements for New Projects") and VII ("Application Requirements"), respectively, and must demonstrate that:

a. The proposed project is essential to meeting a critical need of the jurisdiction; and

b. The need cannot be met solely with State and local resources within the foreseeable future.

3. All awards under this category are subject to the matching requirements set forth in section X.B.1.

III. Definitions

The following definitions apply for the purposes of this guideline:

A. *Institute.* The State Justice Institute.

B. *State Supreme Court.* The highest appellate court in a State, unless, for the purposes of the Institute program, a constitutionally or legislatively established judicial council that acts in place of that court. In States having more than one court with final appellate authority, State Supreme Court shall mean that court which also has administrative responsibility for the State's judicial system. State Supreme Court also includes the office of the court or council, if any, it designates to perform the functions described in this guideline.

C. *Designated Agency or Council.* The office or judicial body which is authorized under State law or by delegation from the State Supreme Court to approve applications for funds and to receive, administer, and be accountable for those funds.

D. *Grantor Agency.* The State Justice Institute.

E. *Grantee.* The organization, entity, or individual to which an award of Institute funds is made. For a grant based on an application from a State or local court, *grantee* refers to the State Supreme Court.

F. *Subgrantee.* A State or local court which receives Institute funds through the State Supreme Court.

G. *Match.* The portion of project costs not borne by the Institute. Match includes both in-kind and cash contributions. Match does not include project-related income such as tuition or payments for grant products, or time of participants attending an education program.

H. *Renewal Funding.* A grant to support an existing project for an additional period of time. Renewal funding may take the form of a continuation grant or an on-going support grant.

I. *Continuation Grant.* A grant of no more than 24 months to permit completion of activities initiated under an existing Institute grant or enhancement of the programs or services produced or established during the prior grant period.

J. *On-going Support Grant.* A grant of up to 36 months to support a project that is national in scope and that provides the State courts with services, programs or products for which there is a continuing important need.

K. *Human Subjects.* Individuals who are participants in an experimental procedure or who are asked to provide information about themselves, their attitudes, feelings, opinions and/or experiences through an interview, questionnaire, or other data collection technique(s).

IV. Eligibility for Award

In awarding funds to accomplish these objectives and purposes, the Institute has been directed by Congress to give priority to State and local courts and their agencies (42 U.S.C. 10705(b)(1)(A)); national nonprofit organizations controlled by, operating in conjunction with, and serving the judicial branches of State governments (42 U.S.C. 10705 (b)(1)(B)); and national nonprofit organizations for the education and training of judges and support personnel of the judicial branch of State governments (42 U.S.C. 10705(b)(1)(C)).

An applicant will be considered a "priority" education and training applicant under section 10705(b)(1)(C) if: (1) The principal purpose or activity of the applicant is to provide education and training to State and local judges and court personnel; and (2) the applicant demonstrates a record of substantial experience in the field of judicial education and training.

The Institute also is authorized to make awards to other nonprofit organizations with expertise in judicial administration, institutions of higher education, individuals, partnerships, firms, corporations, and private agencies with expertise in judicial administration, provided that the objectives of the relevant program area(s) can be served better. In making this judgment, the Institute will consider the likely replicability of the projects' methodology and results in other jurisdictions. For-profit organizations are also eligible for grants and cooperative agreements; however, they must waive their fees.

Finally, the Institute is authorized to make awards to Federal, State or local agencies and institutions other than courts for services that cannot be adequately provided through nongovernmental arrangements.

Each application for funding from a State or local court must be approved, consistent with State law, by the State's Supreme Court or its designated agency or council. The latter shall receive all Institute funds awarded to such courts and be responsible for assuring proper administration of Institute funds, in accordance with section XI.B.2 of this guideline. A list of persons to contact in each State regarding approval of applications from State and local courts and administration of Institute grants to those courts is contained in the Appendix.

V. Types of Projects and Amounts of Awards

A. Types of Projects

Except as expressly provided in section II.B.2.b. and II.C. above, the Institute has placed no limitation on the overall number of awards or the number of awards in each special interest category. The general types of projects are:

1. Education and training;
2. Research and evaluation;
3. Demonstration; and

4. Technical assistance.

B. Size of Awards

1. Except as specified in paragraphs V.B.2. and 3., concept papers and applications for new projects and applications for continuation grants may request funding in amounts up to $300,000, although new and continuation awards in excess of $200,000 are likely to be rare and to be made, if at all, only for highly promising proposals that will have a significant impact nationally.

2. Applications for on-going support grants may request funding in amounts up to $600,000. At the discretion of the Board, the funds to support ongoing support grants may be awarded either entirely from the Institute's appropriations for the Fiscal Year of the award or from the Institute's appropriations for successive Fiscal Years beginning with the Fiscal Year of the award. When funds to support the full amount of an ongoing support grant are not awarded from the appropriations for the Fiscal Year of award, funds to support the second and any subsequent years of the grant will be made available upon the satisfactory performance of the project as reflected in the quarterly Progress Reports required to be filed and routine grant monitoring, and subject to the availability of appropriations for that Fiscal Year.

C. Length of Grant Periods

1. Grant periods for all new and continuation projects ordinarily will not exceed 24 months.

2. Grant periods for on-going support grants ordinarily will not exceed 36 months.

VI. Concept Paper Submission Requirements for New Projects

Concept papers are an extremely important part of the application process because they enable the Institute to learn the program areas of primary interest to the courts and to explore innovative ideas, without imposing heavy burdens on prospective applicants. The use of concept papers also permits the Institute to better project the nature and amount of grant awards. Because of their importance, the Institute requires all parties requesting financial assistance from the Institute (except those seeking renewal funding pursuant to section IX.) to submit concept papers prior to submitting a formal grant application. This requirement and the submission deadlines for concept papers and applications may be waived by the Board if it determines that time factors or other critical considerations justify the waiver.

A. Format and Content.

Concept papers must include a cover sheet and a narrative.

1. *The cover sheet must contain:*

a. A title describing the proposed project;

b. The name and address of the court, organization or individual submitting the paper; and

c. The name, title, address (if different from that in b.), and telephone number of a contact person who can provide further information about the paper.

2. The narrative must be no more than 10 double-spaced pages on 8½ by 11 inch paper. Margins must not be less than 1 inch and no smaller than 12 point type must be used. The narrative should contain:

a. *Program Areas to be Covered.* A statement which lists the program areas set forth in the State Justice Institute Act, and, if appropriate, the Institute's Special Interest program categories that are addressed by the proposed project. Applicants should explain the proposed project's relationship to a Program Area or Special Interest Category only if it is not obvious.

b. An explanation of the need for the project. If the project is to be conducted in a specific location(s), applicants should discuss the particular needs of the project site(s) to be addressed by the project and why those needs are not being met through the use of existing materials, programs, procedures, services or other resources.

If the project is not site specific, applicants should discuss the problems that the proposed project will address, and explain why existing materials, programs, procedures, services or other resources do not adequately resolve those problems.

c. A summary description of the approach to be taken;

d. A summary description of how the project will be evaluated, including the evaluation criteria;

e. A description of the products that will result, the degree to which they will be applicable to courts across the nation, and the manner in which the products and results of the project will be disseminated;

f. An explanation of the expected benefits to be derived from the project;

g. The identity of the key staff (if known) and a summary description of their qualifications;

h. A preliminary budget estimate including the anticipated costs for personnel, fringe benefits, travel, equipment, supplies, contracts, indirect costs, and other anticipated major expenditure categories;

i. The amount, nature (cash or non-cash), and source of match to be provided (see section X.B.); and

j. A statement of whether financial assistance for the project has been or will be sought from other sources.

3. The Institute encourages concept paper applicants to attach letters of cooperation and support from the courts and related agencies that will be involved in or directly affected by the proposed project.

4. The Institute will not accept concept papers exceeding 10 pages. The page limit does not include letters of cooperation or endorsements. Additional material should not be attached unless it is essential to impart a clear understanding of the project.

5. Applicants submitting more than one concept paper may include material that would be identical in each concept paper in a cover letter, and incorporate that material by reference in each paper. The incorporated material will be counted against the 10-page limit for each paper. A copy of the cover letter should be attached to each copy of each concept paper.

B. Selection Criteria.

1. *All concept papers will be evaluated by the staff on the basis of the following criteria:*

a. The demonstration of need for the project;

b. The soundness and innovativeness of the approach described;

c. The benefits to be derived from the project;

d. The reasonableness of the proposed budget;

e. The proposed project's relationship to one of the "Special Interest" categories set forth in section II.B; and

f. The degree to which the findings, procedures, training, technology, or other results of the project can be transferred to other jurisdictions.

2. "Single jurisdiction" concept papers submitted pursuant to section II.C. will be rated on the proposed project's relation to one of the "Special Interest" categories set forth in section II.B., and on the special requirements listed in section II.C.1.

3. In determining which concept papers will be selected for development into full applications, the Institute will also consider the availability of financial assistance from other sources for the project; the amount and nature (cash or in-kind) of the submitter's anticipated match; whether the submitter is a "priority applicant" under the Institute's enabling legislation (see

42 U.S.C. 10705(b)(1) and section IV above); and the extent to which the proposed project would also benefit the Federal courts or help the State courts enforce Federal consitutional and legislative requirements.

C. Review Process

Concept papers will be reviewed competitively by the Board of Directors. Institute staff will prepare a narrative summary and a rating sheet assigning points for each relevant selection criterion for those concept papers which fall within the scope of the Institute's funding program and merit serious consideration by the Board. Staff will also prepare a list of those papers that, in the judgment of the Executive Director, propose projects that lie outside the scope of the Institute's funding program or are not likely to merit serious consideration by the Board. The narrative summaries, rating sheets, and list of non-reviewed papers will be presented to the Board for their review. Committees of the Board will reveiw concept paper summaries within assigned program areas and prepare recommendations for the full Board. The full Board of Directors will then decide which concept paper applicants should be invited to submit formal applications for funding. The decision to invite an application is solely that of the Board of Directors.

D. Submission Requirements

An original and three copies of all concept papers submitted for consideration in Fiscal Year 1991 must be sent by first class or overnight mail or by courier no later than December, 1990 (the date will be specified in the final Guideline), except for concept papers addressing Special Interest categories b.iv.(a). (Conference on State-Federal Judicial Issues) and d. (The Future and the Courts) which must be sent by October 10, 1990. A postmark or courier receipt will constitute evidence of the submission date. All envelopes containing concept papers should be marked CONCEPT PAPER and should be sent to State Justice Institute, 120 S. Fairfax Street, Alexandria, Virginia 22314.

The Board will meet to review the concept papers and invite applications for the Conference on State-Federal Judicial Issues and on The Future and the Courts on November 30–December 1, 1990. It expects to meet in early March, 1991 to review concept papers and invite applications on all other topics. The Institute will send written notice to all persons submitting concept papers of the Board's decisions regarding their papers and of the key issues and questions that arose during the review process. A decision by the Board not to invite an application may not be appealed, but does not prohibit resubmission of the concept paper or a revision thereof in a subsequent round of funding. The Institute will also notify the designated State contact listed in the appendix when the Board invites applications that are based on concept papers which are submitted by courts within their State or which specify a participating site within their State.

Receipt of each concept paper will be acknowledged in writing. Extensions of the deadline for submission of concept papers will not be granted.

VII. Application Requirements for New Projects

Except as specified in section VI., a formal application for a new project is to be submitted only upon invitation of the Board following review of a concept paper. An application for Institute funding support must include an application form, budget forms (with appropriate documentation), a project abstract and program narrative, and certain certifications and assurances. These documents are described below.

A. Forms

1. *Application Form* FORM A]—The application form requests basic information regarding the proposed project, the applicant, and the amount of funding support requested. It also requires the signature of an individual authorized to certify on behalf of the applicant that the information contained in the application is true and complete, that submission of the application has been authorized by the applicant, and that if funding for the proposed project is approved, the applicant will comply with the requirements and conditions of the award, including the assurances set forth in FORM D.

2. *Certificate of State Approval* (FORM B]—An application from a State or local court must include a copy of FORM B signed by the State's Chief Justice or Chief Judge, the director of the designated agency, or the head of the designated council. The signature denotes that the proposed project has been approved by the State's highest court or the agency or council it has designated. It denotes further that if funding for the project is approved by the Institute, the court or designated agency or council will receive, administer, and be accountable for the awarded funds.

3. *Budget Forms* (FORM C or Cl]—Applicants may submit the proposed project budget either in the tabular format of FORM C or in the spreadsheet format of FORM Cl. Applicants requesting more than $100,000 are encouraged to use the spreadsheet format. If the proposed project period is for more than 12 months, a separate form should be submitted for the portion of the project extending beyond month 12.

In addition to FORM C or Cl, applicants must provide a detailed budget narrative providing an explanation of the basis for the estimates in each budget category. (See Section VII.D.)

If funds from other sources are required to conduct the project, either as match or to support other aspects of the project, the source, current status of the request, and anticipated decision date must be provided.

4. *Assurances* (FORM D]—This form lists the statutory, regulatory, and policy requirements and conditions with which recipients of Institute funds must comply.

B. *Project Abstract.*

The abstract should highlight the purposes, goals, methods and anticipated benefits of the proposed project. It should not exceed one single-spaced page on 8½ by 11 inch paper.

C. *Program Narrative.*

The program narrative should not exceed 25 double-spaced pages on 8½ by 11 inch paper. Margins must not be less than 1 inch, and no smaller than 12 point type must be used. The page limit does not include appendices containing resumés and letters of cooperation or endorsement. Additional background material should be attached only if it is essential to obtaining a clear understanding of the proposed project. Numerous and lengthy appendices are strongly discouraged.

The program narrative should address the following topics:

1. *Project Objectives.* A clear, concise statement of what the proposed project is intended to accomplish. In stating the objectives of the project, applicants should focus on the overall programmatic objective (e.g., to enhance understanding and skills regarding a specific subject, or to determine how a certain procedure affects the court and litigants) rather than on operational objectives (e.g., provide training for 32 judges and court managers, or review data from 300 cases).

2. *Program Areas to be Covered.* A statement which lists the program areas set forth in the State Justice Institute Act, and, if appropriate, the Institute's Special Interest program categories that are addressed by the proposed projects. A discussion should be included only if the relationship between the proposed

project and the program areas and special interest categories is not obvious.

3. *Need for the Project.* If the project is to be conducted in a specific location(s), a discussion of the particular needs of the project site(s) to be addressed by the project and why those needs are not being met through the use of existing materials, programs, procedures, services or other resources.

If the project is not site specific, a discussion of the problems that the proposed project will address, and why existing materials, programs, procedures, services or other resources do not adequately resolve those problems. The discussion should include specific references to the relevant literature and to the experience in the field.

4. *Tasks, Methods and Evaluation.*—

a. *Tasks and Methods.* A delineation of the tasks to be performed in achieving the project objectives and the methods to be used for accomplishing each task. For example:

For research and evaluation projects, the data sources, data collection strategies, variables to be examined, and analytic procedures to be used for conducting the research or evaluation and ensuring the validity and general applicability of the results. For projects involving human subjects, the discussion of methods should address the procedures for obtaining respondents' informed consent, ensuring the respondents' privacy and freedom from risk or harm, and the protection of others who are not the subjects of research but would be affected by the research. If the potential exists for risk or harm to the human subjects, a discussion should be included of the value of the proposed research and the methods to be used to minimize or eliminate such risk.

For education and training projects, the adult education techniques to be used in designing and presenting the program, including the teaching/learning objectives of the educational design, the teaching methods to be used, and the opportunities for structured interaction among the participants; how faculty will be recruited, selected, and trained; the proposed number and length of the conferences, courses, seminars or workshops to be conducted; the materials to be provided and how they will be developed; and the cost to participants.

For demonstration projects, the demonstration sites and the reasons they were selected, or if the sites have not been chosen, how they will be identified and their cooperation obtained; how the program or procedures will be implemented and monitored.

For technical assistance projects, the types of assistance that will be provided; the particular issues and problems for which assistance will be provided; how requests will be obtained and the type of assistance determined; how suitable providers will be selected and briefed; how reports will be reviewed; and the cost to recipients.

b. *Evaluation.* Every project design must include an evaluation plan to determine whether the project met its objectives. The evaluation should be designed to provide an objective and independent assessment of the effectiveness of usefulness of the training or services provided; the impact of the procedures, technology or services tested; or the validity and applicability of the research conducted. In addition, where appropriate, the evaluation process should be designed to provide ongoing or periodic feedback on the effectiveness or utility of particular programs, educational offerings, or achievements which can then be further refined as a result of the evaluation process. The plan should present the qualifications of the evaluator(s); describe the criteria, related to the project's programmatic objectives, that will be used to evaluate the project's effectiveness; explain how the evaluation will be conducted, including the specific data collection and analysis techniques to be used; discuss why this approach is appropriate; and present a schedule for completion of the evaluation within the proposed project period.

The evaluation plan should be appropriate to the type of project proposed. For example, an appropriate evaluation approach for many research projects is review by an advisory panel of the research methodology, data collection instruments, preliminary analyses, and products as they are drafted. The panel should be comprised of independent researchers and practitioners representing the perspectives affected by the proposed project.

The most valuable approaches to evaluating educational or training programs will serve to reinforce the participants' learning experience while providing useful feedback on the impact of the program and possible areas for improvement. One appropriate evaluation approach is to assess the acquisition of new knowledge, skills, attitudes or understanding through participant feedback on the seminar or training event. Such feedback might include a self-assessment on what was learned along with the participant's response to the quality and effectiveness of faculty presentations, the format of sessions, the value or usefulness of the material presented and other relevant factors. Another appropriate approach when an education project involves the development of curricular materials is the use of an advisory panel of relevant experts coupled with a test of the curriculum to obtain the reactions of participants and faculty as indicated above.

The evaluation plan for a demonstration project should encompass an assessment of program effectiveness (e.g., how well did it work?); user satisfaction, if appropriate; the cost effectiveness of the program; a process analysis of the program (e.g., was the program implemented as designed? did it provide the services intended to the targeted population?); the impact of the program (e.g., what effect did the program have on the court? what benefits resulted from the program?); and the replicability of the program or components of the program.

For technical assistance projects, applicants should explain how the quality, timeliness, and impact of the assistance provided will be determined, and should develop a mechanism for feedback from both the users and providers of the technical assistance.

5. *Project Management.* A detailed management plan including the starting and completion date for each task; the time commitments to the project of key staff and their responsibilities regarding each project task; and the procedures that will be used to ensure that all tasks are performed on time, within budget, and at the highest level of quality. The management plan must also provide for the submission of Quarterly Progress and Financial Reports within 30 days after the close of each calendar quarter (i.e., no later than January 30, April 30, July 30, and October 30).

6. *Products.* A description of the products to be developed by the project (e.g., monographs, training curricula and materials, videotapes, articles, or handbooks), including when they will be submitted to the Institute. The application must explain how and to whom the products will be disseminated; identify development, production, and dissemination costs covered by the project budget; and present the basis on which products and services developed or provided under the grant will be offered to the courts community and the public at large. Ordinarily, the products of a research, evaluation, or demonstration project should include an article summarizing

the project findings that is publishable in a journal serving the courts community nationally, an executive summary that will be disseminated to the project's primary audience, or both. The products developed by education and training projects should be designed for use outside the classroom so that they may be used again by original participants and others in the course of their duties. Twenty copies of all project products, including videotapes, must be submitted to the Institute.

7. *Applicant Status.* An applicant that is not a State or local court and has not received a grant from the Institute within the past two years should include a statement indicating whether it is requesting "priority status" recognition as either a national non-profit organization controlled by, operating in conjunction with, and serving the judicial branches of State governments; or a national non-profit organization for the education and training of State court judges and support personnel. See section IV. A request for recognition as a priority recipient pursuant to 42 U.S.C. 10705 (b)(1)(B) or (1)(C) must set forth the basis for designation as a priority recipient in its application. Non-judicial units of Federal, State, or local government must demonstrate that the proposed services are not available from non-governmental sources.

8. *Staff Capability.* A summary of the training and experience of the key staff members and consultants that qualify them for conducting and managing the proposed project. Resumes of identified staff should be attached to the application. If one or more key staff members and consultants are not known at the time of the application, a description of the criteria that will be used to select persons for these positions should be included.

9. *Organizational Capacity.* Applicants that have not received a grant from the Institute within the past two years should include a statement describing the capacity of the applicant to administer grant funds including the financial systems used to monitor project expenditures (and income, if any), and a summary of the applicant's past experience in administering grants, as well as any resources or capabilities that the applicant has that will particularly assist in the successful completion of the project.

If the applicant is a non-profit organization (other than a university), it must also provide documentation of its 501(c) tax exempt status as determined by the Internal Revenue Service and a copy of a current certified audit report. For purposes of this requirement, "current" means no earlier than two years prior to the current calendar year. If a current audit report is not available, the Institute will require the organization to complete a financial capability questionnaire which must be certified by a Certified Public Accountant. Other applicants may be required to provide a current audit report, a financial capability questionnaire, or both, if specifically requested to do so by the Institute.

Unless requested otherwise, an applicant that has received a grant from the Institute within the past two years should describe only the changes in its organizational capacity, tax status, or financial capability that may affect its capacity to administer a grant.

10. *Statement of Lobbying Activities.* Applicants must submit a form (to be prepared by the Institute) that states whether they, or another entity that is a part of the same organization as the applicant, have advocated a position before Congress on any issue, and identifies the specific subjects of their lobbying efforts.

11. *Letters of Support for the Project.* If the cooperation of courts, organizations, agencies, or individuals other than the applicant is required to conduct the project, written assurances of cooperation and availability should be attached as an appendix to the application.

D. Budget Narrative

The budget narrative should provide the basis for the computation of all project-related costs. Additional background or schedules may be attached if they are essential to obtaining a clear understanding of the proposed budget. Numerous and lengthy appendices are strongly discouraged.

The budget narrative should address the items listed below. The costs attributable to the project evaluation should be clearly identified.

1. *Justification of Personnel Compensation.* The applicant should set forth the percentages of time to be devoted by the individuals who will serve as the staff of the proposed project, the annual salary of each of those persons, and the number of work days per year used for calculating the percentages of time or daily rate of those individuals. The applicant should explain any deviations from current rates or established written organization policies.

2. *Fringe Benefit Computation.* The applicant should provide a description of the fringe benefits provided to employees. If percentages are used, the authority for such use should be presented as well as a description of the elements included in the determination of the percentage rate.

3. *Consultant/Contractual Services.* The applicant should describe each type of service to be provided. The basis for compensation rates and the method for selection should also be included. Rates for consultant services must be set in accordance with section XI.H.2.c.

4. *Travel.* Transportation costs and per diem rates must comply with the policies of the applicant organization. If the applicant does not have an established travel policy, then travel rates shall be consistent with those established by the Institute or the Federal Government. (A copy of the Institute's travel policy is available upon request.) The budget narrative should include an explanation of the rate used, including the components of the per diem rate and the basis for the estimated transportation expenses. The purpose for travel should also be included in the narrative.

5. *Equipment.* Grant funds may be used to purchase or lease only that equipment which is essential to accomplishing the objectives of the project. The applicant should describe the equipment to be purchased or leased and explain why the acquisition of that equipment is essential to accomplish the project's goals and objectives. The narrative should clearly identify which equipment is to be leased and which is to be purchased. The method of procurement should also be described. Purchases for automatic data processing equipment must comply with section XI.H.2.b.

6. *Supplies.* The applicant should provide a general description of the supplies necessary to accomplish the goals and objectives of the grant. In addition, the applicant should provide the details supporting the total requested for this expenditure category.

7. *Construction.* Construction expenses are prohibited except for the limited purposes set forth in section X.G.2. Any allowable construction or renovation expense should be described in detail in the budget narrative.

8. *Telephone.* Applicants should include anticipated telephone charges, distinguishing between monthly charges and long distance charges in the budget narrative. Also, applicants should provide the basis used in developing the monthly and long distance estimates.

9. *Postage.* Anticipated postage costs for project-related mailings should be described in the budget narrative. The cost of special mailings, such as for a survey or for announcing a workshop, should be distinguished from routine operational mailing costs. The bases for

all postage estimates should be included in the justification material.

10. *Printing/Photocopying.* Anticipated costs for printing or photocopying should be included in the budget narrative. Applicants should provide the details underlying these estimates in support of the request.

11. *Indirect Costs.* Applicants should describe the indirect cost rates applicable to the grant in detail. These rates must be established in accordance with section XI.H.4. If the applicant has an indirect cost rate or allocation plan approved by any Federal granting agency, a copy of the approved rate agreement should be attached to the application.

12. *Match.* The applicant should describe the source of any matching contribution and the nature of the match provided. Any additional contributions to the project should be described in this section of the budget narrative as well. If in-kind match is to be provided, the applicant should describe how the amount and value of the time, services or materials actually contributed will be documented. Applicants that do not contemplate making matching contributions continuously throughout the course of the project or on a task-by-task basis must provide a schedule within 30 days after the beginning of the project period indicating at what points during the project period the matching contributions will be made. (See sections III.G., VIII.B., X.B. and XI.D.1.)

E. Submission Requirements

1. An application package containing the application, an original signature on FORM A (and on FORM B, if the application is from a State or local court), and four photocopies of the application package must be sent by first class or overnight mail, or by courier no later than May 11, 1990. A postmark or courier receipt will constitute evidence of the submission date. Please mark APPLICATION on all application package envelopes and send to:

State Justice Institute, 120 S. Fairfax Street, Alexandria, Virginia 22314.

Receipt of each proposal will be acknowledged in writing. Extensions of the deadline for receipt of applications will not be granted.

2. Applicants invited to submit more than one application may include material that would be identical in each application in a cover letter, and incorporate that material by reference in each application. The incorporated material will be counted against the 25-page limit for the program narrative. A copy of the cover letter should be attached to each copy of each application.

VIII. Application Review Procedures

A. Preliminary Inquiries

The Institute staff will answer inquiries concerning application procedures. The staff contact will be named in the Institute's letter inviting submission of a formal application.

B. Selection Criteria

1. All applications will be rated on the basis of the criteria set forth below. The Institute will accord the greatest weight to the following criteria:

a. The soundness of the methodology;

b. The appropriateness of the proposed evaluation design;

c. The qualifications of the project's staff;

d. The applicant's management plan and organizational capabilities;

e. The reasonableness of the proposed budget;

f. The demonstration of need for the project;

g. The products and benefits resulting from the project;

h. The demonstration of cooperation and support of other agencies that may be affected by the project;

i. The proposed project's relationship to one of the "Special Interest" categories set forth in section II.B:, and

j. The degree to which the findings, procedures, training, technology, or other results of the project can be transferred to other jurisdictions.

2. "Single jurisdiction" applications submitted pursuant to section II.C. will also be rated on the proposed project's relation to one of the "Special Interest" categories set forth in section II.B. and on the special requirements listed in section II.C.1.

3. In determining which applicants to fund, the Institute will also consider the applicant's standing in relation to the statutory priorities discussed in section IV; the availability of financial assistance from other sources for the project; the amount and nature (cash or in-kind) of the applicant's match; and the extent to which the proposed project would also benefit the Federal courts or help the State courts enforce Federal constitutional and legislative requirements.

C. Review and Approval Process

Applications will be reviewed competitively by the Board of Directors. The Institute staff will prepare a narrative summary of each application, and a rating sheet assigning points for each relevant selection criterion. When necessary, applications may also be reviewed by outside experts. Committees of the Board will review applications within assigned program categories and prepare recommendations to the full Board. The full Board of Directors will then decide which applications to approve for a grant. The decision to award a grant is solely that of the Board of Directors.

Awards approved by the Board will be signed by the Chairman of the Board on behalf of the Institute.

D. Return Policy

Unless a specific request is made, unsuccessful applications will not be returned. Applicants are advised that Institute records are subject to the provisions of the Federal Freedom of Information Act, 5 U.S.C. 552.

E. Notification of Board Decision

The Institute will send written notice to applicants concerning all Board decisions to approve or deny their respective applications and the key issues and questions that arose during the review process. A decision by the Board to deny an application may not be appealed, but does not prohibit resubmission of a concept paper based on that application in a subsequent round of funding. The Institute will also notify the designated State contact listed in appendix A when grants are approved by the Board to support projects that will be conducted by or involve courts in their State.

F. Response to Notification of Approval

Applicants have 30 days from the date of the letter notifying them that the Board has approved their application to respond to any revisions requested by the Board. If the requested revisions (or a reasonable schedule for submitting such revisions) has not been submitted to the Institute within 30 days after notification, the approval will be automatically rescinded and the application presented to the Board for reconsideration.

IX. Renewal Funding Procedures and Requirements

The Institute recognizes two types of renewal funding—"continuation grants" and "on-going support grants." Pursuant to the procedures and requirements set forth below, the Board may, in its discretion and subject to the availability of funds, consider requests for renewal funding at times other than those set for new projects in sections VI. and VIII.

A. Continuation Grants

1. *Purpose and Scope.* "Continuation grants" are intended to support projects

with a limited duration that involve the same type of activities as the previous project. They are intended to enhance the specific program or service produced or established during the prior grant period. They may be used, for example, when a project is divided into two or more sequential phases, for secondary analysis of data obtained in an Institute-supported research project, or for more extensive testing of an innovative technology, procedure, or program developed with SJI grant support.

In order for a project to be considered for continuation funding, the grantee must have completed the project tasks and met all grant requirements and conditions in a timely manner, absent extenuating circumstances or prior Institute approval of changes to the project design. Continuation grants are not intended to provide support for a project for which the grantee has underestimated the amount of time or funds needed to accomplish the project tasks.

2. *Application Procedures—Letters of Intent.* In lieu of a concept paper, a grantee seeking a continuation grant must inform the Institute, by letter, of its intent to submit an application for such funding as soon as the need for renewal funding becomes apparent but no less than 120 days before the end of the current grant period.

a. A letter of intent must be no more than 3 single-spaced pages on 8½ by 11 inch paper and must contain a concise but thorough explanation of the need for continuation; an estimate of the funds to be requested; and a brief description of anticipated changes in scope, focus or audience of the project.

b. Letters of intent will not be reviewed competitively. Institute staff will review the proposed activities for the next project period and, within 30 days of receiving a letter of intent, inform the grantee of specific issues to be addressed in the continuation application and the date by which the application for a continuation grant must be submitted.

3. *Application Format.* An application for a continuation grant must include an application form, budget forms (with appropriate documentation), a project abstract conforming to the format set forth in section VII.B., a program narrative, a budget narrative, and certain certifications and assurances.

The program narrative should conform to the length and format requirements set forth in section VII.C. However, rather than the topics listed in section VII.C., the program narrative of an application for a continuation grant should address:

a. *Need for Continuation.* Explain why continuation of the project is necessary to achieve the goals of the project, and how the continuation will benefit the participating courts or the courts community generally. That is, to what extent will the goals and objectives of the project be unfulfilled if the project is not continued, and conversely, how will the findings or results of the project be enhanced by continuing the project?

b. *Report of Current Project Activities.* Discuss the status of all activities conducted during the previous project period, identify any activities that were not completed, and explain why.

c. *Evaluation Findings.* Describe the key findings or recommendations resulting from the evaluation of the project, if they are available, and explain how they will be addressed during the proposed continuation. If the findings are not yet available, provide the date by which they will be submitted to the Institute.

d. *Tasks and Methods.* Describe fully any changes in the tasks to be performed, the methods to be used, the products of the project, the assigned staff, or the grantee's organizational capacity.

e. *Task Schedule.* Present a detailed task schedule and time line for the next project period.

f. *Other Sources of Support.* Indicate why other sources of support are inadequate, inappropriate or unavailable.

g. *Budget and Budget Narrative.* Provide a complete budget and budget narrative conforming to the requirements set forth in paragraph VII.D. Changes in the funding level requested should be discussed in terms of corresponding increases or decreases in the scope of activities or services to be rendered.

4. *References to Previously Submitted Material.* An application for a continuation grant should not repeat information contained in a previously approved application or other previously submitted materials, but should provide specific references to such materials where appropriate.

5. *Submission Requirements, Review and Approval Process, and Notification of Decision.* The submission requirements set forth in section VII.E., other than the deadline for mailing, apply to applications for a continuation grant. Such applications will be rated on the selection criteria set forth in section VIII.B. The key findings and recommendations resulting from an evaluation of the project and the proposed response to those findings and recommendations will also be considered. The review and approval process, return policy, and notification procedures are the same as those for new projects set forth in sections VIII.C.–VIII.E.

B. On-going Support Grants

1. *Purpose and Scope.* On-going support grants are intended to support projects that are national in scope and that provides the State courts with services, programs or products for which there is a continuing important need. An on-going support grant may also be used to fund longitudinal research that directly benefits the State courts. On-going support grants are subject to the limits on size and duration set forth in V.B.2 and V.C.2. A project is eligible for consideration for an on-going support grant if:

a. The project is supported by and has been evaluated under a grant from the Institute;

b. The project is national in scope and provides a significant benefit to the State courts;

c. There is a continuing important need for the services, programs or products provided by the project as indicated by the level of use and support by members of the court community;

d. The project is accomplishing its objectives in an effective and efficient manner; and

e. It is likely that the service or program provided by the project would be curtailed or significantly reduced without Institute support.

Each project supported by an on-going support grant must include an evaluation component assessing its effectiveness and operation throughout the grant period. The evaluation should be independent, but may be designed collaboratively by the evaluator and the grantee. The design should call for regular feedback from the evaluator to the grantee throughout the project period concerning recommendations for midcourse corrections or improvement of the project, as well as periodic reports to the Institute at relevant points in the project.

An interim evaluation report must be submitted 18 months into the grant period. The decision to obligate Institute funds to support the third year of the project will be based on the interim evaluation findings and the applicant's response to any deficiencies noted in the report.

A final evaluation assessing the effectiveness, operation of, and continuing need for the project must be submitted 90 days before the end of the three-year project period.

In addition, a detailed annual task schedule must be submitted not later

than 45 days before the end of the first and second years of the grant period, along with an explanation of any necessary revisions in the projected costs for the remainder of the project period.

2. *Application Procedures—Letters of Intent.* The Board will consider awarding an on-going support grant for a period of up to 36 months. The total amount of the grant will be fixed at the time of the initial award. Funds ordinarily will be made available in annual increments as specified in section V.B.2.

In lieu of a concept paper, a grantee seeking an on-going support grant must inform the Institute, by letter, of its intent to submit an application for such funding as soon as the need for renewal funding becomes apparent but not less than 120 days before the end of the current grant period. The letter of intent should be in the same format as that prescribed for continuation grants in section IX.A.2.a.

3. *Application Procedures and Format.* An application for an on-going support grant must include an application form, budget forms (with appropriate documentation), a project abstract conforming to the format set forth in section VII.B., a program narrative, a budget narrative, and certain certifications and assurances.

The program narrative should conform to the length and format requirements set forth in section VII.C. However, rather than the topics listed in section VII.C., the program narrative of applications for on-going support grants should address:

a. *Description of Need for and Benefits of the Project.* Provide a detailed discussion of the benefits provided by the project to the State courts around the country, including the degree to which State courts, State court judges, or State court managers and personnel are using the services or programs provided by the project.

b. *Demonstration of Court Support.* Demonstrate support for the continuation of the project from the courts community.

c. *Report on Current Project Activities.* Discuss the extent to which the project has met its goals and objectives, identify any activities that have not been completed, and explain why.

d. *Evaluation Findings.* Attach a copy of the final evaluation report regarding the effectiveness and operation of the project, specify the key findings or recommendations resulting from the evaluation, and explain how they will be addressed during the proposed renewal period.

e. *Tasks and Methods.* Describe fully any changes in the tasks to be performed, the methods to be used, the products of the project, the assigned staff, or the grantee's organizational capacity.

f. *Task Schedule.* Present a general schedule for the full proposed project period and a detailed task schedule for the first year of the proposed new project period.

g. *Other Sources of Support.* Indicate why other sources of support are inadequate, inappropriate or unavailable.

h. *Budget and Budget Narrative.* Provide a complete budget and budget narrative conforming to the requirements set forth in paragraph VII.D. Changes in the funding level requested should be discussed in terms of corresponding increases or decreases in the scope of activities or services to be rendered. A complete budget narrative should be provided for each year, or portion of a year, for which grant support is requested.

4. *References to Previously Submitted Material.* An application for an on-going support grant should not repeat information contained in a previously approved application or other previously submitted materials, but should provide specific references to such materials where appropriate.

5. *Submission Requirements, Review and Approval Process, and Notification of Decision.* The submission requirements set forth in section VII.E., other than the deadline for mailing, apply to applications for an on-going support grant. Such application will be rated on the selection criteria set forth in section VIII.B. The key findings and recommendations resulting from an evaluation of the project and the proposed response to those findings and recommendations will also be considered. The review and approval process, return policy, and notification procedures are the same as those for new projects set forth in sections VIII.C.–VIII.E.

X. Compliance Requirements

The State Justice Institute Act (Pub. L. 98–620, as amended) contains limitations and conditions on grants, contracts and cooperative agreements of which applicants and recipients should be aware. In addition to eligibility requirements which must be met to be considered for an award from the Institute, all applicants should be aware of and all recipients will be responsible for ensuring compliance with the following:

A. State and Local Court Systems

Each application for funding from a State or local court must be approved, consistent with State law, by the State's Supreme Court, or its designated agency or council. The latter shall receive, administer, and be accountable for all funds awarded to such courts. 42 U.S.C. 10705(b)(4). The appendix to this guideline lists the agencies, councils and contact persons designated to administer Institute awards to the State and local courts.

B. Matching Requirements

1. All awards to courts or other units of State or local government (not including publicly supported institutions of higher education) require a match from private or public sources of not less than 50 percent of the total amount of the Institute's award. For example, if the total cost of a project is anticipated to be $150,000, a State court or executive branch agency may request up to $100,000 from the Institute to implement the project. The remaining $50,000 (50% of the $100,000 requested from SJI) must be provided as a match. A cash match, non-cash match, or both may be provided, but the Institute will give preference to those applicants who provide a cash match to the Institute's award. (For a further definition of match, see section III G.)

The requirement to provide match may be waived in exceptionally rare circumstances upon approval of the Chief Justice of the highest court in the State and a majority of the Board of Directors. 42 U.S.C. 10705(d) (as amended).

2. Other eligible recipients of Institute funds are not required to provide a match, but are encouraged to contribute to meeting the costs of the project. In instances where a cash match is proposed, the grantee is responsible for ensuring that the total amount proposed is actually contributed. If a proposed cash match contribution is not fully met, the Institute may reduce the award amount accordingly, in order to maintain the ratio originally provided for in the award agreement (see section VIII.B. above and XI.D).

C. Conflict of Interest

Personnel and other officials connected with Institute-funded programs shall adhere to the following requirements:

1. No official or employee of a recipient court or organization shall participate personally through decision, approval, disapproval, recommendation, the rendering of advice, investigation, or otherwise in any proceeding,

application, request for a ruling or other determination, contract, grant, cooperative agreement, claim, controversy, or other particular matter in which Institute funds are used, where to his/her knowledge he/she or his/her immediate family, partners, organization other than a public agency in which he/she is serving as officer, director, trustee, partner, or employee or any person or organization with whom he/she is negotiating or has any arrangement concerning prospective employment, has a financial interest.

2. In the use of Institute project funds, an official or employee of a recipient court or organization shall avoid any action which might result in or create the appearance of:

a. Using an official position for private gain; or

b. Affecting adversely the confidence of the public in the integrity of the Institute program.

3. Requests for proposals or invitations for bids issued by a recipient of Institute funds or a subgrantee or subcontractor will provide notice to prospective bidders that the contractors who develop or draft specifications, requirements, statements of work and/or requests for proposals for a proposed procurement will be excluded from bidding on or submitting a proposal to compete for the award of such procurement.

D. Lobbying

Funds awarded to recipients by the Institute shall not be used, indirectly or directly, to influence Executive orders or similar promulgations by Federal, State or local agencies, or to influence the passage or defeat of any legislation by Federal, State or local legislative bodies. 42 U.S.C. 10706(a).

It is the policy of the Board of Directors to award funds only to support applications submitted by organizations that would carry out the objectives of their applications in an unbiased manner. Consistent with this policy and the provisions of 42 U.S.C. 10706, the Institute will not knowingly award a grant to an applicant that has, directly or through an entity that is part of the same organization as the applicant, advocated a position before Congress on the specific subject matter of the application.

E. Political Activities

No recipient shall contribute or make available Institute funds, program personnel or equipment to any political party or association, or the campaign of any candidate for public or party office. Recipients are also prohibited from using funds in advocating or opposing any ballot measure, initiative, or referendum. Finally, officers and employees of recipients shall not intentionally identify the Institute or recipients with any partisan or nonpartisan political activity associated with a political party or association, or the campaign of any candidate for public or party office. 42 U.S.C. 10706(a).

F. Advocacy

No funds made available by the Institute may be used to support or conduct training programs for the purpose of advocating particular nonjudicial public policies or encouraging nonjudicial political activities. 42 U.S.C. 10706(b).

G. Supplantation and Construction

To ensure that funds are used to supplement and improve the operation of State courts, rather than to support basic court services, funds shall not be used for the following purposes:

1. To supplant State or local funds supporting a program or activity;

2. To construct court facilities or structures, except to remodel existing facilities or to demonstrate new architectural or technological techniques, or to provide temporary facilities for new personnel or for personnel involved in a demonstration or experimental program; or

3. Solely to purchase equipment.

H. Confidentiality of Information

Except as provided by Federal law other than the State Justice Institute Act, no recipient of financial assistance from SJI may use or reveal any research or statistical information furnished under the Act by any person and identifiable to any specific private person for any purpose other than the purpose for which the information was obtained. Such information and copies thereof shall be immune from legal process, and shall not, without the consent of the person furnishing such information, be admitted as evidence or used for any purpose in any action, suit, or other judicial, legislative, or administrative proceedings.

I. Reporting Requirements

Recipients of Institute funds shall submit Quarterly Progress and Financial Reports within 30 days of the close of each calendar quarter (that is, no later than January 30, April 30, July 30, and October 30). Two copies of each report must be sent. The Quarterly Progress Reports shall include a narrative description of project activities during the calendar quarter, the relationship between those activities and the task schedule and objectives set forth in the approved application or an approved adjustment thereto, any significant problem areas that have developed and how they will be resolved, and the activities scheduled during the next reporting period.

The quarterly financial status report shall be submitted in accordance with section XI.G.2. of this guideline.

J. Audit

Each recipient must provide for an annual fiscal audit. (See section XI.J. of this guideline for the requirements of such audits.)

Accounting principles employed in recording transactions and preparing financial statements must be based upon generally accepted accounting principles (GAAP).

K. Suspension of Funding

After providing a recipient reasonable notice and opportunity to submit written documentation demonstrating why fund termination or suspension should not occur, the Institute may terminate or suspend funding of a project that fails to comply substantially with the Act, Institute guidelines, or the terms and conditions of the award. 42 U.S.C. 10708(a).

L. Title to Property

At the conclusion of the project, title to all expendable and nonexpendable personal property purchased with Institute funds shall vest in the recipient court, organization, or individual that purchased the property if certification is made to the Institute that the property will continue to be used for the authorized purposes of the Institute-funded project or other purposes consistent with the State Justice Institute Act, as approved by the Institute. If such certification is not made or the Institute disapproves such certification, title to all such property with an aggregate or individual value of $1,000 or more shall vest in the Institute, which will direct the disposition of the property.

M. Disclaimer

Recipients of Institute funds shall prominently display the following disclaimer on all project-related products developed with Institute funds:

This [document, film, videotape, etc.] was developed under a [grant, cooperative agreement, contract] from the State Justice Institute. Points of view expressed herein are those of the [author(s), filmmaker(s), etc.] and do not necessarily represent the official position or policies of the State Justice Institute.

N. Copyrights

Except as otherwise provided in the terms and conditions of an Institute award, a recipient is free to copyright any books, publications, or other copyrightable materials developed in the course of an Institute-supported project, but the Institute shall reserve a royalty-free, nonexclusive and irrevocable right to reproduce, publish, or otherwise use, and to authorize others to use, the materials for purposes consistent with the State Justice Institute Act.

O. Inventions and Patents

If any patentable items, patent rights, processes, or inventions are produced in the course of Institute-sponsored work, such fact shall be promptly and fully reported to the Institute. Unless there is a prior agreement between the grantee and the Institute on disposition of such items, the Institute shall determine whether protection of the invention or discovery shall be sought. The Institute will also determine how the rights in the invention or discovery, including rights under any patent issued thereon, shall be allocated and administered in order to protect the public interest consistent with "Government Patent Policy" (President's Memorandum for Heads of Executive Departments and Agencies, August 23, 1971, and statement of Government Patent Policy as printed in 36 FR 16889).

P. Charges for Grant-Related Products

When Institute funds fully cover the cost of developing, producing, and disseminating a product, e.g., a document or software, the product should be distributed to the field without charge. When Institute funds only partially cover the development, production, and dissemination costs, the grantee may recover its costs for reproducing and disseminating the material to those requesting it.

Q. Approval of Key Staff

If the qualifications of an employee or consultant assigned to a key project staff position are not described in the application or if there is a change of a person assigned to such a position, a recipient shall submit a description of the qualifications of the newly assigned person to the Institute. Prior written approval of the qualifications of the new person assigned to a key staff position must be received from the Institute before the salary or consulting fee of that person and associated costs may be paid or reimbursed from grant funds.

XI. Financial Requirements

A. Accounting Systems and Financial Records

All grantees, subgrantees, contractors and other organizations directly or indirectly receiving Institute funds are required to establish and maintain accounting systems and financial records to accurately account for funds they receive. These records shall include total program costs, including Institute funds, State and local matching shares, and any other fund sources included in the approved project budget.

1. *Purpose.* The purpose of this section is to establish accounting system requirements and to offer guidance on procedures which will assist all grantees/subgrantees in:

a. Complying with the statutory requirements for the awarding, disbursement, and accounting of funds;

b. Complying with regulatory requirements of the Institute for the financial management and disposition of funds;

c. Generating financial data which can be used in the planning, management and control of programs; and

d. Facilitating an effective audit of funded programs and projects.

2. *References.* Except where inconsistent with specific provisions of this guideline, the following regulations, directives and reports are applicable to Institute grants and cooperative agreements. These materials supplement the requirements of this section for accounting systems and financial recordkeeping and provide additional guidance on how these requirements may be satisfied.

a. *Office of Management and Budget (OMB) Circular A–21,* Cost Principles for Educational Institutions.

b. *Office of Management and Budget (OMB) Circular A–87,* Cost Principles for State and Local Governments.

c. *Office of Management and Budget (OMB) Circular A–88 (revised).* Indirect Cost Rates, Audit and Audit Followup at Educational Institutions.

d. *Office of Management and Budget (OMB) Circular A–102,* Uniform Administrative Requirements for Grants-in-Aid to State and Local Governments.

e. *Office of Management and Budget (OMB) Circular A–110,* Grants and Agreements with Institutions of Higher Education, Hospitals and other Non-Profit Organizations.

f. *Office of Management and Budget (OMB) Circular A–128,* Audits of State and Local Governments.

g. *Office of Management and Budget (OMB) Circular A–122,* Cost Principles for Non-profit Organizations.

B. Supervision and Monitoring Responsibilities

1. *Grantee Responsibilities.* All grantees receiving direct awards from the Institute are responsible for the management and fiscal control of all funds. Responsibilities include the accounting for receipts and expenditures, the maintaining of adequate financial records and the refunding of expenditures disallowed by audits.

2. *Responsibilities of State Supreme Court.* Each application for funding from a State or local court must be approved, consistent with State law, by the State's Supreme Court, or its designated agency or council.

The State Supreme Court shall receive all Institute funds awarded to such courts and shall be responsible for assuring proper administration of Institute funds. The State Supreme Court is responsible for all aspects of the project, including proper accounting and financial recordkeeping by the subgrantee. The responsibilities include:

a. *Reviewing Financial Operations.* The State Supreme Court should be familiar with, and periodically monitor, its subgrantees' financial operations, records system and procedures. Particular attention should be directed to the maintenance of current financial data.

b. *Recording Financial Activities.* The subgrantee's grant award or contract obligation, as well as cash advances and other financial activities, should be recorded in the financial records of the State Supreme Court in summary form. Subgrantee expenditures should be recorded on the books of the State Supreme Court or evidenced by report forms duly filed by the subgrantee. Non-Institute contributions applied to projects by subgrantees should likewise be recorded, as should any project income resulting from program operations.

c. *Budgeting and Budget Review.* The State Supreme Court should ensure that each subgrantee prepares an adequate budget as the basis for its award commitment. The detail of each project budget should be maintained on file by the State Supreme Court.

d. *Accounting for Non-Institute Contributions.* The State Supreme Court will ensure, in those instances where subgrantees are required to furnish non-Institute matching funds, that the requirements and limitations of this guideline are applied to such funds.

e. *Audit Requirement.* The State Supreme Court is required to ensure that subgrantees have met the necessary audit requirements as set forth by the Institute (see sections X.J. and XI.J).

f. *Reporting Irregularities.* The State Supreme Court and its subgrantees are responsible for promptly reporting to the Institute the nature and circumstances surrounding any financial irregularities discovered.

C. Accounting System

The grantee is responsible for establishing and maintaining an adequate system of accounting and internal controls for itself and for ensuring that an adequate system exists for each of its subgrantees and contractors. An acceptable and adequate accounting system is considered to be one which:

1. Properly accounts for receipt of funds under each grant awarded and the expenditure of funds for each grant by category of expenditure (including matching contributions and project income);

2. Assures that expended funds are applied to the appropriate budget category included within the approved grant;

3. Presents and classifies historical costs of the grant as required for budgetary and evaluation purposes;

4. Provides cost and property controls to assure optimal use of grant funds;

5. Is integrated with a system of internal controls adequate to safeguard the funds and assets covered, check the accuracy and reliability of the accounting data, promote operational efficiency, and assure conformance with any general or special conditions of the grant;

6. Meets the prescribed requirements for periodic financial reporting of operations; and

7. Provides financial data for planning, control, measurement, and evaluation of direct and indirect costs.

D. Total Cost Budgeting and Accounting

Accounting for all funds awarded by the Institute shall be structured and executed on a "total project cost" basis. That is, total project costs, including Institute funds, State and local matching shares, and any other fund sources included in the approved project budget shall be the foundation for fiscal administration and accounting. Grant applications and financial reports require budget and cost estimates on the basis of total costs.

1. *Timing of Matching Contributions.* Matching contributions need not be applied at the exact time of the obligation of Institute funds. However, the full matching share must be obligated by the end of the period for which the Institute funds have been made available for obligation under an approved project. Grantees that do not contemplate making matching contributions continuously throughout the course of a project or on a task-by-task basis, are required to submit a schedule within 30 days after the beginning of the project period indicating at what points during the project period the matching contributions will be made. In instances where a proposed cash match is not fully met, the Institute may reduce the award amount accordingly, in order to maintain the ratio originally provided for in the award agreement.

2. *Records for Match.* All grantees must maintain records which clearly show the source, amount, and timing of all matching contributions. In addition, if a project has included, within its approved budget, contributions which exceed the required matching portion, the grantee must maintain records of those contributions in the same manner as it does the Institute funds and required matching shares. For all grants made to State and local courts, the State Supreme Court has primary responsibility for grantee/subgrantee compliance with the requirements of this section. (See Section XI.B.2.)

E. Maintenance and Retention of Records

All financial records, supporting documents, statistical records and all other records pertinent to grants, subgrants, cooperative agreements or contracts under grants shall be retained by each organization participating in a project for at least three years for purposes of examination and audit. State Supreme Courts may impose record retention and maintenance requirements in addition to those prescribed in this chapter.

1. *Coverage.* The retention requirement extends to books of original entry, source documents supporting accounting transactions, the general ledger, subsidiary ledgers, personnel and payroll records, cancelled checks, and related documents and records. Source documents include copies of all grant and subgrant awards, applications, and required grantee/subgrantee financial and narrative reports. Personnel and payroll records shall include the time and attendance reports for all individuals reimbursed under a grant, subgrant or contract, whether they are employed full-time or part-time. Time and effort reports will be required for consultants.

2. *Retention Period.* The three-year retention period starts from the date of the submission of the final expenditure report or, for grants which are renewed annually, from the date of submission of the annual expenditure report.

3. *Maintenance.* Grantees and subgrantees are expected to see that records of different fiscal years are separately identified and maintained so that requested information can be readily located. Grantees and subgrantees are also obligated to protect records adequately against fire or other damage. When records are stored away from the grantee's/subgrantee's principal office, a written index of the location of stored records should be on hand, and ready access should be assured.

F. Project-Related Income

Records of the receipt and disposition of project-related income must be maintained by the grantee in the same manner as required for the project funds that gave rise to the income. The policies governing the disposition of the various types of project-related income are listed below.

1. *Interest.* A State and any agency or instrumentality of a State including State institutions of higher education and State hospitals, shall not be held accountable for interest earned on advances of project funds. When funds are awarded to subgrantees through a State, the subgrantees are not held accountable for interest earned on advances of project funds. Local units of government and nonprofit organizations that are direct grantees must refund any interest earned. Grantees shall so order their affairs to ensure minimum balances in their respective grant cash accounts.

2. *Royalties.* The grantee/subgrantee may retain all royalties received from copyrights or other works developed under projects or from patents and inventions, unless the terms and conditions of the project provide otherwise.

3. *Registration and tuition fees.* Registration and tuition fees shall be used to pay project-related costs not covered by the grant, or to reduce the amount of grant funds needed to support the project. Registration and tuition fees may be used for other purposes only with the prior written approval of the Institute.

4. *Other.* Other project income shall be treated in accordance with disposition instructions set forth in the project's terms and conditions.

G. Payments and Financial Reporting Requirements

1. *Payment of Grant Funds.* The procedures and regulations set forth below are applicable to all Institute grant funds and grantees.

a. *Request for Advance or Reimbursement of Funds.* Grantees will receive funds on a "Check-Issued" basis. Upon receipt, review, and approval of a Request for Advance or Reimbursement by the Institute, a check will be issued directly to the grantee or its designated fiscal agent. A request must be limited to the grantee's immediate cash needs. The Request for Advance or Reimbursement, along with the instructions for its preparation, will be included in the official Institute award package.

b. *Termination of Advance Funding.* When a grantee organization receiving cash advances from the Institute:

i. Demonstrates an unwillingness or inability to attain program or project goals, or to establish procedures that will minimize the time elapsing between cash advances and disbursements, or cannot adhere to guideline requirements or special conditions;

ii. Engages in the improper award and administration of subgrants or contracts; or

iii. Is unable to submit reliable and/or timely reports,

The Institute may terminate advance financing and require the grantee organization to finance its operations with its own working capital. Payments to the grantee shall then be made by the use of the Institute check method to reimburse the grantee for actual cash disbursements. In the event the grantee continues to be deficient, the Institute reserves the right to suspend payments until the deficiencies are corrected.

c. *Principle of Minimum Cash on Hand.* Recipient organizations should request funds based upon immediate disbursement requirements. Grantees should time their requests to ensure that cash on hand is the minimum needed for disbursements to be made immediately or within a few days. Idle funds in the hands of subgrantees will impair the goals of good cash management.

2. *Financial Reporting.* In order to obtain financial information concerning the use of funds, the Institute requires that grantees/subgrantees of these funds submit timely reports for review.

Two copies of the Financial Status Report are required from all grantees for each active quarter on a calendar-quarter basis. This report is due within 30 days after the close of the calendar quarter. It is designed to provide financial information relating to Institute funds, State and local matching shares, and any other fund sources included in the approved project budget. The report contains information on obligations as well as outlays. A copy of the Financial Status Report, along with instructions for its preparation, will be included in the official Institute Award package. In circumstances where an organization requests substantial payments for a project prior to the completion of a given quarter, the Institute may request a brief summary of the amount requested, by object class, in support of the Request for Advance or Reimbursement.

3. *Consequences of Non-Compliance with Submission Requirements.* Failure of the grantee organization to submit required financial and program reports may result in a suspension of grant payments.

H. Allowability of Costs

1. *General.* Except as may be otherwise provided in the conditions of a particular grant, cost allowability shall be determined in accordance with the principles set forth in OMB Circulars A–87, Cost Principles for State and Local Governments; A–21, Cost Principles Applicable to Grants and Contracts with Educational Institutions; and A–122, Cost Principles for Non-Profit Organizations. No costs may be recovered to liquidate obligations which are incurred after the approved grant period.

2. *Costs Requiring Prior Approval*—a. *Preagreement Costs.* The written prior approval of the Institute is required for costs which are considered necessary to the project but occur prior to the starting date of the grant period.

b. *Equipment.* Grant funds may be used to purchase or lease only that equipment which is essential to accomplishing the goals and objectives of the project. The written prior approval of the Institute is required when the amount of automated data processing (ADP) equipment to be purchased or leased exceeds $10,000 or the software to be purchased exceeds $3,000.

c. *Consultants.* The written prior approval of the Institute is required when the rate of compensation to be paid a consultant exceeds $300 a day.

3. *Travel Costs.* Transportation and per diem rates must comply with the policies of the applicant organization. If the applicant does not have an established written travel policy, then travel rates shall be consistent with those established by the Institute or the Federal Government. Institute funds shall not be used to cover the transportation or per diem costs of a member of a national organization to attend an annual or other regular meeting of that organization.

4. *Indirect Costs.* These are costs of an organization that are not readily assignable to a particular project, but are necessary to the operation of the organization and the performance of the project. The cost of operating and maintaining facilities, depreciation, and administrative salaries are examples of the types of costs that are usually treated as indirect costs. It is the policy of the Institute that all costs should be budgeted directly; however, if a recipient has an indirect cost rate approved by a Federal agency as set forth below, the Institute will accept that rate.

a. *Approved Plan Available.* (i) The Institute will accept an indirect cost rate or allocation plan approved for a grantee during the preceding two years by any Federal granting agency on the basis of allocation methods substantially in accord with those set forth in the applicable cost circulars. A copy of the approved rate agreement must be submitted to the Institute.

(ii) Where flat rates are accepted in lieu of actual indirect costs, grantees may not also charge expenses normally included in overhead pools, e.g., accounting services, legal services, building occupancy and maintenance, etc., as direct costs.

(iii) Organizations with an approved indirect cost rate, utilizing total direct costs as the base, usually exclude contracts under grants from any overhead recovery. The negotiation agreement will stipulate that contracts are excluded from the base for overhead recovery.

b. *Establishment of Indirect Cost Rates.* In order to be reimbursed for indirect costs, a grantee or organization must first establish an appropriate indirect cost rate. To do this, the grantee must prepare an indirect cost rate proposal and submit it to the Institute. The proposal must be submitted in a timely manner (within three months after the start of the grant period) to assure recovery of the full amount of allowable indirect costs, and it must be developed in accordance with principles and procedures appropriate to the type of grantee institution involved.

c. *No Approved Plan.* If an indirect cost proposal for recovery of actual indirect costs is not submitted to the Institute within three months after the start of the grant period, indirect costs will be irrevocably disallowed for all months prior to the month that the indirect cost proposal is received. This policy is effective for all grant awards.

I. Procurement and Property Management Standards

1. *Procurement Standards.* For State and local governments, the Institute is adopting the standards set forth in Attachment O of *OMB Circular A–102.* Institutions of higher education, hospitals, and other nonprofit organizations will be governed by the standards set forth in Attachment O of *OMB Circular A–110.*

2. *Property Management Standards.* The property management standards as prescribed in Attachment N of *OMB Circulars A–102* and *A–110* shall be applicable to all grantees and subgrantees of Institute funds except as provided in subsection b. below.

a. *Acquisition.* All grantees/subgrantees are required to be prudent in the acquisition and management of property with grant funds. If suitable property required for the successful execution of projects is already available within the grantee or subgrantee organization, expenditures of grant funds for the acquisition of new property will be considered unnecessary.

b. *Title to Property.* At the conclusion of the project, title to all expendable and nonexpendable personal property purchased with Institute funds shall vest in the court, organization, or individual that purchased the property if certification is made to the Institute that the property will continue to be used for the authorized purposes of the Institute-funded project or other purposes consistent with the State Justice Institute Act, as approved by the Institute. If such certification is not received, or the Institute disapproves such certification, title to all such property with an aggregate or individual value of $1,000 or more shall vest in the Institute, which will direct the disposition of the property.

J. Audit Requirements.

1. *Audit Objectives.* Grants and other agreements are awarded subject to conditions of fiscal, program and general administration to which the recipient expressly agrees. Accordingly, the audit objective is to review the grantee's or subgrantee's administration of grant funds and required non-Institute contributions for the purpose of determining whether the recipient has:

a. Established an accounting system integrated with adequate internal fiscal and management controls to provide full accountability for revenues, expenditures, assets, and liabilities;

b. Prepared financial statements which are presented fairly, in accordance with generally accepted accounting principles;

c. Prepared Institute financial reports (including Financial Status Reports, Cash Reports, and Requests for Advances and Reimbursements) which contain accurate and reliable financial data, and are presented in accordance with prescribed procedures; and

d. Expended Institute funds in accordance with the terms of applicable agreements and those provisions of Federal law or Institute regulations that could have a material effect on the financial statements or on the awards tested.

2. *Implementation.* Each grantee (including a State or local court receiving a subgrant from the State Supreme Court) shall provide for an annual fiscal audit. The audit may be of the entire grantee organization (e.g., a university) or of the specific project funded by the Institute. The audit shall be conducted by an independent Certified Public Accountant, or a State or local agency authorized to audit government agencies. The audit shall be conducted in compliance with generally accepted auditing standards established by the American Institute of Certified Public Accountants. A written report shall be prepared upon completion of the audit. Grantees are responsible for submitting copies of the reports to the Institute within thirty days after the acceptance of the report by the grantee, for each year that there is financial activity involving Institute funds.

Grantees who receive funds from a Federal agency and who satisfy audit requirements of the cognizant Federal agency, should submit a copy of the audit report prepared for that Federal agency to the Institute in order to satisfy the provisions of this section. Cognizant Federal agencies do not send reports to the Institute. Therefore, each grantee must send this report directly to the Institute.

Audit reports from nonprofit organizations which do not receive Federal funds, and which decide to perform an audit of the entire organization, shall include a supplemental schedule depicting a project-by-project summary of Institute grant activity for the audit period. At a minimum, this summary should include the grant award number, project title, award amount, payments received, expenditures made and balances remaining. The auditors should also conduct adequate tests to ensure that the audit objectives listed in sections XI.J.1.c. and d. above have been satisfied.

3. *Resolution and Clearance of Audit Reports.* Timely action on recommendations by responsible management officials is an integral part of the effectiveness of an audit. Each grant recipient shall have policies and procedures for acting on audit recommendations by designating officials responsible for: follow-up, maintaining a record of the actions taken on recommendations and time schedules, responding to and acting on audit recommendations, and submitting periodic reports to the Institute on recommendations and actions taken.

4. *Consequences of Non-Resolution of Audit Issues.* It is the general policy of the State Justice Institute not to make new grant awards to an applicant having an unresolved audit report involving Institute awards. Failure of the grantee organization to resolve audit questions may also result in the suspension of payments for active Institute grants to that organization.

K. Close-Out of Grants

1. *Definition.* Close-out is a process by which the Institute determines that all applicable administrative and financial actions and all required work of the grant have been completed by both the grantee and the Institute.

2. *Grantee Close-Out Requirements.* Within 90 days after the end date of the grant or any approved extension thereof (revised end date), the following documents must be submitted by the grantee to the Institute.

a. *Financial Status Report.* The final report of expenditures must have no unliquidated obligations and must indicate the exact balance of unobligated funds. Any unobligated/unexpended funds will be deobligated from the award by the Institute. Grantees on a check-issued basis, who have drawn down funds in excess of their obligations/expenditures, must return any unused funds as soon as it is determined that the funds are not required. In no case should any unused funds remain with the grantee beyond the submission date of the final financial status report.

b. *Final Progress Report.* This report should describe the project activities during the final calendar quarter of the project and the closeout period, including to whom project products have been disseminated; specify whether all the objectives set forth in the approved application or an approved adjustment thereto have been met; and, if any of the objectives have not been met explain the reasons therefor.

XII. Grant Adjustments

All requests for program or budget adjustments requiring Institute approval

must be submitted in a timely manner by the project director. All requests for changes from the approved application will be carefully reviewed for both consistency with this guideline and the enhancement of grant goals and objectives.

A. Grant Adjustments Requiring Prior Written Approval

There are several types of grant adjustments which require the prior written approval of the Institute. Examples of these adjustments include:

1. Budget revisions among direct cost categories which exceed or are expected to exceed 5 percent of the approved budget.
2. A change in the scope of work to be performed or the objectives of the project (see section XII.D.).
3. A change in the project site.
4. A change in the project period, such as an extension of the grant period and/or extension of the final financial or progress report deadline (see section XII.E.).
5. Satisfaction of special conditions, if required.
6. A change in or temporary absence of the project director (see sections XII.F. and G.).
7. The assignment of an employee or consultant to a key staff position whose qualifications were not described in the application, or a change of a person assigned to a key project staff position (see section X.Q.).
8. A successor in interest or name change agreements.
9. A transfer or contracting out of grant-supported activities (see section XII.H.).
10. A transfer of the grant to another recipient.
11. Preagreement costs, the purchase of automated data processing equipment and software, and consultant rates, as specified in section XI.H.2.

B. Request for Grant Adjustments

All grantees and subgrantees must promptly notify the SJI program managers, in writing, of events or proposed changes which may require an adjustment from the approved application. In requesting an adjustment, the grantee must set forth the reasons and basis for the proposed adjustment and any other information the SJI program managers determine would help the Institute's review.

C. Notification of Approval/Disapproval

If the request is approved, the grantee will be sent a Grant Adjustment signed by the Executive Director or his/her designee. If the request is denied, the grantee will be sent a written explanation of the reasons for the denial.

D. Changes in the Scope of the Grant

A grantee/sub-grantee may make minor changes in methodology, approach, or other aspects of the grant to expedite achievement of the grant's objectives with subsequent notification of the SJI program manager. Major changes in scope, duration, training methodology, or other significant areas must be approved in advance by the Institute.

E. Date Changes

A request to change or extend the grant period must be made 30 days in advance of the end date of the grant. A request to change or extend the deadline for the final financial report or final progress report must be made 30 days in advance of the report deadline (see section XI.K.2.).

F. Temporary Absence of the Project Director

Whenever absence of the project director is expected to exceed a continuous period of one month, the plans for the conduct of the project director's duties during such absence must be approved in advance by the Institute. This information must be provided in a letter signed by an authorized representative of the grantee/subgrantee at least 30 days before the departure of the project director, or as soon as it is known that the project director will be absent. The grant may be terminated if arrangements are not approved in advance by the Institute.

G. Withdrawal of/Change in Project Director

If the project director relinquishes or expects to relinquish active direction of the project, the Institute must be notified immediately. In such cases, if the grantee/subgrantee wishes to terminate the project, the Institute will forward procedural instructions upon notification of such intent. If the grantee wishes to continue the project under the direction of another individual, a statement of the candidate's qualifications should be sent to the Institute for review and approval. The grant may be terminated if the qualifications of the proposed individual are not approved in advance by the Institute.

H. Transferring or Contracting Out of Grant-Supported Activities

A principal activity of the grant-supported project shall not be transferred or contracted out to another organization without specific prior approval by the Institute. All such arrangements should be formalized in a contract or other written agreement between the parties involved. Copies of the proposed contract or agreement must be submitted for prior approval at the earliest possible time. The contract or agreement must state, at a minimum, the activities to be performed, the time schedule, the policies and procedures to be followed, the dollar limitation of the agreement, and the cost principles to be followed in determining what costs, both direct and indirect, are to be allowed. The contract or other written agreement must not affect the grantee's overall responsibility for the direction of the project and accountability to the Institute.

State Justice Institute Board of Directors

C.C. Torbert, Jr., Chairman, former Chief Justice, Supreme Court of Alabama
John F. Daffron, Jr., Vice Chairman, Judge, Chesterfield, Virginia, Circuit Court
Janice Gradwohl, Secretary, Judge (ret.), County Court, Lincoln, Nebraska
Terrence B. Adamson, Esq., Dow, Lohnes and Albertson, Atlanta, Georgia
Carl F. Bianchi, Administrative Director of the Courts, Idaho Supreme Court
Joseph W. Brown, Esq., Jones, Jones, Close & Brown, Las Vegas, Nevada
James Duke Cameron, Justice, Supreme Court of Arizona
Vivi L. Dilweg, Judge, Brown County Circuit Court, Green Bay, Wisconsin
Malcolm M. Lucas, Chief Justice, Supreme Court of California
Daniel J. Meador, Professor of Law, University of Virginia Law School
Sandra A. O'Connor, States Attorney of Baltimore County, Towson, Maryland
David I. Tevelin, Executive Director (ex officio)

David I. Tevelin,

Executive Director.

Appendix—List of State Contacts Regarding Administration of Institute Grants to State and Local Courts

Mr. Allen L. Tapley, Administrative Director, Administrative Office of the Courts, 817 South Court Street, Montgomery, Alabama 36130, (205) 834–7990
Mr. Arthur H. Snowden II, Administrative Director, Alaska Court System, 303 K Street, Anchorage, Alaska 99501, (907) 264–0547
Mr. William L. McDonald, Administrative Director, Supreme Court of Arizona, 1314 North 3rd Street, Suite 200, Phoenix, Arizona 85004, (602) 255–4359
Mr. James D. Gingerich, Executive Secretary, Arkansas Judicial Department, Justice Building, Little Rock, Arkansas 72201, (501) 371–2295
Mr. William E. Davis, Administrative Director, State Building, 350 McAllister Street, room 3154, San Francisco, California 94102, (415) 557–1581

Mr. James D. Thomas, State Court Administrator, Colorado Judicial Department, 1301 Pennsylvania Street, Suite 300, Denver, Colorado 80203–2416, (303) 861–1111, ext. 585

Mr. Bruce Borre, Director, Research and Planning, Office of the Chief Court Administrator, Drawer N, Station A, Hartford, Connecticut 06106, (203) 722–5836

Mr. Lowell Groundland, Director, Administrative Office of the Courts, Carvel State Office Building, 820 N. French Street, Wilmington, Delaware 19801, (302) 571–2480

Mr. Ulysses Hammond, Executive Officer, Courts of the District of Columbia, 500 Indiana Avenue, NW., Washington, DC 20001, (202) 879–1700

Mr. Kenneth Palmer, State Courts Administrator, Florida State Courts System, Supreme Court Building, Tallahassee, Florida 32399–1900, (904) 488–8621

Mr. Robert L. Doss, Jr., Administrative Director of the Courts, The Judicial Council of Georgia, 244 Washington Street, SW., Suite 500, Atlanta, Georgia 30334, (404) 656–5171

Mr. Perry C. Taitano, Administrative Director, Superior Court of Guam, Judiciary Building, 110 West O'Brien Drive, Agana, Guam 96910, 011 (671) 472–8961 through 8968

Dr. Irwin I. Tanka, Administrative Director of Courts, The Judiciary, Post Office Box 2560, Honolulu, Hawaii 96804, (808) 548–4605

Mr. Carl F. Bianchi, Administrative Director of the Courts, Supreme Court Building, 451 West State Street, Boise, Idaho 83720, (208) 334–2246

Administrative Director of the Courts, Supreme Court Building, Springfield, Illinois 62701–1791, (217) 782–7770

Mr. Bruce A. Kotzan, Executive Director, Supreme Court of Indiana, State House, room 323, Indianapolis, Indiana 46204, (317) 232–2542

Mr. William J. O'Brien, State Court Administrator, Supreme Court of Iowa, State House, Des Moines, Iowa 50319, (515) 281–5241

Mr. Howard P. Schwartz, Judicial Administrator, Kansas Judicial Center, 301 West 10th Street, Topeka, Kansas 66612, (913) 296–4873

Ms. Laura Stammel, Comptroller, Administrative Office of the Courts, 403 Wapping Street, Frankfort, Kentucky 40601, (502) 564–2350

Dr. Hugh M. Collins, Judicial Administrator, Supreme Court of Louisiana, 301 Loyola Avenue, room 109, New Orleans, Louisiana 70112–1887, (504) 568–5747

Mr. Dana R. Baggett, State Court Administrator, Administrative Office of the Courts, P.O. Box 4820, Downtown Station, Portland, Maine 04112, (207) 879–4792

Mr. Robert W. McKeever, State Court Administrator (Acting), Administrative Office of the Courts, Courts of Appeal Building, Rowe Boulevard and Taylor Avenue, Annapolis, Maryland 21401, (301) 974–2141

Honorable Arthur M. Mason, Chief Administrative Justice, The Trial Court, Commonwealth of Massachusetts, 317 New Courthouse, Boston, Massachusetts 02108, (617) 725–8787

Honorable Dorothy Comstock Riley, Chief Justice, Supreme Court of Michigan, Law Building, Post Office Box 30052, Lansing, Michigan 48909, (517) 373–0128

Ms. Sue K. Dosal, State Court Administrator, Supreme Court of Minnesota, 230 State Capitol, St. Paul, Minnesota 55155, (617) 296–2474

Ms. Krista Johns, Director, Center for Court Education and Continuing Studies, Box 879, Oxford, Mississippi 38677, (601) 232–5955

Mr. Ron Larkin, Director of Operations, Office of the State Court Administrator, 1105 R Southwest Blvd., Jefferson City, Missouri 65109, (314) 751–3585

Mr. R. James Oppedahl, State Court Administrator, Montana Supreme Court, Justice Building, room 315, 215 North Sanders, Helena, Montana 59620–3001, (406) 444–2621

Mr. Joseph C. Steele, State Court Administrator, Supreme Court of Nebraska, State Capitol Building, room 1220, Lincoln, Nebraska 68509, (404) 471–2643

Mr. Donald J. Mello, Court Administrator, Administrative Office of the Courts, Capitol Complex, Carson City, Nevada 89710, (702) 885–5076

Director, Administrative Office of the Courts, Supreme Court of New Hampshire, Noble Drive, Concord, New Hampshire 03301, (603) 271–2521

Mr. Robert Lipscher, Administrative Director, Administrative Office of the Courts, CN–037, RJH Justice Complex, Trenton, New Jersey 08625, (609) 984–0275

Mr. Matthew T. Crosson, Chief Administrator of the Courts, Office of Court Administration, 270 Broadway, New York, New York 10007, (913) 431–1930

Mr. Robert L. Lovato, State Court Administrator, Administrative Office of the Courts, Supreme Court of New Mexico, Supreme Court Building, room 25, Sante Fe, New Mexico 87503, (505) 827–4800

Mr. Franklin E. Freeman, Jr., Administrative Director, Administrative Office of the Courts, Post Office Box 2448, Raleigh, North Carolina 27602, (919) 733–7106/7107

Mr. William G. Bohn, State Court Administrator, Supreme Court of North Dakota,State Capitol Building, Bismarck, North Dakota 58505, (701) 224–4216

Mr. Stephan W. Stover, Administrative Director of the Courts, Supreme Court of Ohio, State Office Tower, 30 East Broad Street, Columbus, Ohio 43266–0419, (614) 466–2653

Mr. Howard W. Conyers, Administrative Director, Administrative Office of the Courts, 1915 N. Stiles, Suite 305, Oklahoma City, Oklahoma 73105, (405) 521–2450

Mr. R. William Linden, Jr., State Court Administrator, Supreme Court of Oregon, Supreme Court Building, Salem, Oregon 97310, (503) 378–6046

Mr. Ralph Hunsicker, Administrative Office of Pennsylvania Courts, 407 City Towers, 301 Chestnut Street, Harrisburg, Pennsylvania 17101, (717) 783–7322

Mr. Matthew J. Smith, State Court Administrator, Supreme Court of Rhode Island, 250 Benefit Street, Providence, Rhode Island 02903, (401) 277–3263 or 277–3272

Mr. Louis L. Rosen, Director, South Carolina Court Administration, Post Office Box 50447, Columbia, South Carolina 29250, (803) 758–2961

Honorable George W. Wuest, Chief Justice, Supreme Court of South Dakota, 500 East Capitol Avenue, Pierre, South Dakota 57501, (605) 773–4885

Mr. Cletus W. McWilliams, Executive Secretary, Supreme Court of Tennessee, Supreme Court Building, room 422, Nashville, Tennessee 37219, (615) 741–2687

Mr. C. Raymond Judice, Administrative Director, Office of Court Administration of the Texas Judicial System, Post Office Box 12066, Austin, Texas 78711, (512) 463–1625

Honorable Gordon R. Hall, Chief Justice, Supreme Court of Utah, State Capitol Building, room 332, Salt Lake City, Utah 84114, (801) 533–5285

Mr. Thomas J. Lehner, Court Administrator, Supreme Court of Vermont, 111 State Street, Montpelier, Vermont 05602, (802) 828–3281

Ms. Viola E. Smith, Clerk of the Court/ Administrator, Territorial Court of the Virgin Islands, Post Office Box 70, Charlotte Amalie, St. Thomas, Virgin Islands 00801, (809) 774–6680, ext. 248

Mr. Robert N. Baldwin, Executive Secretary, Supreme Court of Virginia, Administrative Offices, 100 North Ninth Street, 3rd Floor, Richmond, Virginia 23219, (804) 786–6455

Ms. Mary McQueen, State Court Administrator for the Courts, Supreme Court of Washington, Highways-Licensing Building, 6th Floor, 12th & Washington, Olympia, Washington 98504, (206) 753–5780

Mr. Ted J. Philyaw, Administrative Director of the Courts, Administrative Office, 402–E State Capitol, Charleston, West Virginia 25305, (304) 348–0145

Mr. J. Denis Moran, Director of State Courts, Post Office Box 1688, Madison, Wisconsin 53701–1688, (608) 266–6828

Justice Walter Urbigkit, Supreme Court of Wyoming, Supreme Court Building, Cheyenne, Wyoming 82002, (307) 777–7571

[FR Doc. 90–18185 Filed 8–3–90; 8:45 am]

BILLING CODE 6820–SC–M

federal register

Monday
August 6, 1990

Part VII

Department of Transportation

Federal Aviation Administration

14 CFR Part 71

Proposed Establishment of Harlingen Airport Radar Service Area, Texas; Notice of Proposed Rulemaking

DEPARTMENT OF TRANSPORTATION

Federal Aviation Administration

14 CFR Part 71

[Airspace Docket No. 90-AWA-6]

Proposed Establishment of the Harlingen Airport Radar Service Area, TX

AGENCY: Federal Aviation Administration (FAA), DOT.

ACTION: Notice of proposed rulemaking.

SUMMARY: This notice proposes to establish an Airport Radar Service Area (ARSA) at Harlingen, TX, Airport. Rio Grande Valley International Airport is a public airport with an operating control tower served by a Level III Radar Approach Control Facility. Establishment of this ARSA would require that pilots maintain two-way radio communication with air traffic control (ATC) while in the ARSA. Implementation of ARSA procedures at the affected location would promote the efficient control of air traffic and reduce the risk of midair collision in terminal areas.

DATES: Comments must be received on or before October 2, 1990.

ADDRESSES: Send comments on the proposal in triplicate to: Federal Aviation Administration, Office of the Chief Counsel, Attention: Rules Docket [AGC-10], Airspace Docket No. 90-AWA-6, 800 Independence Avenue SW., Washington, DC 20591.

The official docket may be examined in the Rules Docket, weekdays, except Federal holidays, between 8:30 a.m. and 5 p.m. The FAA Rules Docket is located in the Office of the Chief Counsel, room 916, 800 Independence Avenue SW., Washington, DC.

The informal docket may also be examined during normal business hours at the office of the Regional Air Traffic Division.

FOR FURTHER INFORMATION CONTACT: Lewis W. Still, Airspace and Obstruction Evaluation Branch (ATP-240), Airspace-Rules and Aeronautical Information Division, Air Traffic Rules and Procedures Service, Federal Aviation Administration, 800 Independence Avenue SW., Washington, DC 20591; telephone: (202) 267-9250.

SUPPLEMENTARY INFORMATION:

Comments Invited

Interested parties are invited to participate in this proposed rulemaking by submitting such written data, views, or arguments as they may desire. Comments that provide the factual basis supporting the views and suggestions presented are particularly helpful in developing reasoned regulatory decisions on the proposal. Comments are specifically invited on the overall regulatory, economic, environmental, and energy aspects of the proposal. Communications should identify the airspace docket and be submitted in triplicate to the address listed above. Commenters wishing the FAA to acknowledge receipt of their comments on this notice must submit with those comments a self-addressed, stamped postcard on which the following statement is made: "Comments to Airspace Docket No. 90-AWA-6." The postcard will be date/time stamped and returned to the commenter. All communications received before the specified closing date for comments will be considered before taking action on the proposed rule. The proposal contained in this notice may be changed in the light of comments received. All comments submitted will be available for examination in the Rules Docket both before and after the closing date for comments. A report summarizing each substantive public contact with FAA personnel concerned with this rulemaking will be filed in the docket.

Availability of NPRM's

Any person may obtain a copy of this Notice of Proposed Rulemaking (NPRM) by submitting a request to the Federal Aviation Administration, Office of Public Affairs, Attention: Public Inquiry Center, APA-230, 800 Independence Avenue SW., Washington, DC 20591, or by calling (202) 267-3484. Communications must identify the notice number of this NPRM. Persons interested in being placed on a mailing list for future NPRM's should also request a copy of Advisory Circular No. 11-2A which describes the application procedure.

Background

On April 22, 1982, the National Airspace Review (NAR) was published in the **Federal Register** (47 FR 17448). The plan encompassed a review of airspace use and procedural aspects of the ATC system. Among the main objectives of the NAR was the improvement of the ATC system by increasing efficiency and reducing complexity. In its review of terminal airspace, NAR Task Group 1-2 concluded that Terminal Radar Service Areas (TRSA's) should be replaced. Four types of airspace configurations were considered as replacement candidates, of which Model B, since redesignated ARSA, was recommended by a consensus.

The FAA published NAR Recommendation 1-2.2.1, "Replace Terminal Radar Service Areas with Model B Airspace and Service," in Notice 83-9 (July 28, 1983; 48 FR 34286) proposing the establishment of ARSA's at the Robert Mueller Municipal Airport, Austin, TX, and the Port of Columbus International Airport, Columbus, OH. ARSA's were designated at these airports on a temporary basis by SFAR No. 45 (October 28, 1983; 48 FR 50038) in order to provide an operational confirmation of the ARSA concept for potential application on a national basis.

Following a confirmation period of more than a year, the FAA adopted the NAR recommendation and, on February 27, 1985, issued a final rule (50 FR 9252; March 6, 1985) defining an ARSA and establishing air traffic rules for operation within such an area. Concurrently, by separate rulemaking action, ARSA's were permanently established at the Austin, TX; Columbus, OH; and the Baltimore/Washington International Airports (50 FR 9250; March 6, 1985). The FAA has stated that future notices would propose ARSA's for other airports at which TRSA procedures are in effect.

Additionally, the NAR Task Group recommended that the FAA develop quantitative criteria for proposing to establish ARSA's at locations other than those which are included in the TRSA replacement program. The task group recommended that these criteria include among other things, traffic mix, flow and density, airport configuration, geographical features, collision risk assessment, and ATC capabilities to provide service to users. These criteria have been developed and are published via the FAA directives system.

The FAA has established ARSA's at 124 locations under a paced implementation plan to replace TRSA's with ARSA's. This is one of a series of notices to implement ARSA's at locations with TRSA's or locations without TRSA's which warrant implementation of an ARSA. This notice proposes and ARSA designation at one of the locations identified as a candidate for an ARSA in the preamble to Amendment No. 71-10 (50 FR 9252). Other candidate locations will be proposed in future notices published in the **Federal Register**.

The Current Situation at the Proposed ARSA Location

Rio Grande Valley International Airport is a public airport with an

operating control tower served by a Level III Radar Approach Control Facility. The airport operations at this airport are quite varied as to the mix of aircraft. Aircraft speeds range from the extremely slow to the maximum speed allowed under regulations with varying maneuverability. Participation by pilots operating under visual flight rules (VFR) is voluntary, although pilots are urged to participate. This level of service is known as Stage II and is provided at some locations not identified as TRSA's. Based on the NAR Task Group's recommendations the FAA established numerical criteria to allow airports having particular safety, traffic, and other needs to become ARSA candidates, regardless of whether such airports were encompassed by TRSA's. Rio Grande Valley International Airport is in this category of airports.

Rio Grande Valley International Airport is rapidly becoming more heavily used by numerous air carrier and air taxi operators.

The NAR Task Group stated that, because of the different levels of service offered in terminal areas such as Rio Grande Valley International Airport, users are not always sure of what restrictions or privileges exist, or how to cope with them. Stage II services offered at Rio Grade Valley International Airport include traffic advisories and sequencing to the runway, but do not include conflict resolution in the terminal airspace. Participation in Stage II Services is strictly voluntary. The only service available outside the airport traffic area (ATA) is separation for instrument flight rules (IFR) traffic and VFR traffic advisories as an additional service. Some believe that the voluntary nature of Stage II at airports with moderate traffic levels does not adequately address the problems associated with nonparticipating aircraft operating in relative proximity to the airport and its associated approach and departure courses. There is strong advocacy among user organizations that, within a given standard airspace designation, a terminal radar facility should provide all pilots with the same level of service, and in the same manner, to the extent that this is feasible.

The Proposal

The FAA is considering an amendment to part 71 to the Federal Aviation Regulations (14 CFR part 71) to establish an ARSA at Rio Grande Valley International Airport, Harlingen, TX. This location is a public airport with an operating control tower served by a Level III Radar Approach Control Facility.

The FAA has published a final rule (50 FR 9252; March 6, 1985) which defines an ARSA and prescribes operating rules for aircraft, ultralight vehicles, and parachute jump operations in airspace designated as an ARSA.

The final rule provides, in part, that all aircraft arriving at any airport in an ARSA or flying through an ARSA, prior to entering the ARSA, must: (1) Establish two-way radio communications with the ATC facility having jurisdiction over the area; and (2) while in the ARSA, maintain two-way radio communications with that ATC facility. For aircraft departing from the primary airport within the ARSA, two-way radio communications must be maintained with the ATC facility having jurisdiction over the area. For aircraft departing a satellite airport within the ARSA, two-way radio communications must be established with the ATC facility having jurisdiction over the area as soon as practicable after takeoff and thereafter maintained while operating within the ARSA.

All aircraft operating within an ARSA are required to comply with all ATC clearances and instructions. However, the rule permits ATC to authorize appropriate deviations from any of the operating requirements of the rule when safety considerations justify the deviation or more efficient utilization of the airspace can be attained. Ultralight vehicle operations and parachute jumps in an ARSA may only be conducted under the terms of an ATC authorization.

The FAA adopted the NAR Task Group recommendation that each ARSA be of the same airspace configuration insofar as is practicable. The standard ARSA consists of airspace within 5 nautical miles of the primary airport, extending from the surface to an altitude of 4,000 feet above the airport's elevation, and that airspace between 5 and 10 nautical miles from the primary airport from 1,200 feet above the surface to an altitude of 4,000 feet above that airport's elevation. Proposed deviations from this standard have been necessary at some airports because of adjacent regulatory airspace, international boundaries, topography, or unusual operational requirements.

Definitions, operating requirements, and specific airspace designations applicable to ARSA's may be found in §§ 71.14 and 71.501 of part 71 and §§ 91.1 and 91.88 of part 91 of the Federal Aviation Regulations (14 CFR parts 71, 91).

Regulatory Evaluation

This section summarizes the full regulatory evaluation prepared by the FAA which provides more detailed information on estimates of the potential economic consequences of this proposal rule. This summary and the full evaluation quantify, to the extent practicable, estimated costs of the proposal to the private sector, consumers, and Federal, State and local governments, and also the anticipated benefits.

Executive Order 12291 dated February 17, 1981, directs Federal agencies to promulgate new regulations or modify existing regulations only if potential benefits to society for each regulatory change outweigh potential costs. The order also requires the preparation of a Regulatory Impact Analysis of all "major" rules except those responding to emergency situations or other narrowly defined exigencies. A "major" rule is one that is likely to result in an annual effect on the economy of $100 million or more, a major increase in consumer costs, or a significant adverse effect on competition.

The FAA has determined that this rule is not "major" as defined in the executive order. Therefore, a full regulatory impact analysis, which includes the identification and evaluation of cost-reducing alternatives to the proposal, has not been prepared. Instead, the agency has prepared a more concise document termed a "regulatory evaluation," which analyzes only this proposed rule without identifying alternatives. In addition to a summary of the regulatory evaluation, this section also contains a final regulatory flexibility determination required by the 1980 Regulatory Flexibility Act (Pub. L. 96–354), and an international trade impact assessment. If the reader desires more detailed economic information than this summary contains, then he or she should consult the full regulatory evaluation contained in the docket.

Costs

The FAA has determined that the establishment of the proposed Harlingen ARSA would only impose a one-time negligible cost ($450, discounted, 1987 dollars) to the agency and no additional cost to the aviation community (namely, aircraft operators and fixed-base operators). This assessment is based on the rationale provided for each of the following potential costs associated with implementation of the proposed ARSA:

1. Air traffic controller staffing, controller training, and facility equipment costs incurred by the FAA.

For this NPRM, the FAA does not expect to incur any additional costs for air traffic controller staffing, controller

training, on facility equipment. The FAA contends that it can handle any additional traffic that would participate in radar services at ARSA's through more efficient use of personnel at current authorized staffing level.

The FAA expects to be able to train its controller force in ARSA procedures during regularly scheduled briefing sessions routinely held at Harlingen and Corpus Christi (and all other ARSA facilities). Therefore, no additional training costs are expected to result from implementation of the proposed ARSA at Harlingen (and the ARSA program in general). Because the Harlingen Airport currently provides Stage II service and already has terminal radar systems installed, it would not be necessary to procure additional equipment. For the ARSA program in general, modification of the computer software used to operate radar equipment may be necessary and, in some instances, previously adopted plans to replace or modify older existing equipment may be rescheduled to accommodate the ARSA program. However, no significant additional equipment requirements are anticipated. Essentially, the FAA would be modifying its terminal radar procedures in the ARSA program in a manner that would make more efficient use of existing resources.

An example of the ARSA program's promotion of more efficient resource utilization is the installation of a new generation of radar called the ASR–9 in Harlingen, TX. Although the radar itself is located in Harlingen, its operation and control have been remoted to Corpus Christi, TX. This is because Corpus Christi ATC already has the necessary air traffic facilities and experienced personnel to provide ARSA service. Corpus Christi is currently served by an established Level III radar approach control and an ARSA at Corpus Christi International Airport. In addition, Corpus Christi ATC currently provides Stage II services at Harlingen (HRL) and other area airports. If the proposal becomes a final rule, Corpus Christi ATC would also provide ARSA services at HRL without the need for additional resources.

Because of the experience Corpus Christi ATC has had with ARSA operations, the FAA expects no additional staffing, training, or equipment costs as a result of the proposed ARSA at Harlingen.

2. Costs associated with the revision of charts, notification of the public, and pilot education.

Establishment of ARSA's throughout the country have made it necessary, and will continue to make it necessary, to revise sectional charts to remove existing airspace depictions and incorporate the new ARSA airspace boundaries. The current FAA practice is to revise these sectionals every six months. Changes of the type required to depict an ARSA are made routinely during charting cycles, and can be considered an ordinary cost of doing business. Therefore, the FAA does not expect to incur any additional charting costs as a result of the establishment of the Harlingen ARSA. Pilots would obtain charts depicting ARSA's as they are published during the charting cycles. Because pilots are already required to use current charts, they also would not incur any additional costs. The FAA will hold an informal public meeting at each location where an ARSA is proposed. These meetings provide pilots with the best opportunity to learn both how an ARSA works and how it would affect their local operations. The expenses associated with these public meetings will be incurred regardless of whether an ARSA is ultimately established. Thus, they are more appropriately considered routine costs attributed to the rulemaking process rather than costs of the ARSA program. Nevertheless, if the proposed Harlingen ARSA were to become a final rule, any subsequent public information costs would be attributed to the proposal. For instance, if the proposed Harlinger ARSA were to be established, the FAA would distribute a Letter to Airmen to all pilots residing within 50 miles of the ARSA site. This letter would explain the operation and airspace configuration of the ARSA. The FAA would also issue an Advisory Circular on the Harlingen ARSA. The combined Letter to Airmen and prorated Advisory Circular costs for the Harlingen ARSA would be approximately $450 (discounted). This one-time negligible cost would be incurred upon initial establishment of the proposed ARSA.

For the ARSA program in general, FAA district offices throughout the country conduct aviation safety seminars. These seminars are regularly provided by the FAA to discuss a variety of aviation safety issues, including ARSA's, and do not involve additional costs strictly as a result of the ARSA program. Additionally, no significant costs are expected to be incurred as a result of the follow-up user meetings that are held at each site following implementation of the ARSA. The FAA organizes these meetings to get feedback from users on local ARSA operations. The meetings are held at public or other facilities and are provided free of charge or at a nominal cost. Because local FAA facility personnel conduct these meetings, no travel, per diem, or overtime costs are incurred by regional or headquarters personnel.

3. Additional operating costs for circumnavigating or overflying an ARSA.

The FAA anticipates that some pilots who currently transit the terminal area without establishing radio communications or participating in Stage II services may choose to circumnavigate the proposal ARSA. However, the FAA contends that these operators could circumnavigate the ARSA without significantly deviating from their regular flight path. They could also fly above the ceiling (4,000 feet MSL) or under the floor (1,200 feet AGL) to remain clear of the ARSA. Because of this relatively short distance, the FAA estimates that the proposed rule would have a minimal, if any, cost impact on general aviation (GA) aircraft operations.

4. Delay costs resulting from operations within an ARSA.

The FAA recognizes that the potential exists for delays to develop at HRL following establishment of an ARSA. The additional traffic that ATC would be handling as a result of the mandatory participation requirement may result in minor delays to aircraft operations. The FAA does not expect such delays to be significant. The flexibility afforded controllers in handling traffic as a result of the separation standards allowed in an ARSA will keep delay problems to a minimum. Those problems that do occur are typically transitional in nature. This has been the experience at the three locations where ARSA's have been in effect for the longest period of time and is the trend at most of the more recently designated ARSA locations. ATC facilities eventually gain the operating experience and knowledge to tailor procedures and allocate resources to take the fullest advantage of the efficiencies that ARSA's permit. A very small number of ARSA sites have encountered situation-specific difficulties in making the transition to an ARSA, and the FAA is attempting to resolve these local problems. However, the FAA does not anticipate that any circumstances exist at HRL that would result in such problems, and it is expected to experience the smooth transition process that has characterized the majority of ARSA sites established to date.

5. The need for some operators to purchase communications avionics.

The FAA does not expect that any operators would find it necessary to install radio transceivers as a result of

the proposal. Aircraft operating to and from HRL already are required to have two-way radio communications capability because of the existing airport traffic area and, therefore, these aircraft operators are not expected to incur any additional costs as a result of this proposed ARSA. Nevertheless, the FAA has made an effort to minimize potential radio installation costs. This would be accomplished by providing cutouts along the floor of the ARSA. In addition, procedural agreements between ATC and affected satellite airports could be used to avoid radio installation costs.

6. Miscellaneous costs.

Special situations might exist where establishment of the proposed ARSA could impose certain costs on users. Some of the users and activities that may be affected are local fixed-base operators and airport operators, flight training, crop dusting, soaring, ballooning, parachuting, ultralight operators, and banner towing operators. However, the FAA may employ exclusions, cutouts, and special procedures to alleviate any adverse impacts. The FAA may also develop special procedures to accommodate these activities through local agreements between ATC and the affected organizations. For these reasons, the FAA does not expect any such adverse impacts to occur as a result of this proposal.

7. Mode C and TCAS Rules

If the proposed Harlingen ARSA becomes a final rule, it would be subject to the "Transponder with Automatic Altitude Reporting Capability Requirement (Mode C)" (53 FR 23356, June 21, 1988). Phase II of the Mode C Rule goes into effect for ARSA's on December 30, 1990. It states that all aircraft must be equipped with an operable transponder with Mode C capability when operating in and above an ARSA. Specifically, the Mode C Rule affects all aircraft operating in an ARSA and in all airspace above an ARSA beginning at the ceiling and extending upward to 10,000 feet MSL within the lateral confines of an ARSA. The requirement also applies to any ARSA designated in the future.

Some aircraft operators may have to acquire (or upgrade to) a Mode C transponder as a result of the proposed ARSA. However, the cost of acquiring a Mode C transponder for all GA aircraft in the U.S. was completely accounted for in the Mode C Rule. The Mode C Rule assumed a worst-case scenario that all operators of GA aircraft without a transponder with Mode C will acquire such equipment. The FAA contends that GA operators will acquire Mode C transponders to avoid having to continually circumnavigate the increasing amount of airspace that requires Mode C transponders. Thus, any Mode C acquisition costs as a result of the proposed Harlingen ARSA or any other ARSA would be attributed entirely to the Mode C Rule.

Also, the FAA has adopted regulations requiring certain aircraft operators to install a traffic alert and collision avoidance system (TCAS, 54 FR 940, January 10, 1989). TCAS allows air carriers to determine the position of other aircraft from the signal emitted by Mode C transponders. TCAS then will issue resolution advisories as to what evasive actions are most appropriate to avoid a collision. The TCAS Rule would have no cost impact on the proposed rule, but it would contribute to the potential benefits. The benefits of the proposed Harlingen ARSA are discussed below.

Benefits

The FAA has determined that the potential benefits of the proposed rule would be enhanced aviation safety (in terms of a lowered likelihood of midair collisions) and improved operational efficiency (in terms of higher air traffic controller productivity with existing resources). These potential benefits are difficult to quantify and express in monetary terms. Thus, such benefits have been analyzed in qualitative terms, as explained in the following sections.

The majority of the potential benefits at the proposed Harlingen ARSA and the ARSA program in general are difficult to quantify and express in monetary terms. Such safety and efficiency benefits are attributed to simplification and standardization of ARSA configurations and operating procedures. ARSA's allow ATC greater flexibility in handling air traffic and enable ATC to move traffic as efficiently as at present, but with increased safety in the form of a reduced likelihood of a midair collision.

The NAR task group found that airspace users, especially GA users, encountered significant problems with terminal radar services. Different levels of radar service offered within terminal areas caused confusion and users were not always certain of what restrictions and privileges existed. The standardization and simplification of the ARSA concept is expected to alleviate many of these problems. In addition, as both pilots and controllers become more familiar with ARSA operating procedures, all IFR and VFR traffic is expected to move as efficiently and expeditiously as it did under Stage II service. These benefits of the ARSA program cannot be specifically attributed to individual airports, but rather will result from the overall improvements in terminal area air traffic control procedures realized as ARSA's are implemented throughout the country. Establishment of an ARSA at Harlingen, TX, would contribute to these overall improvements.

In addition, the proposed ARSA would generate potential safety benefits in the form of a lowered likelihood of near-midair collisions due to increased positive control of airspace around HRL. Because of the proactive nature of the proposed ARSA, the potential safety benefits are difficult to quantify in monetary terms. Proactive means that the FAA acts to prevent a safety problem from occurring when the earliest symptoms appear. These symptoms are the increased volume of passenger enplanements and the increased complexity of aircraft operations at HRL.

The volume of passenger enplanements at HRL have risen dramatically. Enplanements at HRL for 1989 are estimated to be 560,000, up from 297,000 in 1980, and are projected to be 1.15 million by the year 2000. It is this high volume of passenger enplanements that has made HRL eligible to become an ARSA. The number of aircraft operations have also increased. Operations at HRL in 1989 are estimated to be 64,000 and are projected to be 84,000 by the year 2000.

Another symptom is increased complexity of aircraft operations at HRL. Complexity refers to air traffic conditions resulting from a mix of controlled and uncontrolled aircraft. As this mix increases, so does complexity, and as complexity increases, so does the potential for midair collisions. Several factors have lead to this increased complexity at HRL:

Federal Express is expected to make HRL its hub into Mexico and will soon be operating Boeing 727s out of HRL.

U.S. Customs is expected to expand their Port of Entry operations in the near future and is considering establishing their operations base at HRL. The Port of Entry is expected to dramatically increase general aviation traffic over the short run. Local fixed-base operators are expecting an immediate 40 percent increase in their business as a direct result of the Port of Entry.

The Confederate Air Force has its headquarters in Harlingen and presently occupies several hangars at HRL. Harlingen is host to the winter Texas air show and the Confederate air show. The latter generates about 1,000 aircraft

operations a day that are worked by ATC at HRL.

Harlingen is located in the center of a major agricultural belt. Currently, there are approximately 200 crop duster operations daily in the Harlingen area.

Aero Mexico, an air taxi operator, is presently negotiating for service from HRL to several cities in Mexico.

The ARSA program has the potential for reducing the number of near midair collisions (NMAC's). In a study entitled, *Selected Statistics Concerning Pilot Reported Near Midair Collisions (1983–1985),* FAA Office of Aviation Safety—Safety Analysis Division (ASF–200), June 1986, the FAA found that approximately 15 percent of reported NMAC's occur in TRSA airspace. The study found that about half of all NMAC's occur in the 1,000 to 5,000 feet altitude range, closely comparable to the altitudes where pilot participation will be mandatory in the ARSA. The study also found that over 85 percent of NMAC's occur in VFR conditions when visibility is five miles or greater. Finally, the study found that the largest number of NMAC reports are associated with IFR operators under radar control conflicting with VFR traffic during VFR flight conditions below 12,500 feet. The mandatory participation requirements of the ARSA and providing radar services to VFR as well as IFR pilots would help alleviate such conflicts where they are now occurring in TRSA and other non-ARSA airspace.

The NAR task group also reviewed NMAC data for Austin, TX, and Columbus, OH, from 1978 to 1984. They found that the presence of an ARSA would have reduced the probability of occurrence by 38 percent of the reported incidents at Austin, and 33 percent at Columbus. The APO study estimated that the potential for NMAC's could be reduced by about 44 percent. Although no quantifiable benefits can be attributed to a reduction in near midair collisions, near midair and actual midair collisions result from similar causal factors. A reduction in near midair collisions suggests that a reduction in actual midair collisions may also be expected as a result of the ARSA program.

The APO study of the ARSA confirmation sites included a detailed analysis to determine if a reduction in midair collision risk might result from replacing a TRSA with an ARSA. The collision risk analysis was based upon the experience at Columbus because recorded radar data through Automated Radar Terminal System ARTS III–A extraction was available only at Columbus. The study focused on conditions of fairly heavy VFR activity since the ARSA affects procedures used to handle VFR traffic in the terminal radar area. Because the replacement of a TRSA with an ARSA might alter the routes of travel, particularly for aircraft that did not previously participate in the TRSA, the analysis examined the intersections of flight paths before and after the ARSA was installed. The flight path analysis focused on the areas immediately around, under, and over the ARSA, and determined that there was no compression of traffic in this airspace following installation of the ARSA. In the absence of compression, the study concluded that the mandatory participation requirement for all aircraft operating within the ARSA resulted in a 75 percent reduction in midair collision risk.

The FAA has reviewed NTSB midair collision accident records for the period between January 1978 and October 1984. This review indicated that the establishment of an ARSA, in place of a TRSA where these accidents occurred, could greatly reduce the probability of midair collisions. Because the circumstances observed at the Columbus test site may not be the same at other TRSA locations, the 75 percent reduction in midair collision risk measured at Columbus may not be achieved at other ARSA sites. Therefore, the FAA conservatively estimates that national implementation of the ARSA program may result in an average reduction in midair collision risk of only 50 percent at TRSA locations that are replaced with ARSA's. Implementation of ARSAs at high density airports currently providing Stage II radar service will similarly contribute to a reduction in midair collision risk.

Reducing by 50 percent, the one to two midair collisions per year where an ARSA could have made a difference, would result in the prevention of one midair collision nationally every one to two years. The quantifiable benefits of preventing a midair collision can range from less than $150,000, resulting from the prevention of a minor nonfatal accident between GA aircraft, to $300 million or more, resulting from the prevention of a midair collision involving an air carrier aircraft with numerous fatalities. (Note: In order to provide the public and government officials with a benchmark comparison of the expected safety benefits of rulemaking actions over an extended period of time with estimated costs in dollars, the FAA currently uses a minimum value of $1.5 million to statistically represent a human fatality avoided. This value-of-life estimate of $1.5 million is in accordance with guidelines issued by the Office of the Secretary of Transportation dated June 22, 1990).

Ordinarily, the benefit of an incremental reduction in the likelihood of midair collisions from establishing an ARSA would be attributed entirely to the ARSA program. However, an indeterminate amount of the benefits would be credited to the interaction of the proposed Harlingen ARSA (and the ARSA program in general) with the Mode C Rule, which in turn interacts with the TCAS Rule. This is because the benefits of the proposed ARSA, as well as other designated airspace such as Terminal Control Areas (TCA's) that require Mode C transponders, and the Mode C and TCAS rules complement each other in reducing the likelihood of midair collisions. Thus, the potential safety benefits of the ARSA and TCA programs and the Mode C and TCAS Rules are inextricably linked and, subsequently share benefits totaling $1.7 billion in 1987 dollars.

Comparison of Costs and Benefits

The FAA has determined that the proposed rule to establish an ARSA at Harlingen, TX, would impose a negligible administrative cost of $450 to the agency. When this cost estimate of $450 is added to the total cost of $679.4 million of the TCA program and the Mode C and TCAS Rules, they would still be less than their total potential benefits ($1.7 billion). In addition, the proposed rule would not impose any additional cost to the aviation community. The proposed rule would generate potential benefits in the form of enhanced aviation safety and operations efficiency. Thus, the FAA firmly believes that the proposed rule would be cost-beneficial.

International Trade Impact Assessment

The proposal would only affect U.S. terminal airspace operating procedures at and in the vicinity of Harlingen, TX. This proposal would not impose a competitive trade disadvantage to foreign firms from the sale of foreign aviation products or services in the United States. In addition, domestic firms would not incur a competitive trade disadvantage from the sale of United States aviation products or services in foreign countries.

Initial Regulatory Flexibility Determination

The Regulatory Flexibility Act of 1980 (RFA) was enacted by Congress to ensure that small entities are not unnecessarily and disproportionately burdened by government regulations.

Small entities are independently owned and operated small businesses and small not-for-profit organizations. The RFA requires agencies to review rules that may have "a significant economic impact on a substantial number of small entities."

Under FAA Order 2100.14A entitled, *Regulatory Flexibility Criteria and Guidance,* a significant economic impact means annualized net compliance cost to an entity which, when adjusted for inflation, is greater than or equal to the threshold significant cost level for that entity. A substantial number of small entities means a number that is not fewer than 11 and represents more than one-third of the small entities subject to a proposed or existing rule.

For the purpose of this evaluation in particular and the ARSA program in general, the small entities that would be potentially affected by the proposed rule are defined as fixed-base operators, flight schools, agricultural operators, and other small aviation businesses located at satellite airports located within five nautical miles of a potential ARSA center. Participation in the TRSA and radio communication with ATC, prior to this proposal, was voluntary. If this proposal becomes a final rule, participation in the ARSA would be mandatory and businesses at airports located within the five-nautical mile core might be altered or lose customers to airports outside of the five-nautical mile ARSA core. The FAA has endeavored to exclude almost every satellite airport located within the proposed five-nautical mile ring to avoid adversely impacting their operations, and to simplify coordinating ATC responsibilities between the primary and satellite airports. In some cases, the same purposes would be achieved through Letters of Agreement between ATC and the affected airports that establish special procedures for aircraft operators. In this manner, the FAA expects to virtually eliminate any adverse impact on the operations of small satellite airports that could result from the ARSA program. Similarly, the FAA expects to eliminate potential adverse impacts on existing flight-training practice areas, as well as on soaring, ballooning, parachuting, and ultralight and banner towing activities, by developing special procedures that would accommodate these activities through local agreements between ATC facilities and the affected organizations. The FAA has utilized such arrangements extensively in implementing the ARSA's that have been established to date.

The FAA expects that any delay problems that may initially develop following implementation of an ARSA would be transitory. Furthermore, airports that would be affected by the ARSA program represent only a small proportion of all the public use airports in operation within the United States. Thus, small entities of any type that use aircraft in the course of their business would not be adversely impacted.

For these reasons, the FAA certifies that this proposed rule would not result in a significant economic impact on a substantial number of small entities. Therefore, a regulatory flexibility analysis is not required under the terms of the RFA.

Federalism Implications

This proposed regulation would not have a substantial direct effect on the States, on the relationship between the national government and the States, or on the distribution of power and responsibilities among the various levels of government. Therefore, in accordance with Executive Order 12612, preparation of a Federalism assessment is not warranted.

Conclusion

For the reasons discussed under "Regulatory Evaluation" the FAA has determined that this proposed regulation (1) is not a "major rule" under Executive Order 12291; and (2) is not a "signficant rule" under DOT Regulatory Policies and Procedures (44 FR 11034; February 26, 1979).

List of Subjects in 14 CFR Part 71

Aviation safety, Airport radar service areas.

The Proposed Amendment

Accordingly, pursuant to the authority delegated to me, the Federal Aviation Administration proposed to amend part 71 of the Federal Aviation Regulations (14 CFR part 71) as follows:

PART 71—DESIGNATION OF FEDERAL AIRWAYS, AREA LOW ROUTES, CONTROLLED AIRSPACE, AND REPORTING POINTS

1. The authority citation for part 71 continues to reas as follows:

Authority: 49 U.S.C. 1348(a), 1354(a), 1510; Executive Order 10854; 49 U.S.C. 106(g) (Revised Pub. L. 97–449, January 12, 1983); 14 CFR 11.69.

§ 71.501 [Amended]

2. Section 71.501 is amended as follows:

Harlingen, TX [New]

That airspace extending upward from the surface to and including 4,000 feet MSL within a 5-mile radius of the Rio Grande Valley International Airport (lat. 26°13'41" N., long. 97°39'15" W.), excluding that airspace east of the Arroyo Colorado that is north of the Southern Pacific Railroad; and that airspace extending upward from 2,000 feet MSL to 4,000 feet MSL within a 10-mile radius of the airport from Farm Road 1420 and the Arroyo Colorado clockwise to the Southern Pacific Railroad; and that airspace extending upward from 1,300 feet MSL to 4,000 feet MSL to the 10-mile radius of the airport from the Southern Pacific Railroad clockwise to U.S. Highway 83 (Business Route); and that airspace extending upward from 1,500 feet MSL to 4,000 feet MSL from U.S. Highway 83 (Business Route) clockwise to U.S. Highway 77 (Business Route); and that airspace extending upward from 1,200 feet MSL to 4,000 feet MSL from U.S. Highway 77 (Business Route) clockwise to Farm Road 1420.

Issued in Washington, DC, on July 27, 1990.

Jerry W. Ball,

Acting Manager, Airspace-Rules and Aeronautical Information Division.

BILLING CODE 4910-13-M

AIRPORT RADAR SERVICE AREA

HARLINGEN, TEXAS

FIELD ELEVATION - 36 FEET

(Not to be used for navigation)

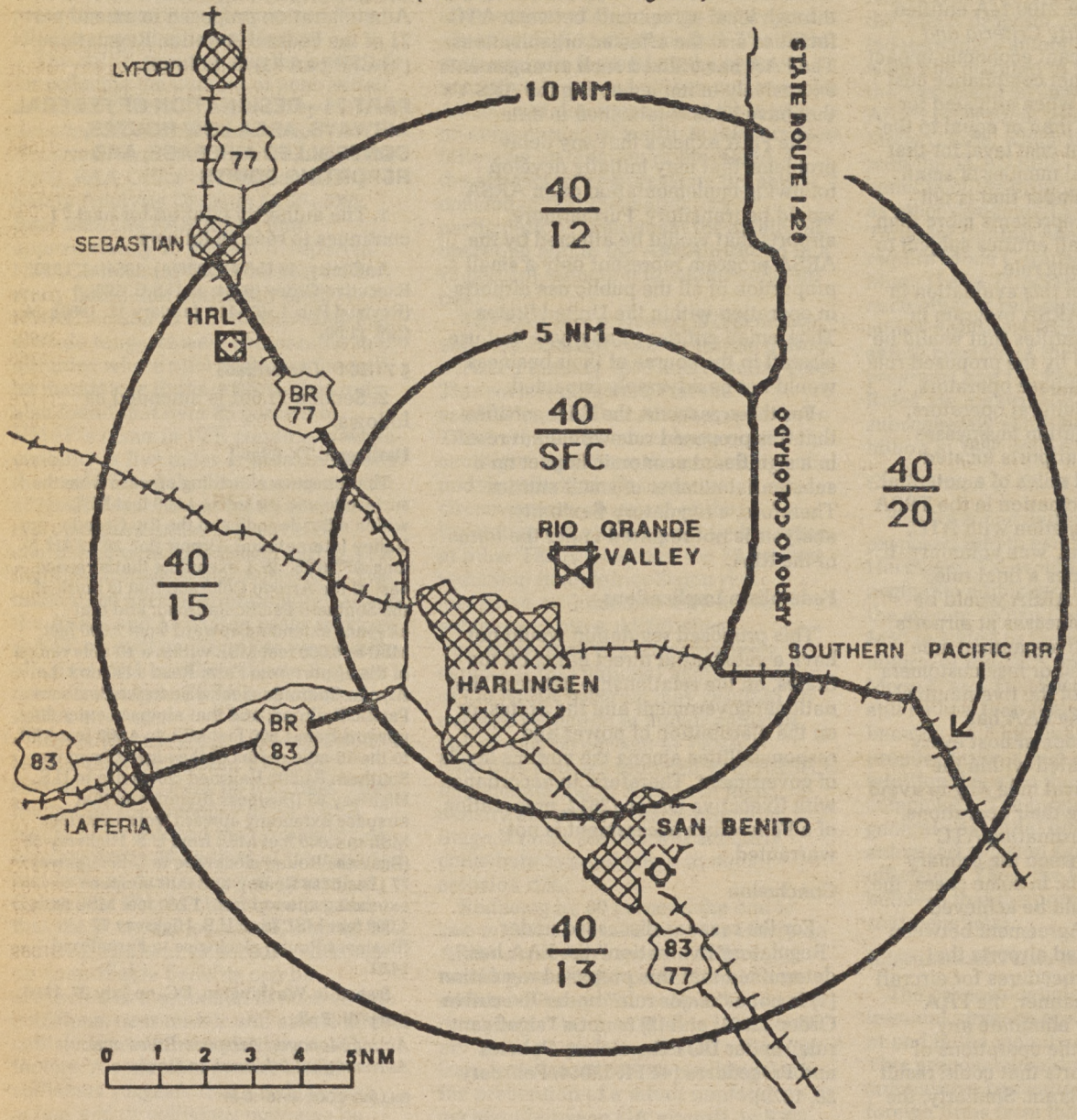

Prepared by the
FEDERAL AVIATION ADMINISTRATION
Cartographic Standards Branch
ATP-220

Reader Aids

Federal Register

Vol. 55, No. 151

Monday, August 6, 1990

INFORMATION AND ASSISTANCE

Federal Register

Index, finding aids & general information	523-5227
Public inspection desk	523-5215
Corrections to published documents	523-5237
Document drafting information	523-5237
Machine readable documents	523-3447

Code of Federal Regulations

Index, finding aids & general information	523-5227
Printing schedules	523-3419

Laws

Public Laws Update Service (numbers, dates, etc.)	523-6641
Additional information	523-5230

Presidential Documents

Executive orders and proclamations	523-5230
Public Papers of the Presidents	523-5230
Weekly Compilation of Presidential Documents	523-5230

The United States Government Manual

General information	523-5230

Other Services

Data base and machine readable specifications	523-3408
Guide to Record Retention Requirements	523-3187
Legal staff	523-4534
Library	523-5240
Privacy Act Compilation	523-3187
Public Laws Update Service (PLUS)	523-6641
TDD for the hearing impaired	523-5229

FEDERAL REGISTER PAGES AND DATES, AUGUST

31175-31350.....1
31351-31570.....2
31371-31808.....3
31809-32070.....6

CFR PARTS AFFECTED DURING AUGUST

At the end of each month, the Office of the Federal Register publishes separately a List of CFR Sections Affected (LSA), which lists parts and sections affected by documents published since the revision date of each title.

3 CFR

Proclamations:
6163.....31567

Executive Orders:
12362 (Revoked by EO 12721).....31349
12585 (Revoked by EO 12721).....31349
12721.....31349
12722.....31803
12723.....31805

5 CFR

430.....31689

Proposed Rules:
550.....31190

7 CFR

278.....31809
910.....31813
1105.....31351
273.....31571
919.....31571
931.....31573
945.....31574

Proposed Rules:
1.....31191
915.....31604
917.....31605
929.....31606

9 CFR

92.....31484
94.....31484
97.....31366
98.....31484
151.....31484

Proposed Rules:
312.....31840
322.....31840
327.....31840
381.....31840

12 CFR

207.....31367
220.....31367
221.....31367
224.....31367
226.....31815
503.....31370

Proposed Rules:
4.....31840

13 CFR

121.....31575

14 CFR

13.....31175
39.....31816, 31821
61.....31300
67.....31300
121.....31564

Proposed Rules:
39.....31393, 31401
71.....32064
77.....31722

15 CFR

767.....31176
771.....31756
772.....31822
774.....31756
786.....31577
788.....31176
799.....31822

Proposed Rules:
944.....31788

16 CFR

803.....31371

Proposed Rules:
453.....31689
1014.....31404

18 CFR

270.....32026
271.....31379

21 CFR

74.....31823, 31824
176.....31824
177.....31824
178.....31826
310.....31776
346.....31776
369.....31776
529.....31481
558.....31827

Proposed Rules:
103.....31689

24 CFR

905.....31178

Proposed Rules:
100.....31191

26 CFR

1.....31380

29 CFR

1910.....31984

Proposed Rules:
1630.....31192

30 CFR

917.....31829

Proposed Rules:
250.....31405
931.....31842, 31843
936.....31844, 31845

31 CFR

500.....31178

515.....31179

32 CFR

199.....31179
287.....31829
806b.....31384

33 CFR

80.....31830
100.....31577
117.....31384
165.....31578
175.....32032
181.....32032
334.....31689

Proposed Rules:

117.....31846

34 CFR

769.....31689

36 CFR

1222.....31982
1228.....31982

38 CFR

4.....31579
21.....31180, 31580
36.....31385

Proposed Rules:

3.....31192
21.....31193
36.....31847

40 CFR

52.....31584, 31590, 31832, 31835
61.....31593
180.....31182, 31184
185.....31182
186.....31182
228.....31593
261.....31387
264.....31387
265.....31387
268.....31387
271.....31387
302.....31387
372.....31594
421.....31594

Proposed Rules:

180.....31194
261.....31849
372.....31342

42 CFR

410.....31185
411.....31185

Proposed Rules:

482.....31196
483.....31196
493.....31758

44 CFR

65.....31836
67.....31835

Proposed Rules:

67.....31855

46 CFR

Proposed Rules:

16.....31297
550.....31199
580.....31199
581.....31199

47 CFR

73.....31188
90.....31598

Proposed Rules:

61.....31858
64.....31859
68.....31859
73.....31202, 31607
87.....31859

48 CFR

801.....31391
871.....31599

49 CFR

1152.....31600

50 CFR

603.....31601
611.....31187
613.....31187
642.....31188
661.....31391
672.....31602
675.....31392

Proposed Rules:

17.....31610, 31612, 31860, 31864
646.....31406

LIST OF PUBLIC LAWS

Note: No public bills which have become law were received by the Office of the Federal Register for inclusion in today's **List of Public Laws.**

Last List August 3, 1990

CFR CHECKLIST

This checklist, prepared by the Office of the Federal Register, is published weekly. It is arranged in the order of CFR titles, prices, and revision dates.

An asterisk (*) precedes each entry that has been issued since last week and which is now available for sale at the Government Printing Office.

A checklist of current CFR volumes comprising a complete CFR set, also appears in the latest issue of the LSA (List of CFR Sections Affected), which is revised monthly.

The annual rate for subscription to all revised volumes is $620.00 domestic, $155.00 additional for foreign mailing.

Order from Superintendent of Documents, Government Printing Office, Washington, DC 20402. Charge orders (VISA, MasterCard, or GPO Deposit Account) may be telephoned to the GPO order desk at (202) 783-3238 from 8:00 a.m. to 4:00 p.m. eastern time, Monday—Friday (except holidays).

Title	Price	Revision Date
1, 2 (2 Reserved)	$11.00	Jan. 1, 1990
3 (1989 Compilation and Parts 100 and 101)	11.00	[1] Jan. 1, 1990
4	16.00	Jan. 1, 1990
5 Parts:		
1–699	15.00	Jan. 1, 1990
700–1199	13.00	Jan. 1, 1990
1200–End, 6 (6 Reserved)	17.00	Jan. 1, 1990
7 Parts:		
0–26	15.00	Jan. 1, 1990
27–45	12.00	Jan. 1, 1990
46–51	17.00	Jan. 1, 1990
52	24.00	Jan. 1, 1990
53–209	19.00	Jan. 1, 1990
210–299	25.00	Jan. 1, 1990
300–399	12.00	Jan. 1, 1990
400–699	20.00	Jan. 1, 1990
700–899	22.00	Jan. 1, 1990
900–999	29.00	Jan. 1, 1990
1000–1059	16.00	Jan. 1, 1990
1060–1119	13.00	Jan. 1, 1990
1120–1199	10.00	Jan. 1, 1990
1200–1499	18.00	Jan. 1, 1990
1500–1899	11.00	Jan. 1, 1990
1900–1939	11.00	Jan. 1, 1990
1940–1949	21.00	Jan. 1, 1990
1950–1999	24.00	Jan. 1, 1990
2000–End	9.50	Jan. 1, 1990
8	14.00	Jan. 1, 1990
9 Parts:		
1–199	20.00	Jan. 1, 1990
200–End	18.00	Jan. 1, 1990
10 Parts:		
0–50	21.00	Jan. 1, 1990
51–199	17.00	Jan. 1, 1990
200–399	13.00	[2] Jan. 1, 1987
400–499	21.00	Jan. 1, 1990
500–End	26.00	Jan. 1, 1990
11	11.00	Jan. 1, 1990
12 Parts:		
1–199	12.00	Jan. 1, 1990
200–219	12.00	Jan. 1, 1990
220–299	21.00	Jan. 1, 1990
300–499	19.00	Jan. 1, 1990
500–599	17.00	Jan. 1, 1990
600–End	17.00	Jan. 1, 1990
13	25.00	Jan. 1, 1990
14 Parts:		
1–59	25.00	Jan. 1, 1990
60–139	24.00	Jan. 1, 1990
140–199	10.00	Jan. 1, 1990
200–1199	21.00	Jan. 1, 1990
1200–End	13.00	Jan. 1, 1990
15 Parts:		
0–299	11.00	Jan. 1, 1990
300–799	22.00	Jan. 1, 1990
800–End	15.00	Jan. 1, 1990
16 Parts:		
0–149	6.00	Jan. 1, 1990
150–999	14.00	Jan. 1, 1990
1000–End	20.00	Jan. 1, 1990
17 Parts:		
1–199	15.00	Apr. 1, 1990
200–239	16.00	Apr. 1, 1990
240–End	23.00	Apr. 1, 1990
18 Parts:		
1–149	16.00	Apr. 1, 1990
150–279	16.00	Apr. 1, 1990
280–399	14.00	Apr. 1, 1990
400–End	9.50	Apr. 1, 1990
19 Parts:		
1–199	28.00	Apr. 1, 1990
200–End	9.50	Apr. 1, 1990
20 Parts:		
1–399	14.00	Apr. 1, 1990
400–499	25.00	Apr. 1, 1990
500–End	28.00	Apr. 1, 1990
21 Parts:		
1–99	13.00	Apr. 1, 1990
100–169	15.00	Apr. 1, 1990
170–199	17.00	Apr. 1, 1990
200–299	5.50	Apr. 1, 1990
300–499	28.00	Apr. 1, 1989
500–599	21.00	Apr. 1, 1990
600–799	8.00	Apr. 1, 1990
800–1299	18.00	Apr. 1, 1990
1300–End	9.00	Apr. 1, 1990
22 Parts:		
1–299	24.00	Apr. 1, 1990
300–End	18.00	Apr. 1, 1990
23	17.00	Apr. 1, 1990
24 Parts:		
0–199	20.00	Apr. 1, 1990
200–499	30.00	Apr. 1, 1990
500–699	13.00	Apr. 1, 1990
*700–1699	24.00	Apr. 1, 1990
1700–End	13.00	Apr. 1, 1990
25	25.00	Apr. 1, 1990
26 Parts:		
§§ 1.0-1–1.60	15.00	Apr. 1, 1990
§§ 1.61–1.169	28.00	Apr. 1, 1990
§§ 1.170–1.300	18.00	Apr. 1, 1990
§§ 1.301–1.400	17.00	Apr. 1, 1990
§§ 1.401–1.500	29.00	Apr. 1, 1990
§§ 1.501–1.640	16.00	[3] Apr. 1, 1989
§§ 1.641–1.850	19.00	Apr. 1, 1990
§§ 1.851–1.907	20.00	Apr. 1, 1990
§§ 1.908–1.1000	22.00	Apr. 1, 1990
§§ 1.1001–1.1400	18.00	Apr. 1,1990
§§ 1.1401–End	24.00	Apr. 1, 1990
2–29	21.00	Apr. 1, 1990
30–39	15.00	Apr. 1, 1990
40–49	13.00	[3] Apr. 1, 1989
50–299	16.00	[3] Apr. 1, 1989
300–499	17.00	Apr. 1, 1990
500–599	6.00	Apr. 1, 1990
600–End	6.50	Apr. 1, 1990
27 Parts:		
1–199	24.00	Apr. 1, 1990
200–End	14.00	Apr. 1, 1990
28	27.00	July 1, 1989

Title	Price	Revision Date
29 Parts:		
0–99	17.00	July 1, 1989
100–499	7.50	July 1, 1989
500–899	26.00	July 1, 1989
900–1899	12.00	July 1, 1989
1900–1910 (§§ 1901.1 to 1910.441)	24.00	July 1, 1989
1910 (§§ 1910.1000 to end)	13.00	July 1, 1989
*1911–1925	9.00	[4] July 1, 1989
1926	11.00	July 1, 1989
1927–End	25.00	July 1, 1989
30 Parts:		
0–199	21.00	July 1, 1989
200–699	14.00	July 1, 1989
700–End	20.00	July 1, 1989
31 Parts:		
0–199	14.00	July 1, 1989
200–End	18.00	July 1, 1989
32 Parts:		
1–39, Vol. I	15.00	[5] July 1, 1984
1–39, Vol. II	19.00	[5] July 1, 1984
1–39, Vol. III	18.00	[5] July 1, 1984
1–189	23.00	July 1, 1989
190–399	28.00	July 1, 1989
400–629	22.00	July 1, 1989
*630–699	13.00	[4] July 1, 1989
700–799	17.00	July 1, 1989
800–End	19.00	July 1, 1989
33 Parts:		
1–199	30.00	July 1, 1989
200–End	20.00	July 1, 1989
34 Parts:		
1–299	22.00	Nov. 1, 1989
300–399	14.00	Nov. 1, 1989
400–End	27.00	Nov. 1, 1989
35	10.00	July 1, 1989
36 Parts:		
1–199	12.00	July 1, 1989
200–End	21.00	July 1, 1989
37	14.00	July 1, 1989
38 Parts:		
0–17	24.00	Sept. 1, 1989
18–End	21.00	Sept. 1, 1989
39	14.00	July 1, 1989
40 Parts:		
1–51	25.00	July 1, 1989
52	25.00	July 1, 1989
53–60	29.00	July 1, 1989
61–80	11.00	July 1, 1989
81–85	11.00	July 1, 1989
86–99	25.00	July 1, 1989
100–149	27.00	July 1, 1989
150–189	21.00	July 1, 1989
190–299	29.00	July 1, 1989
300–399	10.00	July 1, 1989
400–424	23.00	July 1, 1989
*425–699	23.00	[4] July 1, 1989
700–789	15.00	July 1, 1989
790–End	21.00	July 1, 1989
41 Chapters:		
1, 1–1 to 1–10	13.00	[6] July 1, 1984
1, 1–11 to Appendix, 2 (2 Reserved)	13.00	[6] July 1, 1984
3–6	14.00	[6] July 1, 1984
7	6.00	[6] July 1, 1984
8	4.50	[6] July 1, 1984
9	13.00	[6] July 1, 1984
10–17	9.50	[6] July 1, 1984
18, Vol. I, Parts 1–5	13.00	[6] July 1, 1984
18, Vol. II, Parts 6–19	13.00	[6] July 1, 1984
18, Vol. III, Parts 20–52	13.00	[6] July 1, 1984
19–100	13.00	[6] July 1, 1984
1–100	8.00	July 1, 1989

Title	Price	Revision Date
101	24.00	July 1, 1989
102–200	11.00	July 1, 1989
201–End	13.00	July 1, 1989
42 Parts:		
1–60	16.00	Oct. 1, 1989
61–399	6.50	Oct. 1, 1989
400–429	22.00	Oct. 1, 1989
430–End	24.00	Oct. 1, 1989
43 Parts:		
1–999	19.00	Oct. 1, 1989
1000–3999	26.00	Oct. 1, 1989
4000–End	12.00	Oct. 1, 1989
44	22.00	Oct. 1, 1989
45 Parts:		
1–199	16.00	Oct. 1, 1989
200–499	12.00	Oct. 1, 1989
500–1199	24.00	Oct. 1, 1989
1200–End	18.00	Oct. 1, 1989
46 Parts:		
1–40	14.00	Oct. 1, 1989
41–69	15.00	Oct. 1, 1989
70–89	7.50	Oct. 1, 1989
90–139	12.00	Oct. 1, 1989
140–155	13.00	Oct. 1, 1989
156–165	13.00	Oct. 1, 1989
166–199	14.00	Oct. 1, 1989
200–499	20.00	Oct. 1, 1989
500–End	11.00	Oct. 1, 1989
47 Parts:		
0–19	18.00	Oct. 1, 1989
20–39	18.00	Oct. 1, 1989
40–69	9.50	Oct. 1, 1989
70–79	18.00	Oct. 1, 1989
80–End	20.00	Oct. 1, 1989
48 Chapters:		
1 (Parts 1–51)	29.00	Oct. 1, 1989
1 (Parts 52–99)	18.00	Oct. 1, 1989
2 (Parts 201–251)	19.00	Oct. 1, 1989
2 (Parts 252–299)	17.00	Oct. 1, 1989
3–6	19.00	Oct. 1, 1989
7–14	25.00	Oct. 1, 1989
15–End	27.00	Oct. 1, 1989
49 Parts:		
1–99	14.00	Oct. 1, 1989
100–177	28.00	Oct. 1, 1989
178–199	22.00	Oct. 1, 1989
200–399	20.00	Oct. 1, 1989
400–999	25.00	Oct. 1, 1989
1000–1199	18.00	Oct. 1, 1989
1200–End	19.00	Oct. 1, 1989
50 Parts:		
1–199	18.00	Oct. 1, 1989
200–599	15.00	Oct. 1, 1989
600–End	14.00	Oct. 1, 1989
CFR Index and Findings Aids	30.00	Jan. 1, 1990
Complete 1990 CFR set	620.00	1990
Microfiche CFR Edition:		
Complete set (one-time mailing)	115.00	1985
Complete set (one-time mailing)	185.00	1986
Complete set (one-time mailing)	185.00	1987
Subscription (mailed as issued)	185.00	1988
Subscription (mailed as issued)	188.00	1989

Title	Price	Revision Date
Individual copies	2.00	1990

[1] Because Title 3 is an annual compilation, this volume and all previous volumes should be retained as a permanent reference source.

[2] No amendments to this volume were promulgated during the period Jan. 1, 1987 to Dec. 31, 1989. The CFR volume issued January 1, 1987, should be retained.

[3] No amendments to this volume were promulgated during the period Apr. 1, 1989 to Mar. 30, 1990. The CFR volume issued April 1, 1989, should be retained.

[4] No amendments to this volume were promulgated during the period July 1, 1989 to June 30, 1990. The CFR volume issued July 1, 1989, should be retained.

[5] The July 1, 1985 edition of 32 CFR Parts 1–189 contains a note only for Parts 1–39 inclusive. For the full text of the Defense Acquisition Regulations in Parts 1–39, consult the three CFR volumes issued as of July 1, 1984, containing those parts.

[6] The July 1, 1985 edition of 41 CFR Chapters 1–100 contains a note only for Chapters 1 to 49 inclusive. For the full text of procurement regulations in Chapters 1 to 49, consult the eleven CFR volumes issued as of July 1, 1984 containing those chapters.

The authentic text behind the news . . .

The Weekly Compilation of **Presidential Documents**

Administration of George Bush

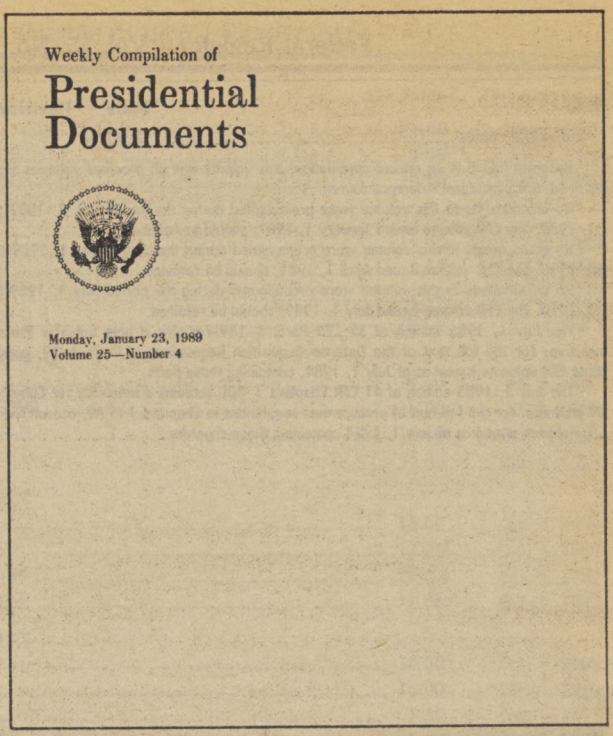

This unique service provides up-to-date information on Presidential policies and announcements. It contains the full text of the President's public speeches, statements, messages to Congress, news conferences, personnel appointments and nominations, and other Presidential materials released by the White House.

The Weekly Compilation carries a Monday dateline and covers materials released during the preceding week. Each issue contains an Index of Contents and a Cumulative Index to Prior Issues.

Separate indexes are published periodically. Other features include lists of acts approved by the President, nominations submitted to the Senate, a checklist of White House press releases, and a digest of other Presidential activities and White House announcements.

Published by the Office of the Federal Register, National Archives and Records Administration.

Superintendent of Documents Subscriptions Order Form

Order Processing Code:
***6466**

Charge your order. It's easy!

MasterCard VISA

Charge orders may be telephoned to the GPO order desk at (202) 783-3238 from 8:00 a.m. to 4:00 p.m. eastern time, Monday-Friday (except holidays)

☐ **YES,** please enter my subscription for one year to the **WEEKLY COMPILATION OF PRESIDENTIAL DOCUMENTS (PD)** so I can keep up to date on Presidential activities.

☐ $96.00 First Class ☐ $55.00 Regular Mail

1. The total cost of my order is $_____. All prices include regular domestic postage and handling and are subject to change. International customers please add 25%.

Please Type or Print

2. _____
(Company or personal name)

_____
(Additional address/attention line)

_____
(Street address)

_____
(City, State, ZIP Code)

(_____) _____
(Daytime phone including area code)

3. Please choose method of payment:

☐ Check payable to the Superintendent of Documents

☐ GPO Deposit Account ☐☐☐☐☐☐☐–☐

☐ VISA or MasterCard Account

☐☐☐☐☐☐☐☐☐☐☐☐☐☐☐☐

_____
(Credit card expiration date)

Thank you for your order!

_____
(Signature)

(Rev. 1-20-89)

4. Mail To: Superintendent of Documents, Government Printing Office, Washington, D.C. 20402-9371

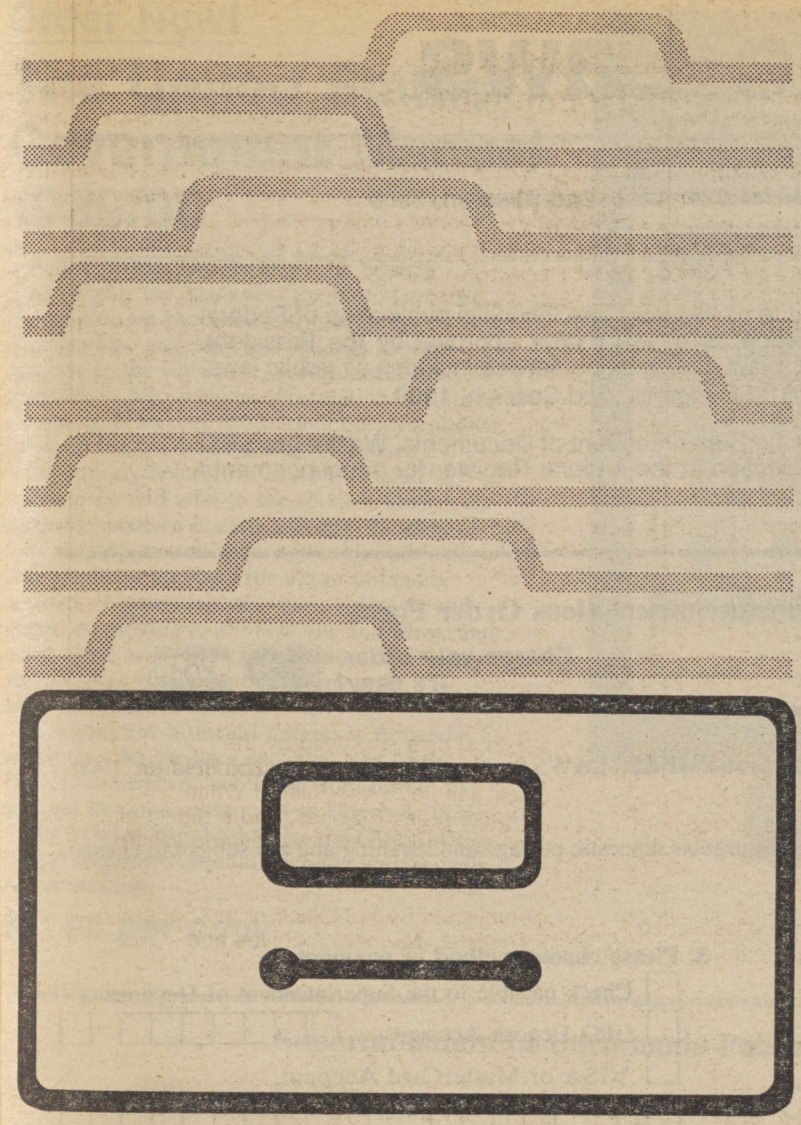

Guide to Record Retention Requirements

in the Code of Federal Regulations (CFR)

GUIDE: Revised January 1, 1989
SUPPLEMENT: Revised January 1, 1990

The GUIDE and the SUPPLEMENT should be used together. This useful reference tool, compiled from agency regulations, is designed to assist anyone with Federal recordkeeping obligations.

The various abstracts in the GUIDE tell the user (1) what records must be kept, (2) who must keep them, and (3) how long they must be kept.

The GUIDE is formatted and numbered to parallel the CODE OF FEDERAL REGULATIONS (CFR) for uniformity of citation and easy reference to the source document.

Compiled by the Office of the Federal Register, National Archives and Records Administration.

Order from Superintendent of Documents, U.S. Government Printing Office, Washington, DC 20402–9325.

Superintendent of Documents Publication Order Form

Order Processing Code: ***6788**

Charge your order. It's easy! MasterCard VISA

To fax your orders and inquiries. 202-275-0019

☐ **YES,** please send me the following indicated publication:

_____copies of the 1989 GUIDE TO RECORD RETENTION REQUIREMENTS IN THE CFR S/N 069–000–00020–7 at $12.00 each.

_____copies of the 1990 SUPPLEMENT TO THE GUIDE, S/N 069–000–00025–8 at $1.50 each.

1. The total cost of my order is $_____ (International customers please add 25%). All prices include regular domestic postage and handling and are good through 8/90. After this date, please call Order and Information Desk at 202–783–3238 to verify prices.

Please Type or Print

2. _____
(Company or personal name)

_____
(Additional address/attention line)

_____
(Street address)

_____
(City, State, ZIP Code)

(_____) _____
(Daytime phone including area code)

3. Please choose method of payment:

☐ Check payable to the Superintendent of Documents

☐ GPO Deposit Account ☐☐☐☐☐☐☐–☐

☐ VISA or MasterCard Account

☐☐☐☐☐☐☐☐☐☐☐☐☐☐☐☐

_____ ***Thank you for your order!***
(Credit card expiration date)

_____
(Signature)

2/90

4. Mail To: Superintendent of Documents, Government Printing Office, Washington, DC 20402–9325

Public Laws

are now available for the 101st Congress, 2nd Session, 1990

Pamphlet prints of public laws, often referred to as slip laws, are the initial publication of Federal laws upon enactment and are printed as soon as possible after approval by the President. Legislative history references appear on each law. Subscription service includes all public laws, issued irregularly upon enactment, for the 101st Congress, 2nd Session, 1990.

(Individual laws also may be purchased from the Superintendent of Documents, Washington, DC 20402-9328. Prices vary. See Reader Aids Section of the Federal Register for announcements of newly enacted laws and prices).

Superintendent of Documents Subscriptions Order Form

Order Processing Code:
*6216

Charge your order. It's easy! MasterCard VISA

☐ **YES,** please send me _____ subscriptions to **PUBLIC LAWS for the 101st Congress, 2nd Session, 1990 for $107 per subscription.**

1. The total cost of my order is $_____ . All prices include regular domestic postage and handling and are subject to change. International customers please add 25%.

Please Type or Print

2. _____
(Company or personal name)

_____
(Additional address/attention line)

_____
(Street address)

_____
(City, State, ZIP Code)

(_____)
(Daytime phone including area code)

3. **Please choose method of payment:**
☐ Check payable to the Superintendent of Documents
☐ GPO Deposit Account ☐☐☐☐☐☐☐☐-☐
☐ VISA or MasterCard Account
☐☐☐☐☐☐☐☐☐☐☐☐☐☐☐☐

_____
(Credit card expiration date)

Thank you for your order!

_____
(Signature)

1/90

4. **Mail To: Superintendent of Documents, Government Printing Office, Washington, D.C. 20402-9371**

Order Now!

The United States Government Manual 1989/90

As the official handbook of the Federal Government, the *Manual* is the best source of information on the activities, functions, organization, and principal officials of the agencies of the legislative, judicial, and executive branches. It also includes information on quasi-official agencies and international organizations in which the United States participates.

Particularly helpful for those interested in where to go and who to see about a subject of particular concern is each agency's "Sources of Information" section, which provides addresses and telephone numbers for use in obtaining specifics on consumer activities, contracts and grants, employment, publications and films, and many other areas of citizen interest. The *Manual* also includes comprehensive name and agency/subject indexes.

Of significant historical interest is Appendix C, which lists the agencies and functions of the Federal Government abolished, transferred, or changed in name subsequent to March 4, 1933.

The *Manual* is published by the Office of the Federal Register, National Archives and Records Administration.

$21.00 per copy



Superintendent of Documents Publication Order Form

Order processing code: *6724

Charge your order. It's easy! MasterCard VISA

To fax your orders and inquiries. 202-275-0019

☐ **YES,** please send me the following indicated publication:

_____ copies of THE UNITED STATES GOVERNMENT MANUAL, 1989/90 at $21.00 per copy. S/N 069-000-00022-3.

1. The total cost of my order is $_____ (International customers please add 25%). All prices include regular domestic postage and handling and are good through 4/90. After this date, please call Order and Information Desk at 202-783-3238 to verify prices.

Please Type or Print

2. _____
(Company or personal name)

_____
(Additional address/attention line)

_____
(Street address)

_____
(City, State, ZIP Code)

(_____)
(Daytime phone including area code)

3. Please choose method of payment:

☐ Check payable to the Superintendent of Documents

☐ GPO Deposit Account ☐☐☐☐☐☐☐–☐

☐ VISA, or MasterCard Account

☐☐☐☐☐☐☐☐☐☐☐☐☐☐☐☐

_____
(Credit card expiration date)

Thank you for your order!

_____
(Signature)

(Rev. 10-89)

4. **Mail To:** Superintendent of Documents, Government Printing Office, Washington, DC 20402-9325

New edition .... Order now !

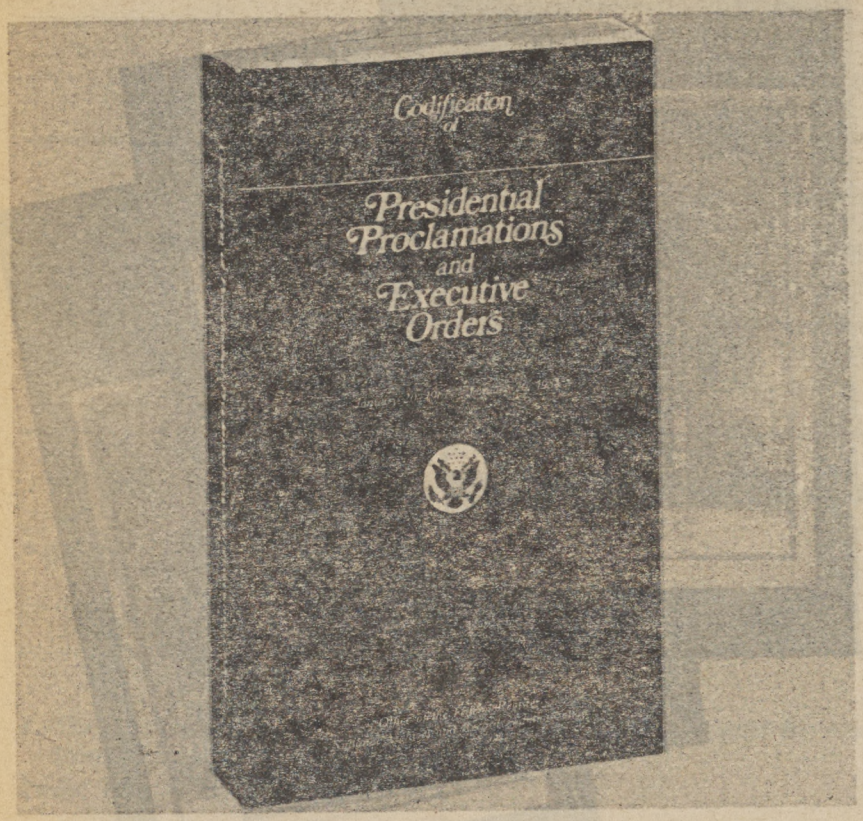

For those of you who must keep informed about **Presidential Proclamations and Executive Orders,** there is a convenient reference source that will make researching these documents much easier.

Arranged by subject matter, this edition of the *Codification* contains proclamations and Executive orders that were issued or amended during the period April 13, 1945, through January 20, 1989, and which have a continuing effect on the public. For those documents that have been affected by other proclamations or Executive orders, the codified text presents the amended version. Therefore, a reader can use the *Codification* to determine the latest text of a document without having to "reconstruct" it through extensive research.

Special features include a comprehensive index and a table listing each proclamation and Executive order issued during the 1945–1989 period—along with any amendments—an indication of its current status, and, where applicable, its location in this volume.

Published by the Office of the Federal Register, National Archives and Records Administration

Order from Superintendent of Documents, U.S. Government Printing Office, Washington, DC 20402–9325

Order Processing Code:
***6661**

Superintendent of Documents **Publications** Order Form

P3

Charge your order. It's easy!

To fax your orders and inquiries–(202) 275-0019

☐ **YES,** please send me the following indicated publication:

_____ copies of the CODIFICATION OF PRESIDENTIAL PROCLAMATIONS AND EXECUTIVE ORDERS, S/N 069-000-00018-5 at $32.00 each.

The total cost of my order is $_____. (International customers please add 25%.) Prices include regular domestic postage and handling and are good through 1/90. After this date, please call Order and Information Desk at 202-783-3238 to verify prices.

_____
(Company or personal name) (Please type or print)

_____
(Additional address/attention line)

_____
(Street address)

_____
(City, State, ZIP Code)

(_____) _____
(Daytime phone including area code)

Please Choose Method of Payment:

☐ Check payable to the Superintendent of Documents

☐ GPO Deposit Account ☐☐☐☐☐☐☐-☐

☐ VISA or MasterCard Account

☐☐☐☐☐☐☐☐☐☐☐☐☐☐☐☐

Thank you for your order!

_____
(Credit card expiration date)

_____
(Signature)

7/89

Mail To: Superintendent of Documents, Government Printing Office, Washington, DC 20402-9325