AUTHENTICATED
U.S. GOVERNMENT
INFORMATION
GPO

5-2-90
Vol. 55 No. 85

federal register

Wednesday
May 2, 1990

United States
Government
Printing Office
SUPERINTENDENT
OF DOCUMENTS
Washington, DC 20402

OFFICIAL BUSINESS
Penalty for private use, $300

SECOND CLASS NEWSPAPER

Postage and Fees Paid
U.S. Government Printing Office
(ISSN 0097-6326)

5-2-90
Vol. 55 No. 85
Pages 18303-18584

federal register

Wednesday
May 2, 1990

Briefing on How To Use the Federal Register
For information on a briefing in Washington, DC, see announcement on the inside cover of this issue.

FEDERAL REGISTER Published daily, Monday through Friday, (not published on Saturdays, Sundays, or on official holidays), by the Office of the Federal Register, National Archives and Records Administration, Washington, DC 20408, under the Federal Register Act (49 Stat. 500, as amended; 44 U.S.C. Ch. 15) and the regulations of the Administrative Committee of the Federal Register (1 CFR Ch. I). Distribution is made only by the Superintendent of Documents, U.S. Government Printing Office, Washington, DC 20402.

The **Federal Register** provides a uniform system for making available to the public regulations and legal notices issued by Federal agencies. These include Presidential proclamations and Executive Orders and Federal agency documents having general applicability and legal effect, documents required to be published by act of Congress and other Federal agency documents of public interest. Documents are on file for public inspection in the Office of the Federal Register the day before they are published, unless earlier filing is requested by the issuing agency.

The seal of the National Archives and Records Administration authenticates this issue of the **Federal Register** as the official serial publication established under the Federal Register Act. 44 U.S.C. 1507 provides that the contents of the **Federal Register** shall be judicially noticed.

The **Federal Register** will be furnished by mail to subscribers for $340 per year in paper form; $195 per year in microfiche form; or $37,500 per year for the magnetic tape. Six-month subscriptions are also available at one-half the annual rate. The charge for individual copies in paper or microfiche form is $1.50 for each issue, or $1.50 for each group of pages as actually bound, or $175.00 per magnetic tape. Remit check or money order, made payable to the Superintendent of Documents, U.S. Government Printing Office, Washington, DC 20402, or charge to your GPO Deposit Account or VISA or Mastercard.

There are no restrictions on the republication of material appearing in the **Federal Register.**

How To Cite This Publication: Use the volume number and the page number. Example: 55 FR 12345.

SUBSCRIPTIONS AND COPIES

PUBLIC

Subscriptions:

Paper or fiche	202–783–3238
Magnetic tapes	275–3328
Problems with public subscriptions	275–3054

Single copies/back copies:

Paper or fiche	783–3238
Magnetic tapes	275–3328
Problems with public single copies	275–3050

FEDERAL AGENCIES

Subscriptions:

Paper or fiche	523–5240
Magnetic tapes	275–3328
Problems with Federal agency subscriptions	523–5240

For other telephone numbers, see the Reader Aids section at the end of this issue.

THE FEDERAL REGISTER
WHAT IT IS AND HOW TO USE IT

FOR: Any person who uses the Federal Register and Code of Federal Regulations.

WHO: The Office of the Federal Register.

WHAT: Free public briefings (approximately 3 hours) to present:

1. The regulatory process, with a focus on the Federal Register system and the public's role in the development of regulations.
2. The relationship between the Federal Register and Code of Federal Regulations.
3. The important elements of typical Federal Register documents.
4. An introduction to the finding aids of the FR/CFR system.

WHY: To provide the public with access to information necessary to research Federal agency regulations which directly affect them. There will be no discussion of specific agency regulations.

WASHINGTON, DC

WHEN: May 24, at 9:00 a.m.
WHERE: Office of the Federal Register, First Floor Conference Room, 1100 L Street NW., Washington, DC.
RESERVATIONS: 202–523–5240.

Contents

Federal Register

Vol. 55, No. 85

Wednesday, May 2, 1990

Agricultural Marketing Service
RULES
Milk marketing orders:
Great Basin, 18303

Agriculture Department
See Agricultural Marketing Service; Animal and Plant Health Inspection Service; Forest Service; Soil Conservation Service

Animal and Plant Health Inspection Service
PROPOSED RULES
Exportation and importation of animals and animal products:
Fresh, chilled, and frozen meat and milk and milk products, importation; rinderpest and foot-and-mouth disease, 18342
Plant-related quarantine, domestic:
Citrus canker, 18342
Viruses, serums, toxins, etc.:
Exempted biological products; shipment, 18345

Coast Guard
RULES
Pollution:
Prevention of pollution from ships; garbage discharges records, waste management plans, and informational placards, 18578

Commerce Department
See also International Trade Administration; Minority Business Development Agency
NOTICES
Agency information collection activities under OMB review, 18364
(2 documents)

Committee for the Implementation of Textile Agreements
NOTICES
Cotton, wool, and man-made textiles:
Czechoslovakia, 18369
El Salvador, 18369
United Arab Emirates, 18370

Commodity Futures Trading Commission
NOTICES
Meetings; Sunshine Act, 18435

Customs Service
PROPOSED RULES
Air commerce:
Private aircraft; overflight exemptions; withdrawn, 18352
Trademarks, trade names, copyrights, mask works, and patents:
Copyrights; lawfully make copies and notification to copyright owners; withdrawn, 18353

Defense Department
See Navy Department; Uniformed Services University of the Health Sciences

Education Department
NOTICES
Grants and cooperative agreements; availability, etc.:
Educational research and development centers program, 18372
Mid-career teacher training program, 18516

Energy Department
See also Federal Energy Regulatory Commission; Hearings and Appeals Office, Energy Department
NOTICES
Natural gas exportation and importation:
Great Lakes Gas Transmission Co., 18372

Environmental Protection Agency
RULES
Acquisition regulations:
Unauthorized commitments ratification, 18340
Air pollutants, hazardous; national emission standards:
Benzene emissions from chemical manufacturing process vents, industrial solvent use, etc.
Correction, 18330
Hazardous waste:
Underground storage tanks—
Petroleum; financial responsibility requirements, 18566
Hazardous waste, and Superfund program:
Identification and listing, and reportable quantity adjustments—
1,1-Dimethylhydrazine production wastes, 18496
PROPOSED RULES
Hazardous waste, and Superfund program:
Identification and listing, and reportable quantity adjustments—
1,1-Dimethylhydrazine production wastes, 18507

Federal Aviation Administration
RULES
Airworthiness directives:
Israel Aircraft Industries, 18304
Sikorsky, 18305
Airworthiness standards:
Commuter category airplanes, 18570
PROPOSED RULES
Airworthiness directives:
Boeing, 18349
McDonnell Douglas, 18350
Robinson Helicopter Co., 18350
Airworthiness standards:
Special conditions—
Aerospatiale model AS 332L2 Super Puma helicopter, 18346
Jet routes, 18351
NOTICES
Civil penalty actions; Administrator's decisions and orders; availability, 18430
Environmental statements; availability, etc.:
Anchorage International Airport, AK, 18431

Federal Communications Commission
RULES
Communications equipment:
Frequency allocations and radio treaty matters—
Radio frequency devices; non-licensed operation, 18339
PROPOSED RULES
Common carrier services; and radio services, special:
New channeling plan in 10550-10680 MHz band, 18354
Multipoint distribution service, multichannel multipoint distribution service, instructional television fixed service, private operational-microwave fixed service, and cable television relay service; premium video programming over-the-air offered directly into homes, 18354
Radio stations; table of assignments:
New Mexico, 18355
NOTICES
Agency information collection activities under OMB review, 18387
Television broadcasting:
Satellite cable programming, universal encryption standard; inquiry into need; report availability, 18388

Federal Deposit Insurance Corporation
NOTICES
Meetings; Sunshine Act, 18435

Federal Election Commission
NOTICES
Special elections; filing dates:
New Jersey, 18388

Federal Emergency Management Agency
RULES
Flood insurance; communities eligible for sale:
Maine et al., 18336

Federal Energy Regulatory Commission
NOTICES
Hydroelectric applications, 18373, 18377 (2 documents)
Applications, hearings, determinations, etc.:
Florida Power & Light Co., 18377
Great Lakes Gas Transmission Co., 18378

Federal Highway Administration
PROPOSED RULES
Motor carrier safety standards:
Inspection, repair, and maintenance—
Brake inspection; readjustment limits, 18355

Federal Reserve System
NOTICES
Meetings; Sunshine Act, 18435

Fish and Wildlife Service
PROPOSED RULES
Endangered and threatened species:
Gulf sturgeon, 18357
NOTICES
Endangered and threatened species permit applications, 18401

Food and Drug Administration
RULES
Animal drugs, feeds, and related products:
Tylosin, 18330
Food additives:
Irradiated food production, processing, and handling—
Ionizing radiation for control of food-borne pathogens in poultry, 18538
NOTICES
Animal drugs, feeds, and related products:
Cargill, Inc., et al.; approval withdrawn, 18389
Food for human consumption:
Identity standards deviation; market testing permits—
Sour cream, light, 18389
GRAS or prior-sanctioned ingredients:
Amerace Corp., 18390
Human drugs:
Patent extension; regulatory review period determinations—
Pindac, 18390

Forest Service
NOTICES
Environmental statements; availability, etc.:
Beaverhead National Forest, MT, 18361
Boise National Forest, ID, 18362
Eldorado National Forest, CA, 18362
Tongass National Forest, AK, 18362

Health and Human Services Department
See Food and Drug Administration; Health Care Financing Administration; Human Development Services Office; Public Health Service

Health Care Financing Administration
RULES
Medicare:
End-stage renal disease program—
Hemodialysis bloodlines; reuse protocol, 18331
NOTICES
Medicare:
Fiscal intermediaries and carriers; administration performance evaluation, 18391

Health Resources and Services Administration
See Public Health Service

Hearings and Appeals Office, Energy Department
NOTICES
Decisions and orders, 18378
Special refund procedures; implementation, 18380, 18382 (2 documents)

Housing and Urban Development Department
RULES
Mortgage and loan insurance programs, and low income housing:
Aliens granted temporary/permanent resident status; financial assistance, temporary disqualification, 18490

Human Development Services Office
NOTICES
Meetings:
President's Committee on Mental Retardation, 18400

Interior Department
See Fish and Wildlife Service; Land Management Bureau; Reclamation Bureau

International Trade Administration
NOTICES
Antidumping:
Heavy forged hand tools, finished or unfinished, with or without handles, from China, 18364
Applications, hearings, determinations, etc.:
Brown University et al., 18366
Health and Human Services Department et al., 18367

Interstate Commerce Commission
NOTICES
Rail carriers:
Waybill data; release for use, 18405
Railroad operation, acquisition, construction, etc.:
Burlington Northern Railroad Co., 18405
Mineral Wells & Eastern Railway Co., 18405

Land Management Bureau
RULES
Public land orders:
Alaska, 18335
NOTICES
Minerals management:
Federal coal and other solid mineral leases; royalty rate reduction guidelines, 18401
Resource management plans, etc.:
Caliente Resource Area, CA, 18403
Survey plat filings:
Florida, 18403, 18404
(3 documents)

Merit Systems Protection Board
NOTICES
Meetings; Sunshine Act, 18435

Minority Business Development Agency
NOTICES
Business development center program applications:
Connecticut, 18368
Virginia, 18368

Navy Department
NOTICES
Environmental statements; availability, etc.:
Base realignments and closures—
Naval Air Facility El Centro, CA, 18371
Naval Ordnance Station Louisville, KY, 18371
Naval Shipyard Long Beach, CA, 18371
Meetings:
Naval Research Advisory Committee, 18372

Nuclear Regulatory Commission
NOTICES
Operating licenses, amendments; no significant hazards considerations; biweekly notices, 18405
Applications, hearings, determinations, etc.:
Duke Power Co., 18427
Long Island Lighting Co., 18428
Wolf Creek Nuclear Operating Corp., 18429

Public Health Service
See also Food and Drug Administration
NOTICES
Organization, functions, and authority delegations:
Health Care Policy and Research Agency, Administrator, 18401

Reclamation Bureau
NOTICES
Central Valley Project, CA; cost allocation study report; availability, 18404

Research and Special Programs Administration
PROPOSED RULES
Hazardous materials:
Explosives; hazard classification, packaging, and hazard communication requirements, 18438
Modal regulations; revisions, 18546
NOTICES
Meetings:
Hazardous materials; reporting releases and transportation requirements; compliance with Federal requirements; joint workshop with EPA, 18431

Securities and Exchange Commission
RULES
Securities:
Offshore offers and sales (Regulation S), 18306
NOTICES
Meetings; Sunshine Act, 18435
Self-regulatory organizations; proposed rule changes:
National Association of Securities Dealers, Inc., 18429

Soil Conservation Service
NOTICES
Watershed projects; deauthorization of funds:
Lower Tri-County Watershed, AR, 18363

Textile Agreements Implementation Committee
See Committee for the Implementation of Textile Agreements

Transportation Department
See also Coast Guard; Federal Aviation Administration; Federal Highway Administration; Research and Special Programs Administration
NOTICES
Aviation proceedings:
Certificates of public convenience and necessity and foreign air carrier permits; weekly applications, 18430

Treasury Department
See also Customs Service
NOTICES
Agency information collection activities under OMB review, 18432, 18433
(4 documents)
Organization, functions, and authority delegations:
Financial Crimes Enforcement Network, 18433

Uniformed Services University of the Health Sciences
NOTICES
Meetings; Sunshine Act, 18435

Separate Parts In This Issue

Part II
Department of Transportation, Research and Special Programs Administration, 18438

Part III
Department of Housing and Urban Development, 18490

Part IV
Environmental Protection Agency, 18496

Part V
Department of Education, 18516

Part VI
Department of Health and Human Services, Food and Drug Administration, 18538

Part VII
Department of Transportation, Research and Special Programs Administration, 18546

Part VIII
Environmental Protection Agency, 18566

Part IX
Department of Transportation, Federal Aviation Administration, 18570

Part X
Department of Transportation, Coast Guard, 18578

Reader Aids
Additional information, including a list of public laws, telephone numbers, and finding aids, appears in the Reader Aids section at the end of this issue.

CFR PARTS AFFECTED IN THIS ISSUE

A cumulative list of the parts affected this month can be found in the Reader Aids section at the end of this issue.

7 CFR
1139 18303
Proposed Rules:
301 18342

9 CFR
Proposed Rules:
94 18342
114 18345

14 CFR
23 18570
39 (2 documents) 18304, 18305
Proposed Rules:
21 18346
29 18346
39 (3 documents) 18349, 18350
75 18351

17 CFR
200 18306
230 18306

19 CFR
Proposed Rules:
122 18352
133 18353

21 CFR
179 18538
510 18330
558 18330

24 CFR
49 18490
203 18490
207 18490
213 18490
221 18490
234 18490
237 18490
510 18490
570 18490

33 CFR
151 18578

40 CFR
61 18330
261 18496
271 18496
280 18566
302 18496
Proposed Rules:
261 18507
271 18507
302 18507

42 CFR
405 18331

43 CFR
Public Land Orders:
1697 (Revoked) 18335
6777 18335

44 CFR
64 18336

46 CFR
25 18578

47 CFR
15 18339
Proposed Rules:
21 (2 documents) 18354
43 18354
73 18355
74 18354
78 18354
94 (2 documents) 18354

48 CFR
1501 18340

49 CFR
Proposed Rules:
171 18438
172 18438
173 18438
174 18546
175 18546
177 18546
396 18355

50 CFR
Proposed Rules:
17 18357

Rules and Regulations

Federal Register
Vol. 55, No. 85
Wednesday, May 2, 1990

This section of the FEDERAL REGISTER contains regulatory documents having general applicability and legal effect, most of which are keyed to and codified in the Code of Federal Regulations, which is published under 50 titles pursuant to 44 U.S.C. 1510.
The Code of Federal Regulations is sold by the Superintendent of Documents. Prices of new books are listed in the first FEDERAL REGISTER issue of each week.

DEPARTMENT OF AGRICULTURE

Agricultural Marketing Service

7 CFR Part 1139

[DA-90-012]

Milk in the Great Basin Marketing Area; Suspension of Certain Provisions of the Order

AGENCY: Agricultural Marketing Service, USDA.

ACTION: Suspension of rule.

SUMMARY: This action suspends for an indefinite period a "touch base" requirement where a dairy farmer, who was not a producer under the Great Basin order in the previous month, would not be eligible to have milk diverted to a nonpool plant until after one day's production is received at a pool plant. This action was requested by a cooperative association whose members supply a majority of the milk marketed under the Great Basin order.

EFFECTIVE DATE: April 1, 1990.

FOR FURTHER INFORMATION CONTACT: Richard A. Glandt, Marketing Specialist, USDA/AMS/Dairy Division, Order Formulation Branch, room 2968, South Building, P.O. Box 96456, Washington, DC 20090-6456, (202) 447-4829.

SUPPLEMENTARY INFORMATION: Prior document in this proceeding: Notice of Proposed Suspension: Issued April 3, 1990; published April 6, 1990 (55 FR 12848).

The Regulatory Flexibility Act (5 U.S.C. 601-612) requires the Agency to examine the impact of a proposed rule on small entities. Pursuant to 5 U.S.C. 605(b), the Administrator of the Agricultural Marketing Service has certified that this action will not have a significant economic impact on a substantial number of small entities. Such action will lessen the regulatory impact of the order on certain milk handlers and will tend to ensure that dairy farmers continue to have their milk priced under the order and thereby receive the benefits that accrue from such pricing.

This final rule has been reviewed under Executive Order 12291 and Departmental Regulation 1512-1 and has been determined to be a "non-major" rule under the criteria contained therein.

This order of suspension is issued pursuant to the provisions of the Agricultural Marketing Agreement Act of 1937, as amended (7 U.S.C. 601-674), and of the order regulating the handling of milk in the Great Basin marketing area.

Notice of proposed rulemaking was published in the **Federal Register** on April 6, 1990 (55 FR 12848) concerning a proposed indefinite suspension of certain provisions of the order. Interested parties were afforded opportunity to file written data, views, and arguments thereon. No comments were received in opposition to the proposed suspension.

After consideration of all relevant material, including the request for the action, the proposal in the notice, and other available information, it is hereby found and determined that for the month of April 1990 and continuing indefinitely, the following provision of the order does not tend to effectuate the declared policy of the Act:

Section 1139.13(d)(6)

Statement of Consideration

This action suspends for an indefinite period a "touch base" provision of the Great Basin Federal milk order. The suspension of this provision removes the requirement that a dairy farmer who was not a producer under the Great Basin order in the previous month will not be eligible to have milk diverted to a nonpool plant until after one day's production is received at a pool plant. Western Dairymen Cooperative, Inc. (WDCI), a dairy farmer cooperative whose members supply a majority of the milk marketed under the Great Basin order, requested this action.

WDCI's need to adjust milk pick up routes over great distances in response to changes in demand at the many plants that it supplies with supplemental milk makes it unreasonable to expect delivery of at least one day's milk production to a pool plant before such milk is qualified for diversion, and thus for pooling under the order. This is further complicated by the fact that confirmation of delivery of a day's milk production to a pool plant is not known until after a month's end without incurring unnecessary increased expense involved in tracking milk.

The above consideration as well as WDCI's claim that milk which it diverts in excess of fluid needs, or that is shifted from plant to plant, serves an integral role in the market's Grade A milk supply and thus deserves to be pooled under the Great Basin order provide a sound basis for this suspension action. Neither the producer members, nor the market in general, is served by maintenance of this touch base provision at this time.

It is hereby found and determined that thirty days' notice of the effective date hereof is impractical, unnecessary and contrary to the public interest in that:

(a) The suspension is necessary to reflect current marketing conditions and to assure orderly marketing conditions in the marketing area in that uneconomic movements of milk would likely be made solely for the purpose of pooling milk of producers who have regularly been associated with the market;

(b) This suspension does not require of persons affected substantial or extensive preparation prior to the effective date; and

(c) Notice of proposed rulemaking was given interested parties and they were afforded opportunity to file written data, views, or arguments concerning this suspension. No comments were received.

Therefore, good cause exists for making this order effective less than 30 days from date of publication in the **Federal Register.**

List of Subjects in 7 CFR Part 1139

Milk marketing orders.

It is therefore ordered, that § 1139.13(d)(6) of the Great Basin order is hereby indefinitely suspended beginning April 1, 1990.

PART 1130—MILK IN THE GREAT BASIN MARKETING AREA

1. The authority citation for 7 CFR part 1139 continues to read as follows:

Authority: Secs. 1-19, 48 Stat. 31, as amended, 7 U.S.C. 601-674.

§ 1139.13 [Suspended in part]

2. In § 1139.13, paragraph (d)(6) is indefinitely suspended beginning April 1, 1990.

Signed at Washington, DC, on April 26, 1990.

John E. Frydenlund,

Deputy Assistant Secretary, Marketing and Inspection Services.

[FR Doc. 90-10174 Filed 5-1-90; 8:45 am]

BILLING CODE 3410-01-M

DEPARTMENT OF TRANSPORTATION

Federal Aviation Administration

14 CFR Part 39

[Docket No. 90-NM-63-AD; Amdt. 39-6589]

Airworthiness Directives; Israel Aircraft Industries (IAI) Model 1123, 1124, and 1124A Series Airplanes

AGENCY: Federal Aviation Administration (FAA), DOT.

ACTION: Final rule.

SUMMARY: This amendment adopts a new airworthiness directive (AD), applicable to all Israel Aircraft Industries (IAI) Model 1123, 1124, and 1124A Westwind Astra series airplanes, which requires repetitive visual inspections to detect corrosion on the lower exterior surface of the aileron torque transfer tubes. This amendment is prompted by a recent report of multiple holes found in an aileron torque transfer tube due to corrosion. This condition, if not corrected, could result in reduced controllability of the airplane.

EFFECTIVE DATE: May 18, 1990.

ADDRESSES: The applicable service information may be obtained from Astra Jet Corporation, Technical Publications, P.O. Box 10086, Wilmington, Delaware 19850. This information may be examined at the FAA, Northwest Mountain Region, Transport Airplane Directorate, 17900 Pacific Highway South, Seattle, Washington, or the Standardization Branch, 9010 East Marginal Way South, Seattle, Washington.

FOR FURTHER INFORMATION CONTACT: Mr. Robert Huhn, Standardization Branch, ANM-113; telephone (206) 431-1950. Mailing address: FAA, Northwest Mountain Region, 17900 Pacific Highway South, C-68966, Seattle, Washington 98168.

SUPPLEMENTARY INFORMATION: Recently, during inspection of an Israel Aircraft Industries (IAI) Model 1124 Westwind Astra series airplane, several holes due to corrosion were found in the aileron torque transfer tube. Evidence of this relatively severe corrosion was blistering of the paint in a small area on the outside of the tube. These aileron torque tube assemblies, Part Number (P/N) 513506-503, are also installed on IAI Model 1123 series airplanes. This condition, if not corrected, could result in reduced controllability of the airplane.

Westwind Astra has issued Service Bulletins 1124-27-100, Revision 1 and 1123-27-026, Revision 1, both dated April 25, 1990, which describe procedures to inspect the aileron control rod assembly for corrosion and replacement of the rod, if necessary. The Civil Aviation Authority of Israel has classified these service bulletins as mandatory.

This airplane model is manufactured in Israel and type certificated in the United States under the provisions of § 21.29 of the Federal Aviation Regulations and the applicable bilateral airworthiness agreement.

Since this condition is likely to exist or develop on other airplanes of the same type design registered in the United States, this AD requires repetitive visual inspections to detect corrosion in the aileron control rod assemblies, and replacement with a new rod, if necessary, in accordance with the service bulletin previously described.

Since a situation exists that requires immediate adoption of this regulation, it is found that notice and public procedure hereon are impracticable, and good cause exists for making this amendment effective in less than 30 days.

The regulations adopted herein will not have substantial direct effects on the States, on the relationship between the national government and the States, or on the distribution of power and responsibilities among the various levels of government. Therefore, in accordance with Executive Order 12612, it is determined that this final rule does not have sufficient federalism implications to warrant the preparation of a Federalism Assessment.

The FAA has determined that this regulation is an emergency regulation and that it is not considered to be major under Executive Order 12291. It is impracticable for the agency to follow the procedures of Order 12291 with respect to this rule since the rule must be issued immediately to correct an unsafe condition in aircraft. It has been further determined that this action involves an emergency regulation under DOT Regulatory Policies and Procedures (44 FR 11034; February 26, 2979). If it is determined that this emergency regulation otherwise would be significant under DOT Regulatory Policies and Procedures, a final regulatory evaluation will be prepared and placed in the regulatory docket (otherwise, an evaluation is not required). A copy of it, if filed, may be obtained from the Rules Docket.

List of Subjects in 14 CFR Part 39

Air transportation, Aircraft, Aviation safety, Safety.

Adoption of the Amendment

Accordingly, pursuant to the authority delegated to me by the Administrator, the Federal Aviation Administration amends 14 CFR part 39 of the Federal Aviation Regulation as follows:

PART 39—[AMENDED]

1. The authority citation for part 39 continues to read as follows:

Authority: 49 U.S.C. 1354(a), 1421 and 1423; 49 U.S.C. 106(g) (Revised Pub. L. 97-449, January 12, 1983); and 14 CFR 11.89.

§ 39.13 [Amended]

2. Section 39.13 is amended by adding the following new airworthiness directive:

Israel Aircraft Industries (IAI), LTD: Applies to all Model 1123, 1124, and 1124A Westwind Astra series airplanes, certificated in any category. Compliance is required as indicated, unless previously accomplished.

To detect corrosion in the aileron control rod assembly, accomplish the following:

A. Within 20 hours time-in-service after the effective date of this AD, and thereafter at intervals not to exceed 150 hours time-in-service, perform a detailed visual inspection to detect evidence of corrosion, such as pits, and/or blisters under the paint, on the lower exterior surface of the aileron torque transfer tubes, in accordance with Westwind Astra Service Bulletins 1124-27-100, Revision 1 or 1123-27-026, Revision 1, both dated April 25, 1990.

B. If corrosion or cracks are found, prior to further flight, remove and replace the transfer tube assembly with a serviceable part, in accordance with Westwind Astra Service Bulletins 1124-27-100, Revision 1 or 1123-27-026, Revision 1, both dated April 25, 1990.

C. An alternate means of compliance or adjustment of the compliance time, which provides an acceptable level of safety, may be used when approved by the Manager, Standardization Branch, ANM-113, FAA, Northwest Mountain Region.

Note: The request should be forwarded through an FAA Principal Maintenance Inspector (PMI), who will either concur or comment and then send it to the Manager, Standardization Branch, ANM-113.

D. Special flight permits may be issued in accordance with FAR 21.197 and 21.199 to operate airplanes to a base in order to comply with the requirements of this AD.

All persons affected by this directive who have not already received the appropriate service information from the manufacturer may obtain copies upon request to Astra Jet Corporation, Technical Publications, P.O. Box 10086, Wilmington, Delaware 19850. This information may be examined at the FAA, Northwest Mountain Region, Transport Airplane Directorate, 17900 Pacific Highway South, Seattle, Washington, or the Standardization Branch, 9010 East Marginal Way South, Seattle, Washington.

This amendment becomes effective May 18, 1990.

Issued in Seattle, Washington, on April 25, 1990.

Darrell M. Pederson,

Acting Manager, Transport Airplane Directorate, Aircraft Certification Service.

[FR Doc. 90-10183 Filed 5-1-90; 8:45 am]

BILLING CODE 4910-13-M

---

14 CFR Part 39

[Docket No. 89-ASW-40; Amdt. 39-6590]

Airworthiness Directives; Sikorsky Model S-58T Series Helicopters

AGENCY: Federal Aviation Administration (FAA), DOT.

ACTION: Final rule.

SUMMARY: This amendment adopts a new airworthiness directive (AD) which requires inspection of the engine combining gear box/angle gear box drive shaft assembly for cracks and loose balance weights on Sikorsky Model S-58T series helicopters. The AD is needed to prevent failure of the engine combining gear box/angle gear box drive shaft assembly which could result in loss of the helicopter.

EFFECTIVE DATE: June 1, 1990.

ADDRESSES: The applicable service bulletin (SB) may be obtained from: Mr. R. E. Warren, Sikorsky Aircraft Division, United Technologies Corporation, North Main Street, Stratford Connecticut 06601, or may be examined in the Regional Rules Docket, room 158, Building 3B, between the hours of 8 a.m.and 4:30 p.m., Monday through Friday, except Federal holidays.

FOR FURTHER INFORMATION CONTACT: Terry Fahr, Boston Aircraft Certification Office, Engine and Propeller Directorate, Aircraft Certification Service, 12 New England Executive Park, Burlington, Massachusetts 01803; telephone (617) 273-7103.

SUPPLEMENTARY INFORMATION: A proposal to amend part 39 of the Federal Aviation Regulations to include an AD requiring an inspection of the engine combining gear box/angle gear box drive shaft assembly for cracks and loose balance weights on the Sikorsky Model S-58T series helicopters was published in the Federal Register on November 13, 1989 (54 FR 47217).

The proposal was prompted by two reported incidents of loose balance weights on the engine combining gear box/angle gear box drive shaft on S-58T series helicopters. One of the incidents resulted in a fatigue crack of the drive shaft. Since this condition is likely to exist or develop on other helicopters of the same type design, an AD is being issued which requires inspection, and removal, if necessary, of the engine combining gear box/angle gear box drive shaft assembly of these helicopters.

Interested persons have been afforded an opportunity to participate in the making of this amendment. No comments were received. Accordingly, other than clarifying and combining the note paragraph following paragraph (b)(1) into the text of paragraph (b)(1), the proposal is adopted without change.

The regulations adopted herein will not have substantial direct effects on the States, on the relationship between the national government and the States, or on the distribution of power and responsibilities among the various levels of government. Therefore, in accordance with Executive Order 12612, it is determined that this proposal does not have sufficient federalism implications to warrant the preparation of a Federalism Assessment.

The FAA has determined that this regulation involves 41 helicopters, and the approximate cost would be $240 per helicopter for a total potential cost impact of $9,840. Therefore, I certify that this action: (1) Is not a "major rule" under Executive Order 12291; (2) is not a "significant rule" under DOT Regulatory Policies and Procedures (44 FR 11034; February 26, 1979); (3) does not warrant preparation of a regulatory evaluation as the anticipated impact is so minimal; and (4) if promulgated, will not have a significant economic impact, positive or negative, on a substantial number of small entities under the criteria of the Regulatory Flexibility Act.

List of Subjects in 14 CFR Part 39

Air transportation, Aircraft, Aviation safety, Safety.

Adoption of the Amendment

Accordingly, pursuant to the authority delegated to me by the Administator, the FAA amends part 39 of the Federal Aviation Regulations (14 CFR 39.13) as follows:

PART 39—[AMENDED]

1. The authority citation for part 39 continues to read as follows:

Authority: 49 U.S.C. 1354(a), 1421 and 1423; 49 U.S.C. 106(g) (Revised Pub. L. 97-449, January 12, 1983); and 14 CFR 11.89.

§ 39.13 [Amended]

2. Section 39.13 is amended by adding the following new AD:

Sikorsky Aircraft: Applies to Model S-58T series helicopters, certificated in any category. (Docket No. 89-ASW-40)

Compliance is required as indicated, unless already accomplished.

To prevent failure of the engine combining gear box/angle gear box drive shaft assembly, part number (P/N) 58350-10030-045, which could result in loss of the helicopter, accomplish the following:

Within the next 50 hours' time in service after the effective date of this AD, inspect the engine combining gear box/angle gear box drive shaft assembly for cracks and loose balance weights as follows:

(a) Remove the engine combining gear box/angle gear box drive shaft assembly from the helicopter.

(b) Check the engine combining gear box/angle gear box drive shaft assembly for loose balance weights and a gap at the riveted joint between the balance weight and shaft as follows:

(1) Using a feeler gage, check for a gap greater than 0.002 inch in the immediate area of the attaching rivets which secure the balance weights to the shaft. On balance weights which require two rivets, do not check at the mid-span where an acceptable gap may exist.

(2) If a gap greater than 0.002 inch exists in the immediate area of the riveted joint, remove the engine combining gear box/angle gear box drive shaft assembly from service and reinstall an airworthy part in accordance with the standard maintenance instructions.

(3) If the gap at the rivets is 0.002 inch or less, further inspect the engine combining gear box/angle gear box drive shaft assembly as follows:

(i) Mask off an area on the engine combining gear box/angle gear box drive shaft assembly about 0.5 inch from all sides of the balance weights.

(ii) Remove the protective finish, paint, and primer from the engine combining gear box/angle gear box drive shaft assembly using paint remover, MIL-R-81294 or equivalent.

(iii) Remove the masking tape from the engine drive shaft assembly.

(iv) Clean the surface with methyl ethyl ketone, Federal Spec. TT-M-261 or equivalent.

(v) Fluorescent-penetrant-inspect the cleaned area in accordance with MIL-I-6866, Type 1, Method C, or equivalent.

(vi) If any cracks are found, remove the engine combining gear box/angle gear box drive shaft assembly from service and reinstall an airworthy part in accordance with the standard maintenance instructions.

(vii) If no cracks are found, remove the developer background used in the fluorescent

penetrant inspection. Use a blacklight to aid in complete removal of the developer.

(viii) Apply two coats of AMLGUARD, in accordance with MIL–C–85084 (TS), Type 1, or equivalent, over all the surfaces in the inspection area. Allow a ½-hour drying time between coats.

(c) Install the engine combining gear box/angle gear box drive shaft assembly on the helicopter in accordance with standard maintenance instructions.

Note: This AD contains material from Sikorsky Alert Service Bulletin No. 58B35–30, dated May 17, 1989.

(d) The aircraft may be ferried in accordance with the provisions of FAR §§ 21.197 and 21. 199 to a base where compliance can be accomplished.

(e) An alternate method of compliance or adjustment of the compliance times, which provides an equivalent level of safety, may be used if approved by the Manager, Boston Aircraft Certification Office, Engine and Propeller Directorate, Aircraft Certification Service, 12 New England Executive Park, Burlington, Massachusetts 01803.

Note: The request should be forwarded through an FAA Maintenance Inspector, who may add comments and then send it to the manager of the Boston Aircraft Certification Office.

This amendment becomes effective on June 1, 1990.

Issued at Fort Worth, Texas, on April 25, 1990.

James D. Erickson,

Manager, Rotorcraft Directorate, Aircraft Certification Service.

[FR Doc. 90–10184 Filed 5–1–90; 8:45 am]

BILLING CODE 4910–13–M

SECURITIES AND EXCHANGE COMMISSION

17 CFR Parts 200 and 230

[Release No. 33–6863; 34–27942; IC–17458; File No. S7–7–90; International Series Rel. No. 122]

RIN 3235–AD23

Offshore Offers and Sales

AGENCY: Securities and Exchange Commission.

ACTION: Final rules, rule amendments and solicitation of comments.

SUMMARY: The Securities and Exchange Commission (the "Commission") is announcing the adoption of Regulation S to clarify the extraterritorial application of the registration provisions of the Securities Act of 1933. Regulation S provides generally that any offer or sale that occurs within the United States is subject to section 5 of the Securities Act and any offer or sale that occurs outside the United States is not subject to section 5. Additionally, the Regulation provides two "safe harbors" for specified transactions. Offers and sales meeting all of the conditions of the applicable safe harbor are deemed to be outside the United States and, therefore, not subject to section 5. The Regulation is not available with respect to offers and sales of securities issued by open-end investment companies or unit investment trusts registered or required to register under the Investment Company Act of 1940. The Commission is soliciting comment regarding whether to extend the application of the Regulation to offers and sales of securities issued by registered mutual funds and unit investment trusts and, if so, the method by which to accomplish such extension.

DATES: *Effective date:* May 2, 1990, except that offerings of securities commenced on or prior to the ninetieth day following publication in the **Federal Register** may proceed under Securities Act Release No. 4708 and related no-action and interpretive letters.

Comments on the application of the Regulation to offers and sales of securities issued by investment companies should be received on or before June 25, 1990.

ADDRESSES: All communications on this matter should be submitted in triplicate to Jonathan G. Katz, Secretary, Securities and Exchange Commission, 450 Fifth Street, NW., Washington, DC 20549. Comments should refer to File No. S7–7–90. All comments will be available for public inspection and copying in the Commission's Public Reference Room, 450 Fifth Street, NW., Washington, DC 20549.

FOR FURTHER INFORMATION CONTACT: Anita Klein, Office of International Corporate Finance, (202) 272–3246, Division of Corporation Finance, or (with respect to solicitation of comments regarding offerings of certain mutual fund and unit investment trust securities) Kenneth J. Berman, Office of Disclosure and Investment Adviser Regulation, (202) 272–2107, Division of Investment Management, Securities and Exchange Commission, 450 Fifth Street, NW., Washington, DC 20549.

Table of Contents

I. Executive Summary
II. Background and Introduction
III. Discussion of Regulation S
A. General Statement
B. Safe Harbors
1. General Conditions
a. Requirement of Offshore Transaction
b. Directed Selling Efforts
2. Issuer Safe Harbor
a. Category 1: Foreign Issuers With No Substantial U.S. Market Interest; Overseas Directed Offerings; Securities Backed By the Full Faith and Credit of a Foreign Government; Employee Benefit Plans
(1) "Substantial U.S. Market Interest"
(2) "Overseas Directed Offerings"
(3) Employee Benefit Plans
b. Category 2: Reporting Issuers; Non-Reporting Foreign Issuers' Debt Securities; Non-Reporting Foreign Issuers' Non-Participating Preferred Stock and Asset-Backed Securities
(1) Transactional Restrictions
(a) U.S. Person
(b) Measurement of the Restricted Period
(c) ADRs and the Restricted Period
(d) Confirmations
(2) Offering Restrictions
c. Category 3: Non-Reporting U.S. Issuers; Equity Offerings By Non-Reporting Foreign Issuers With Substantial U.S. Market Interest
3. Resale Safe Harbor
4. Safe Harbor Protections
C. Interaction With Other Securities Act Provisions
1. Contemporaneous U.S. and Offshore Offerings
2. Revisions to Rules
D. Interaction With Trust Indenture Act
E. Interaction With Investment Company Act
IV. Cost-Benefit Analysis
V. Availability of Final Regulatory Flexibility Analysis
VI. Summary of Initial Regulatory Flexibility Analysis
VII. Paperwork Reduction
VIII. Effective Date
IX. Statutory Basis and Text of Regulation and Regulation Amendments
Appendix A—Foreign Issuers Chart
Appendix B—Domestic Issuers Chart

I. Executive Summary

On June 10, 1988, the Commission published for comment Regulation S,[1] which was intended to clarify the extraterritorial application of the registration requirements of the Securities Act of 1933 (the "Securities Act").[2] The proposed Regulation contained both a general statement providing that the registration requirements do not apply to offers and sales that occur outside the United States, and two non-exclusive safe harbors from those requirements for specified offers and sales.

After reviewing the comments received,[3] which supported the

[1] Securities Act Release No. 6779 (June 10, 1988) [53 FR 22661] (the "Proposing Release"). The Proposing Release and the regulations as set forth therein are hereinafter referred to as the "initial proposal."

[2] 15 U.S.C. 77a *et seq.*

[3] Ninety-five comment letters on the initial proposal were received. Those letters and a summary of the comments are available for public inspection and copying in File No. S7–9–88 at the Commission's Public Reference Room in Washington, DC.

Regulation's rationale but suggested changes to increase the utility of the Regulation, the Commission published a revised Regulation S for comment on July 11, 1989.[4] While many aspects of the Regulation remained the same, some significant changes from the initial proposal were reflected in the reproposal. The primary result of the changes, giving further recognition to the doctrine of comity and the territorial approach to the application of Securities Act section 5, and reassessing the likelihood of flowback of foreign issuers' securities, was a reduction in the restrictions applicable to foreign issuers relying on the safe harbors. Generally, commenters on the Reproposing Release were strongly supportive of the reproposal, and suggested some further modifications.[5]

The Commission today is adopting Regulation S. As noted above, reliance upon Securities Act Release No. 4708 [6] (discussed below) and the no-action and interpretive letters relating thereto is not appropriate for offerings of securities commencing after the ninetieth day following publication of this release in the **Federal Register**. Offers and sales previously made in reliance upon no-action or interpretive letters are not adversely affected by the adoption of Regulation S.

As with the Proposals, the final Regulation consists of a general statement of applicability of the registration provisions (the "General Statement") and two safe harbors.[7] The General Statement provides that section 5 of the Securities Act [8] does not apply to offers or sales of securities that occur outside the United States.[9] In order for a transaction to fall within the provisions of the General Statement, both the sale and the offer relating to that sale must be made outside the United States. The General Statement no longer specifies the factors to be considered in determining the locus of the offer and sale.

As with the Proposals, Regulation S as adopted includes two safe harbors. One safe harbor applies to offers and sales by issuers, securities professionals involved in the distribution process pursuant to contract, their respective affiliates, and persons acting on behalf of any of the foregoing (the "issuer safe harbor"), and the other applies to resales by persons other than the issuer, securities professionals involved in the distribution process pursuant to contract, their respective affiliates (except certain officers and directors), and persons acting on behalf of any of the foregoing (the "resale safe harbor"). An offer, sale or resale of securities that satisfies all conditions of the applicable safe harbor is deemed to be outside the United States within the meaning of the General Statement and thus not subject to the registration requirements of section 5.

Two general conditions apply to the safe harbors. First, any offer or sale of securities must be made in an "offshore transaction," which requires that no offers be made to persons in the United States and that either: (i) The buyer is (or the seller reasonably believes that the buyer is) offshore at the time of the origination of the buy order, or (ii) for purposes of the issuer safe harbor, the sale is made in, on or through a physical trading floor of an established foreign securities exchange, or (iii) for purposes of the resale safe harbor, the sale is made in, on or through the facilities of a designated offshore securities market, and the transaction is not pre-arranged with a buyer in the United States. Second, in no event could "directed selling efforts" be made in the United States in connection with an offer or sale of securities made under a safe harbor. "Directed selling efforts" are activities undertaken for the purpose of, or that could reasonably be expected to result in, conditioning of the market in the United States for the securities being offered. Exceptions to the general conditions are made with respect to offers and sales to specified institutions not deemed U.S. persons, notwithstanding their presence in the United States.

The issuer safe harbor distinguishes three categories of securities offerings, based upon factors such as the nationality and reporting status of the issuer and the degree of U.S. market interest in the issuer's securities. The first category of offerings has been expanded from the Proposals and includes: securities offered in "overseas directed offerings," securities of foreign issuers in which there is no substantial U.S. market interest, securities backed by the full faith and credit of a foreign government, and securities issued pursuant to certain employee benefit plans. The term "overseas directed offerings" (which replaces "overseas domestic offerings" from the Reproposing Release) includes an offering of a foreign issuer's securities directed to any one foreign country, whether or not the issuer's home country, if such offering is conducted in accordance with local laws, offering practices and documentation. It also includes certain offerings of a domestic issuer's non-convertible debt securities, specified preferred stock and asset-backed securities denominated in the currency of a foreign country, which are directed to a single foreign country, and conducted in accordance with local laws, offering practices and documentation. The second category has been revised to include offerings of securities of U.S. reporting issuers and offerings of debt securities, asset-backed securities and specified preferred stock of foreign issuers with a substantial U.S. market interest. The third, residual category has been adopted substantially as reproposed.

The issuer safe harbor requires implementation of procedural safeguards, which differ for each of the three categories, to ensure that the securities offered come to rest offshore. Offerings under the first category may be made offshore under the issuer safe harbor without any restrictions beyond the general conditions. Offerings made in reliance on the other two categories are subject to additional safeguards, such as restrictions on offer and sale to or for the account or benefit of U.S. persons.

The resale safe harbor has been expanded from the Proposals to allow reliance thereon by certain officers and directors of the issuer or distributors. In such a transaction, no remuneration other than customary broker's commissions may be paid. Otherwise, the resale safe harbor is adopted substantially as reproposed. Under the resale safe harbor, dealers and others receiving selling concessions, fees or other remuneration in connection with the offering (such as sub-underwriters) must comply with requirements designed to reinforce the applicable restriction on directed selling efforts in the United States and the offshore transaction requirement. All other persons eligible to rely on the resale safe harbor need only comply with the general conditions.

The safe harbors are not exclusive and are not intended to create a presumption that any transaction failing

---

[4] Securities Act Release No. 6838 (July 11, 1989) [54 FR 30063] (the "Reproposing Release"). The Reproposing Release and the regulations as set forth therein are hereinafter referred to as the "reproposal." The initial proposal and the reproposal of Regulation S are referred to collectively hereinafter as the "Proposals."

[5] Forty-four comment letters on the reproposal were received. Those letters and a summary of the comments are available for public inspection and copying in File No. S7–9–88 at the Commission's Public Reference Room in Washington, DC.

[6] Release No. 33–4708 (July 9, 1964) [29 FR 9828] ("Release 4708").

[7] The Regulation as adopted has been reorganized for purposes of clarity: Rules 903 and 905 of the reproposal have been deleted and their substance moved to adopted Rules 903 and 904.

[8] 15 U.S.C. 77e.

[9] "United States" is defined in Rule 902(p).

to meet their terms is subject to section 5.[10] Reliance on one of the safe harbors does not affect the availability of any exemption from the Securities Act registration requirements upon which a person may be able to rely.

Regulation S relates solely to the applicability of the registration requirements of section 5 of the Securities Act. The Regulation does not limit in any way the scope or applicability of the antifraud or other provisions of the federal securities laws or provisions of state law relating to the offer and sale of securities.

In contrast to the Proposals, the Regulation as adopted applies to offers and sales of securities issued by closed-end investment companies that are registered under the Investment Company Act of 1940 [11] in addition to investment companies that are not required to register under the 1940 Act. The Regulation is not applicable to offers and sales of securities issued by open-end investment companies or unit investment trusts registered or required to register or closed-end investment companies required to register, but not registered, under the 1940 Act. Comment is solicited, however, regarding whether to extend the application of the Regulation to offers and sales of securities by registered mutual funds and unit investment trusts and, if so, the method by which to accomplish such extension.

At or around the time of adoption of this Regulation, the Department of the Treasury is adopting regulations establishing new procedures applicable to foreign-targeted offerings of bearer debt obligations. Persons contemplating issuance of such obligations in reliance on this Regulation are advised to direct their attention also to the Treasury regulations. *See* Treas. Reg. §1.163–5(c).

II. Background and Introduction

The registration requirements of the Securities Act literally apply to any offer or sale of a security involving interstate commerce or use of the mails, unless an exemption is available.[12] The term "interstate commerce" includes "trade or commerce in securities or any transaction or communication relating thereto * * * between any foreign country and any State, Territory or the District of Columbia * * *." [13] The Commission, however, historically has recognized that registration of offerings with only incidental jurisdictional contacts should not be required.[14] In Release 4708, the Commission stated that it would not take any enforcement action for failure to register securities of U.S. corporations distributed abroad solely to foreign nationals, even though the means of interstate commerce were used, if the distribution was effected in a manner that would result in the securities coming to rest abroad.[15]

Numerous procedures were employed after the issuance of Release 4708 to ensure that securities sold in reliance upon the Release were sold to non-U.S. persons and "came to rest" abroad. These procedures frequently were the subject of no-action letters issued by the Commission's staff.[16] The staff also construed Release 4708 to permit resales abroad of securities not acquired in reliance on the Release.[17] The staff did not express any view as to when or under what circumstances securities issued pursuant to Release 4708 could be resold in the United States or to U.S. persons. Rather, the staff indicated that resales could only be made in compliance with the registration requirements of the Securities Act or an exemption therefrom.[18]

The development of active international trading markets and the significant increase in offshore offerings of securities, as well as the significant participation by U.S. investors in foreign markets, present numerous questions under the U.S. securities laws. For companies raising capital abroad, a principal issue under the federal securities laws is the reach across national boundaries of the registration requirements under section 5 of the Securities Act.

The Regulation adopted today is based on a territorial approach to section 5 of the Securities Act.[19] The registration of securities is intended to protect the U.S. capital markets and investors purchasing in the U.S. market, whether U.S. or foreign nationals. Principles of comity [20] and the reasonable expectations of participants in the global markets justify reliance on laws applicable in jurisdictions outside the United States to define requirements for transactions effected offshore.[21] The territorial approach recognizes the primacy of the laws in which a market is located. As investors choose their markets, they choose the laws and regulations applicable in such markets.

In view of the objectives of Regulation S and the policies underlying the Securities Act, the Regulation is not available for any transaction or chain of transactions that, although in technical compliance with the rules, is part of a plan or scheme to evade the registration obligations of the Securities Act.[22] In such cases, registration under the Securities Act would be required.

Regulation S relates solely to the applicability of the registration requirements of section 5 of the Securities Act, and does not limit the scope or extraterritorial application of the antifraud or other provisions of the federal securities laws [23] or provisions of state law relating to the offer and sale of securities.[24] The antifraud provisions have been broadly applied by the courts to protect U.S. investors and investors in U.S. markets where either significant conduct occurs within the United States (the "conduct" test) [25] or the conduct

---

[10] *See* Preliminary Note 5 to Regulation S.

[11] 15 U.S.C. 80a *et seq.* (the "1940 Act"). *See* Preliminary Note 8 to Regulation S.

[12] Securities Act Section 5 [15 U.S.C. 77e]. *See Leasco Data Processing Equipment Corp.* v. *Maxwell*, 468 F.2d 1326, 1335 (2d Cir. 1972); *cf. SEC* v. *United Financial Group, Inc.*, 474 F.2d 354, 357 (9th Cir. 1973).

[13] Securities Act section 2(7) [15 U.S.C. 77b(7)].

[14] *Cf. IIT* v. *Vencap Ltd.*, 519 F.2d 1001, 1016 (2d Cir.) (1975), *quoting Steele* v. *Bulova Watch Co., Inc.*, 344 U.S. 280, 282–283 (1972) (resolution of jurisdictional questions in the securities area "depends on construction of exercised congressional power not the limitations upon that power itself").

[15] Although Release 4708 specifically refers only to domestic issuers, the staff also has applied it to offerings by foreign issuers. *See, e.g., Vizcaya International N.V.* (Apr. 4, 1973); *Republic of Iceland* (Mar. 19, 1971).

[16] *See, e.g., InfraRed Associates, Inc.* (Sept. 13, 1985); *Procter & Gamble Co.* (Feb. 21, 1985); *Fairchild Camera and Instrument International Finance N.V.* (Dec. 15, 1976); *Raymond International Inc.* (June 28, 1976); *Pan American World Airways, Inc.* (June 30, 1975); *The Singer Company* (Sept. 3, 1974).

[17] *See, e.g., College Retirement Equities Fund* (Feb. 18, 1987); *WCRS Group, PLC* (Jan. 8, 1987); *Wordplex Information Systems, PLC* (Dec. 5, 1985); *Trilogy Resource Corporation* (Aug. 3, 1984).

[18] *See, e.g., Proctor & Gamble Co., supra*, n. 16.

[19] Territoriality is a fundamental basis for jurisdiction under both international law, D. Greig, *International Law* 210, 214 (2d ed. 1976), and the foreign relations law of the United States. Rest. 3rd, *Restatement of the Foreign Relations Law of the United States* section 402 (1987) ("Revised Restatement"); *Restatement Foreign Relations Law of the United States* section 10 (1965) ("Second Restatement"). *See also* W. Bishop, International Law 535 (1962); ALI Fed. Sec. Code section 905, Comments 3(b), 4 (1980) ("ALI Code").

[20] The doctrine of comity emphasizes restraint and tolerance by nations in international affairs. *See generally*, L. Oppenheim, I *International Law* 34 (H. Lauterpacht ed., 8th ed. 1955). *See also* 1 H. Lauterpacht, International Law 44–46 (1970); *Offshore Funds and Rule 10b–5: An International Law Approach to Extraterritorial Jurisdiction Under the Securities Exchange Act of 1934*, 8 Fordham Int'l L. J. 410 (1984–1985), *citing* Akehurst, *Jurisdiction in International Law*, 1972–1973 Brit. Y.B. Int'l L. 214–215; I. Brownlie, *Principles of Public International Law* 31 (3d ed. 1979).

[21] As stated in the Proposing Release, offers and sales made in Canada will be treated in the same way as those made in any other foreign jurisdiction.

[22] Preliminary Note 2 to Regulation S.

[23] *See* Preliminary Notes 1 and 3 to Regulation S.

[24] *See* Preliminary Note 4 to Regulation S.

[25] *E.g., SEC* v. *Kasser*, 548 F.2d 109, 114 (3d Cir.), *cert. denied*, 431 U.S. 938 (1977); *IIT* v. *Vencap, Ltd.*,

Continued

occurs outside the United States but has a significant effect within the United States or on the interests of U.S. investors (the "effects" test).[26] It is generally accepted that different considerations apply to the extraterritorial application of the antifraud provisions than to the registration provisions of the Securities Act.[27] While it may not be necessary for securities sold in a transaction that occurs outside the United States, but touching this country through conduct or effects, to be registered under United States securities laws, such conduct or effects have been held to provide a basis for jurisdiction under the antifraud provisions of the United States securities laws.

III. Discussion of Regulation S

A. General Statement

Rule 901(a) is a general statement of the applicability of the registration provisions of the Securities Act. The General Statement provides that any offer, offer to sell, sale, or offer to buy that occurs within the United States is subject to section 5 of the Securities Act, while any such offer or sale that occurs outside the United States is not subject to section 5.[28] The determination as to whether a transaction is outside the United States will be based on the facts and circumstances of each case. If it can be demonstrated that an offer or sale of securities occurs "outside the United States," the registration provisions of the Securities Act will not apply, regardless of whether the conditions of the safe harbor are met. For a transaction to qualify under the General Statement, both the sale and the offer pursuant to which it was made must be outside the United States.

Unlike the Proposals, the General Statement does not list the factors to be considered in determining whether an offer or sale occurs outside the United States. Commenters expressed concern with regard to various aspects of the factors listed in the Proposals. In response to the Commission's request for comment in the Reproposing Release, a number of commenters recommended that the entire list of factors be deleted from the General Statement. Since the list was included in the Proposals to provide assistance to persons relying on the General Statement to demonstrate an offer or sale was made outside the United States, it has been deleted from the Regulation in light of the commenters' assessment that the list would not be helpful.

B. Safe Harbors

Rules 903 and 904 set forth non-exclusive safe harbors for extraterritorial offers, sales and resales of securities. The safe harbors include conditions to protect against indirect, unregistered, non-exempt offerings into the U.S. capital markets.

An offer or sale by an issuer, a distributor, an affiliate of either, or any person acting on behalf of any of the foregoing, that meets the applicable conditions of the issuer safe harbor (Rule 903) is outside the United States for the purposes of Rule 901. For purposes of the Regulation, the term "distributor" [29] includes all underwriters, dealers,[30] and other persons who are participating in a distribution of securities pursuant to contractual arrangements, such as sub-underwriters, but does not include persons participating pursuant to contract only in ancillary positions, such as fiscal agents or persons hired to perform clearing services.

Distributors and their affiliates are not prevented by the Regulation from engaging in secondary transactions in securities of the same class being distributed, provided the securities are not borrowed or replaced with shares from the offering. Once the distribution has ended and any applicable restricted period [31] specified in Rule 903 has expired, distributors that have sold their allotments will no longer have distributor status and therefore will be able to use Rule 904's resale safe harbor. So long as a distributor still holds some portion of its allotment, it will continue to be unable to rely on Rule 904 with respect to the offer and sale of the unsold allotment.[32]

The resale safe harbor is available for offers and sales by all persons except an issuer, a distributor, an affiliate of either (other than specified officers and directors), and any person acting on behalf of any of the foregoing. An offer or sale that meets the applicable conditions of Rule 904 is outside the United States for the purposes of Rule 901. Unlike the reproposal, resales of securities by officers and directors who may be affiliates of the issuer or distributor, and thus would have been ineligible to use the resale safe harbor, may be made in reliance upon that safe harbor provided specified conditions are met.[33] Of course, the resale safe harbor is not available for such officers and directors if they are being used as conduits to sell securities for persons ineligible to rely upon the resale safe harbor.

1. General Conditions

Two general conditions apply to all offers, sales and resales made in reliance on the safe harbors.[34] First, such an offer or sale must be made in an "offshore transaction." Second, no "directed selling efforts" may be made in the United States in connection with an offer or sale of securities in reliance on such safe harbors.

a. *Requirement of offshore transaction.* An "offshore transaction" [35] is a transaction in which no offer is made to a person in the United States and either of two additional sets of requirements is met.[36]

---

519 F.2d 1001 (2d Cir. 1975); *Leasco Data Processing Equipment Corp. v. Maxwell*, 468 F.2d 1326 (2d Cir. 1972).

[26] *E.g., Consolidated Gold Fields PLC v. Minorco, S.A.*, 871 F.2d 252 (2d Cir.), *cert. dismissed*, 110 S. Ct. 29 (1989); *Des Brisay* v. *Goldfield Corp.*, 549 F.2d 133 (9th Cir. 1977); *Schoenbaum* v. *Firstbrook*, 405 F.2d 200, *rev'd on other grounds*, 405 F.2d 215 (2d Cir. 1968) (*en banc*), *cert. denied*, 395 U.S. 906 (1969).

The "conduct" and "effects" tests, either of which can independently support a finding of jurisdiction under the antifraud provisions of the federal securities laws, are derived from the Second Restatement. *See also* ALI Code section 1905.

[27] *Consolidated Gold Fields PLC v. Minorco, S.A.*, *supra* n. 26 at 262–263; *Bersch* v. *Drexel Firestone Inc.*, 519 F.2d 974, 986 (2d Cir.), *cert. denied*, 423 U.S. 1018 (1975) ("It is elementary that the antifraud provisions of the federal securities laws apply to many transactions which are neither within the registration requirements nor on organized American markets"); *see also IIT* v. *Cornfeld*, 619 F.2d 909, 921 (2d Cir. 1980); Johnson, *Application of the Federal Securities Laws to International Securities Transactions*, 45 Alb. L. Rev. 890, 925–926 (1981).

[28] *See* ALI Code, section 1905(a)–(b).

[29] Rule 902(c).

[30] The term "dealer," as defined in section 2(12) of the Securities Act [15 U.S.C. 77b(12)], encompasses those who engage in the business of securities trading or dealing as agent, broker or principal.

[31] "Restricted period" is defined in Rule 902(m).

[32] A distributor holding an unsold allotment of securities in a segregated identifiable account may sell as a nondistributor other securities of the same class, so long as such securities were not borrowed from and will not be replaced by securities that are part of the unsold allotment.

[33] *See infra* n. 138 and accompanying text.

[34] *See* Rules 903(a)–(b) and 904(a)–(b).

[35] Rule 902(i). The offshore transaction definition has been revised from the reproposal to make clear that offers specifically targeted at identifiable groups of U.S. citizens abroad, such as members of the armed forces serving overseas, will be deemed made within the United States. *See* Rule 902(i)(2). Such targeted offerings also will be deemed to constitute directed selling efforts in the United States.

[36] *But see infra* n. 122 and accompanying text discussing offers and sales deemed to be made in "offshore transactions" to certain professional fiduciaries or multinational organizations in the United States who are defined not to be U.S. persons. Offers made in the United States in connection with contemporaneous registered offerings or offerings exempt from registration will not preclude reliance on the safe harbors.

The first alternative requires at the time the buy order is originated, that the buyer be outside the United States (or the seller and any person acting on its behalf reasonably believe that the buyer is outside the United States).[37] The second alternative covers certain transactions executed in, on or through the facilities of a designated offshore securities market [38] (unless the seller or a person acting on its behalf knows that the transaction was pre-arranged with a buyer in the United States) and certain transactions executed in, on or through the physical trading floor of an established foreign securities exchange located outside the United States.

The first alternative focuses on the location of the buyer for two reasons. First, the location of the buyer overseas clearly and objectively provides evidence of the offshore nature of the transaction. The requirement that the buyer itself, rather than its agent, be outside the United States reduces evidentiary difficulties and problems in administering the Regulation, both for regulators and private parties attempting to ensure compliance with the conditions of the safe harbor. Second, the buyer's location outside the United States supports the expectation that the buyer is or should be aware that the transaction is not subject to registration under the Securities Act.

When the buyer is a corporation or partnership, if an authorized employee places the buy order while abroad, the requirement that the buyer be outside the United States will be satisfied.[39] When the buyer is an investment company, if an authorized person employed by either such company or its investment adviser places the buy order outside the United States, the requirement that the buyer be outside the United States will be satisfied.

The second alternative definition of "offshore transaction" provides that certain transactions executed in, on or through certain offshore securities markets are offshore transactions, without regard to the location of the person originating the buy order. In order to be considered a sale of securities in, on or through the facilities of an offshore securities market, the sale must be effected outside the United States under the auspices and supervision of such a securities market, by or through a member of such market or any other person authorized to effect such sales thereon.[40] Such execution of a transaction in a foreign marketplace provides objective evidence of the foreign locus of the transaction.[41] Moreover, buyers in such markets may be presumed to rely on the regulatory protections afforded by local law and not U.S. registration requirements.

The definition of "offshore transaction" has been revised in order to clarify that reliance on designated offshore securities market trading, where neither the seller nor any person acting on its behalf knows that the transaction has been pre-arranged with a buyer in the United States, to satisfy the requirement was contemplated only for secondary trading under the resale safe harbor. Nevertheless, to accommodate the infrequent practice of conducting primary offerings (offerings by the issuer, a distributor, any of their respective affiliates, and any persons acting on behalf of any of the foregoing) on the offshore physical trading floors of established foreign securities exchanges, the definition also has been revised to allow satisfaction of the offshore transaction requirement by such primary offerings.[42]

For secondary trading under the resale safe harbor, the Regulation as adopted combines exchange and non-exchange markets within one term.[43] As adopted, "designated offshore securities markets" includes a list of seventeen foreign securities markets as well as any other organized foreign securities markets that may be designated subsequently by the Commission.

In order to qualify as a "designated organized foreign securities market" under the reproposal, a market had to be organized under foreign law, have an established operating history, and be overseen by a governmental or self-regulatory body to which securities transactions are reported on a regular basis. Commenters expressed concern that such factors would preclude certain organized foreign markets from qualifying. Each factor was supported by some commenters and criticized by others. As adopted, in addition to the list of foreign securities markets, the definition of designated offshore securities market refers to organized foreign markets and provides a non-exclusive list of attributes that will be considered by the Commission in designating such foreign markets.[44] The existence of all the listed attributes is not requisite to a designation and no single attribute is required. As stated in the Reproposing Release, designation of such organized foreign securities markets will be done on a case-by-case basis by the Commission [45] through the interpretive letter process.[46] The Commission will make its determination regarding designation upon consideration of all the facts pertaining to a particular market.

b. *Directed selling efforts.* A person making an offer or sale otherwise in accordance with the conditions of the issuer safe harbor will be unable to rely on the provisions of the safe harbor if any directed selling efforts are being made in the United States by an issuer,

---

[37] Unlike the initial proposal, execution and delivery of the transaction outside the United States are not required in order to satisfy the first alternative definition of offshore transaction.

[38] Rule 902(a).

[39] There would be no need to consider where the investment decision leading to the transaction was made.

[40] Transactions in, on or through the facilities of a designated offshore securities market include all transactions reported to such market. Trades executed between sessions, reported to the exchange and included in exchange trading volume, will be deemed on that market.

[41] Through trading linkages, orders placed for execution on a foreign securities exchange may, in fact, be executed on a U.S. exchange. The one linkage that exists today, between the Montreal and Boston Stock Exchanges, is intended to provide only supplemental best execution capability in linkage stocks, and the transactions generally are executed in the market where the order is placed. For these reasons, transactions executed on a U.S. exchange by means of this trading linkage, as currently structured, will be deemed to have been executed on the Montreal Stock Exchange. The locus of transactions executed through trading linkages will be determined in the future by the nature of the linkage, the procedures used for order routing and the manner in which the linkage is used.

[42] *See* Rule 902(i)(1)(ii)(B)(*1*). *See also* Proposing Release discussion of "established foreign securities exchanges" (53 FR at 22669).

[43] The reproposal divided foreign markets by use of the terms "established foreign securities exchanges" and "designated organized foreign securities markets."

[44] Rule 902(a)(2).

[45] The Commission is delegating authority to the Division or Corporation Finance to designate the markets described in Rule 902(a)(2) in consultation with the Division of Market Regulation. The rule providing for delegation of authority to the Director of the Division of Corporation Finance (17 CFR 200.30–1) therefore is being amended by virtue of this release.

[46] The following markets are included within the definition of "designated offshore securities markets:" the Eurobond market, as regulated by the Association of International Bond Dealers; the Amsterdam Stock Exchange; the Australian Stock Exchange; the Bourse de Bruxelles; the Frankfurt Stock Exchange; The Stock Exchange of Hong Kong Limited; The International Stock Exchange of the United Kingdom and the Republic of Ireland, Ltd.; the Johannesburg Stock Exchange; the Bourse de Luxembourg; the Borsa Valori di Milan; the Montreal Stock Exchange; the Bourse de Paris; the Stockholm Stock Exchange; the Tokyo Stock Exchange; the Toronto Stock Exchange; the Vancouver Stock Exchange; and the Zurich Stock Exchange. *See* Rule 902(a)(1). The list has been derived from those markets designated as ready markets under Rule 15c3–1 under the Exchange Act. Additional designations will be considered on request.

Commenters on the Reproposing Release suggested that foreign government securities markets be designated. Since more information about the aspects of those markets that give them a foreign locus is needed prior to designation, the Commission will consider such markets on a case-by-case basis under the designation process.

a distributor, any of their respective affiliates, or any person acting on behalf of any of the foregoing.[47] With respect to resales under Rule 904, a directed selling effort by the seller, any of its affiliates, or any person acting on behalf of either, will preclude reliance on the resale safe harbor by that seller; directed selling efforts by any other person will not affect the seller's ability to rely on the resale safe harbor.

Under the issuer safe harbor, directed selling efforts in the United States may not be made during the period the issuer, the distributors, their respective affiliates or persons acting on behalf of any of the foregoing, are offering [48] and selling the securities and, for offerings under the second and third safe harbor categories, during the restricted period as well.

"Directed selling efforts" are those activities that could reasonably be expected, or are intended, to condition the market with respect to the securities being offered in reliance upon the Regulation. This provision precludes, *inter alia*, marketing efforts in the United States designed to induce the purchase of the securities purportedly being distributed abroad. Activities such as mailing printed material to U.S. investors,[49] conducting promotional seminars in the United States,[50] or placing advertisements with radio or television stations broadcasting into the United States or in publications with a general circulation in the United States, which discuss the offering or are otherwise intended to condition, or could reasonably be expected to condition, the market for the securities purportedly being offered abroad, constitute directed selling efforts in the United States.

Publications with a general circulation in the United States, as defined in the Regulation, include all publications printed primarily for distribution in the United States, and all publications that, on average during the preceding 12 months, have had a circulation in the United States of 15,000 copies or more per issue.[51] Where a foreign publication produces a separate edition that in itself has a general circulation in the United States, only the U.S. edition will be considered a publication with a general circulation in the United States if the affiliated non-U.S. editions together do not meet the definition when the U.S. edition is disregarded.[52]

The definition of directed selling efforts specifically excludes several forms of advertisements.[53] First, an advertisement will not be deemed a directed selling effort under the Regulation if publication of the advertisement is required by foreign or U.S. law or the rules or regulations of a U.S. or foreign regulatory or self-regulatory authority, such as a stock exchange, provided that the advertisement contains no more information than legally required and includes a statement to the effect that the securities have not been registered under the Securities Act and may not be offered or sold in the United States (or to a U.S. person, if the advertisement relates to an offering under the second or third issuer safe harbor categories) absent registration or an applicable exemption from the registration requirements.[54]

Second, to ameliorate the effect of the Regulation on a foreign publication's advertising practices where the United States accounts for a limited portion of its circulation, the definition of directed selling efforts excludes tombstone advertisements in a publication if less than 20% of its circulation, calculated by aggregating its U.S. and comparable non-U.S. editions,[55] is in the United States. To qualify, a tombstone advertisement must: (i) include a legend to the effect that the securities have not been registered under the Securities Act and may not be offered or sold in the United States (or to a U.S. person, if the advertisement relates to an offering under the second or third issuer safe harbor categories) absent registration or an applicable exemption from the registration requirements; and (ii) include no more information than: the issuer's name; the amount and title of the securities being sold; a brief indication of the issuer's general type of business; the price of the securities; the yield of the securities, if debt securities with a fixed (non-contingent) interest provision; the name and address of the person placing the advertisement and whether such person is participating in the distribution; the names of the managing underwriters; the dates, if any, upon which the sales commenced and concluded; whether the securities are offered by rights issued to security holders and, if so, the class of securities entitled to subscribe, the subscription ratio, the record date, the dates (if any) upon which the rights were issued and expired, and the subscription price; and any legend required by law or any foreign or U.S. regulatory or self-regulatory authority.[56]

Distribution or publication in the United States of information, opinions or recommendations concerning the issuer or any class of its securities could constitute directed selling efforts, depending upon the facts and circumstances.[57] Directed selling efforts will not be deemed to exist, however, if the information, opinion or recommendation of a distributor or its affiliate with respect to a reporting issuer:[58] (i) Is contained in a publication that is distributed with reasonable regularity in its normal course of business, and includes similar information, opinions or recommendations in that issue with respect to a substantial number of companies in the issuer's industry or sub-industry, or contains a comprehensive list of securities recommended by such entity; (ii) is given no materially greater space or prominence in such publication than that given to securities of other issuers; and (iii) with respect to an opinion or

---

[47] *But see infra* n. 121 and accompanying text discussing contacts deemed to be excluded from the definition of "directed selling efforts" with certain professional fiduciaries or multinational organizations in the United States who are defined not to be U.S. persons. Offering activities in contemporaneous registered offerings or offerings exempt from registration will not preclude reliance on the safe harbors.

[48] Once directed selling efforts are begun, offers of the securities necessarily will have commenced, if not before.

[49] *Cf. In the Matter of First Maine Corp.*, 38 SEC 882 (1959) (Advertisements including information regarding prospective offerings violated section 5(c) of the Securities Act) [15 U.S.C. 77e(c)]; *SEC* v. *Commercial Investment and Development Corporation of Florida*, 373 F. Supp. 1153 (S.D. Fla. 1974) (Newsletter distributed to existing shareholders touting a proposed public offering violated section 5(c) of the Securities Act).

[50] *Cf. SEC* v. *The Firestone Group, Ltd* [1969–70 Transfer Binder] Fed. Sec. L. Rep. (CCH) ¶92,728 at 99,191 (D.D.C. 1970) (Promotional seminars conducted in violation of section 5(c) of the Securities Act).

[51] *See* Rule 902(k)(1).

[52] *See* Rule 902(k)(2).

[53] Activities specifically excluded from the definition of directed selling efforts also will not be deemed offers in the United States for purposes of the Regulation.

[54] Rule 902(b)(2).

[55] The *Financial Times*, for example, publishes an international edition that circulates in the United States and a "comparable" U.K. edition. The U.K. and international editions are comparable in that the only differences between them are that pages of news items of primarily local interest in the U.K. and multi-page prospectuses directed solely to U.K. residents are removed from the international edition and minor textual changes are made from the U.K. edition to clarify references for international readers. Thus, the circulation of the international edition and the circulation of the U.K. edition would be aggregated.

[56] *See* Rule 902(b)(4). Such information is similar to information that would be permitted for advertisements made in compliance with Rule 134 under the Securities Act [17 CFR 230.134].

[57] Such activity also could be deemed as offer in the United States which would violate the offshore transaction requirement.

[58] "Reporting issuer" is defined in Rule 902(*l*).

recommendation, is no more favorable to the issuer than the opinion or recommendation published by the entity in its last issue addressing the issuer or its securities.[59] When the issuer is not a reporting issuer, the effect on the market of publication or distribution of information, opinions or recommendations about the issuer or its securities can be expected to be more significant due to the possible absence of other publicly available information about the issuer. Distributors and their affiliates should exercise even greater caution in publication or distribution of information, opinions or recommendations concerning non-reporting issuers or their securities.

An isolated, limited contact with the United States generally will not constitute directed selling efforts that result in a loss of the safe harbor for the entire offering.[60] The Regulation likewise is not intended to inhibit routine activities conducted in the United States for purposes other than inducing the purchase or sale of the securities being distributed abroad, such as routine advertising and corporate communications.[61] The dissemination of routine information of the character and content normally published by a company, and unrelated to a securities selling effort, generally would not be directed selling efforts under the Regulation. For example, press releases regarding the financial results of the issuer or the occurrence of material events with respect to the issuer generally will not be deemed to be "directed selling efforts."[62]

Similarly, the Regulation is not intended to limit or interfere with news stories or other bona fide journalistic activities, or otherwise hinder the flow of normal corporate news regarding foreign issuers. Access by journalists for publications with a general circulation in the United States to offshore press conferences, press releases and meetings with company press spokespersons in which an offshore offering or tender offer is discussed need not be limited where the information is made available to the foreign and U.S. press generally and is not intended to induce purchases of securities by persons in the United States or tenders of securities by U.S. holders in the case of exchange offers. A Preliminary Note to such effect has been added to the Regulation as adopted.[63]

Legitimate selling activities carried out in the United States in connection with an offering of securities registered under the Securities Act or exempt from registration pursuant to the provisions of section 3 or 4 of the Securities Act will not constitute directed selling efforts with respect to offers and sales made under Regulation S.[64]

The Regulation generally will not interfere with activities conducted outside the United States, if such activities are legal and customary in the foreign jurisdiction. Such activities may relate to a foreign distribution [65] or to the ordinary course of an issuer's business. In this regard, activities carried out abroad such as advertising in newspapers or magazines with no general circulation in the United States or granting interviews or conducting promotional seminars outside the United States and not targeted to the United States will not preclude reliance on the Regulation's safe harbor.

The "directed selling efforts" definition does not preclude investigation of investment opportunities offered and sold offshore. Bona fide site visits to real estate, plants, or other facilities located in the United States and tours thereof conducted for a prospective investor by an issuer, a distributor, any of their respective affiliates, or a person acting on behalf of any of the foregoing, are not directed selling efforts.[66]

As noted in the Proposals,[67] the scope of directed selling efforts under Regulation S is not coextensive with activities constituting "solicitation," as that term is used in considering the need for registration as a broker-dealer under the Securities Exchange Act of 1934.[68] In a recent Release regarding the applicability of U.S. broker-dealer registration requirements to foreign entities, and adopting Exchange Act Rule 15a–6,[69] the concept of solicitation was defined by the Commission as "including any affirmative effort by a broker or dealer intended to induce transactional business for the broker-dealer or its affiliates." [70] Among the examples of solicitation noted in that Release were efforts to induce a single transaction, telephone calls from a broker-dealer to a customer encouraging use of the broker-dealer to effect transactions, and transmission of information, opinions, or recommendations to particular investors in the United States, whether directed at individuals or groups. While limited activities directed at a single customer or prospective investor may be offers for purposes of Regulation S or solicitation for purposes of Rule 15a–6, they generally will not constitute directed selling efforts for purposes of the Regulation because of their confined effect.

The dissemination in the United States of a broker-dealer's quotations for a security being offered and sold in reliance on the Regulation could be deemed a directed selling effort. Questions regarding this aspect of "directed selling efforts" typically will be decided on an individual interpretive basis.[71] Current U.S. distribution of foreign broker-dealers' quotations by third-party systems, *e.g.*, systems operated by foreign marketplaces or by private vendors, that distribute such quotations primarily in foreign countries will not be deemed directed selling efforts or an offer, provided that: (i) Securities transactions cannot be executed between foreign broker-dealers and persons in the United States through the systems; and (ii) the issuer, distributors, their respective affiliates, persons acting on behalf of any of the foregoing, foreign broker-dealers and other participants in the systems do not initiate contacts with U.S. persons or

[59] This situation is similar to the safe harbor from sections 2(10) and 5(c) concepts of "offer for sale" and "offer to sell" established in Rule 139 under the Securities Act (17 CFR 230.139) for brokers or dealers participating in a distribution who publish or distribute information, opinions or recommendations about the issuer or any class of its securities.

[60] Such a contact could constitute an offer in the United States. *See infra* text accompanying nn. 67–70.

[61] *Cf.* Securities Act Release Nos. 4697 (May 28, 1964) [29 FR 7317] and 5009 (Oct. 7, 1969) [34 FR 16870], which address the Commission's view that Section 5(c) of the Securities Act is not intended to restrict normal communications between an issuer and its stockholders.

[62] 53 FR at 22667. *See also* Securities Act Release Nos. 3844 (Oct. 8, 1957) [22 FR 8359] and 5009 (Oct. 7, 1969) [34 FR 16870]. However, where a company did not have a history of disseminating routine corporate communications or product advertising and disseminated such information shortly before or during an offshore offering, the activities might constitute directed selling efforts.

[63] *See* Preliminary Note 7 to Regulation S.

[64] For example, legitimate U.S. selling activities made in connection with the sale of securities in compliance with Rule 144A [17 CFR 230.144A], or in a private placement exempt under section 4(2) [15 U.S.C. 77d(2)] or Rule 506 [17 CFR 230.506] generally will not result in directed selling efforts.

[65] Several commenters expressed concern that, given the prohibition against directed selling efforts, U.S. issuers or distributors would be unable to rely upon the Regulation if they initiated sales communications to non-U.S. persons from the United States. The prohibition against directed selling efforts made in the United States does not preclude such activities.

[66] *See* Rule 902 (b)(5).

[67] 53 FR at 22667, n. 84; 54 FR at 30065.

[68] 15 U.S.C. 78 a *et seq.* (the "Exchange Act").

[69] 17 CFR 240.15a–6.

[70] Exchange Act Release No. 27017 (July 11, 1989).

[71] Quotations on the PORTAL system will not be deemed to result in directed selling efforts for purposes of Regulation S.

persons within the United States, beyond those contacts exempted under Rule 15a–6.[72] The direct dissemination of a foreign market maker's quotations to U.S. persons or persons within the United States, such as through a private quotation system controlled by a foreign broker-dealer, will, consistent with Rule 15a-6, be viewed as both an offer and a directed selling effort under Regulation S given that such dissemination is done directly and exclusively for the purpose of inducing purchases of the securities.

2. Issuer Safe Harbor

The issuer safe harbor [73] is available for issuers, distributors, their respective affiliates, and persons acting on behalf of any of the foregoing. The issuer safe harbor distinguishes among three classes of securities, with varying procedural safeguards imposed to have the securities offered come to rest offshore. The criteria used to divide securities into three groups, such as nationality and reporting status of the issuer and the degree of U.S. market interest in the issuer's securities, were chosen because they reflect the likelihood of flowback into the United States and the degree of information available to U.S. investors regarding such securities.

Commenters on the Proposals questioned the treatment of guaranteed debt securities for purposes of the three issuer safe harbor categories. Their concern arises when the guarantees and guaranteed securities would fall into different issuer safe harbor categories by virtue of the differing characteristics of the issuers. Where the securities are fully and unconditionally guaranteed by the parent of the issuer, the status of the parent will govern.[74] Thus, if a foreign subsidiary of a reporting U.S. parent company makes an offering in Europe and Asia of debt securities fully and unconditionally guaranteed by the parent, the securities will fall in the second issuer safe harbor category. In the case of full and unconditional guarantees by multiple parents of an issuer of debt securities, the status of the ultimate parent will govern. For example, if a U.S. company, which is wholly owned by a U.S. subsidiary of a foreign issuer with no substantial U.S. market interest in its debt securities, makes an offering of debt securities fully and unconditionally guaranteed by its direct and indirect parents, the securities will fall in the first category. Debt securities of any issuer fully and unconditionally backed by the full faith and credit of a foreign government, directly or by guarantee, fall into the first category. Generally, other offerings of guaranteed securities will be subject to the most restrictive of the categories applicable to the guaranteed security and any guarantees.

For purposes of applying restricted periods [75] under the issuer safe harbor, convertible securities generally are treated as the security into which they are convertible.[76] However, where the securities are not convertible before any applicable restricted period would have ended if such underlying securities had themselves been offered and sold under Rule 903, the restricted period will be determined by the convertible security. Thus, an offering of convertible debt securities by a foreign issuer with substantial U.S. market interest in its debt and equity securities would fall within the second category of the issuer safe harbor if the debt securities are not convertible for 13 months but would fall within the third issuer safe harbor category if the debt securities were convertible after 11 months.

For purposes of the determination of whether substantial U.S. market interest exists, the measurement is made both by reference to the convertible security and the underlying security.[77] If substantial U.S. market interest exists in either, there is substantial U.S. market interest in the convertible securities.

Questions also have been raised as to the status of unit securities offerings under the issuer safe harbor. For purposes of determining the applicable issuer safe harbor category within Rule 903, the units offering generally would be analyzed as if it were an offering of each security separately and the most restrictive category applicable will govern the units offering. If, however, the securities comprising the units may be separately traded immediately after issuance, to the extent feasible the restrictions of the issuer safe harbor may be applied as if the securities comprising the units were distributed in separate offerings. Where a unit comprised of both debt and equity securities is offered and sold under the third category of the issuer safe harbor, the restricted period applicable to equity will apply to the debt portion unless the securities comprising the unit may be separately traded immediately after issuance, in which case the debt and equity securities have their separate applicable restricted periods.

a. Category 1: Foreign issuers with no substantial U.S. market interest; overseas directed offerings; securities backed by the full faith and credit of a foreign government; employee benefit plans. The first issuer safe harbor category is available for offers and sales of securities of foreign issuers [78] with no "substantial U.S. market interest" for their securities,[79] securities offered and sold in "overseas directed offerings," [80] securities backed by the full faith and credit of a foreign government,[81] and securities offered and sold pursuant to certain employee benefit plans. Securities issued by foreign entities that do not have a substantial U.S. interest in their securities may be expected to flow back or remain in their major or home market, and are not likely to flow into the United States following an offshore offering. Flowback concerns also are limited where securities of a foreign issuer, even with a substantial U.S. market, are offered and sold in an offering directed at residents of a single foreign jurisdiction and conducted in accordance with local laws, and customary local practices and documentation. Flowback concerns are reduced where a U.S. issuer's non-convertible debt securities, asset-backed securities and non-participating preferred stock denominated in a currency other than U.S. dollars are

[72] *See* Rule 902 (b)(6). In the context of the broker-dealer registration requirements, section 15 (a)(1) of the Exchange Act [15 U.S.C. 78*o*(a)(1)], the staff has given assurances that enforcement action for failure to register would not be recommended when market makers' quotations are merely collected and distributed in the United States by a foreign exchange and substantial U.S. contacts or solicitations of U.S. investors are lacking. *See* Exchange Act Release No. 27017 (July 11, 1989) [54 FR 30013, 30018, n. 63 and accompanying text].

[73] Rule 903.

[74] *See* Rule 903(c)(5).

[75] Where a conversion exempt under section 3(a)(9) of the Securities Act [15 U.S.C. 77c(a)(9)] takes place during the restricted period, the securities issued on conversion will be restricted for the remainder of the restricted period. A conversion generally would be exempt from registration under section 3(a)(9) except where compensation is paid on conversion or the security is that of a different issuer. Where the exemption is not available, the same analysis as applies to the exercise of warrants under Regulation S would apply to conversion. *See infra* nn. 126–128 and accompanying text.

[76] *See Sperry Rand Corporation* (Mar. 1, 1974); *cf.* Rule 405 [17 CFR 230.405]. *But see infra* n. 106 and accompanying text regarding treatment of convertible non-participating preferred stock.

[77] *See* Rule 903(c)(1)(i)(D).

[78] The definition of "foreign issuer" in Rule 902(f) is essentially the same as that used in Rule 405 under the Securities Act [17 CFR 230.405].

[79] Rule 902(n). For a discussion of the term "substantial U.S. market interest," *see infra* nn. 86–94 and accompanying text.

[80] Rule 902(j). For a discussion of the term "overseas directed offering," *see infra* nn. 95–99 and accompanying text.

[81] "Foreign government" is defined to include the government of any foreign country or of any political subdivision of a foreign country, provided that such person would qualify to register securities under the Securities Act on Schedule B. *See* Rule 902(e). *See also* Rule 405 under the Securities Act [17 CFR 230.405].

offered and sold in an offering directed at residents of a single foreign jurisdiction, and the offering is conducted in accordance with local laws, and customary local practices and documentation.[82] Securities offered and sold pursuant to employee benefit plans established and administered under foreign law are less likely to flow back into the United States where steps are taken to preclude sales to U.S. residents (other than employees on temporary assignment in the United States) and other conditions specified in the Regulation are met.[83]

Offers and sales of securities included in this category may be made in reliance on the safe harbor without any limitations or restrictions other than the general conditions that the transaction be offshore and that no directed selling efforts be made in the United States.[84] Offers and sales of securities to U.S. investors who are overseas at such time will not preclude reliance on the safe harbor for securities in this category. Of course, trading of a substantial amount of such securities in the United States shortly after they had been offered offshore may indicate a plan or scheme to evade the registration provisions; where a transaction is part of such a plan or scheme, Regulation S is not available.[85]

(1) "Substantial U.S. market interest". The definition of substantial U.S. market has been revised in response to comments on the reproposal. The safe harbor incorporates a reasonable belief standard as to the existence of substantial U.S. market interest; trading is measured under the definition of substantial U.S. market interest on a country-by-country basis, rather than market-by-market; and a percentage test has been added to the debt securities criteria.

A "substantial U.S. market interest" [86] in a class of a foreign issuer's equity securities is defined to exist where at the commencement of the offering (a) the securities exchanges and inter-dealer quotation systems [87] in the United States in the aggregate [88] constitute the single largest market for such securities in the shorter of the issuer's prior fiscal year or the period since the issuer's incorporation [89] or (b) 20 percent or more of the trading in the class of securities took place in, on or through the facilities of securities exchanges and inter-dealer quotation systems in the United States and less than 55 percent of such trading took place in, on or through the facilities of securities markets of a single foreign country in the shorter of the issuer's prior fiscal year or the period since the issuer's incorporation.

Commenters on the Reproposing Release expressed concern that defining substantial U.S. market interest by use of percentage and numerical tests would present difficulties because records of trading in an issuer's equity securities may be inaccessible or incomplete. In response to those concerns, the Regulation as adopted permits an issuer to rely upon its reasonable belief as to the existence of a substantial U.S. market interest. Where a foreign or domestic market does not record all trading in a security, only the trading that is recorded (to the extent such information is available to the issuer), is otherwise known to the issuer, or can be reasonably measured or approximated need be considered. Where a substantial market for the issuer's equity securities does not record trading volume, the issuer may reasonably believe there is not a substantial U.S. market interest in that class of securities where less than 20 percent of the class is held of record by persons for whom a U.S. address appears on the records of the issuer, its transfer agent, voting trustee, depositary or person performing similar functions.[90]

A "substantial U.S. market interest" in an issuer's debt securities is dependent upon the aggregation of three types of securities. In addition to traditional debt securities, outstanding non-convertible capital stock, the holders of which are entitled to a preference in payment of dividends and in distribution of assets on liquidation, dissolution or winding up of the issuer, but are not entitled to participate in residual earnings or assets of the issuer (referred to hereinafter as "non-participating preferred stock"), is now included in the measurement of U.S. market interest in debt. The measurement also takes account of securities of a type (referred to hereinafter as "asset-backed securities") that either: (a) Represents an ownership interest in a pool of discrete assets, or certificates of interest or participation in such assets (including any rights designed to assure servicing, or the receipt or timeliness of receipt by holders of such assets, or certificates of interest or participation in such assets, of amounts payable thereunder), provided that the assets are not generated or originated between the issuer of the security and its affiliates; or (b) are secured by one or more assets or certificates of interest or participation in such assets, and such securities, by their terms, provide for payments of principal and interest (if any) in relation to payments or reasonable projections of payments on assets meeting the requirements of (a) above, or certificates of interest or participations in assets meeting such requirements. "Assets," as used in the description of asset-backed securities, include: securities, installment sales, accounts receivable, notes, leases or other contracts, or other assets that by their terms convert into cash over a finite period of time.

With respect to debt securities, substantial U.S. market interest is measured at the commencement of the offering and is defined as: (A) The issuer's debt securities, its nonparticipating preferred stock and its asset-backed securities, in the aggregate, being held of record [91] by 300

---

[82] *See infra* nn. 97–98, 106–108 and accompanying text. Reference throughout this release to local and customary practices and documentation is not intended to mean practices and documentation only as they exist at the time of adoption of the Regulation, without regard to future changes in such practices and documentation. Further, more than one type of practice or documentation may be local and customary in any given jurisdiction.

[83] *See* Rule 903(c)(1)(iv). *See also infra* nn. 100–103 and accompanying text.

[84] Sales of unregistered securities into the United States by dealers during the forty days following the first date upon which the security was bona fide offered to the public would not be exempt under section 4(3) of the Securities Act [15 U.S.C. 77d(3)]. *See* 15 U.S.C. 77d(3)(A).

[85] *See* Preliminary Note 2 to Regulation S.

[86] Rule 902(n).

[87] "Inter-dealer quotation system" means any system of general circulation to brokers or dealers which regularly disseminates quotations of identified brokers or dealers, as defined in Exchange Act Rule 15c2–11(e)(2) [17 CFR 240.15c2–11(e)(2)].

[88] These markets include the U.S. stock exchanges, the National Association of Securities Dealers Automated Quotation System ("NASDAQ"), bid and asked quotations in the current "pink sheets" of the National Quotation Bureau, Inc. and PORTAL.

[89] A reference has been added to clarify that for newly formed entities with no prior fiscal year, trading since the period of incorporation should be considered for purposes of assessing U.S. market interest. Companies with no trading history for the class of equity securities being offered or in their debt, if debt is being offered, will be deemed not to have a substantial U.S. market interest.

[90] Foreign entities that have more than 50 percent of outstanding voting securities held of record by persons with U.S. addresses and that also have either (i) a majority of executive officers or directors who are U.S. citizens or residents; (ii) more than 50 percent of assets in the United States; or (iii) the business administered principally in the United States, do not qualify as foreign issuers. *See* Rule 902(f)(2).

[91] The term "held of record," as used in the definitions of "substantial U.S. market interest" and "foreign issuer," has the meaning set forth in Rule

Continued

or more U.S. persons; (B) $1 billion or more of the principal amount outstanding of its debt securities, the greater of liquidation preference or par value of its non-participating preferred stock, and the principal amount or principal balance of its asset-backed securities, in the aggregate, being held of record by U.S. persons; and (C) 20 percent or more of the principal amount outstanding of its debt securities, the greater of liquidation preference or par value of its non-participating preferred stock, and the principal amount or principal balance of its asset-backed securities, in the aggregate, being held of record by U.S. persons.[92]

Substantial U.S. market interest in warrants is measured by the level of market interest in the securities to be purchased upon exercise of the warrants.[93] Substantial U.S. market interest in non-participating preferred stock and asset-backed securities is measured by use of the debt securities test in the definition.[94]

Foreign issuers with no "substantial U.S. market interest" are eligible to rely on the first category of the issuer safe harbor, whether or not they are reporting under the Exchange Act, have securities listed on a U.S. exchange or quoted on NASDAQ, or sponsor an American depositary receipt ("ADR") facility.

Commenters on the Reproposing Release also raised questions regarding the responsibility of the parties involved in a distribution for determining whether substantial U.S. market interest exists in the issuer's securities. Absent knowledge to the contrary, distributors may rely upon the written advice of the issuer that it has a reasonable belief that no substantial U.S. market interest exists in its securities.

(2) *"Overseas directed offerings".* In the reproposal, "overseas domestic offerings" were limited to offerings by a foreign issuer directed to its home market. The Regulation as adopted expands the concept to "overseas directed offerings" [95] in response to comments that such offerings do not have significantly more potential for flowback into the United States than the overseas domestic offerings included in the reproposal. "Overseas directed offering" includes two classes of securities offerings. The first class involves offerings of securities of foreign issuers directed to residents of a single country other than the United States made in accordance with local laws, and customary practices and documentation of that country.[96] The second class involves offerings of non-convertible debt securities, asset backed securities and non-participating preferred stock of domestic issuers [97] directed to residents of a single foreign country in accordance with local laws, and customary practices and documentation of that country, provided that the principal and interest of the securities are denominated in a currency other than U.S. dollars and the securities are neither convertible into U.S. dollar-denominated securities nor linked to U.S. dollars in a manner that has the effect of converting the securities into U.S. dollar-denominated securities. Related currency or interest rate swap transactions that are commercial in nature will not cause securities denominated in a currency other than the U.S. dollar to be treated as if they were denominated in U.S. dollars.[98]

Of particular importance in the concept of "overseas directed offering" is the requirement that such offerings be "directed" at a single country. Where the foreign issuer, a distributor, any of their respective affiliates, or a person acting on behalf of any of the foregoing, knows or is reckless in not knowing that a substantial portion of the offering will be sold or resold outside that country, the offering will not qualify as an overseas directed offering.[99]

(3) *Employee Benefit Plans.* Offerings of securities to employees of a domestic or foreign issuer or its affiliates pursuant to an employee benefit plan established and administered in accordance with laws of a foreign country and customary practices and documentation of such country may be made under the first issuer safe harbor category, provided certain other conditions are met.[100] The other conditions are: (i) The securities are issued in compensatory circumstances for bona fide services which are rendered to the issuer or its affiliates in connection with their businesses and which are not rendered in connection with the offer and sale of securities in a capital-raising transaction;[101] (ii) the interests in the benefit plan are not transferable other than by will or the laws of descent or distribution; (iii) the issuer takes reasonable steps to preclude the offer and sale of interests in the benefit plan or securities under the benefit plan to U.S. residents other than employees on temporary assignment in the United States; and (iv) documentation used in connection with any offer pursuant to the plan contains a statement that the securities have not been registered under the Act and may not be offered or sold in the United States unless registered or an exemption from registration is available.[102]

The term "employee" as used in the Regulation includes consultants or advisors, provided bona fide services are rendered by such persons to the issuer or its affiliates in connection with their businesses and such services are not rendered in connection with the offer or sale of securities in a capital-raising transaction.[103] Further, satisfaction by the issuer of the offshore transaction requirement will not be deemed precluded by a plan trustee's open market purchases in the United States for purposes of obtaining the securities to be offered and sold to employees pursuant to such an employee benefit plan in reliance on the issuer safe harbor.

b. *Category 2: Reporting issuers; non-reporting foreign issuers' debt securities; non-reporting foreign issuers' non-participating preferred stock and asset-backed securities.* Securities of all domestic issuers that file reports under the Exchange Act are subject, under the second safe harbor category,[104] both to

12g5–1 of the Exchange Act [17 CFR 240.12g5–1]. *See* Rule 902(g). Securities held of record include those known to be held through voting trusts, deposit agreements or similar arrangements.

[92] The 20 percent test has been included to address the concern of commenters that any dollar figure chosen would be too low for larger issuers. The definition of substantial U.S. market interest for debt excludes debt securities exempt under section 3(a)(3) of the Securities Act [15 U.S.C. 77c(a)(3)]. *See* Rule 902(n)(3).

[93] *See* Rule 903(c)(1)(i)(C). *See supra* n. 77 and accompanying text regarding treatment of convertible securities in connection with a determination of the level of U.S. market interest.

[94] *See* Rule 903(c)(1)(i)(B), 903(c)(4). *See also infra* nn. 106–108 and accompanying text.

[95] Rule 902(j). *See* Rule 903(c)(1)(ii).

[96] Rule 902(j)(1).

[97] "Domestic issuer" is defined in Rule 902(d). *See supra* nn. 91–92 and accompanying text for a discussion of asset-backed securities and non-participating preferred stock.

[98] Rule 902(j)(2).

[99] *See also* Preliminary Note 2 of the Regulation.

[100] *See* Rule 903(c)(1)(iv).

[101] Employee benefit plans for purposes of Rule 701 under the Securities Act [17 CFR 230.701] and Form S–8 [*see* Securities Act Release No. 6836 (June 12, 1989) (54 FR 25936)] are the types of plans intended to be covered by this condition.

[102] These conditions are similar to those included in no-action letters relating to Release 4708 and employee benefit plans. *See, e.g., Northern Telecom Limited* (Mar. 2, 1987); *Air Products and Chemicals, Inc./Air Products Ltd.* (May 16, 1985).

[103] Also in response to commenters' concerns, the Regulation provides that an employee benefit plan established and administered in accordance with the law of a foreign country and the customary practices and documentation of such country will not be deemed a U.S. person, even if the plan has a U.S. trustee or administrator. *See* Rule 902 (*o*)(5).

[104] Rule 903(c)(2).

the general conditions that an offer or sale be an offshore transaction and that no directed selling efforts may be made in the United States, and to specified selling restrictions. Securities of foreign reporting issuers [105] with substantial U.S. market interest are subject to the same restrictions. The selling restrictions applicable to the second category are designed to protect against an indirect unregistered public offering in the United States during the period the market is most likely to be affected by selling efforts offshore. In the event flowback of reporting issuers' securities does occur after the restricted period, the information relating to such securities publicly available under the Exchange Act generally should be sufficient to ensure investor protection.

The second category also applies to offerings of debt securities of any non-reporting foreign issuer. The inclusion of those offerings in this category reflects the view that offering restrictions applicable to the category provide adequate protection against an indirect U.S. distribution because of the generally institutional nature of the debt market and the trading characteristics of debt securities. Moreover, because debt securities are usually issued in separate classes or series, debt securities can be tracked more easily to detect use of offshore transactions to evade the registration obligation for distributions into the United States.

Reflecting public comment, certain equity securities of nonreporting foreign issuers have been moved to this category from the more restrictive third issuer safe harbor category because of the similarity of the market for these securities to the debt market. Non-participating preferred stock [106] and asset-backed securities [107] of non-reporting foreign issuers are now included in the second category.[108]

Two types of selling restrictions exist for securities in the second category—"transactional restrictions" and "offering restrictions."

(1) *Transactional restrictions.*[109] Transactional restrictions require that the securities sold under the safe harbor prior to the expiration of a 40-day restricted period [110] not be offered or sold to or for the benefit or account of a U.S. person.[111] Persons relying on the second issuer safe harbor category are required to ensure (by whatever means they choose) that any non-distributor to whom they sell securities is a non-U.S. person and is not purchasing for the account or benefit of a U.S. person.[112] Transactional restrictions also require a distributor selling securities to certain securities professionals to send a confirmation or notice to such purchasers advising that the purchaser is subject to the same restrictions on offers and sales that apply to a distributor.[113]

(a) *U.S. person.* Rule 902(*o*) contains a definition of the term "U.S. person." Unlike no-action letters pursuant to Release 4708, U.S. residency rather than U.S. citizenship is the principal factor in the test of a natural person's status as a U.S. person under Regulation S.[114] Thus, for example, a French citizen resident in the United States is a U.S. person.[115]

Trusts and estates generally are U.S. persons for purposes of the Regulation if any trustee, executor or administrator is a U.S. person. In response to commenters' concerns with respect to the competitive effects on U.S. professional fiduciaries, the definition of U.S. person has been revised so that an estate with a U.S. professional fiduciary acting as executor or administrator is not deemed a U.S. person if: an executor or administrator who is not a U.S. person has sole or shared investment discretion with respect to the estate assets, and the estate is governed by foreign law. An exclusion from the definition of U.S. person is provided for a trust with a U.S. professional fiduciary acting as trustee, provided a trustee who is not a U.S. person has sole or shared investment discretion with respect to the trust assets, and no beneficiary (and no settlor if the trust is revocable) is a U.S. person.

With respect to forms of business organization, such as corporations and partnerships, the definition codifies and elaborates on positions set forth in no-action letters. With regard to such entities, the place of incorporation or organization generally controls.[116] The status of subsidiaries and affiliated companies, which generally have separate legal identities, is determined according to the place of incorporation or organization. An entity organized under foreign law by a U.S. person principally for the purpose of investing in unregistered securities is a U.S. person unless organized and owned by accredited investors (as defined in Regulation D) who are not natural persons, estates or trusts.

A branch or agency of a foreign entity is treated as a U.S. person if it is located in the United States. Branches and agencies of U.S. banks and insurance companies located outside the United States are not treated as U.S. persons, if they: (i) Operate for valid business reasons; (ii) are engaged in the banking or insurance business; and (iii) are subject to substantive local banking or insurance regulation.[117]

With respect to fiduciary accounts (other than trusts and estates), the definition generally treats the person with the investment discretion as the buyer; therefore the status of that person governs. Thus, where a U.S. person has discretion to make investment decisions for the account of a non-U.S. person, the account is treated as a U.S. person.

---

[105] "Reporting issuer" is defined in Rule 902 (*l*). Issuers furnishing material to the Commission pursuant to Rule 12g3–2(b) of the Exchange Act [17 CFR 240.12g3–2(b)] are not reporting issuers.

[106] Rule 903(c)(4)(i). Convertible non-participating preferred stock will be subject to the same restrictions as equity unless it cannot be converted prior to the end of any restricted period that would be applicable to equity of the foreign issuer, in which case it would be treated as non-convertible non-participating preferred stock.

[107] Pass-through asset-backed securities and other asset-backed securities are treated the same under the safe harbor. Such pass-through securities have not been treated the same as debt securities for certain other purposes under the federal securities laws, while other asset-backed securities have been treated the same as debt.

[108] Rule 903(c)(4)(ii). Regulation S would not exempt a foreign issuer of asset-backed securities from the prohibitions of section 7(d) of the 1940 Act to the extent such foreign issuer is an investment company. *See Touche Remnant* (pub. avail. Aug. 27, 1984) and Securities Act Release No. 6862 (April 23, 1990) (text accompanying nn. 63–64).

[109] Non-compliance with the transactional restrictions precludes reliance on the safe harbor by the person who failed to meet the requirement, its affiliates and persons acting on their behalf. Such non-compliance does not affect the availability of the safe harbor for other persons. *See infra* n. 143 and accompanying text.

[110] Upon expiration of any restricted period, securities (other than unsold allotments) will be viewed as unrestricted.

[111] Rule 903(c)(2)(iii). "U.S. person" is defined in Rule 902(*o*). Offers and sales of securities to U.S. persons who are distributors are permitted; it is not the Commission's intent to prevent U.S. persons from participating in an offshore offering as distributors.

[112] Safe harbor protection would not be available where offers and sales were made nominally to non-U.S. persons to evade the restrictions.

[113] Rule 903(c)(2)(iv). Securities professionals receiving such a confirmation who are not distributors will not thereby be required to deliver confirmations or to comply with the offering restrictions.

[114] *E.g., Executive Management, Inc.* (Oct. 28, 1983).

[115] While transient visitors not resident in the United States are not U.S. persons, offers and sales to transients in the United States are transactions in the United States and may not be part of an offering relying on the safe harbors of Regulation S. *But see supra* n. 102 and accompanying text.

[116] *See, e.g., Goldman, Sachs & Co.* (Oct. 3, 1985).

[117] *See Foreign Agencies and Branches of United States Banks and Insurance Companies* (Feb. 25, 1988).

Conversely, where a non-U.S. person makes investment decisions for the account of a U.S. person, that account is not treated as a U.S. person. Several exceptions from that general principle, however, are established in the definition.

In light of the serious competitive disadvantages that might be faced by U.S. professional fiduciaries, the Commission is excepting from the definition of U.S. person U.S. professional fiduciaries acting with discretion for the accounts of persons (other than trusts and estates) who are not themselves U.S. persons.[118] Consistent with the *Baer Securities Corporation* letter,[119] U.S. professional fiduciaries acting with investment discretion are deemed U.S. persons for purposes of Regulation S only when they are acting for the account of U.S. persons.

Certain multinational organizations and their agencies, affiliates and pension plans are specifically excluded from the definition of "U.S. person." The definition also excludes all similar multinational entities.[120] The staff interpretive letter process will be available for future questions regarding exclusion of specific multinational organizations.

The reproposal would not have permitted offers and sales to such professional fiduciaries and multinational entities to be made inside the United States. Numerous commenters objected to the fact that, contrary to the *Baer* letter, sales to such persons would have to comply with the offshore transaction requirement and the restriction against directed selling efforts in the United States. In response to those comments, the definition of "directed selling efforts" has been revised to exclude contacts with U.S. professional fiduciaries acting with investment discretion for the accounts of non-U.S. persons, in their capacities as such, and with multinational organizations excluded from the definition of U.S. person.[121] Offers and sales to such persons also are deemed to be made in offshore transactions.[122] Nevertheless, if a U.S. professional fiduciary were offered and sold securities for accounts of non-U.S. persons in reliance upon the safe harbor but placed such securities in accounts held for the benefit of U.S. persons, that fiduciary could be deemed an underwriter for purposes of the Securities Act and may have distributed unregistered securities in violation of section 5.

(b) *Measurement of the restricted period.* The 40-day restricted period begins to run on the later of the date of the closing of the offering or the date the first offer of the securities to persons other than distributors is made.[123]

In the case of a continuous offering, the Commission originally proposed that the restricted period would not commence until completion of the distribution, as determined and certified by the lead managing underwriter. Other than as discussed below, this position has been retained.

The reproposal provided that in the case of offerings of non-convertible debt securities issued in clearly distinct and identifiable tranches or issues, the 40-day restricted period would commence upon completion of the distribution of that tranche or issue, as certified by the lead managing underwriter or person performing similar functions. Public comments on the reproposal objected that a further requirement, suggested in the text of the release, that 40 days would have to pass from the sale of the tranche to the sale of another identifiable tranche, would effectively foreclose reliance on Regulation S for the conduct of medium-term note ("MTN") programs [124] outside the United States. In such programs, sales of identifiable tranches may not be separated by 40 days from the sale of another such tranche. Recognizing the legitimacy of this offering technique, the Commission agrees that the commencement of a restricted period should not be delayed because of the coincidence of two independent sales in such a continuous offering within a period of 40 days. As adopted, the Regulation provides that in such continuous debt offerings, the restricted period will run from the managing underwriter's certification that the distribution of an identifiable tranche of securities has been completed. Under this method, the Commission believes that continuous offerings, including MTN programs, could be conducted in accordance with Regulation S.

Commenters on the Reproposing Release also expressed concern that warrants offered pursuant to the second or third issuer safe harbor categories could never be offered or sold to U.S. persons absent registration or an available exemption from registration.[125] To address those concerns, the Regulation as adopted provides that the restricted period of the underlying securities will coincide with the restricted period for the warrants if certain procedures are followed to ensure that the underlying securities are not sold to U.S. persons except in a registered or exempt transaction.[126] The required procedures are threefold. First, the warrants must contain a legend stating that they and the underlying securities have not been registered under the Securities Act, and that the warrants may not be exercised by or on behalf of U.S. persons unless registered or an exemption from registration is available.[127] Second, the person exercising the warrant must be required either to certify that it is not a U.S. person and that the warrants are not being exercised on behalf of a U.S. person, or to provide an opinion of counsel that the securities have been registered or that an exemption from registration is available. Finally, procedures must be adopted to ensure that the warrants may not be exercised in the United States and the underlying securities may not be delivered to the United States,[128] absent registration or an available exemption from registration.

(c) *ADRs and the restricted period.* No substantive changes have been made from the reproposal with respect to ADRs. Like the reproposal, the Regulation as adopted focuses on the sale by a depositary of ADRs

---

[118] *See* Rule 902(*o*)(2).

[119] *Baer Securities Corporation* (Oct. 12, 1979).

[120] Rule 902(*o*)(7).

[121] Rule 902(b)(3).

[122] Rule 902(i)(3).

[123] *See* Rule 902(m).

[124] "Medium-term note" programs are one technique for the continuous offering of debt securities. The reference to "medium term" has no necessary relation to the maturity or other commercial terms of the securities sold. Instead a medium-term note program is a facility allowing the issuance of debt securities of varying maturities as dictated by market demand and other financial considerations. *See* Slonaker and Wiltshire, *Innovative Debt Securities*, 20 Rev. Sec. & Comm. Reg. 89, 91–93 (1987).

[125] The Commission noted in the Proposing Release that warrants could be issued in reliance on the Regulation, but so long as the warrants were exercisable, a continuous offering of the underlying securities would be ongoing, and thus the warrants would be subject to the restricted period of the underlying securities, which would not begin to run until the warrants were no longer exercisable because certification that the distribution of the underlying securities had ended could not be given until then. *See* 53 FR at 22668, n.93 and accompanying text.

[126] The procedures are similar to those described to the Division of Corporation Finance in the *Sears Overseas Finance N.V.* (June 11, 1982) no-action letter.

[127] When no physical instrument is delivered to represent the warrants, another procedure, such as delivery of a notice, must be used to inform the recipient of the information that otherwise would be contained in the legend.

[128] Certain U.S. professional fiduciaries and multinational organizations excluded from the definition of U.S. person (*see* Rule 902(*o*) (2) and (7)) may exercise such warrants and receive such warrants in the United States notwithstanding this requirement. *See* Rule 902(m)(3). *See also* Rule 902(i)(3).

representing securities of the class distributed. Such sales are permitted if (1) the ADRs represent securities acquired by the depositary prior to the distribution, or (2) the depositary determines by examination of the certificate or other evidence that the security to be deposited is not subject to a restricted period and was neither borrowed nor deposited with the intention that it be replaced with securities subject to the restricted period. Whether any sales may be made prior to the expiration of a restricted period depends in part on what steps the issuer of deposited securities is willing or able to take to identify the securities it is distributing. Issuance of ADRs in exchange for underlying securities and withdrawal of deposited securities by ADR holders is not precluded by the safe harbor provisions.

A single method of identifying the securities in question is not specified because a particular method may not be consistent with applicable rules in all countries. Examples of possible methods of identifying newly distributed securities include the underlining of dates, the use of different colors for the certificates, the use of legends, the use of identified certificate numbers, and the coding of securities by the transfer agent.

(d) *Confirmations.* Until the expiration of the restricted period, another condition of the second issuer safe harbor category is that a distributor selling securities to a distributor, dealer, or person receiving remuneration with respect to the securities, prior to the expiration of the restricted period, send a confirmation or other notice stating that the purchaser is subject to the same restrictions on offers and sales as the distributor.[129] As in the Reproposing Release, the confirmation need only note the applicable restrictions, rather than seek to create a binding agreement to abide by the restrictions. The Regulation is conditioned on transmission, rather than receipt or delivery of the confirmation, to facilitate distributors' compliance burden.

In light of the movement towards paperless markets, the phrase "confirmation or other notice," accommodates paperless transactions. The "other notice" could include a notice given on screen rather than on paper or a notice given on the telephone, provided that the seller kept written records of notices given. In response to commenters' concerns, the Commission has determined that screen notices may be given in summary form, provided all subscribers to the screen-based system are sent, prior to first use and periodically thereafter, a key that indicates what each summary notice represents and includes the full text of each notice.

(2) *Offering restrictions.* "Offering restrictions" are procedures that must be adopted with regard to the entire offering by the issuer, distributors, their respective affiliates, and all persons acting on behalf of any of the foregoing, in order for a transaction to be in compliance with the second or third categories of the issuer safe harbor. Failure to implement the offering restrictions precludes the availability of the issuer safe harbor for all parties.[130] In effect, offering restrictions are procedures set up by such persons to ensure compliance with the transactional restrictions, particularly the restrictions on offer or sale of the securities to or for the account or benefit of U.S. persons. When the issuer, a distributor, an affiliate of either, or a person acting on behalf of any of the foregoing, is the seller of securities, that person is in a position to ensure, and should ensure, that procedures designed to discourage flowback are used with respect to the entire offering.

The offering restrictions, which are the same for both the second and third issuer safe harbor categories, have been modified from those developed in no-action letters under Release 4708. The offering restrictions require distributors, who by definition are participating in the distribution pursuant to a contractual arrangement, to contract that all their offers and sales of the securities will be made in accordance with the safe harbor (or pursuant to registration under the Securities Act or an exemption therefrom).[131]

The issuer, distributors, their respective affiliates, and persons acting on behalf of any of the foregoing, must ensure that certain materials disclose that the securities have not been registered and may not be offered or sold in the United States or to a U.S. person (other than a distributor), unless registered or an exemption from registration is available. Disclosure of the restrictions must appear in any prospectus, offering circular or other document (other than a press release) used in connection with the distribution prior to the expiration of the restricted period. All advertisements relating to the securities are subject to that requirement. The disclosure may appear in summary form on prospectus cover pages and in advertisements.[132]

c. *Category 3: Non-reporting U.S. issuers; equity offerings by non-reporting foreign issuers with substantial U.S. market interest.* All securities not covered by the prior two categories fall into this residual category, which is subject to procedures intended to protect against an unregistered U.S. distribution where there is little (if any) information available to the marketplace about the issuer and its securities and there is a significant likelihood of flowback. This category includes securities of non-reporting U.S. issuers and equity securities of non-reporting foreign issuers with substantial U.S. market interest in their equity securities.

As in the case of securities of reporting issuers, offerings of securities in this category are subject to the two general conditions and to offering and transactional restrictions. Offering restrictions that must be adopted for offerings of these securities are the same as for offerings of securities of reporting issuers. In contrast to offerings in the second category, more restrictive transactional restrictions to prevent flowback are applicable.

In essence, the restrictive procedures are similar to those that evolved under the no-action letters involving Release 4708. The procedures adopted are essentially those included in the Reproposing Release. These distinguish between debt and equity securities, recognizing that debt securities are generally sold in institutional markets and that the likelihood of flowback is less than in the case of common equity. The category includes a restricted period of one year for equity securities and forty days for debt securities. Two types of a non-reporting U.S. issuers' securities, which would include non-convertible, nonparticipating preferred stock and asset-backed securities, will be subject to the same restrictions as debt securities in the third category, including a 40-day restricted period rather than a one-year restricted period. Offerings of securities of a non-reporting foreign issuer of those two types have been added to the second issuer safe harbor category.[133]

Offerings of equity securities in this category are subject to restrictions similar to those afforded no-action treatment in *InfraRed Associates, Inc.*[134] Prior to the expiration of the one-

[129] The same confirmation delivery requirement is included in the third issuer safe harbor category. *See* Rule 903 (c)(2)(iv) and (c)(3)(iv). *See supra* n. 113.

[130] *See infra* n. 142 and accompanying text.

[131] Rule 902(h)(1).

[132] Rule 902(h)(2).

[133] *See* Rule 903(c)(4). *See also supra* nn. 106–108 and accompanying text.

[134] *InfraRed Associates, Inc., supra* n. 16.

year restricted period, the securities may not be sold to U.S. persons or for the account or benefit of U.S. persons (other than distributors). Purchasers of the securities (other than distributors) are required to certify that they are not U.S. persons and are not acquiring the securities for the account or benefit of a U.S. person other than persons who purchased securities in transactions exempt from the registration requirements of the Securities Act.[135] Such purchasers are also required to agree only to sell the securities in accordance with the registration provisions of the Securities Act or an exemption therefrom, or in accordance with the provisions of the Regulation.

With respect to equity securities of domestic issuers, the safe harbor requires that a legend be placed on the shares stating that transfer is prohibited other than in accordance with the Regulation. The safe harbor further requires that any issuer, by contract or a provision in its bylaws, articles, charter or comparable document, refuse to register any transfer of equity securities not made in accordance with the provisions of the Regulation. Where bearer securities are being sold, or foreign law prevents an issuer from refusing to register securities transfers, use of reasonable procedures, such as a legend, will suffice to satisfy the requirement designed to prevent transfer of equity securities other than in accordance with the Regulation.

Purchasers of debt securities offered under the third issuer safe harbor category (other than distributors) are subject to different restrictions than equity purchasers under this category. Prior to the expiration of the forty-day restricted period, the securities may not be sold to U.S. persons or for the account or benefit of U.S. persons (other than distributors). The debt securities must be represented by temporary global securities not exchangeable for definitive securities until expiration of the restricted period. Upon expiration, persons exchanging their temporary global security for the definitive security are required to certify beneficial ownership by: a non-U.S. person or a U.S. person who purchased securities in a transaction that did not require registration under the Securities Act.[136]

Distributors selling equity or debt securities prior to the expiration of the restricted period are required to send a confirmation or other notice to purchasers who are distributors, dealers or persons receiving remuneration in connection with the sale. The notice must state that the purchaser is subject to the same restrictions on offers and sales as the distributor. Non-distributors are not required to send such a confirmation or notice.

3. Resale safe harbor

Under the reproposal, the resale safe harbor was available for offers and sales by all persons other than an issuer, a distributor, their respective affiliates, and any person acting on behalf of any of the foregoing.[137] As suggested by several commenters, the Regulation as adopted also specifically allows certain officers and directors of issuers and distributors to rely upon the resale safe harbor. Officers and directors of such persons who are affiliates would otherwise be unable to rely upon the resale safe harbor. As adopted, an officer or director of an issuer or distributor is eligible to rely upon the resale safe harbor if the sole reason such officer or director may be deemed an affiliate is by virtue of position, provided no special selling compensation is paid in connection with the offers and sales by such officer or director and the general conditions (and conditions imposed upon dealers and certain securities professionals, as applicable) are satisfied. Special selling compensation includes any selling concession, fee or other remuneration, other than the usual and customary broker's commissions that would be received by persons executing such sales as agents.[138] Of course, where such officer or director is being used as a conduit to offer and sell securities in reliance on the resale safe harbor by persons ineligible to rely thereon, the resale safe harbor will not be available.[139]

Persons other than: (1) Dealers and persons receiving a selling concession, fee or other remuneration in respect of the securities offered or sold, which may include sub-underwriters (all referred to herein as "securities professionals"), and (2) affiliated officers and directors eligible to rely upon the resale safe harbor, may resell any securities in reliance on this safe harbor, with no restrictions other than the general conditions that the offer and sale be made in an offshore transaction (including offers and sales in a designated offshore securities market not pre-arranged with a buyer in the United States) and without directed selling efforts within the United States.

Resales by securities professionals also are subject to the offshore transaction requirement and the prohibition on directed selling efforts (and the conditions applying to affiliated officers and directors, as applicable). In addition, if the securities being resold are not in the first issuer safe harbor category and the resale is made prior to the expiration of any applicable restricted period, neither the securities professional nor any person acting on its behalf may knowingly offer or sell to a U.S. person.[140] Further, if the selling securities professional or a person acting on its behalf knows the purchaser of the securities is a securities professional, the seller is required to send a confirmation or other notice of the applicable restrictions to the purchaser.[141]

The resale safe harbor is available for the resale offshore of any securities, whether or not acquired in an offshore transaction under Regulation S. Resales pursuant to Rule 904 of securities originally placed privately will not affect the validity of the private placement exemption relied upon by the issuer.

4. Safe harbor protections

If an issuer, distributor, any of their respective affiliates (other than officers and directors relying on the resale safe harbor), or any person acting on behalf of any of the foregoing: (1) Fails to comply with the offering restrictions; or (2) engages in a directed selling effort in the United States, the Rule 903 safe harbor is unavailable to any person in connection with the offering of securities.[142] If the issuer, a distributor, any of such respective affiliates, or any person acting on behalf of any of the foregoing, fails to comply with any other

[135] Such a certification could be made, for example, by a qualified institutional buyer who purchased in accordance with Rule 144A.

[136] Certification as to beneficial ownership made by a financial institution or clearing organization through which the beneficial owner holds the securities will suffice for purposes of this safe harbor.

[137] Rule 904. Several commenters on the reproposed Regulation stated that the resale safe harbor might be interpreted as somehow altering the availability of Sections 4(1) and 4(3) of the Securities Act [15 U.S.C. 77d(1), 77d(3)] for the resale of securities. The Regulation does not affect the availability of the exemptions contained in those sections.

[138] *See* Rule 904(c)(2).

[139] Thus, securities being offered in a distribution by the issuer could not be resold under Rule 904 by an officer or director during the distribution or during any applicable restricted period.

[140] The safe harbor does not place a duty of inquiry on the securities professional.

[141] Paralleling the issuer safe harbor, the confirmation requirement in the resale safe harbor requires transmission rather than receipt or delivery.

[142] Resales by officers and directors in compliance with Rule 904 will not affect the availability of Rule 903.

requirement of the issuer safe harbor,[143] the safe harbor is not available for any offer or sale in reliance thereon made by the person failing to comply, its affiliates or persons acting on their behalf. The availability of Rule 903 for other persons' offers and sales of securities is unaffected.

Under the reproposal, the failure to comply with the conditions, other than the offering restrictions and the restrictions on directed selling efforts in the United States, would have precluded reliance upon the safe harbor only for non-complying offers and sales. Under Rule 903 as adopted, reliance upon the safe harbor for all offers and sales made by a non-complying person and its affiliates is precluded as an appropriate incentive to comply fully with the conditions of the safe harbor.

The availability of the Rule 904 resale safe harbor generally is unaffected by the actions of the issuer, distributor, their respective affiliates (other than certain officers and directors relying upon Rule 904), or persons acting on behalf of any of the foregoing. An offer or sale of securities made in compliance with the provisions of Rule 904 is within the safe harbor, notwithstanding non-complying offers or resales by other unaffiliated persons not acting on behalf of the seller.[144]

As Preliminary Note 2 states, the Regulation is not available to any transaction or series of transactions that, although in technical compliance with the rules, is part of a plan or scheme to evade the registration provisions of the Securities Act. Thus, for example, a participant in a distribution, regardless of whether it literally takes all steps required for reliance upon the protection of the Regulation, does not have the protection of the Regulation if it knows or is reckless in not knowing that a person to whom it sells securities in reliance upon the Regulation will not comply with the requirements. Clearly, if an underwriter were told by a dealer to whom it intended to sell securities in reliance upon Rule 903 that the dealer had a customer in New York waiting for the securities, that underwriter would not be able to rely upon the protection of the Rule in connection with its sale to that dealer, even if the underwriter complied with all the Regulation's requirements. The same would be true if the underwriter knew or was reckless in not knowing that the dealer to whom it intended to sell had consistently sold to U.S. residents in violation of resale restrictions in other offerings made pursuant to the safe harbor provisions of the Regulation. If, on the other hand, an underwriter sold to a dealer and the dealer sold to a customer in the United States, and the underwriter did not know and was not reckless in failing to know that the non-conforming sale would occur, the underwriter would not lose the protection of the safe harbor.

C. Interaction With Other Securities Act Provisions

1. Contemporaneous U.S. and Offshore Offerings

Offshore transactions made in compliance with Regulation S will not be integrated with registered domestic offerings or domestic offerings that satisfy the requirements for an exemption from registration under the Securities Act, even if undertaken contemporaneously. Resales of securities offered and sold in offshore transactions pursuant to Rule 144A are consistent with Rule 904. Of course, the securities sold pursuant to Rule 144A would be restricted securities.

2. Revisions to Rules

References to Release 4708 in certain rules under the Securities Act are being revised to make reference to Regulation S. Preliminary Note 7 to Regulation D [145] stated: "Offers and sales of securities to foreign persons made outside the United States effected in a manner that will result in the securities coming to rest abroad generally need not be registered." A reference to Release 4708 and a discussion of its interaction with Regulation D followed that statement. That Preliminary Note is being amended to delete the reference to Release 4708, refer to this Release and affirm the principle that the Regulation may be relied upon for such offers and sales even if coincident offers and sales are made in accordance with Regulation D inside the United States.

The Note to Rule 502(a) of Regulation D [146] states that transactions meeting the requirements of an exemption generally will not be integrated with simultaneous offerings being made outside the United States in a manner that the securities come to rest abroad. That statement was followed by a reference to Release 4708. The discussion of the non-integration policy and the reference to Release 4708 are being replaced by discussion of and references to Regulation S.

D. Interaction With Trust Indenture Act

The Trust Indenture Act of 1939 ("Trust Indenture Act") [147] applies generally to the offer and sale of debt securities if the means or instruments of interstate commerce or the mails are used. In such cases, the securities must be issued under an indenture which conforms to the requirements of and has been qualified under the Trust Indenture Act, unless an exemption is available.[148]

The staff has granted numerous no-action letters involving offers and sales of securities otherwise than under a qualified indenture, where the securities involved were being offered and sold in reliance upon Release 4708.[149] The Commission is continuing this position with respect to offers and sales of securities made under the safe harbor provisions of Rules 903 and 904 in Regulation S. Specifically, the Commission will not take any enforcement action under the Trust Indenture Act where an offer and sale of securities is made otherwise than under a qualified indenture, if the offer and sale are made in compliance with Rule 903 or 904.[150]

E. Interaction With Investment Company Act

Consistent with the proposals, the Regulation is available for offers and sales of securities of any investment company that is not registered or required to register under the 1940 Act.[151] As originally proposed, the

---

[143] The confirmation requirement is included in the transactional restrictions, rather than the offering restrictions, in response to commenters' concern that otherwise the failure to provide a simple confirmation would make the issuer safe harbor unavailable for the entire offering.

[144] Affiliates of the seller (other than the issuer or a distributor, in the case of an officer or director thereof selling in reliance on the resale safe harbor) will be deemed to be acting on behalf of the seller.

[145] Preliminary Note 7 to 17 CFR 230.501–230.508.

[146] Note to 17 CFR 230.502(a).

[147] 15 U.S.C. 77aaa–bbbb.

[148] Section 304(a)(6) of the Trust Indenture Act [15 U.S.C. 77ddd(a)(6)] contains an exemption for certain securities issued or guaranteed by a foreign government or a subdivision, department, municipality, agency or instrumentality thereof. Section 304(d) [15 U.S.C. 77ddd(d)], authorizes the Commission, on application by an issuer and after opportunity for a hearing, to exempt by order any security of a person organized under the laws of a foreign government or political subdivision thereof, if certain conditions are met.

[149] *E.g., goldman, Sachs & Co.* (Oct. 3, 1985).

[150] The Commission has submitted a proposal to Congress which, if enacted, would comprehensively modernize the Trust Indenture Act. Under the proposal, the Commission's exemptive power under section 304(d) would be broadened to permit adjustment of the Act's requirements to particular needs when their application would impose undue restrictions, and would thus allow for formalization of the positions taken in the Commission's no-action letters.

[151] A U.S. investment company that, using any means of interstate commerce, sold its shares to foreigners generally would be required to register under the 1940 Act. *See* section 7 of the 1940 Act, 15 U.S.C. 80a–7.

Regulation was not applicable to offers and sales of securities issued by investment companies registered or required to register under the 1940 Act. In the Proposing Release, the Commission set forth several reasons for drawing a distinction between investment company and other securities, but solicited comment as to whether the Regulation should be revised to allow its use for offers and sales of investment company securities.[152]

Several commenters expressed the view that Regulation S should be extended to offers and sales of securities issued by registered closed-end investment companies ("closed-end funds"). They stated that the Commission's concern regarding redemptions is not applicable to offerings by closed-end funds, which do not issue redeemable securities; that closed-end fund offerings have more in common with offerings of industrial issuers than offerings of mutual funds; that the substantive rules under the Securities Act governing the registration of offerings by closed-end funds should be similar to those governing industrial company offerings; and that offering documents for offshore sales would contain adequate disclosures due to the applicability of the antifraud provisions of the Securities Act.

As adopted, the Regulation is available with respect to offers and sales of securities issued by closed-end funds registered under the 1940 Act. Because such investment companies do not file reports under the Exchange Act, offerings of their securities generally will fall into the third category for purposes of the issuer safe harbor.[153] In addition, the Commission requests comment as to whether to extend the application of the Regulation to offers and sales of securities issued by registered mutual funds and unit investment trusts ("UIT"). Comment is requested with respect to whether the concerns outlined in Release 5068 and the Proposing Release continue to be significant in connection with offerings of such mutual fund and UIT securities and, if so, how they can be addressed. Because mutual funds and UITs issue redeemable securities, the concern addressed in Release 5068 regarding redemptions appears to be valid. Could the concern about redemptions be addressed adequately by relying on the antifraud provisions of the Securities Act and any disclosure requirements of the foreign country in which the securities are sold? Would application of the Regulation meet the legitimate expectations of investors and foreign regulators when U.S. mutual funds are offered and sold abroad? Comment is also specifically requested regarding whether the restrictions and procedures required by the third category of the issuer safe harbor of the Regulation are appropriate for offers and sales of investment company securities, or whether additional, fewer or different restrictions and procedures are warranted. For example, should offering documents be required to include: a description of the substantive requirements of the 1940 Act; a description of the ways in which the redemption procedures of mutual funds and UITs differ from those of similar investment vehicles subject to regulation in the country where the offer is made; and risk factor disclosure? Also, should delivery of a disclosure document be required in connection with foreign offers and sales of such mutual fund and UIT securities even if not required in the jurisdiction where the offer and sale are made? Finally, comment is requested as to whether any rules or guidelines would be appropriate for the use of advertising and sales literature in connection with offshore offers and sales of mutual fund and UIT securities under the Regulation.

[152] The reasons set forth in the Proposing Release for making this distinction were: to ensure that prospective investors receive disclosure about matters subject to substantive regulation under the 1940 Act (which in turn would effectuate the policies of the 1940 Act); to address the expectations of investors that the activities of a U.S. investment company subject to registration and regulation under the 1940 Act would also be subject to Securities Act registration (and because investors in such investment companies, in effect, elect to invest in the U.S. capital markets); and to protect the U.S. securities markets as a whole by ensuring that foreign investors will not seek redemptions which could require the sale of portfolio securities because of a later realization that they had been inadequately informed about their investment. *See* Securities Act Release No. 6779, *supra* n. 1, at nn. 74–75 and accompanying text. Those reasons had initially been set forth in Securities Act Release No. 33–5068 (June 23, 1970) [35 FR 12103] ("Release 5068"), in which the Commission discussed the procedures to be used by open-end investment companies ("mutual funds") in connection with overseas offerings of their securities.

[153] In lieu of filing reports under sections 13 and 15(d) of the Exchange Act, investment companies file semi-annual reports on Form N–SAR. *See* Rule 30a–1 under the 1940 Act [17 CFR 270.30a–1]. Form N–SAR is not designed to provide the market with the same stream of information as the periodic reports required of non-investment companies by the Exchange Act. While investment companies are required to provide annual reports to their shareholders, there is no mechanism for assuring that the information contained in these reports is made generally known to the markets. Accordingly, offerings of securities of registered closed-end funds generally may be made only under the third issuer safe harbor category of the Regulation (Rule 903(c)(3)).

IV. Cost-Benefit Analysis

It appears to the Commission that, while it is possible that some additional costs to issuers, distributors or other sellers may result from structuring a transaction in accordance with the requirements of a safe harbor or the General Statement, such costs will be outweighed by the savings of the costs of registration and the benefit derived from assurance that registration need not be undertaken. In addition, the Commission believes that the streamlined method to assure that the securities come to rest outside the United States will also reduce costs.

V. Availability of Final Regulatory Flexibility Analysis

A Final Regulatory Flexibility Analysis in accordance with the Regulatory Flexibility Act has been prepared with respect to the Regulation and the amendments to Regulation D. A summary of a corresponding Initial Regulatory Flexibility Analysis was included in the Proposing Release, and a summary of a revised corresponding Initial Regulatory Flexibility Analysis was included in the Reproposing Release. Members of the public who wish to obtain a copy of the Final Regulatory Flexibility Analysis should contact Anita Klein, Office of International Corporate Finance, Division of Corporation Finance, U.S. Securities and Exchange Commission, 450 Fifth Street, NW., Washington, DC 20549.

VI. Summary of Initial Regulatory Flexibility Analysis

An Initial Regulatory Flexibility Analysis in accordance with 5 U.S.C. 603 has been prepared concerning the proposal to extend Regulation S to registered mutual funds and UITs. This analysis notes that the proposal is intended to provide such mutual funds and UITs with the same guidance concerning extraterritorial offerings of securities that is provided by Regulation S to other issuers.

This proposal will not result in any significant increase in reporting, recordkeeping or compliance requirements. No alternatives to this proposal consistent with its objectives were found. Small entities, like any other issuers, would be entitled to the benefits of the guidance and safe harbor provided by extension of Regulation S.

A copy of the analysis may be obtained by contacting Kenneth J. Berman, Office of Disclosure and Adviser Regulation, Division of Investment Management, U.S. Securities

and Exchange Commission, 450 Fifth Street NW., Washington, DC 20549.

VII. Paperwork Reduction

OMB Number: 3235–0357. Expires April 19, 1993. Estimated average burden hours per response—1.0.

VIII. Effective Date

Regulation S and the amendments to Regulation D shall be effective immediately upon publication in the **Federal Register**, in accordance with the Administrative Procedure Act, which allows effectiveness in less than 30 days after publication for, *inter alia*, "a substantive rule which grants or recognizes an exemption or relieves a restriction" and "interpretative rules and statements of policy." 5 U.S.C. 553(d) (1) and (2).

IX. Statutory Basis and Text Of Regulation and Regulation Amendments

This Regulation and the amendments to Regulation D are being adopted pursuant to sections 2, 3, 4, and 19 of the Securities Act of 1933.

List of Subjects

17 CFR Part 200

Administrative practice and procedure, Authority delegations, Organization and functions.

17 CFR Part 230

Reporting and recordkeeping requirements, Securities.

Text of Regulation and Regulation Amendments

In accordance with the foregoing, title 17, chapter II of the Code of Federal Regulations is amended as follows:

PART 200—ORGANIZATION; CONDUCT AND ETHICS; AND INFORMATION REQUESTS

1. The authority citation for part 200, subpart A continues to read in part as follows:

Authority: Secs. 19, 23, 48 Stat. 85, 901, as amended; sec. 20, 49 Stat. 833; sec. 319, 53 Stat. 1173; secs. 38, 211, 54 Stat. 841, 855; sec. 308, 101 Stat. 1254 (15 U.S.C. 77s, 78d–1, 78d–2, 78w, 79t, 77sss, 80a–37, 80b–11), unless otherwise noted. * * *

2. Section 200.30–1 is amended by adding new paragraph (j) as follows:

§ 200.30–1 Delegation of authority to Director of Division of Corporation Finance.

* * * * *

(j) With respect to the Securities Act of 1933 (15 U.S.C. 77a *et seq.*) and Regulation S thereunder (§ 230.901 *et seq.* of this chapter), and in consultation with the Director of the Division of Market Regulation, to designate any foreign securities exchange or non-exchange market as a "designated offshore securities market" within the meaning of Rule 902(a) (§ 230.902(a) of this chapter).

PART 230—GENERAL RULES AND REGULATIONS, SECURITIES ACT OF 1933

1. The authority citation for part 230 is amended by adding the following citations: (Citations before * * * indicate general rulemaking authority).

Authority: Sec. 19, 48 Stat 815, as amended; 15 U.S.C. 77s * * * Sections 230.901–230.904 and amendments to Regulation D also issued under Sections 2, 3 and 4, 15 U.S.C. 77b, 77c, and 77d.

* * * * *

2. By revising Preliminary Note 7 to Regulation D, §§ 230.501 through 230.508, to read as follows:

Regulation D—Rules Governing the Limited Offer and Sale of Securities Without Registration Under the Securities Act of 1933

Preliminary Notes

* * * * *

7. Securities offered and sold outside the United States in accordance with Regulation S need not be registered under the Act. See Release No. 33–6863. Regulation S may be relied upon for such offers and sales even if coincident offers and sales are made in accordance with Regulation D inside the United States. Thus, for example, persons who are offered and sold securities in accordance with Regulation S would not be counted in the calculation of the number of purchasers under Regulation D. Similarly, proceeds from such sales would not be included in the aggregate offering price. The provisions of this note, however, do not apply if the issuer elects to rely solely on Regulation D for offers or sales to persons made outside the United States.

3. By revising the Note to paragraph (a) of § 230.502 to read as follows:

§ 230.502 General conditions to be met.

* * * * *

(a) * * *

Note: The term "offering" is not defined in the Act or in Regulation D. If the issuer offers or sells securities for which the safe harbor rule in paragraph (a) of this § 230.502 is unavailable, the determination as to whether separate sales of securities are part of the same offering (i.e. are considered "integrated") depends on the particular facts and circumstances. Generally, transactions otherwise meeting the requirements of an exemption will not be integrated with simultaneous offerings being made outside the United States in compliance with Regulation S. See Release No. 33–6863.

The following factors should be considered in determining whether offers and sales should be integrated for purposes of the exemptions under Regulation D:

(a) Whether the sales are part of a single plan of financing;

(b) Whether the sales involve issuance of the same class of securities;

(c) Whether the sales have been made at or about the same time;

(d) Whether the same type of consideration is being received; and

(e) Whether the sales are made for the same general purpose.

See Release 33–4552 (November 6, 1962) [27 FR 11316].

* * * * *

4. By adding new Regulation S, consisting of Preliminary Notes and §§ 230.901–230.904, to read as follows:

Regulation S—Rules Governing Offers and Sales Made Outside the United States Without Registration Under the Securities Act of 1933

Preliminary Notes

§ 230.901. General statement.
§ 230.902. Definitions.
§ 230.903. Offers or sales of securities by the issuer, a distributor, any of their respective affiliates, or any person acting on behalf of any of the foregoing; conditions relating to specific securities.
§ 230.904. Resales.

Preliminary Notes

1. The following rules relate solely to the application of Section 5 of the Securities Act of 1933 (the "Act") [15 U.S.C. 77e] and not to antifraud or other provisions of the federal securities laws.

2. In view of the objective of these rules and the policies underlying the Act, Regulation S is not available with respect to any transaction or series of transactions that, although in technical compliance with these rules, is part of a plan or scheme to evade the registration provisions of the Act. In such cases, registration under the Act is required.

3. Nothing in these rules obviates the need for any issuer or any other person to comply with the securities registration or broker-dealer registration requirements of the Securities Exchange Act (the "Exchange Act"), whenever such requirements are applicable.

4. Nothing in these rules obviates the need to comply with any applicable state law relating to the offer and sale of securities.

5. Attempted compliance with any rule in Regulation S does not act as an exclusive election; a person making an offer or sale of securities may also claim the availability of any applicable exemption from the registration requirements of the Act.

6. Regulation S is available only for offers and sales of securities outside the United States. Securities acquired overseas, whether or not pursuant to Regulation S, may be resold in the United States only if they are registered under the Act or an exemption from registration is available.

7. Nothing in these rules precludes access by journalists for publications with a general circulation in the United States to offshore press conferences, press releases and

meetings with company press spokespersons in which an offshore offering or tender offer is discussed, provided that the information is made available to the foreign and United States press generally and is not intended to induce purchases of securities by persons in the United States or tenders of securities by United States holders in the case of exchange offers.

8. The provisions of this Regulation S shall not apply to offers and sales of securities issued by open-end investment companies or unit investment trusts registered or required to be registered or closed-end investment companies required to be registered, but not registered, under the Investment Company Act of 1940 [15 U.S.C. 80a–1 *et seq.*] (the "1940 Act").

§ 230.901 General statement.

For the purposes only of section 5 of the Act (15 U.S.C. § 77e), the terms "offer," "offer to sell," "sell," "sale," and "offer to buy" shall be deemed to include offers and sales that occur within the United States and shall be deemed not to include offers and sales that occur outside the United States.

§ 230.902 Definitions.

As used in Regulation S, the following terms shall have the meanings indicated.

(a) *Designated Offshore Securities Market.* "Designated offshore securities market" means:

(1) The Eurobond market, as regulated by the Association of International Bond Dealers; the Amsterdam Stock Exchange; the Australian Stock Exchange Limited; the Bourse de Bruxelles; the Frankfurt Stock Exchange; The Stock Exchange of Hong Kong Limited; The International Stock Exchange of the United Kingdom and the Republic of Ireland, Ltd.; the Johannesburg Stock Exchange; the Bourse de Luxembourg; the Borsa Valori di Milan; the Montreal Stock Exchange; the Bourse de Paris; the Stockholm Stock Exchange; the Tokyo Stock Exchange; the Toronto Stock Exchange; the Vancouver Stock Exchange; and the Zurich Stock Exchange; and

(2) Any foreign securities exchange or non-exchange market designated by the Commission. Attributes to be considered in determining whether to designate such a foreign securities market, among others, include:

(i) Organization under foreign law;

(ii) Association with a generally recognized community of brokers, dealers, banks, or other professional intermediaries with an established operating history;

(iii) Oversight by a governmental or self-regulatory body;

(iv) Oversight standards set by an existing body of law;

(v) Reporting of securities transactions on a regular basis to a governmental or self-regulatory body;

(vi) A system for exchange of price quotations through common communications media; and

(vii) An organized clearance and settlement system.

(b) *Directed Selling Efforts.* (1) "Directed selling efforts" means any activity undertaken for the purpose of, or that could reasonably be expected to have the effect of, conditioning the market in the United States for any of the securities being offered in reliance on this Regulation S. Such activity includes placement of an advertisement in a publication with a general circulation in the United States that refers to the offering of securities being made in reliance upon this Regulation S.

(2) Notwithstanding paragraph (b)(1) of this section, placement of an advertisement required to be published under United States or foreign law, or under rules or regulations of a United States or foreign regulatory or self-regulatory authority, shall not be deemed "directed selling efforts," provided the advertisement contains no more information than legally required and includes a statement to the effect that the securities have not been registered under the Act and may not be offered or sold in the United States (or to a U.S. person, if the advertisement relates to an offering under § 230.903(c)(2) or (3)) absent registration or an applicable exemption from the registration requirements.

(3) Notwithstanding paragraph (b)(1) of this section, contact with persons excluded from the definition of "U.S. person" pursuant to paragraph (o)(7) of this section or persons holding accounts excluded from the definition of "U.S. person" pursuant to paragraph (o)(2) of this section, solely in their capacities as holders of such accounts, shall not be deemed "directed selling efforts."

(4) Notwithstanding paragraph (b)(l) of this section, a tombstone advertisement in a publication with a general circulation in the United States shall not be deemed "directed selling efforts," provided:

(i) The publication has less than 20% of its circulation, calculated by aggregating the circulation of its U.S. and comparable non-U.S. editions, in the United States;

(ii) Such advertisement contains a legend to the effect that the securities have not been registered under the Act and may not be offered or sold in the United States (or to a U.S. person, if the advertisement relates to an offering under § 230.903(c) (2) or (3)) absent registration or an applicable exemption from the registration requirements; and

(iii) Such advertisement contains no more information than:

(A) The issuer's name;

(B) The amount and title of the securities being sold;

(C) A brief indication of the issuer's general type of business;

(D) The price of the securities;

(E) The yield of the securities, if debt securities with a fixed (non-contingent) interest provision;

(F) The name and address of the person placing the advertisement, and whether such person is participating in the distribution;

(G) The names of the managing underwriters;

(H) The dates, if any, upon which the sales commenced and concluded;

(I) Whether the securities are offered or were offered by rights issued to security holders and, if so, the class of securities that are entitled or were entitled to subscribe, the subscription ratio, the record date, the dates (if any) upon which the rights were issued and expired, and the subscription price; and

(J) Any legend required by law or any foreign or U.S. regulatory or self-regulatory authority.

(5) Notwithstanding paragraph (b)(1) of this section, bona fide visits to real estate, plants or other facilities located in the United States and tours thereof conducted for a prospective investor by an issuer, a distributor, any of their respective affiliates or a person acting on behalf of any of the foregoing shall not be deemed "directed selling efforts."

(6) Notwithstanding paragraph (b)(1) of this section, distribution in the United States of a foreign broker-dealer's quotations by a third-party system that distributes such quotations primarily in foreign countries will not be deemed "directed selling efforts" if:

(i) Securities transactions cannot be executed between foreign broker-dealers and persons in the United States through the system; and

(ii) The issuer, distributors, their respective affiliates, persons acting on behalf of any of the foregoing, foreign broker dealers and other participants in the system do not initiate contacts with U.S. persons or persons within the United States, beyond those contacts exempted under Rule 15a–6 under the Exchange Act (17 CFR 240.15a–6).

(c) *Distributor.* "Distributor" means any underwriter, dealer, or other person who participates, pursuant to a contractual arrangement, in the distribution of the securities offered or sold in reliance on this Regulation S.

(d) *Domestic Issuer.* "Domestic issuer" means any issuer other than a foreign issuer.

(e) *Foreign Government.* "Foreign government" means the government of any foreign country or of any political subdivision of a foreign country, provided that such person would qualify to register securities under the Act on Schedule B.

(f) *Foreign Issuer.* (1) "Foreign issuer" means any issuer that is:

(i) A foreign government;

(ii) A national of any foreign country; or

(iii) A corporation or other organization incorporated or organized under the laws of any foreign country.

(2) Notwithstanding paragraph (f)(1) of this section, an issuer other than a foreign government shall not be deemed a "foreign issuer" if:

(i) More than 50 percent of the outstanding voting securities of such issuer is held of record by persons for whom a U.S. address appears on the records of the issuer, its transfer agent, voting trustee, depositary, or person performing similar functions; and

(ii) Any of the following factors are present:

(A) The majority of the executive officers or directors of the issuer are U.S. citizens or residents;

(B) More than 50 percent of the assets of the issuer are located in the United States; or

(C) The business of the issuer is administered principally in the United States.

(g) *Held of Record.* "Held of record" has the meaning assigned to that term in Rule 12g5–1 under the Exchange Act (17 CFR 240.12g5–1).

(h) *Offering Restrictions.* "Offering restrictions" means:

(1) Each distributor agrees in writing that all offers and sales of the securities prior to the expiration of the restricted period specified in § 230.903(c) (2) or (3), as applicable, shall be made only: in accordance with the provisions of § 230.903 or § 230.904; pursuant to registration of the securities under the Act; or pursuant to an available exemption from the registration requirements of the Act; and

(2) All offering materials and documents (other than press releases) used in connection with offers and sales of the securities prior to the expiration of the restricted period specified in § 230.903(c) (2) or (3), as applicable, shall include statements to the effect that the securities have not been registered under the Act and may not be offered or sold in the United States or to U.S. persons (other than distributors) unless the securities are registered under the Act, or an exemption from the registration requirements of the Act is available. Such statements shall appear:

(i) On the cover or inside cover page of any prospectus or offering circular used in connection with the offer or sale of the securities;

(ii) In the underwriting section of any prospectus or offering circular used in connection with the offer or sale of the securities; and

(iii) In any advertisement made or issued by the issuer, any distributor, any of their respective affiliates, or any person acting on behalf of any of the foregoing. Such statements may appear in summary form on prospectus cover pages and in advertisements.

(i) *Offshore Transaction.* (1) An offer or sale of securities is made in an "offshore transaction" if:

(i) The offer is not made to a person in the United States; and

(ii) Either:

(A) At the time the buy order is originated, the buyer is outside the United States, or the seller and any person acting on its behalf reasonably believe that the buyer is outside the United States; or

(B) For purposes of:

(*1*) Section 230.903, the transaction is executed in, on or through a physical trading floor of an established foreign securities exchange that is located outside the United States; or

(*2*) Section 230.904, the transaction is executed in, on or through the facilities of a designated offshore securities market described in paragraph (a) of this section, and neither the seller nor any person acting on its behalf knows that the transaction has been pre-arranged with a buyer in the United States.

(2) Notwithstanding paragraph (i)(1) of this section, offers and sales of securities specifically targeted at identifiable groups of U.S. citizens abroad, such as members of the U.S. armed forces serving overseas, shall not be deemed to be made in "offshore transactions."

(3) Notwithstanding paragraph (i)(1) of this section, offers and sales of securities to persons excluded from the definition of "U.S. person" pursuant to paragraph (o)(7) of this section or persons holding accounts excluded from the definition of "U.S. person" pursuant to paragraph (o)(2) of this section, solely in their capacities as holders of such accounts, shall be deemed to be made in "offshore transactions."

(j) *Overseas Directed Offering.* "Overseas directed offering" means:

(1) An offering of securities of a foreign issuer that is directed into a single country other than the United States to the residents thereof and that is made in accordance with the local laws and customary practices and documentation of such country; or

(2) An offering of non-convertible debt securities, or securities described in § 230.903(c)(4) (i) or (ii), of a domestic issuer that is directed into a single country other than the United States to the residents thereof and that is made in accordance with the local laws and customary practices and documentation of such country, provided that the principal and interest of the securities (or par value, as applicable) are denominated in a currency other than U.S. dollars and such securities are neither convertible into U.S. dollar-denominated securities nor linked to U.S. dollars (other than through related currency or interest rate swap transactions that are commercial in nature) in a manner that in effect converts the securities to U.S. dollar-denominated securities.

(k) *Publication With a General Circulation in the United States.* (1) "Publication with a general circulation in the United States" means any publication that:

(i) Is printed primarily for distribution in the United States; or

(ii) Has had, during the preceding twelve months, an average circulation in the United States of 15,000 or more copies per issue.

(2) Notwithstanding paragraph (k)(1) of this section, only the U.S. edition of any publication printing a separate U.S. edition will be deemed a publication with a general circulation in the United States if:

(i) Such publication, without consideration of its U.S. edition, would not meet the requirements of paragraph (k)(1) (i) or (ii) of this section; and

(ii) The U.S. edition itself meets the requirements of paragraph (k)(1) of this section.

(l) *Reporting Issuer.* "Reporting issuer" means an issuer other than an investment company registered or required to register under the 1940 Act that:

(1) Has a class of securities registered pursuant to section 12(b) or 12(g) of the Exchange Act (15 U.S.C. § 78*l*(b) or § 78*l*(g)) or is required to file reports pursuant to Section 15(d) of the Exchange Act (15 U.S.C. o8*o*(d)); and

(2) Has filed all the material required to be filed pursuant to Section 13(a) or 15(d) of the Exchange Act (15 U.S.C. 78m(a) or 78*o*(d)) for a period of at least twelve months immediately preceding the offer or sale of securities made in reliance upon this Regulation S (or for

such shorter period that the issuer was required to file such material).

(m) *Restricted Period.* "Restricted period" means a period that commences on the later of the date upon which the securities were first offered to persons other than distributors in reliance upon this Regulation S or the date of closing of the offering, and expires a specified period of time thereafter; *Provided, however*, that all offers and sales by a distributor of an unsold allotment or subscription shall be deemed to be made during the restricted period; provided, further, that in a continuous offering, the restricted period shall commence upon completion of the distribution, as determined and certified by the managing underwriter or person performing similar functions; provided, further, that in a continuous offering of non-convertible debt securities offered and sold in identifiable tranches, the restricted period for securities in a tranche shall commence upon completion of the distribution of such tranche, as determined and certified by the managing underwriter or person performing similar functions; provided, further, that in a continuous offering of securities to be acquired upon the exercise of warrants, the restricted period shall commence upon completion of the distribution of the warrants, as determined and certified by the managing underwriter or person performing similar functions, if the following requirements are satisfied:

(1) Each warrant bears a legend stating that the warrant and the securities to be issued upon its exercise have not been registered under the Act and that the warrant may not be exercised by or on behalf of any U.S. person unless registered under the Act or an exemption from such registration is available;

(2) Each person exercising a warrant is required to give:

(i) Written certification that it is not a U.S. person and the warrant is not being exercised on behalf of a U.S. person; or

(ii) A written opinion of counsel to the effect that the warrant and the securities delivered upon exercise thereof have been registered under the Act or are exempt from registration thereunder; and

(3) Procedures are implemented to ensure that the warrant may not be exercised within the United States and that the securities may not be delivered within the United States upon exercise, other than in offerings deemed to meet the definition of "offshore transaction" pursuant to paragraph (i)(3) of this section, unless registered under the Act or an exemption from such registration is available.

(n) *Substantial U.S. Market Interest.* (1) "Substantial U.S. market interest" with respect to a class of an issuer's equity securities means:

(i) The securities exchanges and inter-dealer quotation systems in the United States in the aggregate constituted the single largest market for such class of securities in the shorter of the issuer's prior fiscal year or the period since the issuer's incorporation; or

(ii) 20 percent or more of all trading in such class of securities took place in, on or through the facilities of securities exchanges and inter-dealer quotation systems in the United States and less than 55 percent of such trading took place in, on or through the facilities of securities markets of a single foreign country in the shorter of the issuer's prior fiscal year or the period since the issuer's incorporation.

(2) "Substantial U.S. market interest" with respect to an issuer's debt securities means:

(i) Its debt securities and the securities described in § 230.903(c)(4) (i) and (ii), in the aggregate, are held of record by 300 or more U.S. persons;

(ii) $1 billion or more of: the principal amount outstanding of its debt securities, the greater of liquidation preference or par value of its securities described in § 230.903(c)(4)(i), and the principal amount or principal balance of its securities described in § 230.903(c)(4)(ii), in the aggregate, is held of record by U.S. persons; and

(iii) 20 percent or more of: the principal amount outstanding of its debt securities, the greater of liquidation preference or par value of its securities described in § 230.903(c)(4)(i), and the principal amount or principal balance of its securities described in § 230.903(c)(4)(ii), in the aggregate, is held of record by U.S. persons.

(3) Notwithstanding paragraph (n)(2) of this section, substantial U.S. market interest with respect to an issuer's debt securities is calculated without reference to securities that qualify for the exemption provided by section 3(a)(3) of the Act (15 U.S.C. § 77c(a)(3)).

(o) *U.S. Person.* (1) "U.S. person" means:

(i) Any natural person resident in the United States;

(ii) Any partnership or corporation organized or incorporated under the laws of the United States;

(iii) Any estate of which any executor or administrator is a U.S. person;

(iv) Any trust of which any trustee is a U.S. person;

(v) Any agency or branch of a foreign entity located in the United States;

(vi) Any non-discretionary account or similar account (other than an estate or trust) held by a dealer or other fiduciary for the benefit or account of a U.S. person;

(vii) Any discretionary account or similar account (other than an estate or trust) held by a dealer or other fiduciary organized, incorporated, or (if an individual) resident in the United States; and

(viii) Any partnership or corporation if:

(A) Organized or incorporated under the laws of any foreign jurisdiction; and

(B) Formed by a U.S. person principally for the purpose of investing in securities not registered under the Act, unless it is organized or incorporated, and owned, by accredited investors (as defined in Rule 501(a) under the Act (§ 230.501(a) of this chapter)) who are not natural persons, estates or trusts.

(2) Notwithstanding paragraph (o)(1) of this section, any discretionary account or similar account (other than an estate or trust) held for the benefit or account of a non-U.S. person by a dealer or other professional fiduciary organized, incorporated, or (if an individual) resident in the United States shall not be deemed a "U.S. person."

(3) Notwithstanding paragraph (o)(1) of this section, any estate of which any professional fiduciary acting as executor or administrator is a U.S. person shall not be deemed a U.S. person if:

(i) An executor or administrator of the estate who is not a U.S. person has sole or shared investment discretion with respect to the assets of the estate; and

(ii) The estate is governed by foreign law.

(4) Notwithstanding paragraph (o)(1) of this section, any trust of which any professional fiduciary acting as trustee is a U.S. person shall not be deemed a U.S. person if a trustee who is not a U.S. person has sole or shared investment discretion with respect to the trust assets, and no beneficiary of the trust (and no settlor if the trust is revocable) is a U.S. person.

(5) Notwithstanding paragraph (o)(1) of this section, an employee benefit plan established and administered in accordance with the law of a country other than the United States and customary practices and documentation of such country shall not be deemed a U.S. person.

(6) Notwithstanding paragraph (o)(1) of this section, any agency or branch of a U.S. person located outside the United States shall not be deemed a "U.S. person" if:

(i) The agency or branch operates for valid business reasons; and

(ii) The agency or branch is engaged in the business of insurance or banking and is subject to substantive insurance or banking regulation, respectively, in the jurisdiction where located.

(7) The International Monetary Fund, the International Bank for Reconstruction and Development, the Inter-American Development Bank, the Asian Development Bank, the African Development Bank, the United Nations, and their agencies, affiliates and pension plans, and any other similar international organizations, their agencies, affiliates and pension plans shall not be deemed "U.S. persons."

(p) *United States.* "United States" means the United States of America, its territories and possessions, any State of the United States, and the District of Columbia.

§ 230.903 Offers or sales of securities by the issuer, a distributor, any of their respective affiliates, or any person acting on behalf of any of the foregoing; conditions relating to specific securities.

An offer or sale of securities by the issuer, a distributor, any of their respective affiliates, or any person acting on behalf of any of the foregoing, shall be deemed to occur outside the United States within the meaning of § 230.901 if it satisfies the following requirements:

(a) *Requirement of Offshore Transaction.* The offer or sale shall be made in an offshore transaction.

(b) *Prohibition Against Directed Selling Efforts.* No directed selling efforts shall be made in the United States by the issuer, a distributor, any of their respective affiliates, or any person acting on behalf of any of the foregoing.

(c) *Additional Conditions*—(1) *Securities of Certain Foreign Issuers; Overseas Directed Offerings; Securities Backed By the Full Faith and Credit of Foreign Government; Employee Benefit Plan Securities.* An offer or sale of securities may be made with no conditions other than those set forth in § 230.903 (a) and (b) if:

(i) The issuer is a foreign issuer that reasonably believes at the commencement of the offering that:

(A) There is no substantial U.S. market interest in the class of securities to be offered or sold (if equity securities are offered or sold);

(B) There is no substantial U.S. market interest in its debt securities (if debt securities are offered or sold);

(C) There is no substantial U.S. market interest in the securities to be purchased upon exercise (if warrants are offered or sold); and

(D) There is no substantial U.S. market interest in either the convertible securities or the underlying securities (if convertible securities are offered or sold);

(ii) The securities are offered and sold in an overseas directed offering;

(iii) The securities are backed by the full faith and credit of a foreign government; or

(iv) The securities are offered and sold to employees of the issuer or its affiliates pursuant to an employee benefit plan established and administered in accordance with the law of a country other than the United States, and customary practices and documentation of such country, provided that:

(A) The securities are issued in compensatory circumstances for bona fide services rendered to the issuer or its affiliates in connection with their businesses and such services are not rendered in connection with the offer and sale of securities in a capital-raising transaction;

(B) Any interests in the plan are not transferable other than by will or the laws of descent or distribution;

(C) The issuer takes reasonable steps to preclude the offer and sale of interests in the plan or securities under the plan to U.S. residents other than employees on temporary assignment in the United States; and

(D) Documentation used in connection with any offer pursuant to the plan contains a statement that the securities have not been registered under the Act and may not be offered or sold in the United States unless registered or an exemption from registration is available.

(2) *Securities of Any Reporting Issuers; Debt Securities of Non-Reporting Foreign Issuers; Non-Participating Preferred Stock and Asset-Backed Securities of Non-Reporting Foreign Issuers.* An offer or sale of securities may be made, provided that the conditions set forth in § 230.903 (a) and (b) are met and provided that:

(i) The issuer is a reporting issuer or the securities are debt securities of a foreign issuer;

(ii) Offering restrictions are implemented;

(iii) The offer or sale, if made prior to the expiration of a 40-day restricted period, is not made to a U.S. person or for the account or benefit of a U.S. person (other than a distributor); and

(iv) Each distributor selling securities to a distributor, a dealer, as defined in section 2(12) of the Act (15 U.S.C. 77b(12)), or a person receiving a selling concession, fee or other remuneration in respect of the securities sold, prior to the expiration of a 40-day restricted period, sends a confirmation or other notice to the purchaser stating that the purchaser is subject to the same restrictions on offers and sales that apply to a distributor.

(3) *Securities of Any Issuer.* An offer or sale of securities of any issuer may be made, provided that the conditions set forth in § 230.903 (a) and (b) are met and provided that:

(i) Offering restrictions are implemented;

(ii) In the case of debt securities:

(A) The offer or sale, if made prior to the expiration of a 40-day restricted period, is not made to a U.S. person or for the account or benefit of a U.S. person (other than a distributor); and

(B) The securities are represented upon issuance by a temporary global security which is not exchangeable for definitive securities until the expiration of the 40-day restricted period and, for persons other than distributors, until certification of beneficial ownership of the securities by a non-U.S. person or a U.S. person who purchased securities in a transaction that did not require registration under the Act;

(iii) In the case of equity securities:

(A) The offer or sale, if made prior to the expiration of a one-year restricted period, is not made to a U.S. person or for the account or benefit of a U.S. person (other than a distributor); and

(B) The offer or sale is made pursuant to the following conditions:

(*1*) The purchaser of the securities (other than a distributor) certifies that it is not a U.S. person and is not acquiring the securities for the account or benefit of any U.S. person or is a U.S. person who purchased securities in a transaction that did not require registration under the Act;

(*2*) The purchaser of the securities (other than a distributor) agrees to resell such securities only in accordance with the provisions of this Regulation S, pursuant to registration under the Act, or pursuant to an available exemption from registration;

(*3*) The securities of a domestic issuer contain a legend to the effect that transfer is prohibited except in accordance with the provisions of this Regulation S; and

(*4*) The issuer is required, either by contract or a provision in its bylaws, articles, charter or comparable document, to refuse to register any transfer of the securities not made in accordance with the provisions of this Regulation S; *Provided, however,* that if the securities are in bearer form or foreign law prevents the issuer of the securities from refusing to register securities transfers, other reasonable procedures (such as a legend described in paragraph (c)(3)(iii)(B)(*3*) of this

section) are implemented to prevent any transfer of the securities not made in accordance with the provisions of this Regulation; and

(iv) Each distributor selling securities to a distributor, a dealer (as defined in section 2(12) of the Act (15 U.S.C. 77b(12))), or a person receiving a selling concession, fee or other remuneration, prior to the expiration of a 40-day restricted period in the case of debt securities or a one-year restricted period in the case of equity securities, sends a confirmation or other notice to the purchaser stating that the purchaser is subject to the same restrictions on offers and sales that apply to a distributor.

(4) *Non-Participating Preferred Stock and Asset-Backed Securities.* Notwithstanding paragraphs (c)(1) through (c)(3) of this section, only the requirements of paragraph (c) of this section applicable to the offer and sale of debt securities of an issuer need be satisfied with respect to the offer and sale by such issuer of the following securities:

(i) Non-convertible capital stock, the holders of which are entitled to a preference in payment of dividends and in distribution of assets on liquidation, dissolution, or winding up of the issuer, but are not entitled to participate in residual earnings or assets of the issuer; or

(ii) Securities of a type that either:

(A) Represents an ownership interest in a pool of discrete assets, or certificates of interest or participation in such assets (including any rights designed to assure servicing, or the receipt or timeliness of receipt by holders of such assets, or certificates of interest or participation in such assets, of amounts payable thereunder), provided that the assets are not generated or originated between the issuer of the security and its affiliates; or

(B) Is secured by one or more assets or certificates of interest or participation in such assets, and the securities, by their terms, provide for payments of principal and interest (if any) in relation to payments or reasonable projections of payments on assets meeting the requirements of paragraph (c)(4)(ii)(A) of this section, or certificates of interest or participations in assets meeting such requirements.

For purposes of paragraph (c)(4)(ii) of this section, the term "assets" means: securities, installment sales, accounts receivable, notes, leases or other contracts, or other assets that by their terms convert into cash over a finite period of time.

(5) *Guaranteed Securities.* Notwithstanding paragraphs (c)(1) through (c)(4) of this section, in offerings of debt securities fully and unconditionally guaranteed as to principal and interest by the parent of the issuer of the debt securities, only the requirements of paragraph (c) of this section that are applicable to the offer and sale of the guarantee need be satisfied with respect to the offer and sale of the guaranteed debt securities.

§ 230.904 Resales.

An offer or sale of securities by any person other than the issuer, a distributor, any of their respective affiliates (except any officer or director who is an affiliate solely by virtue of holding such position), or any person acting on behalf of any of the foregoing, shall be deemed to occur outside the United States within the meaning of § 230.901 if it satisfies the following requirements:

(a) *Requirement of Offshore Transaction.* The offer or sale shall be made in an offshore transaction.

(b) *Prohibition Against Directed Selling Efforts.* No directed selling efforts shall be made in the United States by the seller, an affiliate, or any person acting on their behalf.

(c) *Additional Conditions.* In addition to the conditions set forth in §§ 230.904 (a) and (b) of this section, the following requirements are satisfied:

(1) *Resales by Dealers and Persons Receiving Selling Concessions.* In the case of an offer or sale of securities of any issuer prior to the expiration of the restricted period specified in § 230.903 (c) (2) or (3), as applicable, by a dealer, as defined in section 2(12) of the Act [15 U.S.C. 77b(12)], or a person receiving a selling concession, fee or other remuneration in respect of the securities offered or sold:

(i) Neither the seller nor any person acting on his behalf knows that the offeree or buyer of the securities is a U.S. person; and

(ii) If the seller or any person acting on the seller's behalf knows that the purchaser is a dealer, as defined in Section 2(12) of the Act (15 U.S.C. 77b(12)), or is a person receiving a selling concession, fee or other remuneration in respect of the securities sold, the seller or a person acting on the seller's behalf sends to the purchaser a confirmation or other notice stating that the securities may be offered and sold during the restricted period only: in accordance with the provisions of this Regulation S; pursuant to registration of the securities under the Act; or pursuant to an available exemption from the registration requirements of the Act.

(2) *Resales by Certain Affiliates.* In the case of an offer or sale of securities of any issuer by an officer or director of the issuer or a distributor, who is an affiliate of the issuer or distributor solely by virtue of holding such position, no selling concession, fee or other remuneration is paid in connection with such offer or sale other than the usual and customary broker's commission that would be received by a person executing such transaction as agent.

Dated: April 24, 1990.

By the Commission.

Jonathan G. Katz.

Secretary.

Note: The release contains explanatory charts illustrating the operation of Regulation S. The charts will not be reproduced in the Code of Federal Regulations.

BILLING CODE 8010-01-M

APPENDIX A

903(c) CHART
FOREIGN ISSUERS

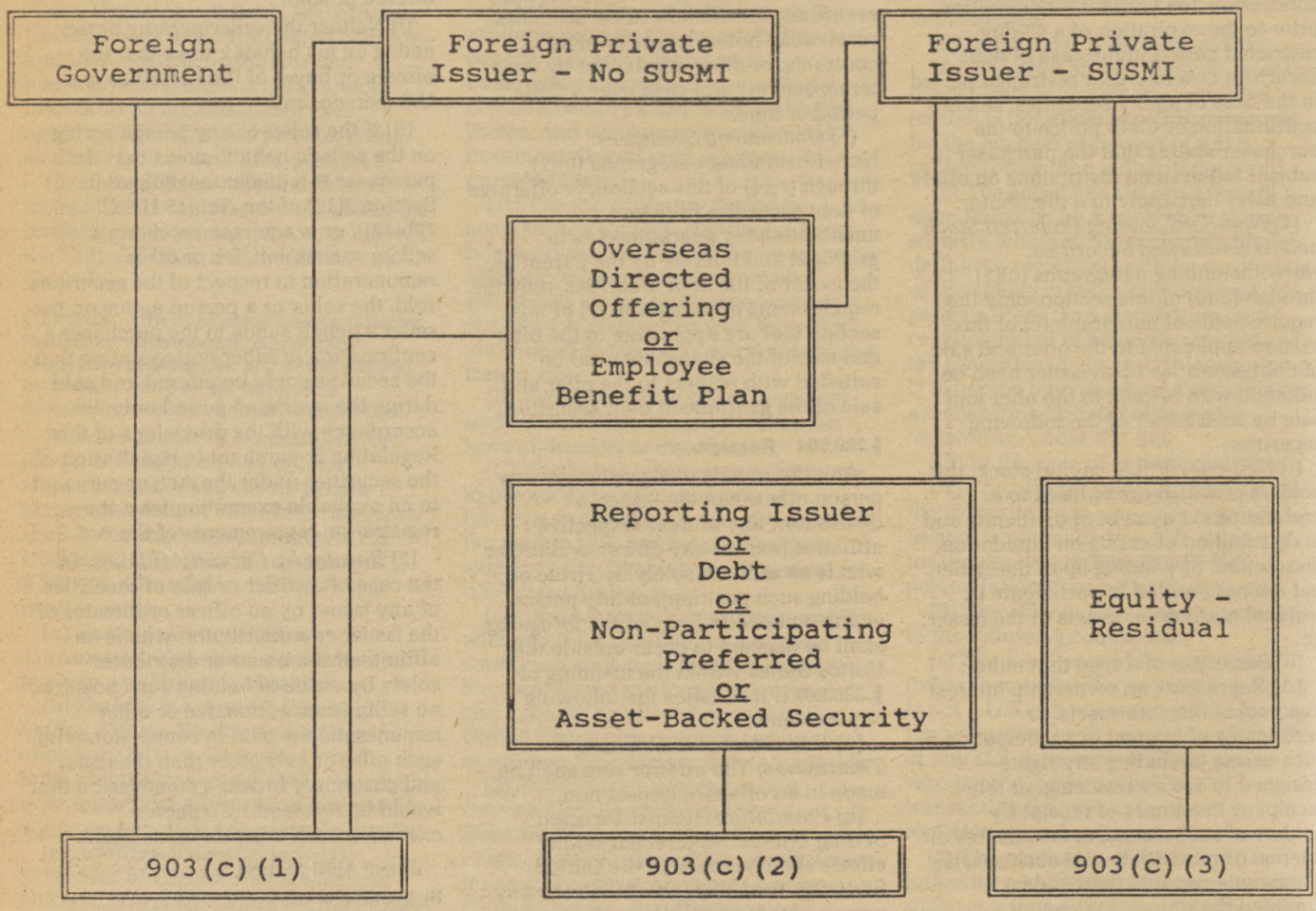

SUSMI is substantial U.S. market interest, as defined in Rule 902(n).

Note: This chart has been prepared to give a convenient overview of Regulation S. Because the chart necessarily abbreviates terms and otherwise simplifies the requirements of the safe harbor, it should not be used as a substitute for analysis of an offering under the Regulation itself.

APPENDIX B

903(c) CHART
DOMESTIC ISSUERS

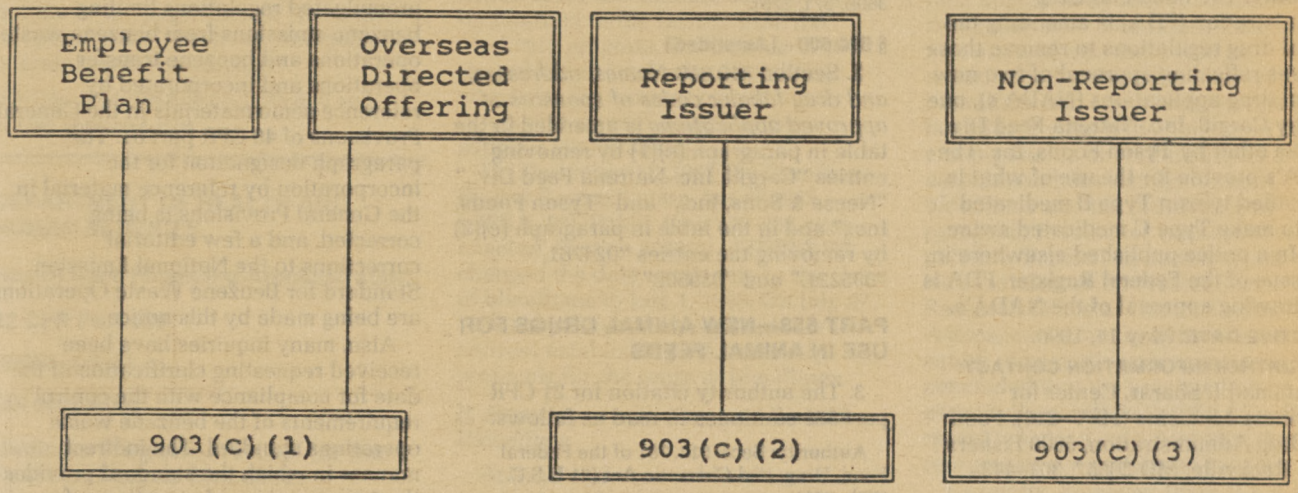

Note: This chart has been prepared to give a convenient overview of Regulation S. Because the chart necessarily abbreviates terms and otherwise simplifies the requirements of the safe harbor, it should not be used as a substitute for analysis of an offering under the Regulation itself.

[FR Doc. 90-10077 Filed 5-1-90; 8:45 am]
BILLING CODE 8010-01-C

DEPARTMENT OF HEALTH AND HUMAN SERVICES

Food and Drug Administration

21 CFR Parts 510 and 558

Animal Drugs, Feeds, and Related Products; Tylosin

AGENCY: Food and Drug Administration.

ACTION: Final rule.

SUMMARY: The Food and Drug Administration (FDA) is amending the animal drug regulations to remove those portions reflecting approval of two new animal drug applications (NADA's), one held by Cargill, Inc.-Nutrena Feed Div., and the other by Tyson Foods, Inc. The NADA's provide for the use of what is now called tylosin Type B medicated feed to make Type C medicated swine feed. In a notice published elsewhere in this issue of the **Federal Register**, FDA is withdrawing approval of the NADA's.

EFFECTIVE DATE: May 14, 1990.

FOR FURTHER INFORMATION CONTACT: Mohammad I. Sharar, Center for Veterinary Medicine (HFV–216), Food and Drug Administration, 5600 Fishers Lane, Rockville, MD 20857, 301–443–4093.

SUPPLEMENTARY INFORMATION: In a notice published elsewhere in this issue of the **Federal Register**, FDA is withdrawing approval of NADA 102–717, held by Cargill, Inc.-Nutrena Feed Div., and NADA 121–290, held by Tyson Foods. Both NADA's provide for the use of what is now called tylosin Type B medicated feed for making Type C medicated swine feed. This document removes the sponsor entries in 21 CFR 510.600 (c)(1) and (c)(2) for Cargill, Inc.-Nutrena Feeds Div., and Tyson Foods, Inc. Neese & Sons, Inc., the original sponsor, is removed from the sponsor entries in 21 CFR 510.600 (c)(1) and (c)(2) because it was never removed after the transfer of its NADA to Cargill, Inc. (October 5, 1979; 45 FR 57389). § 558.625 (b)(47) and (b)(75) (21 CFR 558.625 (b)(47) and (b)(75)) are removed and reserved to reflect the withdrawal of these NADA's.

List of Subjects

21 CFR Part 510

Administrative practice and procedure, Animal drugs, Labeling, Reporting and recordkeeping requirements.

21 CFR Part 558

Animal drugs, Animal feeds.

Therefore, under the Federal Food, Drug, and Cosmetic Act and under authority delegated to the Commissioner of Food and Drugs and redelegated to the Center for Veterinary Medicine, 21 CFR parts 510 and 558 are amended as follows:

PART 510—NEW ANIMAL DRUGS

1. The authority citation for 21 CFR part 510 continues to read as follows:

Authority: Secs. 201, 301, 501, 502, 503, 512, 701, 706 of the Federal Food, Drug, and Cosmetic Act (21 U.S.C. 321, 331, 351, 352, 353, 360b, 371, 376).

§ 510.600 [Amended]

2. Section 510.600 *Names, addresses, and drug labeler codes of sponsors of approved applications* is amended in the table in paragraph (c)(1) by removing entries "Cargill, Inc.-Nutrena Feed Div.," "Neese & Sons, Inc.," and "Tyson Foods, Inc.," and in the table in paragraph (c)(2) by removing the entries "024761," "035221," and "039502".

PART 558—NEW ANIMAL DRUGS FOR USE IN ANIMAL FEEDS

3. The authority citation for 21 CFR part 558 continues to read as follows:

Authority: Secs. 512, 701 of the Federal Food, Drug, and Cosmetic Act (21 U.S.C. 360b, 371).

§ 558.625 [Amended]

4. Section 558.625 Tylosin is amended by removing and reserving paragraphs (b)(47) and (b)(75).

Dated: April 26, 1990.

Richard H. Teske,

Deputy Director, Center for Veterinary Medicine.

[FR Doc. 90–10158 Filed 5–1–90; 8:45 am]

BILLING CODE 4160–01–M

ENVIRONMENTAL PROTECTION AGENCY

40 CFR Part 61

[AD–FRL–3761–6]

National Emission Standards for Hazardous Air Pollutants; Benzene Emissions From Chemical Manufacturing Process Vents, Industrial Solvent Use, Benzene Waste Operations, Benzene Transfer Operations, and Gasoline Marketing System; Correction

AGENCY: Environmental Protection Agency (EPA).

ACTION: Final rule; Correction.

SUMMARY: This notice corrects errors and makes clarifications in the regulatory text of the General Provisions and the final National Emission Standard for Benzene Waste Operations which appeared in the **Federal Register** on March 7, 1990 (55 FR 8292).

FOR FURTHER INFORMATION CONTACT: Ms. Shirley Tabler at (919) 541–5256, Standards Development Branch, Emission Standards Division (MD–13), U.S. Environmental Protection Agency, Research Triangle Park, North Carolina 27711.

SUPPLEMENTARY INFORMATION: On March 7, 1990 (55 FR 8292), EPA promulgated regulations limiting benzene emissions from benzene waste operations and benzene transfer operations and incorporated by reference some materials in the General Provisions of 40 CFR part 61. The paragraph designation for the incorporation by reference material in the General Provisions is being corrected, and a few editorial corrections to the National Emission Standard for Benzene Waste Operations are being made by this notice.

Also, many inquiries have been received requesting clarification of the date for compliance with the control requirements of the benzene waste operations standard. The indirect manner in which the standard provides the 2-year waiver of compliance for installation of controls has created confusion regarding the compliance date. Consequently, EPA is clarifying that existing sources, as provided by the statute, need not comply until 90 days after the effective date of the standard, and that sources needing to install controls need not come into compliance until 2 years from the effective date. Thus, the compliance date becomes March 7, 1992. Paragraph (b) of § 61.342 is therefore revised to require compliance with control requirements by March 7, 1992. This change is solely intended to clarify the compliance date and does not alter the control requirements.

Dated: April 24, 1990.

Michael Shapiro,

Acting Assistant Administrator for Air and Radiation.

The following corrections are being made in FRL 3706–1; National Emission Standards for Hazardous Air Pollutants; Benzene Emissions from Chemical Manufacturing Process Vents, Industrial Solvent Use, Benzene Waste Operations, Benzene Transfer Operations, and Gasoline Marketing System published in the **Federal Register** on March 7, 1990 (55 FR 8292).

1. The amendatory instruction 2, on page 8341, column 1, is corrected to read "Section 61.18 is amended by adding paragraph (d) to read as follows:"

§ 61.18 [Corrected]

1a. Paragraph (c) of § 61.18 on page 8341, column 2, is correctly redesignated as paragraph (d).

§ 61.342 [Corrected]

2. On page 8348, column 2, in paragraph (b) of § 61.342, in line 9, change "1990" to "1992."

§ 61.356 [Corrected]

3. In paragraph (j)(9) of § 61.356 on page 8359, column 2, line 5 from the bottom of the page, change "the owner or operator shall each" to "the owner or operator shall record each"

[FR Doc. 90-10196 Filed 5-1-90; 8:45 am]
BILLING CODE 6560-50-M

DEPARTMENT OF HEALTH AND HUMAN SERVICES

Health Care Financing Administration

42 CFR Part 405

[BERC-473-F]

RIN 0938-AD52

Medicare Program; Protocol for the Reuse of Dialysis Bloodlines

AGENCY: Health Care Financing Administration (HCFA), HHS.

ACTION: Final rule.

SUMMARY: This final rule implements section 1881(f)(7) (B) and (C) of the Social Security Act, added by sections 9335(k) and 4036(c) of the Omnibus Budget Reconciliation Acts of 1986 and 1987. That legislation precludes end-stage renal disease (ESRD) facilities from reusing dialysis bloodlines after July 1, 1988 unless the Secretary has established a protocol for their reuse and the facility follows the protocol. These provisions constitute both a Medicare condition of coverage for ESRD facilities and a condition for payment for dialysis treatment involving reused bloodlines for those facilities which elect to reuse them.

EFFECTIVE DATE: June 1, 1990.

FOR FURTHER INFORMATION CONTACT: John Powell, (301) 966-9671.

SUPPLEMENTARY INFORMATION:

I. Background

A. Summary of Rulemaking Activities

Under section 9335(k) of the Omnibus Budget Reconciliation Act of 1986 (OBRA '86), Public Law 99-509, which established a new section 1881(f)(7) of the Social Security Act (the Act), dialysis facilities are prohibited from reusing certain items while performing hemodialysis on or after January 1, 1988, unless the Secretary has established protocols for their reuse and the facilities follow the protocols. Reuse involves the cleaning, disinfecting, and preparation of disposable hemodialysis items for subsequent use for the same patient. The statute applies to dialyzer filters, bloodlines and other dialysis supplies. The failure of a dialysis facility to comply with this requirement constitutes grounds for denial of payment for the affected services or termination of the facility from the Medicare program. On October 3, 1987, we published final rules containing standards for reuse of hemodialyzer filters and several other dialysis supplies (52 FR 36926).

On December 22, 1987 the Omnibus Budget Reconciliation Act of 1987 (OBRA '87), Public Law 100-203, was enacted. Section 4036(c) of OBRA '87 changed the date applicable to the reuse of bloodlines to July 1, 1988. On July 27, 1988 we published a proposed rule to address establishing the necessary protocols for the reuse of bloodlines.

B. Experience with New and Reused Bloodlines

Arterial and venous bloodlines are used to transfer a patient's blood through the filtering devices of a hemodialysis machine and to return it to the patient. Because bloodlines are essential to the operation of the hemodialysis machine, they are considered medical devices and thus are subject to the Food and Drug Administration (FDA) regulations, under the authority of the Medical Device Amendments of 1976. As discussed below, manufacturers of accepted bloodlines have labeled them "for single use only". Despite that labeling, it has been the practice of many dialysis facilities to reuse bloodlines.

The Public Health Services (PHS) has reviewed a considerable amount of available evidence concerning dialysis performed with new and reused bloodlines. The evidence available to PHS came from several major studies, each of which concluded that there was no detrimental clinical consequence associated with reusing bloodlines. A study conducted by National Medical Care (NMC), an organization that operates a number of dialysis facilities, that involved approximately 12,000 patients annually, indicated that since 1985, their arterial bloodline reuse program has not resulted in any statistical difference in patient complication rates between their facilities reusing arterial bloodlines and those not reusing them. A second study was conducted by a physician, Dr. David Ogden, a nephrologist associated with the University of Arizona and a renal director of a dialysis center. This study showed that out of 170,000 reuses of bloodlines under his direction there were no substantial problems with reuse. In addition a study conducted by the Centers for Disease Control, "National Surveillance of Dialysis—Associated Hepatitis and Other Diseases in the United States," during 1986 showed that 14 percent of centers then approved by HCFA reported reusing arterial bloodlines. This study also showed that there was no association between the reuse of bloodlines and any increased risk of hepatitis B virus (HBV) infection in either patients or staff members and no association between the reuse of bloodlines and the occurrence of pyrogenic reaction or septicemia in patients. Further, an earlier report by the National Center for Health Services Research Office of Health Technology Assessment examined the relative safety of hemodialyzer reuse and concluded that the practice (which essentially parallels that for bloodlines reuse) is indeed safe, provided that reprocessing is performed properly.

Currently, however, there is not a consensus within the dialysis community concerning a single use protocol for dialysis bloodlines (the AAMI protocol for reuse of bloodlines has not been formally accepted by the organization membership). Also, to the extent protocols might vary to account for particular characteristics of individual bloodlines, the Secretary is unable to establish a protocol applicable to all bloodlines. Therefore, the Secretary is establishing a regulation to permit Medicare reimbursement for bloodlines reused in accordance with FDA acceptance as described below.

In December 1986, the Director of FDA's Center for Devices and Radiological Health sent a letter to all domestic and foreign manufacturers of dialyzers and bloodlines. The letter urged manufacturers to reassess their labeling practice and to consider providing product-specific information and precautionary statements relevant to reprocessing and reuse. This action was taken in the belief that the majority of manufacturers to whom the letter was directed are aware that their devices are being reused.

On January 28, 1987, FDA received a request from a bloodline manufacturer, National Medical Care Inc., to have its arterial bloodline, Erika model number 9608, considered for relabeling. No other requests have been received. That manufacturer has applied to the FDA,

under section 510(k) of the Federal Food, Drug, and Cosmetic Act to have its brand of arterial bloodlines relabeled to state "sterility guaranteed for first use" and has supplied a protocol of proper reuse technique. The FDA accepted the proposed protocol and the request to relabel the arterial bloodlines on September 14, 1988. The acceptance of the proposed protocol by FDA was with the understanding that reuse of bloodlines would be limited to the same patient.

II. Proposed Rule

On July 27, 1988, (53 FR 28236), we published a proposed rule that would implement the requirements concerning bloodlines contained in section 1881(f)(7) of the Act. We proposed to amend 42 CFR 405.2150, a condition of coverage that contains requirements with which facilities must comply if they reuse hemodialyzers and other dialysis supply items.

Under the proposed rule, we would not permit Medicare reimbursement to ESRD facilities that reuse bloodlines labeled "for single use only." In addition, reuse of bloodlines could occur only after the manufacturer's reuse protocol is reviewed and accepted by the Food and Drug Administration (FDA) pursuant to the premarket notification (section 510(k)) provision of the Federal Food, Drug, and Cosmetic Act. Finally, the proposed regulation required an ESRD facility to adhere to the manufacturer's protocol in the conduct of bloodline reuse. We proposed to incorporate these requirements in current ESRD regulations by revising the introductory statement of § 405.2150 to reflect the statute's requirements that a facility's failure to comply with the standards for this section constitutes grounds for: (1) Denial of payment for the dialysis treatment affected; and (2) termination from participation in the Medicare ESRD program.

We proposed that the Secretary would establish as his protocol, in compliance with the provisons of section 1881(f)(7) of the Act, a manufacturer's protocol that has been accepted by the FDA under section 510(k) of the Federal Food, Drug, Cosmetic Act. Under the section 510(k) procedure, manufacturers must show "substantial equivalence" to a previously marketed device. The manufacturer must also demonstrate comparable safety and effectiveness of the device, which may include clinical data, to substantiate that it can be reused safely and effectively

Medical devices that have been approved for marketing by FDA on the basis of a premarket approval application (under 27 U.S.C. 360(c)) or a section 510(k) application submitted with clinical data are considered safe and effective for Medicare purposes when used for the conditions prescribed, recommended, or suggested in the labeling of the devices.

III. Update of Bloodlines Reuse Acceptance

On September 14, 1988 the FDA accepted the proposed reuse protocol submitted by the manufacturer noted earlier in this preamble, as well as that manufacturer's request to relabel its arterial bloodlines, "sterility guaranteed for first use only". In the notification to the manufacturer, FDA noted that the acceptance pertains only to the Erika brand arterial bloodline model number 9608. Safety could be assured if the bloodline is manually processed according to the manufacturer's protocol using only formaldehyde as a germicide. In granting the acceptance, FDA noted that data accompanying the submittal gave assurance that the device was capable of being reused up to 9 times.

The effect of this acceptance is that, upon the effective date of our final rules implementing the bloodline reuse requirements of section 1881(f)(7) of the Act, the Erika arterial bloodline model 9608, reused as described above, would be in compliance with our condition of participation. Accordingly, on November 4, 1988 we informed HCFA regional offices of this FDA acceptance, but noted that the prohibition against bloodline reuse effective July 1, 1988 is to continue in full force and effect until final rules are established.

IV. Regulations and Response to Comments on Proposed Rule

In response to our request for public comments in the **Federal Register** on July 27, 1988, we received 13 letters, primarily from organizations representing dialysis patients, health professionals, providers of dialysis care and medical device manufacturers. The following summarizes the comments received and our responses.

Comment: A few respondents, particularly those interested in patients' rights, generally opposed the regulation because they oppose reuse of bloodlines. Their stated concern is that reuse of bloodlines is unsafe and long term effects have not been evaluated.

Response: The decision to use a new or reused bloodline for a particular patient is a medical determination by the patient's treating physician and facility. Our chief concern is that, if bloodlines are reused, they have been properly processed. The decision whether to reuse a bloodline is voluntary on the part of the physician and facility but, if reused, such reuse must be recorded on the patient's medical record and the use of an accepted protocol verified through the facility survey procedure.

Regarding the issue of safety, a Public Health Service Interagency Task Force on Dialysis reviewed available scientific and clinical literature, as well as retrospective data drawn from clinical reuse experience, and determined that bloodline reuse is safe and effective provided that reprocessing is properly performed. Based on the studies conducted and the evidence available, no long term reuse adverse effects have been recorded. We will, however, continue to monitor this aspect very carefully through our ongoing facility survey procedure.

Comment: A few commenters believe we should differentiate between the reuse of venous and arterial bloodlines.

Response: In the review of manufacturer's protocols, the FDA can undertake separate evaluations of protocols for venous and arterial bloodlines. To date, FDA has received and reviewed a premarket notification submission from only one manufacturer who offered a reuse protocol solely for arterial bloodlines.

Comment: Several organizations that supported reuse of bloodlines recommended that the Secretary accept the protocol for bloodline reuse being developed by the Association for the Advancement of Medical Instrumentation (AAMI).

Response: The AAMI protocol for reuse of bloodlines has not been formally accepted by the organization's membership and is still considered to be at the proposal stage. Until final consensus is reached and the guidance document is completed, we feel it both appropriate and expedient to accept as the Secretary's protocol the FDA premarket notification (section 510(k)) process as outlined in the proposed rule. When the AAMI technical information report is publicly available, depending upon the scientific advice received from the Public Health Service, HCFA may consider proposing in regulations the adoption of a generic protocol.

Comment: Several commenters expressed concern that the reuse process would cause degradation of bloodlines. For example, they questioned whether use of formaldehyde and pressure pumps might cause chemical breakdown of the tubing. They also noted that reused tubing can becomne stiff and unable to be properly clamped, or pitted with small air holes caused by hypodermic needles, causing

the dialysis procedure, in their opinion, to be less effective.

Response: While the potential for these effects does exist, available evidence reviewed by the Public Health Service indicates that bloodline reuse, if performed properly, can avoid these occurrences. The FDA's section 510(k) procedures can determine whether the integrity of the particular bloodline may be maintained with the amount and kind of reprocessing indicated in the manufacturer's protocol, and therefore whether the bloodline may be safely and effectively reused as described in the manufacturer's reuse protocol. FDA will not accept a manufacturer's protocol which does not meet such standards. The areas of concern cited above, as well as others, will be carefully monitored on an ongoing basis by experienced, well informed surveyors for every facility survey. If failure to follow the approved protocol is documented, termination of the facility's participation in the Medicare program will be initiated. As required by section 1881(f) of the Act, payment will also be denied to the facility for services in which the improper use occurs.

Comment: One medical device manufacturer objected to the requirement that Medicare reimbursement is to be predicated on the relabeling of bloodlines and the submission and acceptance of product-specific reuse protocols. The commenter asserted that manufacturers of single use devices do not control the settings in which patient care is delivered, and cannot anticipate the possible variations in reprocessing techniques or the circumstances in which reuse will be practiced. The commenter concluded that manufacturers cannot provide evidence that such practices are safe and effective. Another manufacturer supported the proposed rule and commented positively on the viability of the FDA's premarket notification review process to assure that bloodlines can be reused as safety and effectively as bloodlines used for the first time.

Response: We disagee with the first commenter's assertions. The proposed regulation plainly stated that an ESRD facility cannot receive payment when bloodlines labeled "for single use only" are reused, or when a protocol for the bloodline used by the facility has not been accepted by the Secretary, or the facility is not abiding by an established protocol. The goal of the statute and our proposed regulation is to ensure that all reuse of commercially available bloodlines is in conformance with a scientifically credible procedure. Manufacturer compliance with respect to relabeling and the submission of product-specific reuse protocols is not compulsory. With respect to the availability of sufficient evidence to judge the safety and effectiveness of bloodline reuse, the Public Health Service Task Force review discussed earlier represents a full evaluation of all currently available information on this practice, and has concluded that reuse is safe and effective provided that reprocessing is properly performed. FDA believes it can determine whether bloodline re-processing will be safe and effective if it is done in accordance with a stated protocol.

Comment: A commenter recommended that beneficiaries not be held liable for payment of the dialysis where Medicare denies payment because the facility does not comply with the reuse requirements of section 1881(f)(7)(C) of the Act.

Response: We agree with the commenter that patient liability should be limited where a facility cannot receive payment from Medicare for an otherwise covered service solely because the facility does not comply with the reuse requirements of the Act. However, authority to limit the liability of beneficiaries under certain circumstances is found in section 1879 of the Act. Section 1879 has a limited applicability under the law to several specific denial situations. These are: Whenever an item or service is denied as not reasonable and necessary or as involving custodial care; where home health agency (HHA) services are denied because the homebound requirements are not met, or because the intermittent skilled nursing requirement is not met; where the sole basis for denying an inpatient claim for hospital or skilled nursing facility (SNF) services is that the patient was furnished services in a bed in the facility that either was noncertified or inappropriately certified to permit Medicare payment for the services furnished to the patient. Since the basis for denial involving reuse of bloodlines during dialysis is for another statutory reason, limitation of liability considerations under section 1879 of the Act do not apply to such denials.

Comment: Several commenters expressed a view that allowing the development of multiple protocols would result in confusion on the part of dialysis facilities, especially if they change manufacturers and protocols.

Response: We do not believe that significant variances in reuse practice would result from the adoption by HCFA of different protocols. This view is based on the fact that the fundamental elements of the bloodline reuse procedure do not vary greatly from one manufacturer's bloodline to another. To the extent protocols might vary to account for particular characteristics of individual bloodlines, we would expect that manufacturers would provide each facility with specific instructions and training needed to ensure safe and effective reuse of their bloodlines. We see this situation as generally analogous to the use of the wide range of medical technologies, in which most device firms provide consultative services to assist users in the safe and effective use of their devices.

Comment: Several commenters recommended that we should use a different approval procedure than the section 510(k) mechanism for accepting reuse of bloodlines.

Response: We disagree. The section 510(k) procedure, as authorized by the Federal Food, Drug, and Cosmetic Act, has been used effectively to assess equivalent safety and effectiveness of a wide range of hemodialysis machines, hemodialyzer filters and other dialysis supplies. This procedure is a proven and practical method of establishing the equivalency of medical devices produced after May 28, 1976 to those in commercial distribution prior to that time. In establishing equivalency, the FDA may require manufacturers to submit clinical data to substantiate that a relabeled bloodline intended for reuse can perform as safely and effectively as a bloodline to which it is being compared, i.e., a new bloodline labeled "for single use only."

Comment: A commenter objected to the requirement that bloodlines be relabeled, citing the current practice of allowing hemodialyzers that are labeled "for single use only" to be reused under our regulations at 42 CFR 405.2150(a).

Response: The current practice of allowing dialyzer filters that are labeled "single use only" to be reused is one based on a consensus among practitioners and providers of dialysis services. Presently, we do not have the same consensus within the dialysis community concerning the reuse of dialysis bloodlines. Medical device manufacturers do have an option, as explained in an earlier response, to obtain FDA clearance to relabel their bloodlines and for a reuse protocol. If the manufacturer chooses not to apply for relabeling, then facilities would be prohibited from reusing that manufacturer's bloodlines. Facilities which violated this rule would be subject to termination from the program

and denial of payment for the affected services.

Comment: One commenter noted that the regulation does not impose a response time on FDA to a request for review of a manufacturer's protocol. The commenter recommended 60 days be considered as a requirement for timely response.

Response: Under authority granted by the Federal Food, Drug and Cosmetic Act (21 U.S.C. 301 et. seq.) the FDA has 90 days after a complete request is received to decide if a bloodline manufactured after 1976 and a related protocol for reuse can be accepted under the premarket notification provision of the law, which requires a showing of substantial equivalence. We believe the 90-day-deadline is sufficient to produce appropriately speedy action.

Comment: Several commenters recommended a separate, impartial body, rather than the FDA as a government organization, be given responsibility for determining standards for bloodline reuse.

Response: The FDA, which is an impartial body, is not responsible for "determining standards" for bloodline reuse as the commenter implies. Under the FDA section 510(k) procedure, manufacturers of bloodlines are required to demonstrate to the FDA that the devices can be safely and effectively reused in accordance with an accompanying protocol. The regulations merely recognize FDA's expertise in this area. The Secretary has established a bloodline reuse protocol by adopting the FDA section 510(k) process. This protocol will be enforced by HCFA as part of its ESRD standards, whenever a facility that elects to engage in the bloodline reuse practice is surveyed.

As stated earlier, when and if the Association for the Advancement of Medical Instrumentation completes its work in this area, HCFA will consider proposing the adoption of a generic protocol.

Comment: One commenter recommended that the evidence of bloodline reuse safety and effectiveness of a manufacturer's protocol should be publicly available and also recommended that HCFA clearly state when dialyzer bloodline reuse may be practiced and with which bloodlines using the specific manufacturer's protocol.

Response: The data used by the FDA in reaching a decision concerning accepting bloodlines for reuse is publicly available. When bloodline labeling is accepted by FDA, such acceptance will be communicated by HCFA to facilities, intermediaries, State survey agencies and others, using our normal means for communicating such technical information. The technical information is made available through revision of our technical manuals, such as the ESRD facility manual (directed to all approved ESRD facilities), regional office and State operation manuals directed to all State health departments and survey agencies. Any interested person may obtain a copy of the technical information by contacting his/her local State health department or HCFA regional office.

Comment: One commenter recommended that we add a new subparagraph 4 to § 405.2150(d) to require that the governing body of an ESRD facility adopt a policy that would include a manufacturer's protocol for reuse of the particular bloodline accepted by the FDA.

Response: We do not believe the change recommended would enhance either the clarity or enforceability of the regulation. As presently written, § 405.2150(d) clearly states that for a facility to receive payment for bloodline reuse, it must follow a manufacturer's protocol found acceptable by the FDA or be subject to termination from the Medicare Program.

V. Final Rule

After consideration of the public comments, and for the reasons stated in our responses to those comments, we are making final the regulations as proposed. For sake of clarity, we are making explicit reference to the use of the FDA section 510(k) provision and the fact that bloodlines are reused for the same patient.

VI. Technical Amendment

On October 2, 1987 we published a final rule (52 FR 36926) that contained the standards and conditions for safe and effective hemodialyzer reuse and reprocessing, enforceable as Medicare conditions for coverage. As part of that final rule, in § 405.2150(a)(2) Condition: Reuse of hemodialyzers and other dialysis supplies, we included a table establishing staff exposure limits to a number of active ingredients contained in chemical germicides utilized in reprocessing hemodialyzers and other dialysis supplies in dialysis facilities. These limits are set by the Department of Labor, Occupational Safety and Health Administration (OSHA). (See 29 CFR 1910.1000) One of the active ingredients listed in the Table is glutaraldehyde, for which no limit had been developed. On January 19, 1989 OSHA published a final rule (54 FR 2464) in which OSHA established an exposure ceiling of 0.2 ppm on glutaraldehyde. We are therefore making a conforming change to § 405.2150(a)(2) to incorporate the exposure ceiling.

As indicated, this technical amendment is necessary to conform our regulations with the cross-referenced 29 CFR 1910.1000. The OSHA final rule is already in effect. We believe that it would be impracticable, unnecessary, and contrary to the public interest to publish this technical conforming change as a proposal and to request public comment. Therefore, we find good cause to waive publication of a proposed rule for this technical conforming action.

VII. Regulatory Impact Statement

A. Executive Order 12291 and Regulatory Flexibility Act

Executive Order 12291 (E. O. 12291) requires us to prepare and publish a regulatory impact analysis for any regulation that meets one of the E. O. criteria for a "major rule"; that is, that will be likely to result in: An annual effect on the economy of $100 million or more; a major increase in costs or prices for consumers, individual industries, Federal, State, or local government agencies, or geographic regions; or, significant adverse effects on competition, employment, investment, productivity, innovation, or on the ability of United States-based enterprises to compete with foreign-based enterprises in domestic or export markets.

In addition, we generally prepare a regulatory flexibility analysis that is consistent with the Regulatory Flexibility Act (RFA) (5 U.S.C. 601 through 612), unless the Secretary certifies that a regulation will not have a significant economic impact on a substantial number of small entities. For purposes of the RFA, we treat as small entities all ESRD facilities and those manufacturers and suppliers of bloodlines who meet the Small Business Administration guidelines for a small business.

In the proposed regulation, we included a voluntary regulatory impact and regulatory flexibility analysis because of the potential controversial nature of this regulation, the number of comments we expected to receive, and an anticipated effect on small entities. The voluntary analyses attempted to describe the effects the proposed regulation would have on manufacturers and ESRD facilities.

We received only 2 comments concerning the impact statement. With the exception of our responses to the two comments discussed below, our

final analysis remains the same as the initial analysis. This is because we did not receive any further data that would allow us to better predict the effects of this regulation.

Comment: We received a comment from a professional association representing administrators from a large number of dialysis facilities. The association was concerned that manufacturers' costs of obtaining FDA acceptance would result in an increase in the cost of bloodlines.

Response: It is possible that the manufacturers of bloodlines will initially pass on the costs of obtaining FDA acceptance to the dialysis facilities. However, this regulation does not restrict a facility's purchasing behavior. Facilities will retain their right to purchase bloodlines from their manufacturer or supplier of choice based on whatever criteria they choose. Thus, if a manufacturer increases costs, the facility has the option to switch to a different manufacturer.

Comment: We received comments from a supplier who professed to be one of the largest suppliers of hemodialysis bloodlines in the U.S. and to have over 70 percent of its revenues derived from hemodialysis bloodline sales in the U.S. The supplier alleged that less than 2 percent of the end-users of its products practice reuse of bloodlines and that it would be significantly affected if reuse were to grow.

Response: We recognize that a significant increase in reuse could affect suppliers. However, we have no way to determine the possible changes in the practice of bloodline reuse or its subsequent effect on suppliers.

We have determined that the technical amendment in section VI of the preamble does not produce any effects that will meet any of the criteria of E.O. 12291 or of the RFA since it merely makes a conforming change to § 405.2150(a)(2) to incorporate the exposure ceiling for glutaraldehyde.

Small Rural Hospitals

Section 1102(b) of the Social Security Act requires the Secretary to prepare a regulatory impact analysis for any rule that may have a significant impact on the operations of a substantial number of small rural hospitals. Such an analysis must conform to the provisions of section 604 of the RFA. For purposes of section 1102(b) of the Act, we define a small rural hospital as a hospital with fewer than 50 beds located outside a metropolitan statistical area.

We have determined, and the Secretary certifies, that this proposed rule will not have a significant economic impact on a substantial number of rural hospitals.

C. Paperwork Reduction Act of 1980

This final rule does not impose information collection requirements; consequently, it need not be reviewed by the Executive Office of Management and Budget under the authority of the Paperwork Reduction Act of 1980 (44 U.S.C. 3501 et seq).

List of Subjects in 42 CFR Part 405

Administrative practice and procedure, Health facilities, Health professions, Kidney diseases, Laboratories, Medicare, Nursing homes, Reporting and recordkeeping requirements, Rural areas, X-rays.

42 CFR part 405, subpart U, is amended as set forth below:

PART 405—FEDERAL HEALTH INSURANCE FOR THE AGED AND DISABLED

Subpart U—Conditions for Coverage of Suppliers of End-Stage Renal Disease (ESRD) Services

1. The authority citation for part 405, subpart U, continues to read as follows:

Authority: Secs. 1102, 1861, 1862(a), 1871, 1874, and 1881 of the Social Security Act (42 U.S.C. 1302, 1395x, 1395y(a), 1395hh, 1395kk, and 1395rr), unless otherwise noted.

2. Section 405.2150 is amended by revising the introductory paragraph, by revising the table after paragraph (a)(2) and by adding a new paragraph (d) to read as follows:

§ 405.2150 Condition: Reuse of hemodialyzers and other dialysis supplies.

An ESRD facility that reuses hemodialyzers and other dialysis supplies meets the requirements of this section. Failure to meet any of paragraphs (a)-(d) of this section constitutes grounds for denial of payment for the dialysis treatment affected and termination from participation in the Medicare program.

(a) * * *

(2) * * *

TABLE

Substance/material	Limits
Formaldehyde	3 ppm TWA. 5 ppm Ceiling. (1 ppm TWA proposed by OSHA).
Glutaraldehyde	0.2 ppm ceiling.
Phenol	5 ppm TWA.
Glutaraldehyde-Phenol	Individual standards of recommendations should apply.
Peracetic Acid	None developed.

TABLE—Continued

Substance/material	Limits
Chlorine Dioxide Syn: Chlorine Oxide.	100 ppb TWA.
Hydrogen Peroxide	1 ppm TWA.
Chlorine	1 ppm Ceiling.

TWA = Time weighted average.
Ceiling = Maximum exposure ceiling.
ppm = Parts per million.
ppb = Parts per billion.

* * * * *

(d) *Standard: Bloodlines.* If the ESRD facility reuses bloodlines, it must—

(1) Limit the reuse of bloodlines to the smae patient;

(2) Not reuse bloodlines labeled for "single use only";

(3) Reuse only bloodlines for which the manufacturer's protocol for reuse has been accepted by the Food and Drug Administration (FDA) pursuant to the premarket notification (section 510(k)) provision of the Food, Drug, and Cosmetic Act; and

(4) Follow the FDA-accepted manufacturer's protocol for reuse of that bloodline.

(Catalog of Federal Domestic Assistance Program No. 13.714, Medical Assistance; and Program No. 13.774, Medicare—Supplementary Medical Insurance Program).

Dated: February 28, 1990.

Gail R. Wilensky,

Administrator, Health Care Financing Administration.

Approved: March 28, 1990.

Louis W. Sullivan,

Secretary.

[FR Doc. 90-10166 Filed 5-1-90; 8:45 am]

BILLING CODE 4120-01-M

DEPARTMENT OF THE INTERIOR

Bureau of Land Management

43 CFR Public Land Order 6777

[AK-932-00-4214-10; F-013619]

Revocation of Public Land Order No. 1697; Classification and Opening of the Mineral Estate for Selection by the State of Alaska; Alaska

AGENCY: Bureau of Land Management, Interior.

ACTION: Public land order.

SUMMARY: This order revokes a public land order in its entirety as it affects 25 acreas of public land withdrawn for use of the Department of the Air Force for the Pedro Dome Radio Relay Site. The land has been conveyed out of Federal ownership, with the exception of the mineral estate therein. This action will classify and open the mineral estate of

the land for selection by the State of Alaska, if such land is otherwise available. If not selected by the State, the mineral estate of the land will remain closed to all other forms of appropriation and disposition under the public land laws, including the mining and mineral leasing laws, pursuant to Public Land Order No. 5187, as amended.

EFFECTIVE DATE: May 2, 1990.

FOR FURTHER INFORMATION CONTACT: Sandra C. Thomas, BLM Alaska State Office, 222 W. 7th Avenue, No. 13, Anchorage, Alaska 99513–7599, 907–271–5477.

By virtue of the authority vested in the Secretary of the Interior by Section 204 of the Federal Land Policy and Management Act of 1976, 43 U.S.C. 1714 (1982), and by section 17(d)(1) of the Alaska Native Claims Settlement Act, 43 U.S.C. 1616(d)(1) (1982), it is ordered as follows:

1. Public Land Order No. 1697 is hereby revoked as it affects the following described land:

Fairbanks Meridian

T 2 N., R. 1 E.

Sec. 2, N½NE¼SW¼NW¼, and

All that part of lot 4 as described by the following aliquot parts: SE¼NW¼NW¼, S½ NE¼NW¼NW¼, and E½SW¼NW¼NW¼.

The area described contains approximately 25 acres.

2. Subject to valid existing rights, the mineral estate of the land described above is hereby classified as suitable for and opened to selection by the State of Alaska under either the Alaska Statehood Act of July 7, 1958, 48 U.S.C. prec. 21 (1982), or selection 906(b) of the Alaska National Interest Lands Conservation Act, 43 U.S.C. 1635 (1982).

3. As provided by section 6(g) of the Alaska Statehood Act, the State of Alaska is provided a preference right of selection for the mineral estate of the land described above, for a period of ninety-one (91) days from the date of publication of this order, if the mineral estate of the land is otherwise available. Any of the mineral estate of the land described herein that is not selected by the State of Alaska will continue to be subject to the terms and conditions of Public Land Order No. 5187, as amended, and any other withdrawal of record.

Dated: April 16, 1990.

Dave O'Neil,

Assistant Secretary of the Interior.

[FR Doc. 90–10165 Filed 5–1–90; 8:45 am]

BILLING CODE 4310–JA–M

FEDERAL EMERGENCY MANAGEMENT AGENCY

44 CFR Part 64

[Docket No. FEMA 6871]

Suspension of Community Eligibility

AGENCY: Federal Emergency Management Agency, FEMA.

ACTION: Final rule.

SUMMARY: This rule lists communities, where the sale of flood insurance has been authorized under the National Flood Insurance Program (NFIP), that are suspended on the effective dates listed within this rule because of noncompliance with the floodplain management requirements of the program. If FEMA receives documentation that the community has adopted the required floodplain management measures prior to the effective suspension date given in this rule, the suspension will be withdrawn by publication in the **Federal Register.**

EFFECTIVE DATES: The third date ("Susp.") listed in the third column.

FOR FURTHER INFORMATION CONTACT: Frank H. Thomas, Assistant Administrator, Office of Loss Reduction, Federal Insurance Administration, (202) 646–2717, Federal Center Plaza, 500 C Street, Southwest, room 417, Washington, DC 20472.

SUPPLEMENTARY INFORMATION: The National Flood Insurance Program (NFIP), enables property owners to purchase flood insurance at rates made reasonable through a Federal subsidy. In return, communities agree to adopt and administer local floodplain management aimed at protecting lives and new construction from future flooding. Section 1315 of the National Flood Insurance Act of 1968, as amended (42 U.S.C. 4022), prohibits flood insurance coverage as authorized under the National Flood Insurance Program (42 U.S.C. 4001–4128) unless an appropriate public body shall have adopted adequate floodplain management measures with effective enforcement measures. The communities listed in this notice no longer meet that statutory requirement for compliance with program regulations (44 CFR part 59 et. seq.). Accordingly, the communities will be suspended on the effective date in the third column. As of that date, flood insurance will no longer be available in the community. However, some of these communities may adopt and submit the required documentation of legally enforceable floodplain management measures after this rule is published but prior to the actual suspension date. These communities will not be suspended and will continue their eligibility for the sale of insurance. A notice withdrawing the suspension of the communities will be published in the **Federal Register.** In the interim, if you wish to determine if a particular community was suspended on the suspension date, contact the appropriate FEMA Regional Office or the NFIP servicing contractor.

In addition, the Federal Emergency Management Agency has identified the special flood hazard areas in these communities by publishing a Flood Hazard Boundary Map. The date of the flood map if one has been published, is indicated in the fourth column of the table. No direct Federal financial assistance (except assistance pursuant to the Disaster Relief Act of 1974 not in connection with a flood) may legally be provided for construction or acquisition of buildings in the identified special flood hazard area of communities not participating in the NFIP and identified for more than a year, on the Federal Emergency Management Agency's initial flood insurance map of the community as having flood-prone areas. (Section 202(a) of the Flood Disaster Protection Act of 1973 (Pub. L. 93–234), as amended). This prohibition against certain types of Federal assistance becomes effective for the communities listed on the date shown in the last column.

The Administrator finds that notice and public procedure under 5 U.S.C. 553(b) are impracticable and unnecessary because communities listed in this final rule have been adequately notified.

Each community receives a 6-month, 90-day, and 30-day notification addressed to the Chief Executive Officer that the community will be suspended unless the required floodplain management measures are met prior to the effective suspension date. For the same reasons, this final rule may take effect within less than 30 days.

Pursuant to the provision of 5 U.S.C. 605(b), the Administrator, Federal Insurance Administration, FEMA, hereby certifies that this rule if promulgated will not have a significant economic impact on a substantial number of small entities. As stated in section 2 of the Flood Disaster Protection Act of 1973, the establishment of local floodplain management together with the availability of flood insurance decreases the economic impact of future flood losses to both the particular community and the nation as a whole. This rule in and of itself does not have a significant economic impact. Any

economic impact results from the community's decision not to (adopt) (enforce) adequate floodplain management, thus placing itself in noncompliance of the Federal standards required for community participation. In each entry, a complete chronology of effective dates appears for each listed community.

List of Subjects in 44 CFR Part 64

Flood insurance—floodplains.

PART 64—[AMENDED]

1. The authority citation for part 64 continues to read as follows:

Authority: 42 U.S.C. 4001 et. seq., Reorganization Plan No. 3 of 1978, E.O. 12127

2. Section 64.6 is amended by adding in alphabetical sequence new entries to the table.

§ 64.6 List of Eligible Communities.

State and location	Community No.	Effective date authorization/cancellation of sale of flood insurance in community	Current effective map date	Date certain Federal assistance no longer available in special flood hazard areas
Regular Program Conversions				
Region I				
Maine:				
Belfast, City of, Waldo County	230129	July 8, 1975, Emerg.; May 3, 1990, Reg.; May 3, 1990, Susp.	5-3-90	May 3, 1990
Blue Hill, Town of, Hancock County	230274	April 1, 1976, Emerg.; May 3, 1990, Reg.; May 3, 1990, Susp.	5-3-90	Do
Carrabassett Valley, Town of, Franklin County	230056	January 30, 1978, Emerg.; May 3, 1990, Reg.; May 3, 1990, Susp.	5-3-90	Do
Clinton, Town of, Kennebec County	230236	April 9, 1985, Emerg.; May 3, 1990, Reg.; May 3, 1990, Susp.	5-3-90	Do
Greene, Town of, Androscoggi County	230475	July 8, 1976, Emerg.; May 3, 1990, Reg.; May 3, 1990, Susp.	5-3-90	Do
Jonesport, Town of, Washington County	230138	August 8, 1975, Emerg.; May 3, 1990, Reg.; May 3, 1990, Susp.	5-3-90	Do
Lincolnville, Town of, Waldo County	230173	October 1, 1975, Emerg.; May 3, 1990, Reg.; May 3, 1990, Susp.	5-3-90	Do
Livermore, Town of, Androscoggi County	230173	August 11, 1976, Emerg.; May 3, 1990, Reg.; May 3, 1990, Susp.	5-3-90	Do
Milbridge, Town of, Washington County	230142	May 14, 1975, Emerg.; May 3, 1990, Reg.; May 3, 1990, Susp.	5-3-90	Do
Winterport, Town of, Waldo County	230271	October 1, 1975, Emerg.; May 3, 1990, Reg.; May 3, 1990, Susp.	5-3-90	Do
New Hampshire:				
Durham, Town of, Strafford County	330146	October 1, 1975, Emerg.; May 3, 1990, Reg.; May 3, 1990, Susp.	5-3-90	Do
Haverhill, Town of, Grafton County	330057	April 5, 1976, Emerg.; May 3, 1990, Reg.; May 3, 1990, Susp.	5-3-90	Do
Region III				
Pennsylvania:				
Heidelberg, Township of, Berks County	421069	March 7, 1977, Emerg.; May 3, 1990, Reg.; May 3, 1990, Susp.	5-3-90	Do
Hereford, Township of, Berks County	421379	November 20, 1975, Emerg.; May 3, 1990, Reg.; May 3, 1990, Susp.	5-3-90	Do
Mount Carmel, Township of, Northumberland County	421942	October 24, 1974, Emerg.; May 3, 1990, Reg.; May 3, 1990, Susp.	5-3-90	Do
Region IV				
Alabama:				
Woodville, Town of, Jackson County	010114	July 26, 1977, Emerg.; May 3, 1990, Reg.; May 3, 1990 Susp.	5-3-90	Do
Jackson County, Unincorporated Areas	010110	May 2, 1975, Emerg.; May 3, 1990, Reg.; May 3, 1990 Susp.	5-3-90	Do
Mississippi:				
DeSoto County, Unincorporated Areas	280050	March 4, 1975, Emerg.; May 3, 1990, Reg.; May 3, 1990, Susp.	5-3-90	Do
Horn Lake, City of, DeSoto County	280051	March 7, 1975, Emerg.; September 17, 1987, Reg.; May 3, 1990, Susp.	5-3-90	Do
Southhaven, Town of, DeSoto County	280331	August 16, 1982, Emerg.; May 3, 1990, Reg.; May 3, 1990, Susp.	5-3-90	Do
Olive Branch, City of, DeSoto County	280286	February 11, 1975, Emerg.; May 3, 1990, Reg.; May 3, 1990, Susp.	5-3-90	Do
Region V				
Minnesota:				
Murray County, Unincorporated Areas	270645	May 24, 1974, Emerg.; May 3, 1990, Reg.; May 3, 1990, Susp.	5-3-90	Do
Pennington County, Unincorporated Areas	270651	June 25, 1974, Emerg.; May 3, 1990, Reg.; May 3, 1990, Susp.	5-3-90	Do.
Thief River Falls, City of, Pennington County	270344	April 23, 1974, Emerg.; July 3, 1985, Reg.; May 3, 1990, Susp.	5-3-90	Do.
Wisconsin: Palmyra, Village of, Jefferson County	550196	May 13, 1975, Emerg.; May 3, 1990, Reg.; May 3, 1990, Susp.	5-3-90	Do

State and location	Community No.	Effective date authorization/cancellation of sale of flood insurance in community	Current effective map date	Date certain Federal assistance no longer available in special flood hazard areas
Region VI				
Louisiana: Beauregard Parish, Unincorporated Areas	220026	September 25, 1979, Emerg., May 3, 1990, Reg.; May 3, 1990, Susp.	5-3-90	Do.

State and location	Community No.	Effective date authorization/cancellation of sale of flood insurance in community	Current effective map date	Date certain Federal assistance no longer available in special flood hazard areas
Region I				
Maine:				
Frankfort, Town of, Waldo County	230254	June 5, 1975, Emerg.; May 17, 1990, Reg.; May 17, 1990, Susp.	5-17-90	May 17, 1990.
Mechanic Falls, Town of, Androscoggin County	230007	May 19, 1975, Emerg.; May 17, 1990, Reg.; May 17, 1990, Susp.	5-17-90	Do.
Minot, Town of, Androscoggin County	230008	June 16, 1976, Emerg.; May 17, 1990, Reg.; May 17, 1990, Susp.	5-17-90	Do.
Peru, Town of, Oxford County	230098	October 24, 1975, Emerg.; May 17, 1990, Reg.; May 17, 1990, Susp.	5-17-90	Do.
Vermont: Newbury, City of, Newport County	445403	June 19, 1970, Emerg.; December 4, 1970, Reg.; May 17, 1990, Susp.	5-17-90	Do.
Rhode Island: Newport, City of, Newport County	445403	June 19, 1990, Emerg.; May 17, 1990, Reg.; May 17, 1990, Susp.	5-17-90	Do.
Region III				
Pennsylvania:				
Benson, Borough of, Somerset County	420793	October 14, 1975, Emerg.; May 17, 1990, Reg.; May 17, 1990, Susp.	5-17-90	Do.
Ogle, Township of, Somerset County	422052	April 23, 1976, Emerg.; May 17, 1990, Reg.; May 17, 1990, Susp.	5-17-90	Do.
Scott, Township of, Lackawanna County	421757	January 19, 1979, Emerg.; May 17, 1990, Reg.; May 17, 1990, Susp.	5-17-90	Do.
Somerset, Township of, Somerset County	422055	July 19, 1976, Emerg.; May 17, 1990, Reg.; May 17, 1990, Susp.	5-17-90	Do.
South Heidelberg, Township of, Berks County	421107	April 4, 1974, Emerg.; May 17, 1990, Reg.; May 17, 1990, Susp.	5-17-90	Do.
West Virginia: Ronceverte, City of, Greenbrier County	540043	March 10, 1975, Emerg.; May 17, 1990, Reg.; May 17, 1990, Susp.	5-17-90	Do.
Virginia: Augusta County, Unincorporated Areas	510013	July 24, 1974, Emerg.; May 17, 1990, Reg.; May 17, 1990, Susp.	5-17-90	Do.
Region IV				
Georgia: Dublin, City of, Laurens County	130217	June 14, 1976, Emerg.; May 17, 1990, Reg.; May 17, 1990, Susp.	5-17-90	Do.
Mississippi:				
Picayune, City of, Pearl River County	280130	May 13, 1974, Emerg., March 4, 1980, Reg.; May 17, 1990, Susp.	5-17-90	Do.
Pearl River County, Unincorporated Areas	280129	October 16, 1979, Emerg.; October 16, 1979, Reg.; May 17, 1990, Susp.	5-17-90	Do.
Region V				
Ohio: Hamden, Village of, Vinton County	390554	August 13, 1979, Emerg.; September 29, 1989, Reg.; May 17, 1990, Susp.	9-29-89	Do.
Michigan: Armada, Village of, Macomb County	260742	November 7, 1983, Emerg.; May 17, 1990, Reg.; May 17, 1990, Susp.	5-17-90	Do.
Ohio:				
Aurora, City of, Portage County	390454	June 27, 1975, Emerg.; May 17, 1990, Reg.; May 17, 1990, Susp.	5-17-90	Do.
Reminderville, Village of, Summit County	390855	July 9, 1980, Emerg.; May 17, 1990, Reg., May 17, 1990, Susp.	5-17-90	Do.
Seneca County, Unincorporated Areas	390779	April 3, 1979, Emerg., May 17, 1990, Reg., May 17, 1990, Susp.	5-17-90	Do.
Region VII				
South Dakota: Lawrence County, Unincorporated Areas	460094	April 30, 1974, Emerg., May 17, 1990, Reg., May 17, 1990, Susp.	5-17-90	Do.

Code for reading third column: Emerg.—Emergency; Reg.—Regular; Susp.—Suspension.

Issued: April 19, 1990.

Harold T. Duryee,

Administrator, Federal Insurance Administration.

[FR Doc. 90-10058 Filed 5-1-90; 8:45 am]

BILLING CODE 6718-21-M

FEDERAL COMMUNICATIONS COMMISSION

47 CFR Part 15

[GEN Docket No. 87-389; FCC 90-143]

Operation of Radio Frequency Devices Without an Individual License

AGENCY: Federal Communications Commission.

ACTION: Final rule; petitions for reconsideration.

SUMMARY: This action responds to petitions for reconsideration of the *First Report and Order* in GEN Docket No. 87-389, 54 FR 17710, April 25, 1989, filed by Control Data Canada, Ltd. (CDC) and Hewlett-Packard Company Medical Products Group (HP). Both petitioners object to the Commission's decision to prohibit the operation of new types of devices in the frequency bands allocated to television (TV) broadcast stations and request clarifications of certain part 15 rules. In response, the Commission is denying the changes to the regulations requested by CDC due to the potential increase in interference to television reception that could result. However, we are granting the change to the rules requested by HP as it appears that granting their request would not result in an increase in potential interference.

EFFECTIVE DATE: May 2, 1990.

ADDRESSES: Federal Communications Commission, 1919 M Street NW., Washington, DC 20554.

FOR FURTHER INFORMATION CONTACT: John A. Reed, Office of Engineering and Technology, (202) 653-7313.

SUPPLEMENTARY INFORMATION: This is a summary of the Commission's *Memorandum, Opinion and Order* in Gen. Docket No. 87-389, FCC 90-143, adopted April 12, 1990 and released April 25, 1990.

The full text of this Commission decision is available for inspection and copying during normal business hours in the FCC Dockets Branch (room 230), 1919 M Street NW., Washington, DC. The complete text of this decision also may be purchased from the Commission's copy contractor, International Transcription Service, (202) 857-3800, 2100 M Street NW., suite 140, Washington, DC 20037.

Summary of the Memorandum, Opinion and Order

1. In the *First Report and Order* in this proceeding, the Commission adopted a comprehensive revision of part 15 of its rules governing the operation of radio frequency devices without an individual license. That action provided additional technical and operational flexibility in the design, manufacture and use of non-licensed devices. In taking this step, the Commission recognized the intensive use that future High Definition Television (HDTV) may place on the bands allocated to TV broadcast stations. Thus, the Commission prohibited new types of part 15 devices from access to this spectrum. CDC and HP filed petitions requesting limited exemptions to the prohibitions on operation of new types of non-licensed RF devices in the TV bands.

2. In its petition, CDC, a manufacturer of perimeter protection systems, requests that the Commission: (1) Permit perimeter protection systems operating in the 54-72 MHz and 76-88 MHz bands to be used in residential applications when the residence is an "estate", defined by CDC as residences of two or more acres; (2) provide delegated authority to the staff to exempt particular devices from the requirement that each installation site be tested to demonstrate compliance with the standards; (3) clarify that all perimeter protection systems may use multiple transmitters that comply with the emission limits and that the emissions from these transmitters may be measured at a distance of 30 meters, even if that distance is outside of the property boundary; and, (4) clarify the definition of perimeter protection systems to permit the use of any type of radio frequency transmission lines instead of only "leaky cables."

3. In regard to its first request, CDC claims that use of perimeter protection systems on residential "estates" would not result in interference to TV reception due to the large separation distance from a neighbor's TV receiving system and the extensive use of cable and satellite TV reception systems in "estate" residences. The Commission disagrees. Limiting perimeter protection systems to "estate" residences would not ensure any minimum separation distance between the perimeter protection system and the television antenna receiving system of nearby residences. We also observe that many "estate" residences do in fact rely on the reception of over-the-air transmissions. In view of these concerns, we are denying CDC's request to permit operation of perimeter protection systems on residential "estates."

4. The Commission finds CDC's request to establish a procedure for exempting particular systems from individual site testing to be beyond the scope of issues that can be addressed through reconsideration of the *First Report and Order*. Further, we observe that, in any event, CDC has provided no justification or other analysis to support such a change. We note that site testing of perimeter protection systems is necessary because the levels of emissions from these systems are affected significantly by the characteristics of the site of installation. Thus, we are denying this request.

5. The Commission is providing the clarifications requested by CDC. Perimeter protection systems may employ multiple transmitters provided the system, as installed and tested, complies with the emission limits. Compliance may be demonstrated at a test distance of 30 meters, regardless of whether those measurements are performed beyond or within the boundary of the property on which the equipment is installed. Further, the provision in the definition of a perimeter protection system in §15.3(q) which specifies the use of "leaky cables" does not preclude the use of any type of RF transmission line, defined as a conductor or series of conductors designed to carry electrical energy from a source to a load. We are amending the rules to reflect this interpretation.

6. HP requests that the Commission permit the operation of biomedical telemetry transmitters on TV channels 21-29 (512-566 MHz). It stated that the additional shielding provided by the hospital and the low signal strength of these devices are sufficient to ensure little likelihood of interference to existing TV reception or to future HDTV reception. We agree and are amending the rules to permit the operation of biomedical telemetry devices on TV channels 21-29.

7. HP also requests clarification that new designs of biomedical telemetry transmitters can be operated under the higher field strength limits in the band 174-216 MHz (TV channels 7-13), as permitted under the previous rules. We agree that new designs of these devices can in fact be operated under the provisions of § 15.241. The prohibition in § 15.209 against operation in the TV broadcast bands applies only to devices operated under the provision of that rule section. This prohibition does not apply to devices operated under other rules sections, e.g., §§ 15.231 and 15.241.

8. In accordance with the above discussion and pursuant to the authority contained in sections 4(i), 301, 302, 303, 304 and 307 of the Communications Act of 1934, as amended, *It is Ordered That* the Petition for Reconsideration and Clarification filed by Control Data Canada, Ltd. and the Petition for Reconsideration filed by Hewlett-Packard Company Medical Products Group are granted to the extent indicated herein and in all other respects are denied. In addition, *It is Ordered That* part 15 of the Commission's Rules and Regulations is amended as set forth below. These rules and regulations are effective upon publication in the **Federal Register**.

List of Subjects in 47 CFR Part 15

Communications equipment, radio.

Rule Changes

Title 47 of the Code of Federal Regulations, part 15, is amended as follows:

PART 15—[AMENDED]

1. The authority citation for part 15 continues to read as follows:

Authority: Sec. 4, 302, 303, 304, and 307 of the Communications Act of 1934, as amended, 47 U.S.C. Sections 154, 302, 303, 304, and 307.

2. Section 15.3 is amended by revising paragraph (q) to read as follows:

§ 15.3 Definitions.

* * * * *

(q) *Perimeter protection system.* A field disturbance sensor that employs RF transmission lines as the radiating source. These RF transmission lines are installed in such a manner that allows the system to detect movement within the protected area.

* * * * *

3. Section 15.209 is amended by revising paragraph (g) to read as follows:

§ 15.209 Radiated emission limits, general requirements.

* * * * *

(g) Operation in the frequency bands allocated to TV broadcast stations:

(1) Perimeter protection systems operating under the provisions of this section in the frequency bands allocated to TV broadcast stations, as shown in part 73 of this Chapter, shall contain their fundamental emissions within the frequency bands 54–72 MHz and 76–88 MHz. Further, the use of such perimeter protection systems is limited to industrial, business and commercial applications.

(2) Biomedical telemetry devices operating under the provisions of this section in the frequency bands allocated to TV broadcast stations, as shown in part 73 of this Chapter, shall contain their fundamental emissions within the frequency band 512–566 MHz. Further, the marketing and the use of biomedical telemetry devices operating under this paragraph shall be limited to hospitals.

Federal Communications Commission.

Donna R. Searcy,

Secretary.

[FR Doc. 90-10126 Filed 5-1-90; 8:45 am]

BILLING CODE 6712-01-M

ENVIRONMENTAL PROTECTION AGENCY

48 CFR Part 1501

[FRL-3761-7]

Acquisition Regulation; Ratification of Unauthorized Commitments

AGENCY: Environmental Protection Agency.

ACTION: Final rule.

SUMMARY: This action amends the Environmental Protection Agency (EPA) Acquisition Regulation (EPAAR) coverage on the ratification of unauthorized commitments. The effect of this action is to delete EPAAR coverage that is duplicative of the FAR and to revise the EPAAR policies and procedures on unauthorized commitments.

EFFECTIVE DATE: May 2, 1990.

FOR FURTHER INFORMATION CONTACT: Environmental Protection Agency, Procurement and Contracts Management Division (PM-214), 401 M Street SW., Washington, DC 20460, attn: Paul Schaffer, telephone (202) 382-5032.

SUPPLEMENTARY INFORMATION:

A. Background

On February 22, 1988, the FAR was amended by FAC 84-33, which added regulatory coverage on the ratification of unauthorized commitments. This final rule deletes duplicative coverage in the EPAAR and further amends the EPAAR to clarify and strengthen controls over unauthorized commitments.

B. Executive Order 12291

OMB Bulletin No. 85-7, dated December 14, 1984, establishes the requirements for the Office of Management and Budget (OMB) review of agency procurement regulations. This regulation does not fall within any of the categories cited in the Bulletin requiring OMB review.

C. Paperwork Reduction Act

The Paperwork Reduction Act does not apply because this rule does not contain any information collection requirements which would require the approval of OMB under 44 U.S.C. 3501, et seq.

D. Regulatory Flexibility Act

The EPA certifies this rule does not exert a significant economic impact on a substantial number of small entities. The rule merely deletes existing material from the EPAAR that is duplicative of FAR coverage and strengthens controls to reduce the occurrences of unauthorized commitments.

E. Public Comments

The EPA published a notice of proposed rulemaking detailing these changes in the **Federal Register** on December 11, 1989. No comments were received.

List of Subjects in 48 CFR Part 1501

Government procurement, Contracting authority and responsibilities.

For the reasons set out in the preamble, chapter 15 of title 48 Code of Federal Regulations is amended as follows:

PART 1501—[AMENDED]

1. The authority citation for part 1501 continues to read as follows:

Authority: Sec. 205(c), 63 Stat. 390, as amended, 40 U.S.C. 486(c).

2. Subpart 1501.6 is amended by adding section 1501.602-3 to read as follows:

1501.602-3. Ratification of unauthorized commitments.

(a) *Definition.* "Unauthorized commitment," as used in this subpart, means an agreement that is not binding solely because the Government representative who made it lacked the authority to enter into that agreement on behalf of the Government. The term does not relate to the Agency process for the reservation of funds.

(b) *Applicability.* The provisions of this section apply to all unauthorized commitments, whether oral or written and without regard to dollar value. Examples of unauthorized commitments are;

(1) Ordering supplies or services by an individual without contracting authority;

(2) Unauthorized direction of work through assignment of orders or tasks;

(3) Unauthorized addition of new work;

(4) Unauthorized direction of contractors to subcontract with particular firms; or

(5) Any other unauthorized direction which changed the terms and conditions of the contract.

(c) *Ratification approvals and concurrences.* (1) The Chief of the Contracting Office is the ratifying official, provided that he/she has redelegable contracting authority.

(2) For ratification actions which arise in regional offices or laboratory sites, the Chief of the Contracting Office to whom the activity functionally reports is the ratifying official, provided that he/she has redelegable authority. The responsible Procurement and Contracts Management Division (PCMD) Associate Director is the ratifying official for actions which arise in regional or laboratory sites which do not functionally report to a contracting officer.

(3) All proposed ratification actions of $250,000 or more for which the responsible PCMD Associate Director is not the ratifying official shall be forwarded for review to the responsible PCMD Associate Director prior to approval by the ratifying official.

(d) *Procedures.* (1) The program office shall notify the cognizant contracting office by memorandum of the circumstances surrounding an unauthorized commitment. The notification shall include:

(i) All relevant documents and records;

(ii) Documentation of the necessity for the work and benefit derived by the Government;

(iii) A statement of the delivery status of the supplies or services associated with the unauthorized commitment;

(iv) A list of the procurement sources solicited (if any) and the rationale for the source selected;

(v) If only one source was solicited, a justification for other than full and open competition (JOFOC) as required by FAR 6.302, FAR 6.303, and 1506.303, or for small purchases exceeding the competition threshold in FAR 13.106, a sole source justification as required by 1513.170;

(vi) A statement of steps taken or proposed to prevent reoccurrence of any unauthorized commitment.

(2) The Division Director (or equivalent) of the responsible office shall approve the memorandum. If expenditure of funds is involved, the program office shall include a Procurement Request/Order, EPA Form 1900–8, with funding sufficient to cover the action. The appropriation data cited on the 1900–8 shall be valid for the period in which the unauthorized commitment was made.

(3) Upon receiving the notification, the Contracting Officer shall prepare a determination and findings regarding ratification of the unauthorized commitment for the ratifying official. The determination and findings shall include sufficient detail to support the recommended action. If ratification of the unauthorized commitment is recommended, the determination and findings shall include a determination that the price is fair and reasonable. To document the determination, additional information may be required from the Contractor. Concurrence by the Office of General Counsel is not mandatory, but shall be sought in difficult or unusual cases.

(4) The ratifying official may inform the Inspector General (IG) of the action by memorandum through the Head of the Contracting Activity (HCA). For ratification actions exceeding the small purchase limitation, the ratifying official shall submit a memorandum to the Assistant Administrator for Administration and Resources Management through the HCA for transmittal to the Assistant, Associate, or Regional Administrator (or equivalent level) of the person responsible for the unauthorized commitment. This memorandum should contain a brief description of the circumstances surrounding the unauthorized commitment, recommend corrective action, and include a copy of any memorandum sent to the IG. Submission of a memorandum to the appropriate Assistant, Associate, or Regional Administrator for unauthorized commitments at or below the small purchase limitation is optional and may be accomplished at the discretion of the ratifying official.

(e) *Paid Advertisements.* (1) EPA is generally not authorized to ratify improperly ordered paid advertisements. The ratifying official, however, may determine payment is proper subject to the limitations in FAR 1.602–3(c) if the individual responsible for the unauthorized commitment acted in good faith to comply with Agency acquisition policies and procedures.

(2) The paying office shall forward invoice claims received in its office for improper paid advertisements to the cognizant ratifying official for a determination regarding ratification of the action.

(3) If the ratifying official determines that an unauthorized commitment cannot be ratified by the Agency, the ratifying official shall instruct the submitter to present its claim to the General Accounting Office in accordance with the instructions contained in 4 CFR part 31, Claims Against the United States, General Procedures.

(f) *Payment of Properly Ratified Claims.* After the unauthorized commitment is ratified, the Contractor must submit an invoice (or resubmit an invoice if one was previously submitted) citing the appropriate contract or purchase order number.

1501.670 [Removed]

3. Subpart 1501.6 is amended by removing section 1501.670.

Dated: April 10, 1990.

John C. Chamberlin,

Director, Office of Administration.

[FR Doc. 90–10195 Filed 5–1–90; 8:45 am]

BILLING CODE 6560–50–M

Proposed Rules

Federal Register
Vol. 55, No. 85
Wednesday, May 2, 1990

This section of the FEDERAL REGISTER contains notices to the public of the proposed issuance of rules and regulations. The purpose of these notices is to give interested persons an opportunity to participate in the rule making prior to the adoption of the final rules.

DEPARTMENT OF AGRICULTURE

Animal and Plant Health Inspection Service

7 CFR Part 301

[Docket No. 90-061]

Citrus Canker Regulations

AGENCY: Animal and Plant Health Inspection Service, USDA.

ACTION: Notice of public hearing.

SUMMARY: In response to a request from the California Department of Food and Agriculture, we are holding a public hearing in Ontario, California, on May 15, 1990, on a proposed rule to amend the citrus canker regulations. This public hearing will be in addition to the previously scheduled public hearing in Palmetto, Florida, on April 25, 1990. The proposed rule would amend the citrus canker regulations by removing all regulations related to what has been called the Florida nursery strain of citrus canker, and by reducing the quarantined area of Florida to a portion of Manatee County where there have been infestations caused by the Asiatic strains of citrus canker. The proposed rule was published in the Federal Register on March 27, 1990.

DATES: Consideration will be given only to comments received on or before May 29, 1990. The public hearing will be held on May 15, 1990, in Ontario, California.

ADDRESSES: To help ensure that your written comments are considered, send an original and three copies to Chief, Regulatory Analysis and Development, PPD, APHIS, USDA, room 866, Federal Building, 6505 Belcrest Road, Hyattsville, MD 20782. Please state that your comments refer to Docket 89-040. Comments we receive, including transcripts of the public hearings, may be inspected at USDA, Room 1141, South Building, 14th Street and Independence Avenue, SW., Washington, DC., between 8 a.m. and 4:30 p.m., Monday through Friday, except holidays. The public hearing on May 15, 1990, will be held at the Holiday Inn Ontario Airport, Vineyard Room, 1801 East G Street, Ontario, California 91764.

FOR FURTHER INFORMATION CONTACT: Eddie W. Elder, Chief Operations Officer, Domestic and Emergency Operations, PPQ, APHIS, USDA, room 661, Federal Building, 6505 Belcrest Road, Hyattsville, MD 20782, 436-6365.

SUPPLEMENTARY INFORMATION:

Background

Regulations to prevent the interstate spread of citrus canker are contained in 7 CFR 301.75 through 301.75-16, "Subpart—Citrus Canker." In a document published in the Federal Register on March 27, 1990 (55 FR 11209-11220, Docket No. 89-040) we proposed to amend the citrus canker regulations by removing all regulations related to the Florida nursery strain of citrus canker and by reducing the area of Florida quarantined for citrus canker to a portion of Manatee County where there have been infestations caused by the Asiatic strains of citrus canker. Designation of less than the entire State as a quarantined area would be contingent upon certain requirements being met concerning inspections, and upon Florida enforcing certain restrictions on the intrastate movement of regulated articles from the quarantined area. These actions would relieve restrictions on the interstate movement of citrus and certain other plants, fruit, seeds, and other regulated articles from all areas of Florida except for part of Manatee County.

We also proposed to place some additional restrictons on the interstate movement of regulated articles from and through the proposed quarantined area, to prevent the interstate spread of citrus canker. In addition, we proposed to remove the "household" restriction on regulated fruit moved interstate from groves of fewer than 10 trees.

The proposed rule solicited comments from the public for 60 days, ending May 29, 1990. In addition, we announced that a public hearing on the proposed rule would be held in Palmetto, Florida, on April 25, 1990. In response to a request from the California Department of Food and Agriculture, we are scheduling an additional public hearing to be held in Ontario, California, on May 15, 1990.

Public Hearing

A representative of the Animal and Plant Health Inspection Service (APHIS) will preside at the public hearing. Any interested person may appear and be heard in person, by attorney, or by other representative.

The public hearing will begin at 10 a.m. and is scheduled to end at 5 p.m., local time. However, the hearing may be terminated at any time after it begins if all persons desiring to speak have been heard. We request that all persons attending the public hearing register with the presiding officer, and fill out a speakers' registration card on the morning of the hearing between 9 a.m. and 10 a.m., at the hearing room, if they wish to speak. Registered speakers will be heard in the order of their registration. Anyone else who wishes to speak at the hearing will be heard after the registered speakers. We ask that anyone who reads a statement provide two copies to the presiding officer at the hearing.

If the number of registered speakers and other participants at the hearing warrants it, the presiding officer may limit the time for each presentation so that everyone wishing to speak has the opportunity.

The purpose of the hearing is to give interested persons an opportunity for oral presentation of data, views, and arguments.

Authority: U.S.C. 150bb, 150dd, 150ee, 150ff, 161, 162, and 164-167; 7 CFR 2.17, 2.51, and 371.2(c).

Done in Washington, DC, this 26th day of April 1990.

James W. Glosser,

Administrator, Animal and Plant Health Inspection Service.

[FR Doc. 90-10177 Filed 5-1-90; 8:45 am]

BILLING CODE 3410-34-M

9 CFR Part 94

[Docket No. 85-095]

Importation of Fresh, Chilled, and Frozen Meat and Milk and Milk Products

AGENCY: Animal and Plant Health Inspection Service, USDA.

ACTION: Proposed rule.

SUMMARY: We are proposing to amend the regulations governing the

importation of fresh, chilled, and frozen meat, and milk and milk products, that are from ruminants and swine and that originate in countries free of rinderpest and foot-and-mouth disease but enter a port or otherwise transit a country where rinderpest or foot-and-mouth disease exists en route to the United States. The proposal would allow officials to seal the container, rather than the entire hold or compartment of a carrier, if the meat to be imported is containerized. The proposal would also allow these meat, milk and milk products, which must be shipped under seal, to remain eligible for entry into the United States under certain circumstances, even if the seal is broken or has a different number than is recorded on the documents accompanying the meat, milk, or milk products. These amendments would relieve restrictions that do not appear necessary to prevent the introduction of rinderpest or foot-and-mouth disease into the United States.

DATES: Consideration will be given only to comments received on or before July 2, 1990.

ADDRESSES: To help ensure that your written comments are considered, send an original and three copies to Chief, Regulatory Analysis and Development, PPD, APHIS, USDA, room 866, Federal Building, 6505 Belcrest Road, Hyattsville, MD 20782. Please state that your comments refer to Docket No. 85–095. Comments received may be inspected at room 1141, South Building, 14th Street and Independence Avenue SW., Washington, DC, between 8 a.m. and 4:30 p.m., Monday through Friday, except holidays.

FOR FURTHER INFORMATION CONTACT: Dr. Richard R. Bowen, Import Export Products Staff, VS, APHIS, USDA, room 756, Federal Building, 6505 Belcrest Road, Hyattsville, MD 20782, 301–436–7834.

SUPPLEMENTARY INFORMATION:

Background

The regulations in 9 CFR part 94 (the regulations), govern the importation into the United States of animal products. With some exceptions, the regulations prohibit the importation of ruminants and swine, and milk, milk products, and fresh, chilled, and frozen meat of ruminants and swine, that originate in or are shipped from a country where rinderpest or foot-and-mouth disease (FMD) exists or that enter a port in or otherwise transit such a country. However, the regulations allow the importation, under certain conditions, of fresh, chilled, and frozen meat of ruminants or swine raised and slaughtered in a country free of rinderpest and foot-and-mouth disease, even if the meat enters a port or otherwise transits a country where rinderpest or FMD does exist. Likewise, the regulations allow the importation, under certain conditions, of milk and milk products that originate in and are shipped from countries free of rinderpest and FMD, but that enter a port or otherwise transit a country where one of these diseases exists.

Location of the Seal

For meat, one of these conditions for importation is that the meat must be placed in the transporting carrier in a hold or compartment that was sealed in the country of origin by an official of that country with serially numbered seals approved by the Animal and Plant Health Inspection Service (APHIS). The seals are intended to prevent the meat from being contaminated when the carrier travels through a country where either rinderpest or FMD exists, and to prevent cargo from being loaded into or removed from the hold or compartment until the meat arrives in the United States. The regulations also require that when the carrier arrives at the port of entry in the United States, an APHIS representative must find that the seals are intact and do not appear to have been tampered with.

At the time these provisions were adopted, meat was shipped without containers or other bulk packaging. Hanging sides or quarters of meat were loaded directly into the hold or compartment of the transporting carrier.

Today, the method of shipping meat is different. Though some meat is still shipped as hanging sides or quarters, most meat is shipped in containers. This is referred to as "containerized shipping," and it is the most common method of shipping meat. It is economical and efficient. Individually refrigerated containers, that resemble tractor-trailers without the cab or wheels, are packed with boxes and other packages of meat, and are then loaded aboard the transporting carrier. Containers can be stacked on top of one another and placed end-to-end and side-by-side, efficiently utilizing the available space. On board ships, containers can be loaded either in the hold or on the deck, depending on the type of vessel. Containers holding different types of products can be loaded aboard the same carrier without risk of contamination. Because each container is an individually sealed unit, the contents of one container have no contact with the contents of any other container When the carrier arrives at the port, the loaded containers are removed. They are placed directly on railroad cars or tractor-trailers and moved from the port. The contents are not removed from them until they arrive at their final destinations.

If meat is containerized, sealing the entire hold or compartment of a transporting carrier would not be necessary. Sealing the individual containers would prevent the meat from being contaminated just as effectively. In addition, if containers of meat are loaded on the deck of a ship, there is no hold or compartment to seal.

Therefore, we are proposing to amend the regulations to provide, as an alternative to the existing requirement that the hold or compartment of the transporting carrier be sealed, that, if the meat is containerized, the individual containers be sealed.

Condition of the Seal Upon Arrival in the U.S.

The regulations also require that the seal applied to shipments of meat in the country of origin be serially numbered, and that the seal number be recorded on the foreign meat inspection certificate that accompanies the meat to the United States. Further, the regulations state that the meat may not be imported into the United States unless, when the carrier arrives at the United States port of entry, the seal is intact and there is no evidence that it has been tampered with. The regulations contain similar requirements for shipments of milk and milk products. These provisions ensure that meat, milk, and milk products originating in a country free of rinderpest or FMD are protected from contamination if, during shipment to the United States, they transit a country where either of these diseases exists.

Nearly all shipments of fresh, chilled, and frozen meat from ruminants and swine, and milk and milk products, that originate in countries free of rinderpest and FMD arrive in the United States with the original seals intact. However, a small portion of these shipments do arrive with broken seals or seals that have a different number than is recorded on the documents accompanying the shipments. One reason for this is that foreign officials break some seals to make sure the products under seal match what is listed on the shipping manifest, or to check for contraband. They then apply a new seal with a different number. Another reason is that ship's personnel must sometimes break seals, to repair broken refrigeration systems, for instance, or for other legitimate reasons. When seals are broken or replaced for these reasons, the meat, milk, or milk products are not

likely to be contaminated by disease agents. Therefore, we propose to allow these products to remain eligible for entry, provided the following conditions are met:

First, to provide a means of identifying those seals broken or replaced under the circumstances described above, we propose to require the following: If foreign officials break seal applied in the country of origin, they must reseal the hold, compartment, or container with a new serially numbered seal; and, if any member of a ship's crew breaks a seal, the serial number of the seal, the location of the seal, and the reason for breaking the seal must be recorded in the ship's log.

Then, if shipments of meat, milk, or milk products arrive in the United States with seal that has been broken or has a different number than is recorded on the documents accompanying the shipment, the products may remain eligible for entry into the United States only if: (1) APHIS personnel are available to inspect the hold, compartment, or container in which the meat, milk, or milk products were shipped, as well as the container, the packages of meat, or cartons or other containers of milk or milk products, and all accompanying documentation; and (2) the importer furnishes APHIS with additional documentation (either copies of pages from the ship's log signed by the officer-in-charge, or certification from a foreign government that the original seal was removed and the new seal applied by officials of that government) that demonstrates to the satisfaction of the Administrator that the meat, milk, or milk products were not contaminated or exposed to contamination during movement from the country of origin to the United States. This combination of documentation and inspection would allow APHIS to verify the circumstances under which a seal was broken or replaced, and provide adequate assurance that the meat, milk, or milk products were not contaminated or exposed to contamination during shipment to the United States.

Paperwork Reduction Act

In accordance with section 3507 of the Paperwork Reduction Act of 1980 (44 U.S.C. chapter 35), the information collection provisions that are included in this proposed rule have been submitted for approval to the Office of Management and Budget. Your written comments will be considered if you submit them to the Office of Information and Regulatory Affairs, OMB, Attention: Desk Officer for APHIS, Washington, DC 20503. You should submit a duplicate copy of your comments to the Chief, Regulatory Analysis and Development, PPD, APHIS, USDA, Room 866, Federal Building, 6505 Belcrest Road, Hyattsville, MD 20782.

Executive Order 12291 and Regulatory Flexibility Act

We are issuing this proposed rule in conformance with Executive Order 12291, and we have determined that it is not a "major rule." Based on information compiled by the Department, we have determined that this proposed rule, if adopted, would have an effect on the economy of less than $100 million; would not cause a major increase in costs or prices for consumers, individual industries, Federal, State, or local government agencies, or geographic regions; and would not have a significant effect on competition, employment, investment, productivity, innovation, or on the ability of United States-based enterprises to compete with foreign-based enterprises in domestic or export markets.

Our proposal to allow certain shipments of meat, milk and milk products to remain eligible for entry into the United States even though they arrive in a container with a seal that has been broken or changed could result in economic benefit to some importers. However, the volume of meat, milk and milk products affected by this change is unlikely to be more than a small percentage of any importer's goods. Further, based on the size of these shipments (40,000 to 45,000 pounds per container), it appears that few, if any, of the potentially affected importers are small entities.

Under these circumstances, the Administrator of the Animal and Plant Health Inspection Service has determined that this action would not have a significant economic impact on a substantial number of small entities.

Executive Order 12372

This program/activity is listed in the Catalog of Federal Domestic Assistance under No. 10.025 and is subject to Executive Order 12372, which requires intergovernmental consultation with State and local officials. (See 7 CFR part 3015, subpart V.)

List of Subjects in 9 CFR Part 94

African swine fever, Animal diseases, Exotic Newcastle disease, Foot-and-mouth disease, Fowl pest, Garbage, Hog cholera, Imports, Livestock and livestock products, Meat and meat products, Milk, Poultry and poultry products, Rinderpest, Swine vesicular disease.

Accordingly, the regulations in 9 CFR part 94 would be amended as follows:

PART 94—RINDERPEST, FOOT-AND-MOUTH DISEASE, FOWL PEST (FOWL PLAGUE), NEWCASTLE DISEASE (AVIAN PNEUMOENCEPHALITIS), AFRICAN SWINE FEVER, AND HOG CHOLERA: PROHIBITED AND RESTRICTED IMPORTATIONS

1. The authority citation for part 94 would continue to read as follows:

Authority: 7 U.S.C. 147a, 150ee, 161, 162, 450; 19 U.S.C. 1306; 21 U.S.C. 111, 114a, 134a, 134b, 134c, and 134f; 42 U.S.C. 4331, 4332; 7 CFR 2.17, 2.51, and 371.2(d).

2. In § 94.0, a definition of "Container" would be added, in alphabetical order, to read as follows:

§ 94.0 [Amended]

* * * * *

Container. For the purpose of § 94.1(c) and § 94.16(c), this term means a receptacle, sometimes refrigerated, which is designed to be filled with cargo, sealed, and then moved, without unsealing or unloading, aboard a variety of different transporting carriers.

* * * * *

§ 94.1 [Amended]

3. In § 94.1(c), the introductory text would be amended by removing the word "if" before the colon and adding in its place the phrase "provided that all of the following conditions are met".

4. In § 94.1, paragraph (c)(2) would be amended by removing the words "hold or compartment which" and adding the words "hold, compartment, or, if the meat is containerized, in a container that" in their place; by removing the words "after the hold or compartment" and adding the words "after the hold, compartment, or container" in their place; and by removing the words "such sealed hold or compartment," and adding the words "the sealed hold, compartment, or container," in their place.

5. In § 94.1, paragraphs (c) (3), (4), and (5) would be redesignated as paragraphs (c)(4), (5), and (6), and a new paragraph (c)(3) would be added to read as follows:

* * * * *

(c) * * *

(3) If any foreign official breaks a seal applied in the country of origin in order to inspect the meat, he or she then reseals the hold, compartment, or container with a new serially numbered seal; and, if any member of a ship's crew breaks a seal, the serial number of the seal, the location of the seal, and the

reason for breaking the seal are recorded in the ship's log.

* * * * *

6. In § 94.1(c), redesignated paragraph (c)(4) would be amended by removing the words "hold or compartment of the transporting carrier" and adding "hold, compartment, or container" in their place.

7. In § 94.1(c), redesignated paragraph (c)(5) would be revised to read as follows:

* * * * *

(c) * * *

(5) Upon arrival of the carrier in the United States port of arrival, the seals are found by an APHIS representative to be intact, and the representative finds that there is no evidence indicating that any seal has been tampered with; *provided that*, if the representative finds that any seal has been broken or has a different number than is recorded on the foreign meat inspection certificate, then the meat may remain eligible for entry into the United States only if APHIS personnel are available to inspect the hold, compartment, or container, the packages of meat, and all accompanying documentation; and the importer furnishes additional documentation (either copies of pages from the ship's log signed by the officer-in-charge, or certification from a foreign government that the original seal was removed and the new seal applied by officials of that government) that demonstrates to the satisfaction of the Administrator that the meat was not contaminated or exposed to contamination during movement from the country of origin to the United States; and

* * * * *

§ 94.16 [Amended]

8. In § 94.16, paragraph (c)(1) would be amended by changing the period to a semicolon and adding a phrase to read as follows:

* * * * *

(c) * * *

(1) * * *; except that, if any seal applied at the point of origin was broken by any foreign official to inspect the shipment, an authorized representative of that country applied a new serially numbered official seal to the hold, compartment, or container in which the milk or milk products were transported; and if any member of a ship's crew broke a seal, the serial number of the seal, the location of the seal, and the reason for breaking the seal were recorded in the ship's log.

* * * * *

9. In § 94.16, paragraph (c)(3) would be amended by changing the period to a semicolon and adding a phrase to read as follows:

* * * * *

(c) * * *

(3) * * *; *provided that*, if the representative finds that any seal has been broken or has a different number than is recorded on the accompanying document, then the milk or milk products may remain eligible for entry into the United States only if APHIS personnel are available to inspect the hold, compartment, or container, the cartons or other containers of milk or milk products, and all accompanying documentation; and the importer furnishes additional documentation (either copies of pages from the ship's log signed by the officer-in-charge, or certification from a foreign government that the original seal was removed and the new seal applied by the officials of that government) that demonstrates to the satisfaction of the Administrator that the milk or milk products were not contaminated or exposed to contamination during movement from the country of origin to the United States.

Done in Washington, DC, this 26th day of April 1990.

James W. Glosser,

Administrator, Animal and Plant Health Inspection Service.

[FR Doc. 90-10176 Filed 5-1-90; 8:45 am]

BILLING CODE 3410-34-M

---

9 CFR Part 114

[Docket No. 89-221]

Viruses, Serums, Toxins, and Analogous Products; Shipment of Certain Exempted Products

AGENCY: Animal and Plant Health Inspection Service, USDA.

ACTION: Proposed rule.

SUMMARY: This document proposes to amend the regulations regarding biological products, prepared for intrastate distribution or export, which were exempted by the 1985 amendments to the Virus-Serum-Toxin Act from the requirement that such products be prepared under a USDA license. The purpose of such exemptions was to allow intrastate producers sufficient time to phase into the USDA licensing system. We are proposing that shipment of such products would not be allowed after midnight December 31, 1990. Products produced under an exemption which had been extended would not be affected by this action.

The intent of the proposed amendment is to effectuate the purposes of the Act in light of the statutorily authorized phase-in period for regulation of these products.

DATES: Consideration will be given only to comments received on or before June 1, 1990.

ADDRESSES: Send an original and three copies of written comments to Chief, Regulatory Analysis and Development Staff, APHIS, USDA, Room 866, Federal Building, 6505 Belcrest Road, Hyattsville, MD 20782. Please state that your comments refer to Docket No. 89-221. Comments received may be inspected at USDA, Room 1141, South Building, 14th and Independence Avenue SW., Washington, DC, between 8 a.m. and 4:30 p.m., Monday through Friday, except holidays.

FOR FURTHER INFORMATION CONTACT: Dr. David A. Espeseth, Deputy Director, Veterinary Biologics; Biotechnology, Biologics, and Environmental Protection, Animal and Plant Health Inspection Service, U.S. Department of Agriculture, room 838, Federal Building, 6505 Belcrest Road, Hyattsville, MD 20782, (301) 436-8245.

SUPPLEMENTARY INFORMATION:

Background

The Virus-Serum-Toxin Act of 1913 (21 U.S.C. 151-159) (Act), as amended by the Food Security Act of December 23, 1985, makes it unlawful for any person, other than one exempted by statute, to ship a veterinary biological product anywhere in or from the United States, unless that product was prepared under and in compliance with regulations prescribed by the Secretary of Agriculture in an establishment licensed by the Secretary. The Act further provides that veterinary biological products, prepared solely for intrastate distribution or for export, during the 12 month period ending on the date of enactment of the 1985 amendments, would not be in violation of the Act because they were not prepared pursuant to a license, until January 1, 1990. Persons desiring to prepare products under this exemption were required to claim the exemption by January 1, 1987.

Thus, the 1985 amendments to the Virus-Serum-Toxin Act provided a 4-year grace period during which manufacturers of unlicensed products could continue to produce products solely for intrastate distribution or export. The purpose of the grace period was to allow intrastate producers sufficient time to phase into the USDA licensing system.

APHIS published a **Federal Register** notice on May 15, 1989, (54 FR 20097-98), announcing that beginning January 1, 1990, any product not otherwise exempt from licensure which was not produced

under the exemption, which expired December 31, 1989, would be in violation of the Act if shipped anywhere in or from the United States. A product produced under the exemption could be legally shipped intrastate or exported. The Notice further advised persons of the procedures for claiming a one year extension of the exemption. At a public meeting held in Ames, Iowa on July 6 and 7, 1989, announced in the Federal Register at 54 FR 20896, representatives of the Animal and Plant Health Inspection Service (APHIS) stated that APHIS was planning to allow products produced under the 4-year exemption to be shipped until January 1, 1991, to allow manufacturers to clear their inventory.

The purpose of this proposal is to amend § 114.2 of the regulations to provide that products that were prepared under the 4-year exemption may continue to be shipped until January 1, 1991, unless thay have an earlier expiration date. We believe that this proposal is reasonable and appropriate in light of the purpose of the statutorily authorized phase-in period for regulation of these products. At the same time, we believe it is necessary to limit the time during which such products may be distributed after the exemption period has expired.

Producers and other persons in possession of products prepared under exemption would be able to continue to ship such products intrastate or for export until January 1, 1991. Thereafter, products prepared under an exemption which had not been extended, and which are not otherwise exempt, that are shipped anywhere in or from the United States would be violation of the Act and regulations.

This proposed rule would not affect products produced under an exemption which had been extended. It is anticipated that the products produced under an extended exemption will have become licensed by the end of the extension period.

As currently written, § 114.2 (d) contains no provision regarding the continued distribution of products produced during the 4-year exemption period which is not extended. Therefore proposed new § 114.2 (d)(5) would be added to the regulations to address this issue.

Executive Order 12291 and Regulatory Flexibility Act

We are issuing this proposed rule in conformance with Executive Order 12291 and Departmental Regulation 1512–1 and have determined that it is not a "major rule" Based on information compiled by the Department, we have determined that this proposed rule would have an effect on the economy of less than $100 million; would not cause a major increase in costs or prices for consumers, individual industries, Federal, State, or local government agencies, or geographic regions, and would not cause a significant adverse effect on competition, employment, investment, productivity, innovation or on the ability of United States-based enterprises to compete with foreign-based enterprises in domestic or export markets.

The 1985 amendments to the Virus-Serum-Toxin Act provided for a 4-year period of exemption during which time manufacturers of exempted, unlicensed veterinary biological products could continue to produce such products solely for intrastate distribution or export while phasing into the USDA licensing system. The 4-year exemption period expired January 1, 1990. This proposed rule would allow for the continued shipment and sale of exempted products until January 1, 1991.

Allowing shipment until January 1, 1991, would minimize financial hardship for persons who still have products in inventory. At this time, which is more than four years after the passage of the amendments to the Act, it is anticipated that manufacturers would have made the choice of either obtaining a federal license or phasing out the production of unlicensed products. Thus, the proposed period allowing continued shipment of exempted products is expected to have minimal adverse impact on the manufacturer, as well as others who may have such products in inventory, since inventory of such products at this point should be minimal.

Under these circumstances, the Administrator of the Animal and Plant Health inspection Service has determined that this action would not have a significant economic impact on a substantial number of small entities.

Paperwork Reduction Act

This proposed rule contains no information collection or recordkeeping requirements under the Paperwork Reduction Act of 1980 (44 U.S.C. 3501 et seq.).

Executive Order 12372

This program/activity is listed in the Catalog of Federal Domestic Assistance under No. 10.025 and is subject to Executive Order 12372, which requires intergovernmental consultation with State and local officials. (See 7 CFR part 3015, subpart V.)

List of Subjects in 9 CFR Part 114

Animal biologics.

PART 114—PRODUCTION REQUIREMENTS FOR BIOLOGICAL PRODUCTS

1. The authority citation for 9 CFR part 114 would continue to read as follows:

Authority: 21 U.S.C. 151–159; 7 CFR 2.17, 2.51, and 371.2(d).

2. In § 114.2, new paragraph (d)(5) would be added to read as follows:

§ 114.2 Products not prepared under license.

* * * * *

(d) * * *

(5) Products produced prior to January 1, 1990, under an exemption, granted by the Secretary pursuant to this section, which was not extended, may be shipped intrastate or exported, until January 1, 1991, or until the expiration date of such products, whichever is earlier.

Done in Washington, DC, this 26th day of April 1990.

James W. Glosser,

Administrator, Animal and Plant Health Inspection Service.

[FR Doc. 90–10175 Filed 5–1–90; 8:45 am]

BILLING CODE 3410–34–M

DEPARTMENT OF TRANSPORTATION

Federal Aviation Administration

14 CFR Parts 21 and 29

[Docket No. 90–ASW–4; Notice No. SC–90–1–SW]

Special Conditions; Aerospatiale Model AS 332L2 Super Puma Helicopter, Integrated Flight Display System

AGENCY: Federal Aviation Administration (FAA), DOT.

ACTION: Notice of proposed special conditions.

SUMMARY: This notice proposes special conditions for the Aerospatiale Model AS 332L2 helicopter. This helicopter will have a novel or unusual design feature associated with the Integrated Flight Display System. The applicable airworthiness regulations do not contain appropriate safety standards for the requirements to protect critical function systems from the effects of external radio frequency energy sources. This notice contains proposed additional safety standards that the Administrator considers necessary to ensure that critical functions of systems in the Aerospatiale Model AS 332L2 helicopter would be maintained.

DATES: Comments must be received on or before August 30, 1990.

ADDRESSES: Comments on this proposed special condition may be mailed in duplicate to: Federal Aviation Administration, Office of the Assistant Chief Counsel, Attention: Docket No. 90–ASW–4, Fort Worth, Texas 76193–0007, or delivered in duplicate to the Office of the Assistant Chief Counsel, Building 3B, room 158, 4400 Blue Mound Road, Fort Worth, Texas.

All comments must be marked Docket No. 90–ASW–4. Comments may be inspected in the Office of the Assistant Chief Counsel, at the address specified above, between 8 a.m. and 4 p.m., weekdays, except Federal holidays.

FOR FURTHER INFORMATION CONTACT: Mr. Richard Vaughn, FAA, Rotorcraft Standards Staff, Regulations Group, Fort Worth, Texas 76193–0111; telephone (817) 624–5121.

SUPPLEMENTARY INFORMATION:

Comments Invited

Interested persons are invited to participate in the making of these proposed special conditions by submitting such written data, views, or arguments as they may desire. Communications should identify the regulatory docket or notice number and be submitted in duplicate to the address specified above. All communications received on or before the closing date for comments will be considered by the Administrator before taking action on this proposal. The special conditions proposed in this notice may be changed in light of comments received. All comments received will be available, both before and after the closing date for comments, in the Regional Rules Docket for examination by interested parties. A report summarizing each substantive public contact with FAA personnel concerning this rulemaking will be filed in the docket. Commenters wishing the FAA to acknowledge receipt of their comments submitted in response to this notice must include a self-addressed, stamped postcard on which the following statement is made: "Comments to Docket No. 90–ASW–4." The postcard will be date/time stamped and returned to the commenter.

Background

On August 17, 1989, Aerospatiale Division Helicopters, 13725 Marignane, Cedex, France, applied for an amendment to its Type Certificate No. H4EU to include the new Aerospatiale Model AS 332L2 helicopter. The Aerospatiale Model AS 332L1 is being modified to incorporate rotor and airframe modifications, various system improvements, gross weight and airspeed increases, and the addition of the Integrated Flight Display System. The Model AS 332L2 will be a derivative of the Model AS 332L1, which is currently approved under Type Certificate No. H4EU. The Model AS 332L1 is a 24-passenger, two-engine, 18,960-pound transport category helicopter.

Type Certification Basis

The certification basis established for the Model AS 332L1 includes: § 21.29, part 29, effective February 1, 1965, including Amendments 29–1 through 29–9, plus §§ 29.951(c), 29.1183 and 29.1304 (a)(16) of Amendment 29–10. Aerospatiale also elected to comply with Amendments 29–10 through 29–16, except for § 29.397 of Amendment 29–12 concerning rotor brakes, and the Airworthiness Criteria for Helicopter Instrument Flight, dated December 15, 1978.

Special conditions may be issued and amended, as necessary, as part of the type certification basis if the Administrator finds that the airworthiness standards designated in accordance with § 21.101(b)(2) do not contain adequate or appropriate safety standards because of novel or unusual design features of an aircraft or installation. Special conditions, as appropriate, are issued in accordance with § 11.49 after public notice, as required by §§ 11.28 and 11.29(b), effective October 14, 1980, and will become a part of the type certification basis, as provided by § 21.101(b)(2).

Discussion

The Aerospatiale Model AS 332L2 helicopter, at the time of application, was identified as incorporating one and possibly more electrical/electronic systems that will be performing functions critical to the continued safe flight and landing of the helicopter. The Integrated Flight Display System performs the functions of display of attitude, altitude, and airspeed. The display of this information to the pilot is critical to the continued safe flight and landing of the helicopter for instrument flight rules (IFR) operations in Instrument Meteorological Conditions. When the design is finalized, Aerospatiale Division Helicopters will provide the FAA with a preliminary hazard analysis that will identify any other critical functions performed by electrical/electronic systems.

Recent advances in technology have given rise to the application in aircraft designs of advanced electrical and electronic systems that perform functions required for continued safe flight and landing. These advanced systems are responsive to the transient effects of induced electrical current and voltage caused by the high energy radiated electromagnetic fields (HERF) incident on the external surface of the helicopter. These induced transient currents and voltages can degrade the performance of electronic systems by damaging the components or by upsetting the system's functions.

Furthermore, the electromagnetic environment has undergone a transformation not envisioned by the current application of the § 29.1309(a) requirement. Higher energy levels radiate from transmitters that are used for radar, radio, and television. Also, the number of transmitters has increased significantly.

Existing aircraft certification requirements are inappropriate in view of the aforementioned technological advances. In addition, the FAA has received reports of some significant safety incidents and accidents involving military aircraft equipped with advanced electronic systems when they were exposed to electromagnetic radiation.

The combined effects of the technological advances in helicopter design and the changing environment have resulted in an increased level of vulnerability of electrical and electronic systems required for the continued safe flight and landing of the helicopter. Effective measures against the effects of exposure to high energy radiated electromagnetic fields (HERF) must be provided by the design and installation of these systems. The primary factors that have contributed to this increased concern are: (1) The increasing use of sensitive electronics that perform critical functions; (2) the reduced electromagnetic shielding afforded helicopter systems by advanced technology airframe materials; (3) the adverse service experience of military aircraft using these technologies; and (4) the increase in the number and power of radio frequency emitters and the expected increase in the future.

The FAA recognized the need for aircraft certification standards to keep pace with the developments in technology and environment and, in 1986, initiated a high priority program to: (1) Determine and define the electromagnetic energy levels; (2) develop and describe guidance material for design, test, and analysis; and (3) prescribe and promulgate regulatory standards. The FAA participated with industry and airworthiness authorities of other countries to develop internationally recognized standards for certification.

At this time, the FAA and airworthiness authorities of other countries have established a level of HERF environment that a helicopter could be exposed to during IFR operations.

While the HERF requirements are being finalized, the FAA is adopting special conditions for the certification of aircraft that employ electrical/electronic systems performing critical functions. The accepted maximum energy levels in which civilian helicopter system installations must be capable of operating safely are based on surveys and analysis of existing radio frequency emitters. This special condition would require that the helicopter be evaluated under these energy levels for the protection of the electronic system and its associated wiring harness. These external threat levels are believed to represent the worst-case exposure for a helicopter operating IFR.

The defined HERF environment specified in this proposed special condition is based on many critical assumptions; among these is that with the exception of takeoff and landing at an airport, the aircraft would be not less than 500 feet above ground level (AGL). Helicopters operating under visual flight rules (VFR) routinely operate at less than 500 feet AGL and perform takeoffs and landings at locations other than controlled airports. Therefore, it would be expected that the HERF environment experienced by a helicopter operating VFR may exceed the given environment by twice or more.

This special condition would require qualification of systems that perform critical functions, as installed in aircraft, to either a defined HERF environment or to a fixed value using laboratory tests, as follows:

(1) The applicant may demonstrate that the operation and the operational capability of the installed electrical and electronic systems that perform critical functions are not adversely affected when the aircraft is exposed to the HERF environment, defined in Table 1; or

(2) The applicant may demonstrate by a laboratory test that the electrical and electronic systems that perform critical functions withstand a peak electromagnetic field strength of 100 volts per meter (v/m) in a frequency range of 10 KH_z to 18 GH_z. If a laboratory test is used to show compliance with the HERF requirements, no credit would be given for signal attenuation due to installation.

For helicopters, the primary electronic flight displays are critical for IFR operations and a full authority digital engine control (FADEC) is an example of a critical functioning system for all operations (both IFR and VFR).

A level of 100 v/m and further considerations such as an alternate technology backup that is immune to HERF are appropriate at this time for critical functions during IFR operations. A level of 200 v/m and further considerations such as an alternate technology backup that is immune to HERF are more appropriate for critical functions during VFR operations.

A preliminary hazard analysis must be performed by the applicant for approval by the FAA to identify electrical and/or electronic systems that perform critical functions. The term "critical" means those functions whose failure would contribute to or cause a failure condition that would prevent the continued safe flight and landing of the helicopter. The systems identified by the hazard analysis that perform critical functions are candidates for the application of HERF requirements.

A system may perform both critical and noncritical functions. Primary electronic flight display systems and their associated components perform critical functions such as attitude, altitude, and airspeed indication. The HERF requirements would only apply to critical functions.

TABLE 1—FIELD STRENGTH VOLTS/METER

Frequency	Peak	Average
10 to 500 KH_z	80	80
500 to 2000	80	80
2 to 30 MH_z	200	200
30 to 100	33	33
100 to 200	33	33
200 to 400	150	33
400 to 1000	8.3K	2K
1 to 2 GH_z	9K	1.5K
2 to 4	17K	1.2K
4 to 6	14.5K	800
6 to 8	4K	666
8 to 12	9K	2K
12 to 20	4K	509
20 to 40	4K	1K

Compliance with HERF requirements would be demonstrated by tests, analysis, models, similarity with existing systems, or a combination thereof. Service experience alone would not be acceptable since such experience in normal flight operations may not include an exposure to the HERF environmental condition. Reliance on a system with similar design features for redundancy as a means of protection against the effects of external HERF is generally insufficient since all elements of a redundant system are likely to be exposed to the fields concurrently.

The modulation should be selected as the signal most likely to disrupt the operation of the system under test, based on its design characteristics. For example, flight control systems may be susceptible to 3 H_z square wave modulation while the video signals for electronic display systems may be susceptible to 400 H_z sinusoidal modulation. If the worst-case modulation is unknown or cannot be determined, default modulations may be used. Suggested default values are a 1 KH_z sine wave with 80 percent depth of modulation in the frequency range from 10 KH_z to 400 MH_z and 1KH_z square wave with greater than 90 percent depth of modulation from 400 MH_z to 18 GH_z. For frequencies where the unmodulated signal would cause deviations from normal operation, several different modulating signals with various waveforms and frequencies should be applied.

Acceptable system performance would be attained by demonstrating that the system under consideration continues to perform its intended function during and after exposure to required electromagnetic fields. Deviations from system specification may be acceptable and would need to be independently assessed by the FAA for each application.

Conclusion

This action would affect only certain unusual or novel design features on one model series of rotorcraft. It would not be a rule of general applicability and would affect only the manufacturer who applied to the FAA for approval of these features on the rotorcraft.

List of Subjects in 14 CFR Parts 21 and 29

Aircraft, Air transportation, Aviation safety, Rotorcraft, Safety.

The Proposed Special Conditions

Accordingly, the Federal Aviation Administration (FAA) proposes the following special conditions as a part of the type certification basis for the Aerospatiale Model AS 332L2 helicopter.

The authority citation for these special conditions is as follows:

Authority: 49 U.S.C. 1344, 1348(c), 1352, 1354(a), 1355, 1421 through 1431, 1502, 1651(b)(2); 42 U.S.C. 1857f–10, 4321 et seq.; E.O. 11541; 49 U.S.C. 106(g) (Rev. Pub. L. 97–449, January 12, 1983).

Protection for Electrical/Electronic Systems From High Energy Radiated Electromagnetic Fields.

Each system that performs critical functions must be designed and installed to ensure that the operation

and operational capabilities of these critical functions are not adversely affected when the helicopter is exposed to high energy radiated electromagnetic fields external to the helicopter.

Issued in Fort Worth, Texas, on April 24, 1990.

James D. Erickson,

Manager, Rotorcraft Directorate, Aircraft Certification Service.

[FR Doc. 90–10188 Filed 5–1–90; 8:45 am]

BILLING CODE 4910–13–M

---

14 CFR Part 39

[Docket No. 90–NM–45–AD]

Airworthiness Directives; Boeing Model 747SP Series Airplanes

AGENCY: Federal Aviation Administration (FAA), DOT.

ACTION: Notice of proposed rulemaking (NPRM).

SUMMARY: This notice proposes to adopt a new airworthiness directive (AD), applicable to all Boeing Model 747SP series airplanes, which would require the inspection of the wing front spar web over engines Number 2 and 3 for cracking, and repair, if necessary. This proposal is prompted by a recent report of a 26-inch crack of the front spar web. This condition, if not corrected, could result in fuel spillage on an engine and a subsequent fire.

DATES: Comments must be received no later than June 25, 1990.

ADDRESSES: Send comments on the proposal in duplicate to the Federal Aviation Administration, Northwest Mountain Region, Transport Airplane Directorate, ANM–103, Attention: Airworthiness Rules Docket No. 90–NM–45–AD, 17900 Pacific Highway South, C–68966, Seattle, Washington 98168. The applicable service information may be obtained from Boeing Commercial Airplanes, P.O. Box 3707, Seattle, Washington 98124. This information may be examined at the FAA, Northwest Mountain Region, Transport Airplane Directorate, 17900 Pacific Highway South, Seattle, Washington, or Seattle Aircraft Certification Office, 9010 East Marginal Way South, Seattle, Washington.

FOR FURTHER INFORMATION CONTACT: Mr. Steven C. Fox, Airframe Branch, ANM–120S; telephone (206) 431–1923. Mailing address: FAA, Northwest Mountain Region, 17900 Pacific Highway South, C–68966, Seattle, Washington 98168.

SUPPLEMENTARY INFORMATION: Interested persons are invited to participate in the making of the proposed rule by submitting such written data, views, or arguments as they may desire. Communications should identify the regulatory docket number and be submitted in duplicate to the address specified above. All communications received on or before the closing date for comments specified above will be considered by the Administrator before taking action on the proposed rule. The proposals contained in this Notice may be changed in light of the comments received.

Comments are specifically invited on the overall regulatory, economic, environmental, and energy aspects of the proposed rule. All comments submitted will be available, both before and after the closing date for comments, in the Rules Docket for examination by interested persons. A report summarizing each FAA/public contact, concerned with the substance of this proposal, will be filed in the Rules Docket.

Commenters wishing the FAA to acknowledge receipt of their comments submitted in response to this Notice must submit a self-addressed, stamped post card on which the following statement is made: "Comments to Docket Number 90–NM–45–AD." The post card will be date/time stamped and returned to the commenter.

Discussion

A non-U.S. opeator of a Boeing Model 747SP series airplane reported finding a 26-inch crack in the wing front spar between front spar station (FSS) 646 and FSS 668 on an airplane that had accumulated 26,713 flight hours and 6,140 flight cycles. The crack was detected adjacent to the No. 3 engine while the airplane was being refueled. The FAA has determined that this crack was attributed to sonic fatigue. This condition, if not corrected, could result in fuel spillage on an engine and a subsequent fire.

The FAA has reviewed and approved Boeing Alert Service Bulletin 747–57A2259, dated February 15, 1990, which describes procedures for visual and ultrasonic inspections of the wing front spar to detect cracks; and a terminating modification, comprised of replacement of a web section and the addition of a stiffener outboard of the web splice.

Since this condition is likely to exist or develop on other airplanes of this same type design, an AD is proposed which would require the visual and ultrasonic inspections of the wing front spar to detect cracks, in accordance with the service bulletin previously described. Repair, if necessary, would be required to be accomplished in a manner approved by the Manager of the Seattle Aircraft Certification Office. This proposal also provides for optional accomplishment of the modification which, if installed, would constitute terminating action for the repetitive inspections.

There are approximately 44 Model 747SP series airplanes of the affected design in the worldwide fleet. It is estimated that 15 airplanes of U.S. registry would be affected by this AD, that it would take approximately 16 manhours per airplane to accomplish the required actions, and that the average labor cost would be $40 per manhour. Based on these figures, the total cost impact of the AD on U.S. operators is estimated to be $9,600.

The regulations proposed herein would not have substantial direct effects on the States, on the relationship between the national government and the States, or on the distribution of power and responsibilities among the various levels of government. Therefore, in accordance with Executive Order 12612, it is determined that this proposal would not have sufficient federalism implications to warrant the preparation of a Federalism Assessment.

For the reasons discussed above, I certify that this proposed regulation (1) Is not a "major rule" under Executive Order 12291; (2) is not a "significant rule" under DOT Regulatory Policies and Procedures (44 FR 11034; February 26, 1979); and (3) if promulgated, will not have a significant economic impact, positive or negative, on a substantial number of small entities under the criteria of the Regulatory Flexibility Act. A copy of the draft evaluation prepared for this action is contained in the regulatory docket. A copy of it may be obtained from the Rules Docket.

List of Subjects in 14 CFR Part 39

Air transportation, Aircraft, Aviation safety, Safety.

The Proposed Amendment

Accordingly, pursuant to the authority delegated to me by the Administrator, the Federal Aviation Administration proposes to amend 14 CFR part 39 of the Federal Aviation Regulations as follows:

PART 39—[AMENDED]

1. The authority citation for part 39 continues to read as follows:

Authority: 49 U.S.C. 1354(a), 1421 and 1423; 49 U.S.C. 106(g) (Revised Pub. L. 97–449, January 12, 1983); and 14 CFR 11.89.

§ 39.13 [Amended]

2. Section 39.13 is amended by adding the following new airworthiness directive:

Boeing: Applies to all Model 747SP series airplanes, certificated in any category. Compliance required as indicated, unless previously accomplished.

To detect cracks in the front spar web, accomplish the following:

A. Within the next six months after the effective date of this AD, perform a visual and an ultrasonic inspection of the front spar web between Front Spar Station (FSS) 636 and FSS 675, in accordance with Boeing Alert Service Bulletin 747–57A2259, dated February 15, 1990. Repeat these inspections at intervals not to exceed 1,000 landings.

B. If cracks are found, repair prior to further flight, in a manner approved by the Manager, Seattle Aircraft Certification Office, FAA, Northwest Mountain Region, or accomplish the terminating modification described in paragraph C., below.

C. Installation of the terminating modification in accordance with Boeing Alert Service Bulletin 747–57A2259, dated February 15, 1990, constitutes terminating action for the requirements of this AD.

D. An alternate means of compliance or adjustment of the compliance time, which provides an acceptable level of safety, may be used when approved by the Manager, Seattle Aircraft Certification Office, FAA, Northwest Mountain Region.

Note: The request should be forwarded through an FAA Principal Maintenance Inspector (PMI), who will either concur or comment, and then send it to the Manager, Seattle Aircraft Certification Office.

E. Special flight permits may be issued in accordance with FAR 21.197 and 21.199 to operate airplanes to a base in order to comply with the requirements of this AD.

All persons affected by this directive who have not already received the appropriate service documents from the manufacturer may obtain copies upon request to Boeing Commercial Airplanes, P.O. Box 3707, Seattle, Washington 98124. These documents may be examined at the FAA, Northwest Mountain Region, Transport Airplane Directorate, 17900 Pacific Highway South, Seattle, Washington, or Seattle Aircraft Certification Office, 9010 East Marginal Way South, Seattle, Washington.

Issued in Seattle, Washington, on April 23, 1990.

Leroy A. Keith,

Manager, Transport Airplane Directorate, Aircraft Certification Service.

[FR Doc. 90–10185 Filed 5–1–90; 8:45 am]

BILLING CODE 4910–13–M

14 CFR Part 39

[Docket No. 88–ASW–51]

Airworthiness Directives; Robinson Helicopter Company (RHC) Model R22 Series Helicopters

AGENCY: Federal Aviation Administration (FAA), DOT.

ACTION: Notice of proposed rulemaking (NPRM); withdrawal.

SUMMARY: This document withdraws an NPRM which proposed to adopt an airworthiness directive (AD) to require repetitive preflight checks of the lower clutch actuator bearing assembly and replacement, as necessary, on RHC Model R22 series helicopters. Since publication of the NPRM, the manufacturer has issued FAA-approved revisions to the Rotorcraft Flight Manual (RFM) which, in conjunction with existing manufacturer's service documents, adequately provide for the safety checks proposed in the NPRM. Accordingly, the NPRM is being withdrawn.

FOR FURTHER INFORMATION CONTACT: Mr. Marvin Rammelsberg, Federal Aviation Administration, Los Angeles Aircraft Certification Office, ANM-100L, Long Beach, California; telephone (213) 988–5260.

SUPPLEMENTARY INFORMATION: A proposal to amend part 39 of the Federal Aviation Regulations to include an AD requiring repetitive checks of the lower clutch actuator bearing assembly, RHC part number (P/N) A181, for seal damage and differential temperatures on RHC model R22 series helicopters was published in the Federal Register on February 6, 1989 (54 FR 5637).

Since publication of the NPRM, RHC has submitted, and the FAA has approved a revision to section 4 of the Rotorcraft Flight Manual, dated September 9, 1989, which includes the required daily checks that were proposed in the NPRM.

The Decision and Withdrawal

Accordingly, I conclude that the FAA should not proceed with the adoption of the proposed rulemaking in the NPRM now pending. Therefore, the NPRM to add an AD pertaining to Model R22 series helicopters is withdrawn.

This action does not preclude the FAA from considering similar proposals in the future course of action on this subject.

The authority citation for part 39 continues to read as follows:

Authority: 49 U.S.C. 1354(a), 1421 and 1423; 49 U.S.C. 106(g) (Revised Pub. L. 97–449, January 12, 1983); and 14 CFR 11.89.

Issued in Fort Worth, Texas, on April 25, 1990.

James D. Erickson,

Manager, Rotorcraft Directorate, Aircraft Certification Service.

[FR Doc. 90–10187 Filed 5–1–90; 8:45 am]

BILLING CODE 4910–13–M

14 CFR Part 39

[Docket No. 89–ASW–44]

Airworthiness Directives; McDonnell Douglas Helicopter Company (MDHC) Model 369 Series Helicopters

AGENCY: Federal Aviation Administration (FAA), DOT.

ACTION: Notice of proposed rulemaking (NPRM).

SUMMARY: This notice proposes to adopt a new airworthiness directive (AD) which would supersede an AD that requires repetitive inspections of the overrunning clutch assembly. The proposed new AD would require replacement of the overrunning clutch assembly on MDHC Model 369 series helicopters equipped with a cargo hook. The proposed AD is needed to prevent overrunning clutch failures which could result in loss of power to the main rotor.

DATES: Comments must be received on or before June 18, 1990.

ADDRESSES: Comments on the proposal may be mailed in duplicate to: Office of the Assistant Chief Counsel, Federal Aviation Administration, Fort Worth, Texas 76139–0007, or delivered in duplicate to 4400 Blue Mound Road, room 158, Building 3B, of the Regional Rules Docket at the above address. Comments must be marked: Docket No. 89–ASW–44.

Comments may be inspected at the above location in room 158 between 8 a.m. and 4 p.m., weekdays, except Federal holidays.

The applicable service information may be obtained from McDonnell Douglas Helicopter Company, 5000 E. McDowell Road, Attention: Publications Department, MS543/D214, Mesa, Arizona 85205, or may be examined in the Regional Rules Docket.

FOR FURTHER INFORMATION CONTACT: Mr. Roy McKinnon, ANM–143L, Northwest Mountain Region, Los Angeles Aircraft Certification Office, 3229 East Spring Street, Long Beach, California 90806–2425, telephone (213) 988–5247.

SUPPLEMENTARY INFORMATION: Interested persons are invited to participate in the making of the proposed rule by submitting such

written data, views, or arguments as they may desire. Communications should identify the regulatory docket number and be submitted in duplicate to the address specified above. All communications received on or before the closing date for comments will be considered by the FAA before any final action is taken on the proposed rule. The proposal contained in this notice may be changed in light comments received.

Comments are specifically invited on the overall regulatory, economic, environmental, and energy aspects of the proposed rule. All comments submitted will be available, both before and after the closing date for comments, in the Regional Rules Docket, Office of the Assistant Chief Counsel, Federal Aviation Administration, 4400 Blue Mound Road, room 158, Building 3B, Fort Worth, Texas, for examination by interested persons. A report summarizing each FAA/public contact concerned with the substance of the proposed AD, will be filed in the Rules Docket.

Commenters wishing the FAA to acknowledge receipt of their comments submitted in reponse to this notice must submit a self-addressed, stamped postcard on with the following statement is made: Comments to Docket Number 89–SW–44. The postcard will be date/time stamped and returned to the commenter.

This notice proposes to supersede Amendment 39–4077 (46 FR 20534; April 6, 1981): AD 81–07–10, as amended by Amendment 39–4266 (46 FR 56776; November 19, 1981). Amendment 39–4077, as amended by Amendment 39–4266, currently requires repetitive inspections of the overrunning clutch assembly and removal of a sprag clutch assembly at 1,800 hours' time in service. After issuing Amendment 39–4077, as amended by Amendment 39–4266, the FAA has received reports of sprag element chipping and wear of the sprag, cage, and the inner and outer races of the overrunning clutch assembly on MDHC Model 369 series helicopters equipped with a cargo hook. Since this condition is likely to exist or develop on other helicopters of the same type design, the proposed new AD would require replacement of the specified overrunning clutch assembly with a specified clutch assembly and subsequent periodic inspections of the assembly and mandatory replacement of the sprag assembly in the clutch on or before attaining 1,800 hours' time in service on MDHC Model 369 series helicopters equipped with a cargo hook.

The regulations proposed herein would not have substantial direct effects on the States, on the relationship between the national government and the States, or on the distribution of power and responsibilities among the various levels of government. Therefore, in accordance with Executive Order 12612, it is determined that this proposal will not have sufficient federalism implications to warrant the preparation of a Federalism Assessment.

The FAA has determined that this proposed regulation involves approximately 200 helicopters of U.S. Registry. It is estimated that it would take approximately 5 manhours per helicopter at $40 per hour, and $2,248 per helicopter for parts to accomplish this work. Based on these figures, the total cost impact on each U.S. operator is estimated to be $2,448 per helicopter for a total cost of $489,600. Therefore, I certify that this action: (1) Is not a "major rule" under Executive Order 12291; (2) is not a "significant rule" under DOT Regulatory Policies and Procedures (44 FR 11034; February 26, 1979); (3) does not warrant preparation of a regulatory evaluation as the anticipated impact is so minimal; and (4) if promulgated, will not have a significant economic impact, positive or negative, on a substantial number of small entities under the criteria of the Regulatory Flexibility Act.

List of Subjects in 14 CFR Part 39

Air transportation, Aircraft, Aviation safety, Safety.

The Proposed Amendment

Accordingly, pursuant to the authority delegated to me by the Administrator, the Federal Aviation Administration proposes to amend part 39 of the Federal Aviation regulations (14 CFR 39.13) as follows:

PART 39—[AMENDED]

1. The authority citation for part 39 continues to read as follows:

Authority: 49 U.S.C. 1354(a), 1421 and 1423; 49 U.S.C. 106(g) (Revised Pub. L. 97–449, January 12, 1983); and 14 CFR 11.89.

§ 39.13 [Amended]

2. Section 39.13 is amended by adding the following new AD:

McDonnnell Douglas Helicopter Company (MDHC): Applies to all Model 369 series helicopters certificated in all categories, that are equipped with a cargo hook. (Docket No. 89–ASW–44)

Compliance required as indicated, unless already accomplished.

To prevent an overrunning clutch assembly failure, which will result in the loss of engine power to the main rotor, accomplish the following:

(a) Within the next 300 hours' time in service after the effective date of this AD or at the next annual inspection, whichever occurs first, accomplish the following:

(1) Remove overrunning clutch assembly, part number (P/N) 369A5350–BSC, –601, or –603, if installed.

(2) Install the overrunning clutch subassembly, P/N 369A5350–41, in the clutch assembly, P/N 369A5350–BSC, –601, or –603, whichever is installed, or replace clutch assemblies with P/N 369A5350–605.

Note: The clutch subassembly, P/N 369A5350–31, can be converted to P/N 369A5350–41, in accordance with MDHC Service Information Notice (SIN) No. DN–164, EX–54, and FN–44, dated October 27, 1989. Also, the clutch assembly, P/N 369A5350–BSC, –601, or –603, can be reidentified as a –605 clutch assembly after installation of a clutch subassembly, P/N 369A5350–41.

(b) Inspect the overrunning clutch assembly, P/N 369A5350–605 or P/N 369A5350–BSC, –601, or –603 with P/N 369A5350–41 subassembly, at intervals not to exceed 300 hours' time in service or at annual inspections, whichever occurs first, for condition of the race inner clutch, P/N 369A5353–3, the race outer clutch, P/N 369A5352, and the sprag assembly, P/N 369D25351.

(c) Replace sprag assemblies, P/N 369D25351 and P/N 369A5364, with an airworthy part on or before attaining 1,800 hours' total time in service.

Note: The Handbook of Maintenance Instruction and the Component Overhaul Manual pertain to the removal, identification, and installation of these assemblies.

(d) Special flight permits may be issued in accordance with FAR 21.197 and 21.199 to operate helicopters to a base for the accomplishment of inspections required by this AD.

(e) Alternative inspections, modifications, or other actions which provide an equivalent level of safety may be used when approved by the Manager. Los Anegles Aircraft Certification Office, ANM–100L, FAA. Northwest Mountain Region, 3229 East Spring Street, Long Beach, California 90806–2425.

(f) For the purpose of establishing the "time in service" specified in this AD, either the clutch total time with hook attached may be used, or a separate and permanent log of external load operating time (take-off to landing on a flight which involves external load operations), may be used. This log must meet the requirements of FAR 91.173.

Issued in Forth Worth, Texas, on April 24, 1990.

James D. Erickson,

Manager, Rotorcraft Directorate, Aircraft Certification Service.

[FR Doc. 90–10186 Filed 5–1–90; 8:45 am]

BILLING CODE 4910–13–M

---

14 CFR Part 75

[Airspace Docket No. 90–AWA–4]

Proposed Establishment of Jet Routes

AGENCY: Federal Aviation Administration (FAA), DOT.

ACTION: Notice of proposed rulemaking.

SUMMARY: This notice proposes to establish new Jet Routes J–571, J–572, J–574, J–576, and J–577 located in the northwest portion of the United States. The proposed establishment of these jet routes are the result of a request from Transport Canada and coincides with changes in the Canadian airspace structure. This action would improve traffic flow during transborder operations and support that request.

DATES: Comments must be received on or before June 11, 1990.

ADDRESSES: Send comments on the proposal in triplicate to: Federal Aviation Administration, Office of the Chief Counsel, Attention: Rules Docket [AGC–10], Airspace Docket No. 90–AWA–4, 800 Independence Avenue SW., Washington, DC 20591.

The official docket may be examined in the Rules Docket, weekdays, except Federal holidays, between 8:30 a.m. and 5 p.m. The FAA Rules Docket is located in the Office of the Chief Counsel, room 916, 800 Independence Avenue SW., Washington, DC.

An informal docket may also be examined during normal business hours at the office of the Regional Air Traffic Division.

FOR FURTHER INFORMATION CONTACT: Alton D. Scott, Airspace and Obstruction Evaluation Branch (ATP–240), Airspace-Rules and Aeronautical Information Division, Air Traffic Rules and Procedures Service, Federal Aviation Administration, 800 Independence Avenue SW., Washington, DC 20591; telephone: (202) 267–9252.

SUPPLEMENTARY INFORMATION:

Comments Invited

Interested parties are invited to participate in this proposed rulemaking by submitting such written data, views, or arguments as they may desire. Comments that provide the factual basis supporting the views and suggestions presented are particularly helpful in developing reasoned regulatory decisions on the proposal. Comments are specifically invited on the overall regulatory, aeronautical, economic, environmental, and energy aspects of the proposal. Communications should identify the airspace docket and be submitted in triplicate to the address listed above. Commenters wishing the FAA to acknowledge receipt of their comments on this notice must submit with those comments a self-addressed, stamped postcard on which the following statement is made: "Comments to Airspace Docket No. 90–AWA–4." The postcard will be date/time stamped and returned to the commenter. All communications received before the specified closing date for comments will be considered before taking action on the proposed rule. The proposal contained in this notice may be changed in the light of comments received. All comments submitted will be available for examination in the Rules Docket both before and after the closing date for comments. A report summarizing each substantive public contact with FAA personnel concerned with this rulemaking will be filed in the docket.

Availability of NPRM's

Any person may obtain a copy of this Notice of Proposed Rulemaking (NPRM) by submitting a request to the Federal Aviation Administration, Office of Public Affairs, Attention: Public Inquiry Center, APA–230, 800 Independence Avenue SW., Washington, DC 20591, or by calling (202) 267–3484. Communications must identify the notice number of this NPRM. Persons interested in being placed on a mailing list for future NPRM's should also request a copy of Advisory Circular No. 11–2A which describes the application procedure.

The Proposal

The FAA is considering an amendment to part 75 of the Federal Aviation Regulation (14 CFR part 75) to establish new Jet Routes J–571, J–572, J–574, J–576, and J–577 located in the northwest portion of the United States. This proposal is at the request of Transport Canada to support airway changes in the Canadian airspace structure. This action would improve traffic flow during transborder operations. Section 75.100 of part 75 of the Federal Aviation Regulations was republished in Handbook 7400.6F dated January 2, 1990.

The FAA has determined that this proposed regulation only involves an established body of technical regulations for which frequent and routine amendments are necessary to keep them operationally current. It, therefore—(1) is not a "major rule" under Executive Order 12291; (2) is not a "significant rule" under DOT Regulatory Policies and Procedures (44 FR 11034; February 26, 1979); and (3) does not warrant preparation of a regulatory evaluation as the anticipated impact is so minimal. Since this is a routine matter that will only affect air traffic procedures and air navigation, it is certified that this rule, when promulgated, will not have a significant economic impact on a substantial number of small entities under the criteria of the Regulatory Flexibility Act.

List of Subjects in 14 CFR Part 75

Aviation safety, Jet routes.

The Proposed Amendment

Accordingly, pursuant to the authority delegated to me, the Federal Aviation Administration proposes to amend part 75 of the Federal Aviation Regulations (14 CFR part 75) as follows:

PART 75—ESTABLISHMENT OF JET ROUTES AND AREA HIGH ROUTES

1. The authority citation for part 75 continues to read as follows:

Authority: 49 U.S.C. 1348(a), 1354(a), 1510; Executive Order 10854; 49 U.S.C. 106(g) (Revised Pub. L. 97–449, January 12, 1983); 14 CFR 11.69.

§ 75.100 [Amended]

2. Section 75.100 is amended as follows:

J–571 [New]

From Williston, ND; to Brandon, MB, Canada. The airspace within Canada is excluded.

J–572 [New]

From Glasgow, MT; to Swift Current, SK, Canada. The airspace within Canada is excluded.

J–574 [New]

From Glasgow, MT; to Lethbridge, AB, Canada. The airspace within Canada is excluded.

J–576 [New]

From Glasgow, MT; to Medicine Hat, AB, Canada. The airspace within Canada is excluded.

J–577 [New]

From Minot, ND; to Lumsden, SK, Canada. The airspace within Canada is excluded.

Issued in Washington, DC, on April 19, 1990.

Harold W. Becker,

Manager, Airspace-Rules and Aeronautical Information Division.

[FR Doc. 90–10189 Filed 5–1–90; 8:45 am]

BILLING CODE 4910–13–M

DEPARTMENT OF THE TREASURY

Customs Service

19 CFR Part 122

RIN 1515–AA69

Fingerprinting Requirement for Overflight Exemption Applicants

AGENCY: Customs Service, Treasury.

ACTION: Notice of withdrawal.

SUMMARY: This document withdraws a proposed amendment to the Customs Regulations which would have required fingerprinting as part of the application process for all usual and anticipated pilots and crewmembers seeking overflight exemptions for flights that did not involve either air ambulance operations or the non-emergency transport of persons seeking medical treatment in the U.S. The proposal was made in a **Federal Register** document published on January 24, 1989. Due to the negative reponse from commenters and the logistical problems Customs would face in implementing the proposal, Customs has decided to withdraw the proposal.

DATE: Withdrawal effective May 2, 1990.

FOR FURTHER INFORMATION CONTACT: Esther Mandelay, Office of Passenger Enforcement and Facilitation (202–566–5607).

SUPPLEMENTARY INFORMATION:

Background

On January 24, 1989, Customs published a document in the **Federal Register** (54 FR 3490), proposing that applicants for overflight exemptions be required to be fingerprinted. It was proposed that § 122.25, customs Regulations (19 CFR 122.25) be amended to state that except for flights involving air ambulance operations and the non-emergency transport of persons seeking medical treatment, all usual and anticipated pilots and crewmembers of flights applying for overflight exemptions must submit fingerprints. It was thought that a fingerprinting requirement would improve the overflight exemption program by enhancing customs ability to investigate the background of overflight applicants.

Eight comments were received in response to the document. Most of the commenters were opposed to the proposal, believing it to be an unnecessary intrusion as there is no evidence that such a requirement would curtail illegal drug trafficking. It was also stated that such a requirement would not be cost-effective.

After careful consideration of all the comments received and further review of the matter, Customs agrees with the majority of commenters that requiring fingerprints and successfully ensuring that the fingerprints on file are those of the actual pilot or crewmember on a flight seeking an overflight exemption may not be a cost-effective way of curtailing drug trafficking. Accordingly, based on both the negative response from commenters and the logistical problems Customs perceives would be caused by implementing this fingerprinting proposal, the proposal is withdrawn.

Drafting Information

The principal author of this document was Harold M. Singer, Regulations and Disclosure Law Branch, Office of Regulations and Rulings, U.S. Customs Service. However, personnel from other offices participated in its development.

Carol Hallett,

Commissioner of Customs.

Approved: April 9, 1990.

John P. Simpson,

Acting Assistant Secretary of the Treasury.

[FR Doc. 90–10141 Filed 5–1–90; 8:45 am]

BILLING CODE 4820–02–M

---

19 CFR Part 133

Notification to Copyright Owners of Importation of Lawfully Made Copies

AGENCY: U.S. Customs Service, Treasury.

ACTION: Withdrawal of proposed rule.

SUMMARY: This document withdraws a proposal to amend the Customs Regulations to provide for notification to copyright owners of the importation of lawfully made copies or phonorecords of copyrighted works. The proposal was made pursuant to the Copyright Act of 1976 which authorized the Secretary of the Treasury to prescribe a procedure pursuant to which any person claiming an interest in a copyrighted work may be notified of the importation of articles that appear to be copies or phonorecords of the work. After careful analysis of the comments received in response to the proposal, Customs has determined that the operational burden of providing such notice to the numerous copyright holders is too great a strain on limited Customs resources. Accordingly, the proposal is being withdrawn.

DATES: Withdrawal effective May 2, 1990.

FOR FURTHER INFORMATION CONTACT: Samuel A. Orandle, Value, Special Programs & Admissibility Branch (202–566–2938).

SUPPLEMENTARY INFORMATION:

Background

Several provisions of the Copyright Act of 1976 (Pub. L. 94–533, 17 U.S.C. 101–810) ("The Act") directly affect procedures of the Customs Service relating to the importation of copyrighted works.

To conform the Customs Regulations to the Copyright Act of 1976, a notice was published in the **Federal Register** (43 FR 31245), on July 7, 1983, proposing to amend part 133, Customs Regulations (19 CFR part 133), which relates to trademarks, tradenames and copyrights. In this document, Customs did not propose to notify copyright owners of the importation of articles that appear to be copies or phonocopies of their works, whether they be lawfully made or piratical. Customs believed there was no need to notify copyright owners of the importation of piratical copies because those copies are either seized, forfeited and destroyed by Customs, or ordered returned to the copyright owner. Accordingly, they represent no threat to the copyright owner. Customs also did not, at that time, propose a notification procedure for the importation of lawfully made copies because there was thought to be little demand by copyright owners for notification of these imports.

Comments received in response to this proposal indicated that some copyright owners did desire notification when copies or phonorecords are imported. In order to obtain further information, Customs published another notice of proposed rulemaking in the **Federal Register** (52 FR 9498), on March 25, 1987. In this document, Customs reaffirmed its belief that notice is not necessary for piratical copies but proposed that notification be provided for the importation of lawfully made copies and invited public comment.

Determination

The adoption of the initiative would require Customs import specialists to review entry documentation for all copyrighted protected works and to obtain and transmit the information to the copyright holder. Such a project would require a significantly large allocation of resources. Moreover, the procedure would run counter to the efforts of Customs at automating the entry process by reducing the number of shipments that could be eligible for bypass procedures.

Upon further consideration of the matter, Customs has determined that the resources of Customs could more efficiently be allocated to detaining and seizing unlawfully made copies, in conjunction with enforcing copyright violations. Accordingly, Customs has decided to withdraw the proposal.

Drafting Information

The principal author of this document was Earl W. Martin, Regulations and Disclosure Law Branch, Office of Regulations and Rulings, U.S. Customs

Service. However, personnel from other offices participated in its development.

Carol Hallett,

Commissioner of Customs.

Approved: April 17, 1990.

John P. Simpson,

Acting Assistant Secretary of the Treasury.

[FR Doc. 90-10142 Filed 5-1-90; 8:45 am]

BILLING CODE 4820-02-M

FEDERAL COMMUNICATIONS COMMISSION

47 CFR Parts 21, 43, 74, 78, and 94

[General Docket Nos. 90-54, 80-113]

Multipoint Distribution Service, Multichannel Multipoint Distribution Service, Instructional Television Fixed Service, Private Operational-Microwave Fixed Service, and Cable Television Relay Service

AGENCY: Federal Communications Commission.

ACTION: Proposed rules and inquiry; extension of comment and reply comment deadlines.

SUMMARY: In response to a request by the United States Catholic Conference, supported by numerous other interested parties, in order to provide additional time for parties to compile and prepare information for submission, this action extends the comment and reply comment deadlines in this rulemaking proceeding to May 7, 1990, and June 6, 1990, respectively.

DATES: Comments must be submitted on or before May 7, 1990, and reply comments on or before June 6, 1990.

ADDRESSES: Federal Communications Commission, Washington, DC 20554.

FOR FURTHER INFORMATION CONTACT: Bruce Romano at (202) 632-9356.

SUPPLEMENTARY INFORMATION:

In re amendment of parts 21, 43, 74, 78, and 94 of the Commission's Rules Pertaining to Rules Governing Use of the Frequencies in the 2.1 and 2.5 GHz Bands Affecting: Private Operational-Fixed Microwave Service, Multipoint Distribution Service, Multichannel Multipoint Distribution Service, Instructional Television Fixed Service, and Cable Television Relay Service.

Order

Adopted: April 18, 1990
Released: April 19, 1990

By the Chief, Mass Media Bureau.

1. Pursuant to a request filed by the United States Catholic Conference on April 13, 1990, and supported by numerous other interested parties, the deadline for filing comments in the above-referenced rulemaking proceeding is extended to May 7, 1990, and the deadline for filing reply comments is extended to June 6, 1990.

Roy J. Stewart,

Chief, Mass Media Bureau.

[FR Doc. 90-10123 Filed 5-1-90; 8:45 am]

BILLING CODE 6712-01-M

47 CFR Parts 21 and 94

[Gen. Docket No. 90-216; FCC 90-127]

New Channeling Plan in the 10550-10680 MHz band (10.5 GHz)

AGENCY: Federal Communications Commission.

ACTION: Proposed rule.

SUMMARY: The Commission proposes to amend parts 21 and 94 of its rules to provide for four 3.75 MHz bandwidth channel pairs in the 10550-10680 MHz band. These rule modifications are being proposed to promote wider and more efficient utilization of this segment (10550-10680 MHz) of the radio spectrum.

DATES: Comments must be received on or before May 25, 1990 and reply comments on or before June 11, 1990.

ADDRESSES: Federal Communications Commission, Washington, DC 20554.

FOR FURTHER INFORMATION CONTACT: Frank Peace, Jr., Common Carrier Bureau (202) 634-1779.

SUPPLEMENTARY INFORMATION: This is a summary of a Notice of Proposed Rulemaking (NPRM) in General Docket No. 90-216 adopted by the Commission on April 9, 1990, and released April 25, 1990. The full text of the item may be examined in the Commission's Dockets Branch, room 230, 1919 M Street NW., Washington, DC, during regular business hours or purchased from the Commission's duplicating contractor, International Transcription Services, 2100 M Street NW., Washington, DC 20037, telephone (202) 857-3800.

The Harris Corporation—Farinon Division (Harris) seeks amendment of parts 21 and 94 of the rules to authorize a new channeling plan to provide for four 3.75 MHz bandwidth channel pairs in the 10550-10565 MHz and 10615-10630 MHz bands. Harris argues that increasing the bandwidth, as it proposes, would promote more efficient use of the spectrum, while enhancing user options in meeting operational fixed microwave needs. According to Harris, the proposed 3.75 MHz bandwidth channel pairs could provide the equivalent of about eight T-1 circuits, or approximately 192 voice channels. In its view, none of the existing channel pairs provided by §§ 21.701(d) and 94.65(i) would be affected by its proposal. Moreover, it asserts, existing frequency coordination procedures will ensure compatibility of operations between the proposed 3.75 MHz channeling plan with the existing 1.25 MHz and 2.5 MHz schemes in the band.

Harris further notes that its proposal fits within the 5 MHz bandwidth authorized in the 10550-10680 MHz band allocations, and that a bandwidth of 3.75 MHz is consistent with current common carrier allocations at 2110-2180 MHz (2GHz), where the maximum bandwidth is 3.5 MHz. The use of common modulation techniques and transmission bit rates between the 2 GHz and 10.5 GHz bands would, Harris claims, encourage spectrally efficient system design(s).

All commenters generally support Harris' proposal. However, one commenter raises some concern regarding the adequacy of existing frequency coordination procedures to ensure the necessary interference protection to existing operations in the band. But the party offers no specifics in this regard.

In support of the proposal, the Commission notes that the proposal has the potential to maximize spectrum efficiency, both in terms of the number of potential users and the type of transmissions. The Commission reasons that the under-utilization of the 10550-10680 MHz band can be attributed to smaller bandwidth allocations and the slow development of Digital Termination Systems.

The proposed channeling plan, in its opinion, would alleviate the congestion in the 2 GHz band created by cellular radio licensees using those frequencies to interconnect cells to mobile telephone switching offices. Finally, it concludes that the existing microwave frequency coordination procedures outlined in §§ 21.100(d) and 94.63(a) will provide sufficient protection to existing users in the band, but it asks that interested parties provide specific changes they feel are necessary.

This proposal is expected to enhance the operations of many small entities and cellular telephone companies by the increased efficient utilization of the spectrum.

Comments on the proposed rules are sought.

Legal Basis

This NPRM seeking to amend parts 21 and 94 of the Commission's Rules is issued pursuant to authority contained in sections 4(i), 303(g), 303(r), and 332(a) of the Communications Act of 1934, as amended.

List of Subjects

47 CFR Part 21

Frequencies, Radio.

47 CFR Part 94

Frequencies, Radio.

Federal Communications Commission.

Donna R. Searcy,

Secretary.

[FR Doc. 90–10125 Filed 5–1–90; 8:45 am]

BILLING CODE 6712–01–M

47 CFR Part 73

[MM Docket No. 90–220, RM–7231]

Radio Broadcasting Services, Hobbs, NM

AGENCY: Federal Communications Commission.

ACTION: Proposed rule.

SUMMARY: The Commission requests comments on a petition by Oil Patch Broadcasting Partnership, seeking the allotment of Channel 243A to Hobbs, New Mexico, as the community's fourth local FM service. Petitioner states that it will apply for the channel, if allotted. Channel 243A can be allotted to Hobbs in compliance with the Commission's minimum distance separation requirements without the imposition of a site restriction. The coordinates for this allotment are North Latitude 32–42–00 and West Longitude 103–07–54. Mexican concurrence is required since Hobbs is located within 320 kilometers of the U.S.-Mexican border.

DATES: Comments must be filed on or before June 18, 1990, and reply comments on or before July 3, 1990.

ADDRESSES: Federal Communications Commission, Washington, DC 20554. In addition to filing comments with the FCC, interested parties should serve the petitioner, or its counsel or consultant, as follows: Matt Edwards, c/o National Cellular, 301 Route 17–N, 4th Floor, Rutherford, New Jersey 07070 (Petitioner).

FOR FURTHER INFORMATION CONTACT: Leslie K. Shapiro, Mass Media Bureau, (202) 634–6530.

SUPPLEMENTARY INFORMATION: This is a synopsis of the Commission's Notice of Proposed Rule Making, MM Docket No. 90–220, adopted April 6, 1990, and released April 25, 1990. The full text of this Commission decision is available for inspection and copying during normal business hours in the FCC Dockets Branch (Room 230), 1919 M Street, NW., Washington, DC. The complete text of this decision may also be purchased from the Commission's copy contractor, International Transcription Service, (202) 857–3800, 2100 M Street, NW., Suite 140, Washington, DC 20037.

Provisions of the Regulatory Flexibility Act of 1980 do not apply to this proceeding.

Members of the public should note that from the time a Notice of Proposed Rule Making is issued until the matter is no longer subject to Commission consideration or court review, all *ex parte* contacts are prohibited in Commission proceedings, such as this one, which involve channel allotments. See 47 CFR 1.1204(b) for rules governing permissible *ex parte* contacts.

For information regarding proper filing procedures for comments, see 47 CFR 1.415 and 1.420.

List of Subjects in 47 CFR Part 73

Radio broadcasting.

Federal Communications Commission.

Kathleen B. Levitz,

Deputy Chief, Policy and Rules Division, Mass Media Bureau.

[FR Doc. 90–10124 Filed 5–1–90; 8:45 am]

BILLING CODE 6712–01–M

DEPARTMENT OF TRANSPORTATION

Federal Highway Administration

49 CFR Part 396

[FHWA Docket No. MC–90–7]

RIN 2125–AC47

Inspection, Repair and Maintenance; Brake Inspection; Request for Comments

AGENCY: Federal Highway Administration (FHWA), DOT.

ACTION: Notice of petition; request for comment.

SUMMARY: The FHWA is requesting public comment concerning a petition for reconsideration received from Rockwell-International (Rockwell) requesting that appendix G to subchapter B be amended to allow brake chambers activating the Rockwell Disc brake with automatic slack adjuster an additional one-fourth of an inch push rod travel over that allowed for similar size brake chambers activating drum type brakes.

DATES: Comments must be received on or before July 2, 1990.

ADDRESSES: Submit written, signed comments to FHWA Docket No. MC–90–7, room 4232, HCC–10, Office of the Chief Counsel, Federal Highway Administration, 400 Seventh Street, SW., Washington, DC 20590. Commenters may, in addition to submitting "hard copies" of their comments, submit a floppy disk (either 1.2Mb or 360Kb density) in a format that is compatible with either word processing programs, Word Perfect or WordStar. All comments received will be available for examination at the above address from 8:30 a.m. to 3:30 p.m., e.t., Monday through Friday, except legal holidays. Those desiring notification of receipt of comments must include a self-addressed, stamped postcard.

FOR FURTHER INFORMATION CONTACT: Mr. Robert M. Hagan, Office of Motor Carrier Standards, (202) 366–2981, or Mr. Paul Brennan, Office of the Chief Counsel, (202) 366–1350, Federal Highway Administration, Department of Transportation, 400 Seventh Street SW., Washington, DC 20590. Office hours are from 7:45 a.m. to 4:15 p.m., e.t., Monday through Friday, except legal holidays.

SUPPLEMENTARY INFORMATION: On December 7, 1988, the Federal Highway Administration published in the **Federal Register** (53 FR 49402) a final rule which was to have become effective on December 7, 1989, but subsequently was delayed to July 1, 1990 at 54 FR 50722 (December 8, 1989), requiring that every commercial motor vehicle be inspected at least annually. In this same publication the inspection standards were published as appendix G to subchapter B—Minimum Periodic Inspection Standards. These standards included the air brake readjustment limit. The appendix states, "Readjustment Limits. The maximum stroke at which brakes should be readjusted is given below. Any brake one-fourth inch or more past the readjustment limit or any two brakes less than one-fourth inch beyond the readjustment limit shall be cause for rejection * * *." The readjustment limits shown are as follows:

BOLT TYPE BRAKE CHAMBER DATA

Type	Effect. area (sq in)	Outside dia. (in)	Maximum stroke at which brakes should be adjusted
A	12	6 15/16	1 3/8
B	24	9 3/16	1 3/4
C	16	8 1/16	1 3/4
D	6	5 1/4	1 1/4
E	9	6 3/16	1 3/8
F	36	11	2 1/4
G	30	9 7/8	2

ROTOCHAMBER DATA

Type	Effect. area (sq. in)	Outside dia (in)	Maximum stroke at which brakes should be adjusted
9	9	4 9/32	1½
12	12	4 13/16	1½
16	16	5 13/32	2
20	20	5 15/16	2
24	24	6 13/32	2
30	30	7 1/16	2¼
36	36	7 5/8	2¾
50	50	8 7/8	3

CLAMP TYPE BRAKE CHAMBER DATA

Type	Effect. area (sq in)	Outside dia. (in)	Maximum stroke at which brakes should be adjusted
6	6	4¼	1¼
9	9	5¼	1⅜
12	12	5 1/16	1⅜
16	16	6⅜	1¾
20	20	6 25/32	1¾
24	24	7 7/32	1¾ [1]
30	30	8 3/32	2
36	36	9	2¼

[1] (2" for long stroke design).

Appendix G to subchapter B of chapter III of title 49, Code of Federal Regulations, was published on December 7, 1988, as part of the final rule, Inspection, Repair and Maintenance. The standards contained in Appendix G are the inspection standards to be used to meet the requirements of a periodic inspection as required by the final rule published December 7, 1988, as amended at 54 FR 50722 (December 8, 1989). As noted in the preamble to this final rule, the Appendix G standards are based on the North American Uniform Driver-Vehicle Inspection Manual (NAUDVIM) and the Out-of-Service Criteria established by the Commercial Vehicle Safety Alliance 9CVSA). The NAUDVIM and CVSA standards are used by inspection officials during roadside vehicle inspections. Because of the relationship among these standards, the FHWA anticipates that a change in one will lead to revisions in the others.

Rockwell, in its petition for reconsideration, maintains that, "Rockwell Automotive Operations has been manufacturing the Dura-Master Air Disc Break for 7 years and has, approximately, 75,000 units now in field operations in a variety of on-highway vehicles, particularly vehicles requiring the most stringent safety considerations, including fire trucks and tractor/trailer operations hauling cargos that include gasoline, liquid nitrogen and other hazardous materials."

The petitioner further maintains, "Unlike drum brakes, where the lining to drum clearance increase as the brake components heat during braking, the disc brake operates exactly the reverse. As the brakes heat, the rotor disc-to-lining clearances decrease, resulting in brake fade resistance and continued excellent braking ability. Because of this lining-to-rotor disc clearance during braking, the brake must be initially set up to operate with a greater lining-to-rotor disc clearance than a drum brake. If this extra clearance is not provided, there is a possibility during heavy braking of brake drag with resultant brake overheating and its potential serious outcome. The Rockwell automatic slack adjusters for the disc brake are, therefore, designed to allow a slightly longer stroke range than the Rockwell automatic slack adjusters that are used on drum brakes. These disc slack adjusters operate with an approximate one-fourth inch longer stroke range than their drum brake counterparts. This slightly longer stroke range assures that brake drag does not occur."

Rockwell Automative Operations requests that Appendix G to subchapter B—Minimum Periodic Inspection Standards be amended to include a maximum stroke at which brakes should be readjusted for disc brake that are one-fourth inch more than for cam brakes specifically as follows:

AIR DISC BRAKE

Chamber type	Maximum stroke at which brake should be readjusted
16	2"
20	2"
24	2"*
30	2¼"*

*2¼" long stroke design

Comments Concerning the Petition for Reconsideration

The FHWA is interested in receiving comments on the merits of this petition and is especially interested in comments regarding motor carriers, mechanics, and drivers experiences with the automatic slack adjuster for both the drum type brakes and disc type brakes. The FHWA is also interested in comments regarding the reliability of automatic slack adjusters.

Below are several questions to which the FHWA would appreciate responses. However, commenters should not limit their responses to just these questions.

1. Should Appendix G to subpart B be amended to allow the Rockwell Automotive Products' petition? (In responding to this question, it would be appreciated if the responses contained the reasoning pro or con.)

2. If the Rockwell Automotive Products' petition is granted allowing the additional one-fourth inch push rod travel on disc brakes, do you foresee any problem in enforcement? (If so, please describe the problem and your solution.)

3. If the above referenced petition is granted, do you foresee any problems in maintaining the disc brake assembly, including the automatic slack adjuster, within the requested push rod stroke?

4. Would there be any enforcement problem created by allowing a different standard between those disc brakes with automatic slack adjusters and those with manual adjusters? If there are, please advise the nature of the problem and your proposed solution.

5. Would granting the relief requested have any effect on the braking efficiency as it relates to safe stopping distance?

Regulatory Impact

The FHWA has determined that this document does not contain a major rule under Executive Order 12291 or a significant regulation under the regulatory policies and procedures of the Department of Transportation.

Based on information available, the FHWA is unable to determine whether any subsequent rulemaking would have sufficient federalism implications to warrant the preparation of a Federalism Assessment.

A regulatory information number (RIN) is assigned to each regulatory action listed in the Unified Agenda of Federal Regulations. The Regulatory Information Service Center publishes the Unified Agenda in April and October of each year. The RIN number contained in the heading of this document can be used to cross reference this action with the Unified Agenda.

List of Subjects in 49 CFR Part 396

Highway safety, Motor carriers, Motor vehicle safety, Reporting and recordkeeping requirements.

[Catalog of Federal Domestic Assistnce Program Number 20.217, Motor Carrier Safety]

Authority: Section 219 of Pub. L. 98-554, October 30, 1984, 98 Stat. 2839 (49 U.S.C. app. § 2509); 49 U.S.C. 3102; 49 CFR 1.48.

Issued on: April 24, 1990.

T.D. Larson,

Administrator.

[FR Doc. 90–10160 Filed 5–1–90; 8:45 am]

BILLING CODE 4910–22–M

DEPARTMENT OF THE INTERIOR

Fish and Wildlife Service

50 CFR Part 17

RIN 1018–AB38

Endangered and Threatened Wildlife and Plants; Proposed Threatened Status for the Gulf Sturgeon

AGENCY: Fish and Wildlife Service, Interior.

ACTION: Proposed rule.

SUMMARY: The Service proposes to determine the Gulf Sturgeon (*Acipenser oxyrhynchus desotoi*) to be a threatened species, pursuant to the Endangered Species Act of 1973 (Act), as amended. This large fish has a range that extends from Lake Pontchartrain in Louisiana to Tampa Bay in Florida. Gulf sturgeon stocks have been greatly reduced or extirpated throughout much of the historic range by overfishing and dam construction. This proposal, if made final, would implement the protection and recovery provisions afforded by the Act for the sturgeon. The Service seeks data and comments from the public on this proposal.

DATES: Comments from all interested parties must be received by July 2, 1990. Public hearing requests must be received by June 18, 1990.

ADDRESSES: Comments and materials concerning this proposal should be sent to the Field Supervisor, Jacksonville Field Office, U.S. Fish and Wildlife Service, 3100 University Boulevard South, Suite 120, Jacksonville, Florida 32216. Comments and materials received will be available for public inspection, by appointment, during normal business hours at the above address.

FOR FURTHER INFORMATION CONTACT: David J. Wesley, Field Supervisor, at the above address (904/791–2580 or FTS 946–2580).

SUPPLEMENTARY INFORMATION:

Background

The Gulf sturgeon (*Acipenser oxyrhynchus desotoi*), also known as the Gulf of Mexico sturgeon, is a subspecies of the Atlantic sturgeon (*Acipenser oxyrhynchus*). The Gulf sturgeon was described by Vladykov in 1955. It is a large, nearly cylindrical fish with an extended snout, ventral mouth, chin barbels, and with the upper lobe of the tail longer than the lower. Adults range from 1.8–2.4 meters (6–8 feet) or more in length, with adult females larger than males. The skin is scaleless, brown dorsally and pale ventrally, and imbedded with five rows of bony plates. The Gulf sturgeon has a longer head, pectoral fins, and spleen than the related Atlantic sturgeon (Huff 1975, Wooley 1985).

The following information is derived primarily from Barkuloo (1988). Historically, the Gulf sturgeon occurred from the Mississippi River to Tampa Bay, Florida. It still occurs, at least occasionally, throughout this range, but in greatly reduced numbers. The fish is essentially confined to the eastern Gulf of Mexico, possibly because this portion of the Gulf has predominately hard bottoms that are better suited to the Gulf sturgeon's feeding habits. (The western Gulf has mostly mud, clay, and silt bottom sediments.) Adult fish are bottom feeders, eating primarily invertebrates, including brachiopods, insect larvae, mollusks, worms, and crustaceans. Gulf sturgeon are anadromous, with reproduction occurring in fresh water but with most adult feeding taking place in the Gulf of Mexico and its estuaries. The fish probably return to breed in the same river system in which they hatched. Adult sturgeon enter the Apalachicola and Suwannee River systems from February through April. Spawning is believed to occur in areas of deep water and clean (rock, gravel, or sand) bottoms. The eggs are sticky and adhere in clumps or strings to snags, outcroppings, or other clean surfaces. Larvae have been collected in April and May in the Apalachicola River. Adults remain in fresh water as late as November. The adults lose weight while in fresh water but regain it while wintering in estuaries or the Gulf of Mexico. In the Suwannee River, Florida, female sturgeon require 8 to 12 years, and males 7 to 10 years, to reach sexual maturity (Huff 1975). The Gulf sturgeon, therefore, is a slow-maturing, long-lived fish.

The Gulf sturgeon has historically been of commercial importance, with the eggs used for caviar, the flesh for smoked fish, and the swim bladder yielding isinglass, a gelatin used in food products and glues. Available landing records for Gulf sturgeon indicate that the only consistent historic fisheries were in Florida and Alabama, with no directed fishing in the other Gulf States; only by-catch from other fishing. In Florida, recorded catches peaked about the turn of the century, and while fluctuating over the years, have decreased drastically since that time. The decline was initially due to overfishing, but subsequent dam construction has impacted habitat and eliminated or seriously reduced some populations in more recent years.

Service involvement with the Gulf sturgeon began with monitoring and other studies of the Apalachicola River population by the Panama City, Florida Fisheries Assistance Office in 1979. The fish was included as a category 2 species in the Service's December 30, 1982 (47 FR 58454) and September 18, 1985 (50 FR 37958) vertebrate review notices and in the January 6, 1989 (54 FR 554) animal notice of review. These notices indicated that the Gulf sturgeon was a species for which listing as threatened or endangered was possibly appropriate. In 1980, the Service's Jacksonville, Florida Area Office contracted a status survey report on the Gulf sturgeon (Hollowell 1980). The report concluded that the fish had been reduced to a small population due to overfishing and habitat loss, and that any further adverse changes would make its survival questionable. In 1988, the Service's Panama City, Florida, Fisheries Assistance Office completed a report (Barkuloo 1988) on the conservation status of the Gulf sturgeon. The report recommended that this subspecies be listed as a threatened species pursuant to the Act.

The Service and the National Marine Fisheries Service executed a Memorandum of Understanding (MOU) in 1974 regarding jurisdictional responsibilities and listing procedures under the Endangered Species Act. One of the purposes of the MOU was to define respective agency jurisdiction. Both agencies have agreed that it is in the best interest of the sturgeon to publish the listing proposal without further delay and to resolve the jurisdictional question prior to publication of the final rule.

Summary of Factors Affecting the Species

Section 4(a)(1) of the Endangered Species Act (16 U.S.C. 1531 *et seq.*) and regulations (50 CFR part 424) promulgated to implement the listing provisions of the Act set forth the procedures for adding species to the Federal list. A species may be determined to be endangered or threatened due to one or more of the five factors described in section 4(a)(1). These factors and their application to the Gulf sturgeon (*Acipenser oxyrhynchus desotoi*) are as follows:

A. The Present or Threatened Destruction, Modification, or Curtailment of Its Habitat or Range

The Gulf sturgeon formerly ranged from the Mississippi River eastward to the Tampa Bay area on the west coast of Florida. Three major rivers (the Pearl in Mississippi, the Alabama in Alabama, and the Apalachicola in Florida) within the range of the Gulf sturgeon have been dammed, preventing use of upstream areas for spawning. The Gulf sturgeon is apparently unable to pass through dam systems. Wooley and Crateau (1985) estimated that construction of the Jim Woodruff Lock and Dam on the Apalachicola River in the 1950's restricted Gulf sturgeon to 172 kilometers (107 miles) of the 1,018 kilometers (636 miles) of river habitat formerly available in the Apalachicola-Chattahoochee-Flint River system. Prior to dam construction, the Gulf sturgeon used all three rivers; subsequently the fish has been restricted to that portion of the Apalachicola River below the dam. Even if the Jim Woodruff Dam could be passed by Gulf sturgeon, the tributaries of the Apalachicola have many additional dams; 14 on the Chattahoochee and three on the Flint. A breeding population of Gulf sturgeon in Bear Creek, Bay County, Florida, was apparently extirpated due to construction of a dam in 1962.

In addition to the structures preventing Gulf sturgeon from reaching spawning areas, dredging, desnagging, and spoil deposition carried out in connection with channel improvement and maintenance represent a threat to the Gulf sturgeon. Although precise spawning areas are not known, indications are the deep holes and rock surfaces are important for spawning. Modification of such features, especially in rivers in which upstream migration is already limited by dams, could further jeopardize the already reduced stocks of the Gulf sturgeon.

The majority of the range of the Gulf sturgeon is along the panhandle and northwest peninsula coasts of Florida. Tampa Bay, Florida, was the site of the first significant fishery for the Gulf sturgeon. Fifteen hundred fish were taken when the fishery began in 1886–1887, 2,000 in 1887–1888, and only seven fish in 1888–1889, at which time the fishery ended. Only occasional Gulf sturgeon have been taken there since that time. These are believed to originate in other river systems; the Tampa Bay breeding population is considered extirpated.

The Apalachicola River population of the Gulf sturgeon supported a major fishery at the beginning of the century, but population estimates from 1883–1988 by the Service's Panama City, Florida Fisheries Assistance Office range from 60–285 fish. Any additional decline in this population could result in its extirpation. The Ochlockonee River supported a fishery until the 1950's, but no Gulf sturgeon have been reported there in recent years.

The Suwannee River is believed to support the healthiest remaining population of the Gulf sturgeon, and the population currently appears stable. Steve Carr (in Barkuloo 1988) of the Caribbean Conservation Foundation caught and released 300 Gulf sturgeon during a tagging program in 1988, and 500 in 1989. The population may have been reduced seriously following a large commercial harvest in 1983–1984, however. The Suwannee River currently has good water quality but future development in its watershed has the potential to lower water quality there.

Gulf sturgeon populations in other states are believed to remain low following overfishing and habitat change earlier in the century. Based on the limited data available, the Gulf sturgeon is rare in these states. Incidental catches of Gulf sturgeon are unusual enough in some areas to attract newspaper accounts.

Alabama formerly supported a Gulf sturgeon fishery; commercial landing records from 1927 to 1964 show a decline from a range of 2,850–15,134 pounds taken during the first five years of the fishery (1927–1931) to 100–3,500 pounds in the last five years (1960–1964). Gulf sturgeon have been taken in the Mobile River system as recently as 1986 and 1987, but captures in coastal waters have not been reported since 1980.

In Mississippi, Miranda and Jackson (1987) collected a Gulf sturgeon from the Pascagoula River in June 1987 during 30 net-nights of efforts. They reported the capture of another Gulf sturgeon on the Chickasawhay, a tributary of the Pascagoula, in 1985.

In 1988 the Louisiana Department of Wildlife and Fisheries began collecting information on Gulf sturgeon. As of March 1989, specimens had been recorded from Lake Pontchartrain (a total of six adults and subadults), Halfmoon Island (one juvenile), and the Pearl River (one adult and five juveniles). Dr. Frank Petzold of Mississippi State University caught 63 juvenile to subadult Gulf sturgeon in the Pearl River in 1985. While Miranda and Jackson took no Gulf sturgeon in that river during the 46 net-nights in June 1987, Dwight Bradshaw (pers. comm.) of Mississippi State University believes that significant numbers of Gulf sturgeon remain in the Pearl.

B. Overutilization for Commercial, Recreational, Scientific, or Educational Purposes

Although there currently is no directed fishery for Gulf sturgeon, incidental take by commercial shrimpers and gill net fishermen may be significant (Wooley and Crateau 1985). Use of turtle excluder devices (TEDS) on shrimp trawls may help reduce incidental catch.

C. Disease or Predation

Not known to be a factor.

D. The Inadequacy of Existing Regulatory Mechanisms

The Gulf sturgeon is listed as a species of special concern by the Florida Game and Fresh Water Fish Commission (title 39–27.05, Florida Administrative Code) and as an endangered species by the Mississippi Department of Wildlife, Fisheries, and Parks. Take is prohibited in both states. Take of Gulf sturgeon in Alabama is prohibited (chapter 220–2–26 of Regulations of Department of Conservation and Natural Resources), but is legal in Louisiana. There is currently no known directed fishery for the Gulf sturgeon anywhere in its range.

E. Other Natural or Manmade Factors Affecting Its Continued Existence

Since the Gulf sturgeon is slow to mature, it is unable to rapidly establish a breeding population. The fish probably return to their natal river to breed; if so, recolonization of extirpated populations from other river systems is likely to be slow.

Poor water quality may also be a threat. All major rivers in the fish's historic range have had heavy pesticide use in their watersheds, and some receive contamination from heavy metals and industrial contaminants. Several large Gulf sturgeon from Apalachicola River have been found to have potentially detrimental levels of organochlorines and heavy metals in their tissues. While the effects of these contaminants are not certain, they have the potential for being detrimental to the sturgeon's survival.

The Service has carefully assessed the best scientific and commercial information available regarding the past, present, and future threats faced by this species in determining to propose this rule. Based on this evaluation, the preferred action is to list the Gulf sturgeon as threatened. The species has declined seriously throughout its range, and has been extirpated in some

portions of that range. Although not yet an endangered species, it is likely to become one in the foreseeable future if further habitat loss or degradation occurs.

Critical Habitat

Section 4(a)(3) of the Act, as amended, requires that, to the maximum extent prudent and determinable, the Secretary propose critical habitat at the time the species is proposed to be endangered or threatened. The Service finds that designation of critical habitat is not prudent for the Gulf sturgeon. The species feeds over large areas of the Gulf of Mexico, and spawns in most of the larger rivers draining into the eastern Gulf. Each major river system in the eastern Gulf is believed to support its own breeding population. It would be impractical to designate critical habitat over this large area, and it would be misleading to designate smaller, isolated areas. The highly migratory, wide-ranging behavior of the Gulf sturgeon requires very large areas of coastal waters and these areas are not currently understood. Protection of this species' habitat will be addressed through the recovery process and through the section 7 jeopardy standard.

Available Conservation Measures

Conservation measures provided to species listed as endangered or threatened under the Endangered Species Act include recognition, recovery actions, requirements for Federal protection, and prohibitions against certain practices. Recognition through listing encourages and results in conservation actions by Federal, State, and private agencies, groups, and individuals. The Endangered Species Act provides for possible land acquisition and cooperation with the States and requires that recovery actions be carried out for all listed species. The protection required of Federal agencies and the prohibitions against taking and harm are discussed, in part, below.

Section 7(a) of the Act, as amended, requires Federal agencies to evaluate their actions with respect to any species that is proposed or listed as endangered or threatened and with respect to its critical habitat, if any is being designated. Regulations implementing this interagency cooperation provision of the Act are codified at 50 CFR part 402. Section 7(a)(4) requires Federal agencies to confer informally with the Service on any action that is likely to jeopardize the continued existence of a proposed species or result in destruction or adverse modification of proposed critical habitat. If a species is listed subsequently, section 7(a)(2) requires Federal agencies to ensure that activities they authorize, fund, or carry out are not likely to jeopardize the continued existence of such a species or to destroy or adversely modify its critical habitat. If a Federal action may affect a listed species or its critical habitat, the responsible Federal agency must enter into formal consultation with the Service.

Federal actions which are most likely to affect the Gulf sturgeon are the permitting programs and Federal water resource projects of the U.S. Army Corps of Engineers. Activities that would potentially involve section 7 of the Act include dredging of river channels, spoil deposition, and dam construction. Another potential section 7 involvement is pesticide registration by the U.S. Environmental Protection Agency.

The Act and implementing regulations found at 50 CFR 17.21 and 17.31 set forth a series of general prohibitions and exceptions that apply to all threatened wildlife. These prohibitions, in part, make it illegal for any person subject to the jurisdiction of the United States to take (includes harass, harm, pursue, hunt, shoot, wound, kill, trap, or collect; or to attempt any of these), import or export, ship in interstate commerce in the course of commercial activity, or sell or offer for sale in interstate or foreign commerce any listed species. It also is illegal to possess, sell, deliver, carry, transport, or ship any such wildlife that has been taken illegally. Certain exceptions apply to agents of the Service and State conservation agencies.

Permits may be issued to carry out otherwise prohibited activities involving threatened wildlife species under certain circumstances. Regulations governing permits are at 50 CFR 17.22, 17.23, and 17.32. Such permits are available for scientific purposes, to enhance the propagation or survival of the species, and/or for incidental take in connection with otherwise lawful activities. For threatened species, there are also permits for zoological exhibition, educational purposes, or special purposes consistent with the Act.

The Service wishes to encourage continued scientific research and conservation efforts for the Gulf sturgeon, and realizes that take will be necessary in some of this work. If the Gulf sturgeon is listed as a threatened species, take of Gulf sturgeon for scientific, enhancement, and conservation purposes will be allowed under two mechanisms. First, 50 CFR 17.31(b) allows conservation programs for threatened species, including take, to be carried out by employees and agents of the Fish and Wildlife Service, the National Marine Fisheries Services, and any state agency that is operating a conservation program pursuant to section 6(c) of the Act. Florida, Georgia, and Mississippi currently have section 6 Cooperative Agreements with the Service. Secondly, those parties wishing to carry out conservation activities for the Gulf sturgeon, but not included in the agencies listed above, would be able to apply for permission from the Service's Southeastern Regional Office (Atlanta, Georgia). If the Gulf sturgeon is listed as a threatened species, the Regional Office will request that the Gulf sturgeon be included under its regional blanket permit authority, as are most other species in the region. This will enable the Regional Office to permit take of Gulf sturgeon for scientific purposes, enhancement of survival, and other conservation purposes, pursuant to 50 CFR 17.22.

On July 1, 1975, the Atlantic sturgeon (*Acipenser oxyrhynchus*, including the Gulf sturgeon) was incldued in Appendix II of the Convention on International Trade in Endangered Species of Wild Fauna and Flora (CITES). The effect of this listing is that both export and import permits are generally required before international shipment may occur. Such shipment is strictly regulated by CITES party nations to prevent effects that my be detrimental the species' survival. Generally, the export or import cannot be allowed if it is for primarily commercial purposes.

Ongoing conservation work on the Gulf sturgeon is being done by the Service's Panama City, Florida Fisheries Assistance Office and Gainesville, Florida, National Fisheries Research Center; by the Florida Department of Natural Resources, and by the private Caribbean Conservation Corporation, funded by the Phipps Florida Foundation. The Gulf States Marine Fisheries Commission's Technical Coordinating Committee agreed in 1989 that their Anadromous Fish Subcommittee would begin preparation of a management plan for the Gulf sturgeon during 1990.

Public Comments Solicited

The Service intends that any final action resulting from this proposal will be as accurate and as effective as possible. Therefore, comments or suggestions from the public, other concerned governmental agencies, the scientific community, industry, or any

other interested party concerning this proposed rule are hereby solicited. Comments particularly are sought concerning:

(1) Biological, commercial trade, or other relevant data concerning any threat (or lack thereof) to this species;

(2) The location of any additional populations of this species and the reasons why any habitat should or should not be determined to be critical habitat as provided by section 4 of the Act;

(3) Additional information concerning the range, distribution, and population size of this species; and

(4) Current or planned activities in the subject area and their possible impacts on this species.

Final promulgation of the regulation on this species will take into consideration the comments and any additional information received by the Service, and such communications may lead to a final regulation that differs from this proposal.

The Endangered Species Act provides for a public hearing on this proposal, if requested. Requests must be received within 45 days of publication of the proposal. Such requests must be made in writing (see **Addresses** section).

National Environmental Policy Act

The Fish and Wildlife Servcie has determined that an Environmental Assessment, as defined under the authority of the National Environmental Policy Act of 1969, need not be prepared in connection with regulations adopted pursuant to section 4(a) of the Endangered Species Act of 1973, as amended. A notice outlining the Service's reasons for this determination was published in the **Federal Register** on October 25, 1983 (48 FR 49244).

References Cited

Barkuloo, J.M. 1988. Report on the conservation of the Gulf sturgeon. Unpublished report. U.S. Fish and Wildlife Service, Panama City, Florida. 33 pp.

Hollowell, J.L. 1980. Status report for the Gulf of Mexico sturgeon, *Acipenser oxyrhynchus desotoi* (Vladykov). Unpublished report prepared for U.S. Fish and Wildlife Service, Jacksonville Area Office. 9 pp.

Huff, J.S. 1975. Life history of the Gulf of Mexico sturgeon, *Acipenser oxyrhynchus desotoi,* in the Suwannee River, Florida. Mar. Res. Publ. No. 32 pp.

Vladykov, V.D. 1955. A comparison of the Atlantic sea sturgeon with a new subspecies from the Gulf of Mexico (*Acipenser oxyrhynchus desotoi*). J. Fish. Res. Board Canada 12(5):754–761.

Wooley, C.M. 1985. Evaluation of morphometric characters used in taxonomic separation of the Gulf of Mexico sturgeon, *Acipenser oxyrhynchus desotoi.* Pp. 97–113 *in* F. Binkowski and S.I. Doroshov, ed.: North American sturgeon. Developments in environmental biology of fishes, Vol. 6. W. Junk Publ., the Netherlands.

Authors

The primary authors of this proposed rule are Dr. Michael M. Bentzien (see **Addresses** Section) and Mr. James Barkuloo, U.S. Fish and Wildlife Service, 1612 June Avenue, Panama City, Florida 32401.

List of Subjects in 50 CFR Part 17

Endangered and threatened species, Fish, Marine mammals, Plants (agriculture).

Proposed Regulation Promulgation

Accordingly, it is hereby proposed to amend part 17, subchapter B of chapter I, title 50 of the Code of Federal Regulations, as set forth below:

PART 17—[AMENDED]

1. The authority citation for part 17 continues to read as follows:

Authority: 16 U.S.C. 1361–1407; 16 U.S.C. 1531–1543; 16 U.S.C. 4201–4245; Pub. L. 99–625, 100 Stat. 3500, unless otherwise noted.

2. It is proposed to amend § 17.11(h) for animals by the adding the following, in alphabetical rder under "FISHES" to the List of Endangered and Threatened Wildlife.

§ 17.11 Endangered and threatened wildlife.

* * * * *

(h) * * *

Species		Historic range	Vertebrate population where endangered or threatened	Status	When listed	Critical habitat	Special rules
Common name	Scientific name						
FISHES							
*	*	*	*	*	*	*	
Sturgeon, Gulf	*Acipenser oxyrhynchus desotoi.*	U.S.A. (AL, FL, GA, LA, MS)	Entire	T		NA	NA
*	*	*	*	*	*	*	

Dated: April 12, 1990.

Richard N. Smith,

Acting Director, Fish and Wildlife Service.

[FR Doc. 90–10178 Filed 5–1–90; 8:45 am]

BILLING CODE 4310–55–M

Notices

Federal Register
Vol. 55, No. 85
Wednesday, May 2, 1990

This section of the FEDERAL REGISTER contains documents other than rules or proposed rules that are applicable to the public. Notices of hearings and investigations, committee meetings, agency decisions and rulings, delegations of authority, filing of petitions and applications and agency statements of organization and functions are examples of documents appearing in this section.

DEPARTMENT OF AGRICULTURE

Forest Service

Vegetation Management Plan-Antelope Basin, Westfork Madison, Beaverhead National Forest, Beaverhead and Madison Counties, Montana

AGENCY: Forest Service, USDA.

ACTION: Notice of intent to prepare environmental impact statement.

SUMMARY: The Forest Service will prepare an Environmental Impact Statement (EIS) to analyze and disclose the environmental impacts of a proposal to prescribe burn approximately 1400 acres of sagebrush and associated aspen per year over a twenty year period in the Antelope Basin and Westfork Madison areas. The complete vegetation management plan will be analyzed with the initial implementation for the first five years (April 1, 1991 to May 15, 1996). This EIS will tier to the Beaverhead National Forest Land and Resource Management Plan EIS of April 1986, which provides overall guidance in achieving the desired future condition for the area. The purpose and goal of the proposed action is to produce a variety of age classes and distribution of sagebrush to provide habitat for various plants and animals adapted to various successional stages. The Forest Service is seeking additional information and comments from Federal, State, and local agencies and other individuals or organizations who may be interested in and/or affected by the proposed action. This input will be used in preparing the Draft Environmental Impact Statement (DEIS). This process will include:

1. Identification of Potential Issues.
2. Identification of issues to be analyzed in depth.
3. Elimination of insignificant issues or those which have been covered by a relevant previous environmental analysis.
4. Identification of additional reasonable alternatives.
5. Identification of potential environmental effects of the alternatives.

The agency invites written comments and suggestions on the issues and management opportunities in the area being analyzed.

DATE: Comments concerning the scope of the analysis should be received in writing by July 1, 1990 to receive timely consideration in preparation of the Draft EIS.

ADDRESSES: Submit written comments to District Ranger, Madison Ranger District, 5 Forest Service Road, Ennis, Montana 59729.

FOR FURTHER INFORMATION CONTACT: Mark Petroni, District Ranger, Ron Schott, Conservationist, or Kevin Suzuki, Range Conservationist, Beaverhead National Forest, Madison Ranger District, (406) 682–4253.

SUPPLEMENTARY INFORMATION: This is the site specific NEPA compliance for a vegetation management proposal to prescribe burn sagebrush and aspen within the Westfork of the Madison and Antelope Basin areas on the Madison R.D. of the Beaverhead National Forest. The Implementation Analysis (IA) process in these two areas identified the opportunity and need to provide for a diversity of age classes and distribution of sagebrush and aspen. The existing situation shows that of the 42,168 acres of sagebrush habitat types in the two areas, 78% (32,816 acres) is in the older successional stages (20+ years old). This is due to suppression of natural fire and spray projects done in the late 1960's and early 1970's. A vegetation management plan covering twenty years is proposed for the two areas to provide for a variety of age classes and distribution of the successional stages of sagebrush habitat types. In order to reach this desired future condition, the Madison RD is proposing to prescribe burn approximately 1,400 acres per year, over a twenty-year period, in a mosaic pattern in which 30% to 50% of the existing sagebrush is left within the burn unit. The first five years (April 1, 1991 to May 15, 1996) will be implemented initially, with continuation based on evaluation and monitoring of the ongoing project.

An initial scoping session was held on January 10, 1990, which identified preliminary issues and concerns. Three open houses were held and public comment was solicited. Another scoping session was held on March 21, 1990 to evaluate the initial public comment and refine the issues and concerns. Two main issues were identified: burning as it affects wildlife, and burning as it relates to diversity of habitat and species. The analysis will consider a range of alternatives. One of these will be the "no action" alternative, in which none of the proposed burning would be implemented. Other alternatives will examine variations in the amount burned each year (length of rotation) and variation of percentage of mosaic within units driving the alternatives.

The EIS will analyze and document the direct, indirect and cumulative environmental effects of the alternatives. Past, present and projected activities on both private and National Forest Lands will be considered. In addition, the EIS will disclose the analysis of site-specific mitigation measures and their effectiveness.

The Montana Department of Fish, Wildlife, and Parks, has been involved in this proposal and will provide site specific recommendations on each unit. Public participation will be important in the analysis and in the review of the DEIS. People are invited and encouraged to contact and/or visit with Forest Service officials at any time during the analysis and prior to the decision.

The DEIS is expected to be filed with the Environmental Protection Agency (EPA) and available for public review by December 1, 1990. At that time, the EPA will publish a Notice of Availability of the DEIS in the Federal Register. After a 45-day public comment period, the comments received will be analyzed and considered by the Forest Service in the Final Environmental Impact Statement (FEIS). The FEIS is scheduled to be completed by February 15, 1991. The Forest Service will respond in the FEIS to the comments received on the DEIS.

The Madison District Ranger, Mark Petroni, who is the responsible official for the EIS, will make a decision regarding this proposal considering the comments, responses, and environmental consequences discussed

in the FEIS and applicable laws, regulations and policies. The decision and reasons for the decision will be documented in a Record of Decision.

The comment period on the draft environmental impact statement will be 45 days from the date the Environmental Protection Agency publishes the notice of availability in the **Federal Register**. The Forest Service believes it is important to give reviewers notice at this early stage of several court rulings related to public participation in the environmental review process. First, reviewers of draft environmental impact statements must structure their participation in the environmental review of the proposal so that it is meaningful and alerts an agency to the reviewer's position and contentions. *Vermont Yankee Nuclear Power Corp.* v. *NRDC, 435 U.S. 519, 553 (1978).* Also, environmental objections that could be raised at the draft environmental impact statement stage but that are not raised until after completion of the final environmental impact statement may be waived or dismissed by the courts. *Wisconsin Heritages, Inc.* v. *Harris,* 490 F. Supp. 1334, 1338 (E.D. Wis. 1980). Because of these court rulings, it is very important that those interested in this proposed action participate by the close of the 45-day comment period so that substantive comments and objections are made available to the Forest Service at a time when it can meaningfully consider them and respond to them in the final environmental impact statement.

To assist the Forest Service in identifying and considering issues and concerns on the proposed action, comments on the draft environmental impact statement should be as specific as possible. It is also helpful if comments refer to specific pages or chapters of the draft statement. Comments may also address the adequacy of the draft environmental impact statement or the merits of the alternatives formulated and discussed in the statement. Reviewers may wish to refer to the Council on Environmental Quality Regulations for implementing the procedural provisons of the National Environmental Policy Act at 40 CFR 1503.3 in addressing these points.

Dated: April 16, 1990.

Gerald W. Alcock,

Acting Forest Supervisor, Beaverhead National Forest.

[FR Doc. 90–10161 Filed 5–1–90; 8:45 am]

BILLING CODE 3410–11–M

Environmental Impact Statement for the proposed Valbois Destination Resort Village, Special Use Permit, Boise National Forest, Valley County, ID

AGENCY: Forest Service, USDA.

ACTION: Extension of time period for public review of the Draft Environmental Impact Statement.

INFORMATION: Notice of filing a supplemental to a draft environmental impact statement for the Valbois Destination Resort Village was published in the **Federal Register** on March 30, 1990. Comments were due by May 14, 1990. The period for commenting is now extended 30 days until June 14, 1990. This extension has been granted in response to requests from a number of parties. The additional period provides needed time for parties to review and formulate comments on this large and complex proposal, while still being responsive to the developer's timeframe needs.

DATES: Comments on the DEIS must be received by June 14, 1990.

ADDRESSES: Send written comments to the Forest Supervisor, Boise National Forest, 1750 Front Street, Boise, ID 83702.

FOR FURTHER INFORMATION CONTACT: Greg Spangenberg 208–364–4104.

Dated: April 19, 1990.

Dave Rittersbacher,

Forest Supervisor.

[FR Doc. 90–10155 Filed 5–1–90; 8:45 am]

BILLING CODE 3410–11–M

Bassi, Two Peaks, and Four Corners Timber Sales, Pacific Ranger District, Eldorado National Forest

AGENCY: Forest Service, USDA.

ACTION: Revision of notice of intent to prepare an environmental impact statement.

The Notice of Intent was originally published in the **Federal Register** on November 9, 1989, page 47097. Due to changes in the program of work on the District, the date of filing the draft EIS and the scheduled date of completion of the final EIS are being revised. The new date for filing the draft EIS with the Environmental Protection Agency is December 1991. The scheduled date for completing the final EIS is changed to May 1992. Both of these dates reflect a change of 1 year from the original dates.

FOR FURTHER INFORMATION CONTACT: David Bakke, District Silviculturist, Pacific Ranger Station, Pollock Pines, California, 95726, phone 916–644–2349.

Dated: April 24, 1990.

Jerald N. Hutchins,

Forest Supervisor, Eldorado National Forest.

[FR Doc. 90–10162 Filed 5–1–90; 8:45 am]

BILLING CODE 3410–11–M

Alaska Pulp Corporation Long-Term Timber Sale, Southeast Chichagof Project Area; Tongass National Forest, Chichagof Island, AK

AGENCY: USDA, Forest Service.

ACTION: Notice of intent to prepare Environmental Impact Statement.

SUMMARY: The Forest Service will prepare and consider an Environmental Impact Statement (EIS) to evaluate a proposal to make approximately 100 million Board Feet (MMBF) of timber volume available under the Alaska Pulp Corporation contract number 12–11–010–1545. The proposed action includes road construction and timber harvesting in seventeen Value Comparison Units (VCU's) between Tenakee Inlet and Peril Straits on Chichagof Island, on the Tongass National Forest in Southeast Alaska. These seventeen VCU's are referred to as the Southeast Chichagof Project Area.

DATE: Initial comments concerning the proposal to construct roads and harvest timber in the Southeast Chichagof Project Area should be received in writing by June 1, 1990. Send requests for further information or written comments to Gordon Anderson, Planning Team Leader, USDA, Forest Service, 204 Siginaka Way, Sitka, Alaska, 99835.

SUPPLEMENTARY INFORMATION:

1. Purpose and Scope of the Decision

Providing for a continuing flow of renewable resources is the mission of the Forest Service. In addition to providing a sustained supply of wilderness, recreation, forage, wildlife, water, and fish, providing wood products to local industry is the responsibility of the USDA, Forest Service. The Southeast Chichagof Project Area is under consideration for timber harvesting and road construction to make timber available under the terms of the Alaska Pulp Corporation Long-Term Timber Sale Contract, dated January 25, 1956.

The nature of the decision to be made is whether and how to make timber available to meet contract obligations to the Alaska Pulp Corporation from the Southeast Chichagof Project Area, while also providing a combination of recreation, water, wildlife, and fish for the needs of society now and in the

future. Michael A. Barton, Regional Forester, Alaska Region, will decide: (a) How much volume to make available; (b) the location and design of timber harvest units and necessary log transfer facilities; (c) the location and design of collector and local road corridors; and (d) the mitigation measures and enhancement opportunties for all resources including timber.

The proposal includes timber volume and associated road construction to keep a timber sale operator in work for three to four operating seasons.

This would make available for harvest approximately 100 million board feet (MMBF) of timber on 3,500 to 5,000 acres and includes approximately 50 miles of road construction.

The geographic location is the southeast corner of Chichagof Island, within Tongass Land Management Plan Management Areas C29 Tenakee Inlet (VCU 227), C33 Long Bay (VCU's 228, 229), C34 Crab Bay (VCU's 230, 231, 232, 233, 234, 246), and C37 Corner Bay (VCU's 236, 239, 240, 241, 242, 243, 244, 245). The project proposal is consistent with TLMP land use designation activities, falls within the Alaska Pulp Corporation (APC) Contract Area and was scheduled for entry during the 91–95 operating period in the TLMP Winter 1985–86 Amendment.

The project area encompasses approximately 238,000 acres of land. Approximately 63,800 acres or 27 percent of the Project area, were identified by the Tongass Land Management Plan as commerical forest land scheduled for harvesting in an average 100 year time-span. Timber harvesting has occurred in all VCU's except 227, 228, 240 and 246. CCU's 228 and 229 are designated by the Tongass Land Management Plan as LUD II lands. LUD II lands are to be managed in a roadless state to retain their wildland character, with roads permitted for specifically authorized uses only. Timber harvest will not be considered in these two VCU's however, the effects of timber harvest and associated activities in adjacent VCU's will be analyzed. VCU 246 is currently included in HR 987 for wilderness designation, however current Senate deliberations on a substitute bill would remove this VCU from wilderness consideration.

Approximately 10,500 acres, of the 63,800 acres scheduled for harvest by the Tongass Land Management Plan have already been harvested; most were harvested prior to 1981. In addition, the Record of Decision (ROD) for the Final Supplement to the Environmental Impact Statements (SEIS) for the 1981–86 and 1986–90 Operating Periods scheduled approximately 2,000 acres for harvest in VCU's 236, 239, 242, and 243. If harvesting occurred as described above, approximately 47,850 acres of commerical forest land would remain available for future project planning efforts under the exisitng forest plan.

A reasonable range of alternatives will be developed, including a "No Action" alternative. The No Action alternative would constitute not constructing roads or harvesting timber volume in the Southeast Chichagof Area at the present time.

2. Scoping and Public Participation

This Notice of Intent constitutes the beginning of the scoping process which will end June 15, 1990. At the time of this notice, a scoping letter and fact sheet are being prepared for mailing to interested people, groups, and organizations. Following this initial mailing, individual contacts, meetings, and information sharing workshops will be arranged to provide opportunities for interested people, groups, and organizations to review information, and provide input throughout the EIS preparation process.

3. Timeline

A draft EIS is projected for distribution approximately 20 months from date of the Notice of Intent, or November 1991. Issuance of the Final EIS for the Southeast Chichagof Project Area is projected for April 1992.

4. Comments

Interested public are invited to comment. The comment period on the draft EIS will be 45 days from the date the Environmental Protection Agency's notice of availability appears in the **Federal Register**. It is very important that those interested in this proposed action participate at that time. To be the most helpful, comments on the draft EIS should be as specific as possible and may address the adequacy of the statement or the merits of the alternatives discussed (*see* The Council on Environmental Quality Regulations for implementing the procedural provisions of the National Environmental Policy Act at 40 CFR 1503.3).

In addition, Federal court decisions have established that reviewers of draft EIS must structure their participation in the environmental review of the proposal so that it is meaningful and alerts an agency to the reviewers' position and contentions (*Vermont Yankee Nuclear Power Corp.* v. *NRDC*, 435 U.S. 519, 553 (1978)). Environmental objections that could have been raised at the draft stage may be waived if not raised until after completion of the final EIS (*City of Angoon* v. *Hodel*, (9th Circuit, 1986) and *Wisconsin Heritages, Inc.* v. *Harris*, 490 F. Supp. 1334, 1338 (E.D. Wis. 1980)).

The reason for this is to ensure that substantive comments and objections are made available to the Forest Service at a time when it can meaningfully consider them and respond to them in the final EIS.

Following issuance of the Final EIS, the responsible official will consider the comments, responses, environmental consequences discussed in the document(s), and applicable laws, regulations, and policies, in making a decision regarding this proposal. The responsible official will document the decisions and the reasons for the decision in the Record of Decision. That decision will be subject to appeal under 36 CFR 217.

The responsible official is Michael A. Barton, Regional Forester, Alaska Region, 709 W. 9th Street, Juneau, Alaska 99802–1628.

Dated: April 19, 1990.

Michael A. Barton,

Regional Forester, Alaska Region, R10.

[FR Doc. 90–10120 Filed 5–1–90; 8:45 am]

BILLING CODE 3410–11–M

Soil Conservation Service

Lower Tri-County Watershed, AR; Intention to Deauthorize Federal Funding

AGENCY: Soil Conservation Service, USDA.

ACTION: Notice of intent to deauthorize Federal funding.

SUMMARY: Pursuant to the Watershed Protection and Flood Prevention Act, Public Law 83–566, and the Soil Conservation Guidelines (7 CFR 622), the Soil Conservation Service gives notice of the intent to deauthorize funding for the Lower Tri-County Watershed project, Independence, Lawrence, and Sharp Counties, Arkansas.

FOR FURTHER INFORMATION CONTACT: Gene Sullivan, State Conservationist, Soil Conservation Service, 700 West Capitol Avenue, room 5404, Federal Office Building, Little Rock, Arkansas 72201, telephone 501–378–5445.

SUPPLEMENTARY INFORMATION: A determination has been made by Gene Sullivan that the proposed works of improvement for the Lower Tri-County watershed project will not be installed. The sponsoring local organizations have concurred in this determination and agree that Federal funding should be

deauthorized for the project. Information regarding this determination may be obtained from Gene Sullivan, State Conservationist, at the above address and telephone number.

No administrative action on implementation of the proposed deauthorization will be taken until 60 days after the date of this publication in the **Federal Register**.

(Catalog of Federal Domestic Assistance Program No. 10.904, Watershed Protection and Flood Prevention Program. The State of Arkansas' procedure for State and local clearinghouse review of Federal and Federally assisted programs and projects is applicable)

Ronnie Murphy,

Deputy State Conservationist.

Dated: April 19, 1990.

[FR Doc. 90-10163 Filed 5-1-90; 8:45 am]

BILLING CODE 3410-16-M

DEPARTMENT OF COMMERCE

Agency Information Collection Under Review by the Office of Management and Budget (OMB)

DOC has submitted to OMB for clearance the following proposal for collection of information under the provisions of the Paperwork Reduction Act (44 U.S.C. chapter 35).

Agency: Minority Business Development Agency.

Title: 1987 Characteristics of Business Owners Survey.

Form Number: CBO-1 OMB Control Number: N/A.

Type of Request: Extension of the expiration date.

Burden: 175,000 responses; 43,750 reporting hours. Average hours per response is one quarter hour.

Needs and Uses: The information is used to provide a framework for assessing and directing existing Government programs and policies designed to promote the business activities of minorities and women and for planning and managing future programs and research efforts.

Affected Public: Individuals, and both small and large businesses.

Frequency: Mandatory.

Respondent's Obligation: Mandatory.

OMB Desk Officer: Don Arbuckle, 395-7340.

Copies of the above information collection proposal can be obtained by calling or writing DOC Clearance Officer, Edward Michals, (202) 377-3271. Department of Commerce, room 6622, 14th and Constitution Avenue NW., Washington, DC., 20230.

Written comments and recommendations for the proposed information collection should be sent to Don Arbuckle, OMB Desk Officer, room 3208, New Executive Office Building, Washington, DC 20503.

Dated: April 26, 1990.

Edward Michals,

Departmental Clearance Officer, Office of Management and Organization.

[FR Doc. 90-10132 Filed 5-1-90; 8:45 am]

BILLING CODE 3510-CW-M

Agency Form Under Review by the Office of Management and Budget (OMB)

DOC has submitted to OMB for clearance the following proposal for collection of information under the provisions of the Paperwork Reduction Act (44 U.S.C chapter 35).

Agency: Minority Business Development Agency.

Title: MBE/WBE Utilization Under Federal Grants, Cooperative Agreements, and Other Federal Financial Assistance.

Form Number: SF-334; OMB 9999-0001 and 0640-0017.

Type of Request: Renewal of a current collection.

Burden: OMB 9999-0001—456,000 respondents; 150,479 reporting hours; .33 average hours per response.

Needs and Uses: Standard form 334 is used by Federal agencies to collect data on contracts and subcontracts awarded to minority-owned businesses by recipients of Federal financial assistance and their contractors. This form satisfies the reporting requirements specified in Executive Orders 11625 and 12138.

Affected Public: Individuals or households, state or local government, businesses or other for-profit institutions, non-profit institutions, and small businesses or organizations.

Frequency: Quarterly.

Respondent's Obligation: Required to obtain or retain a benefit.

OMB Desk Officer: Don Arbuckle, 395-7340.

Copies of the above information collection proposal can be obtained by calling or writing DOC Clearance Officer, Edward Michals, 202/377-3271, Department of Commerce, room H6622, 14th and Constitution Avenue NW., Washington, DC 20230.

Written comments and recommendations for the proposed information collection should be sent to Don Arbuckle, OMB Desk Officer, room 3208 New Executive Office Building, Washington, DC 20503.

Dated: April 26, 1990.

Edward Michals,

Department Clearance Officer, Office of Management and Organization.

[FR Doc. 90-10133 Filed 5-1-90; 8:45 am]

BILLING CODE 3510-CW-M

International Trade Administration

[A-570-803]

Initiation of Antidumping Duty Investigations; Heavy Forged Hand Tools, Finished or Unfinished, With or Without Handles, From the People's Republic of China

AGENCY: Import Administration, International Trade Administration, Commerce.

ACTION: Notice.

SUMMARY: On the basis of a petition filed in proper form with the U.S. Department of Commerce (the Department), we are initiating antidumping duty investigations to determine whether imports of heavy forged hand tools, finished or unfinished, with or without handles (HFHTs), from the People's Republic of China (PRC) are being, or are likely to be, sold in the United States at less than fair value. We are notifying the U.S. International Trade Commission (ITC) of this action so that it may determine whether there is a reasonable indication that imports of HFHTs from the PRC materially injure, or threaten material injury to, a U.S. industry. If these investigations proceed normally, the ITC will make its preliminary determinations on or before May 21, 1990. If those determinations are affirmative, we will make preliminary determinations on or before September 11, 1990.

EFFECTIVE DATE: May 2, 1990.

FOR FURTHER INFORMATION CONTACT: Mary S. Clapp or V. Irene Darzenta, Office of Antidumping Investigations, Import Administration, International Trade Administration, U.S. Department of Commerce, 14th Street and Constitution Avenue NW., Washington, DC 20230; telephone (202) 377-3965 or (202) 377-0186, respectively.

SUPPLEMENTARY INFORMATION:

The Petition

On April 4, 1990, we received a petition filed in proper form by Woodings-Verona Tool Works, Inc. In compliance with the filing requirements of § 353.12 of the Department's regulations (19 CFR 353.12 (1989)), petitioner alleges that imports of HFHTs from the PRC are being, or are likely to

be, sold in the United States at less than fair value within the meaning of section 731 of the Tariff Act of 1930, as amended (the Act) (19 U.S.C. 1673), and that these imports materially injure, or threaten material injury to, the U.S. industry.

Petitioner has stated that it has standing to file the petition because it is an interested party, as defined under section 771(9)(C) of the Act, and because it has filed the petition on behalf of the U.S. industry producing the products that are subject to these investigations. If any interested party, as described under paragraph (C), (D), (E), (F), or (G) of section 771(9) of the Act, wishes to register support for, or opposition to, this petition, please file written notification with the Assistant Secretary for Import Administration.

Under the Department's regulations, any producer or reseller seeking exclusion from a potential antidumping duty order must submit its request for exclusion within 30 days of the date of the publication of this notice. The procedures and requirements regarding the filing of such requests are contained in § 353.14 of the Department's regulations.

United States Price and Foreign Market Value

Petitioner's estimate of United States Price (USP) for HFHTs is based on 1989 and 1990 sales invoices/quotes for each of the classes or kinds of merchandise, primarily from two branches of the China National Machinery Import & Export Corporation (CMC). *See* "Scope of Investigations" section of this notice for discussion of class or kind categories. According to petitioner, CMC is the major exporter of the subject merchandise to the United States. Petitioner deducted movement charges and credit expenses from the actual/quoted unit sales prices. Petitioner alleges that the unit price estimates do not include deductions for export brokerage, duty and movement charges within the PRC. Based on the information contained in the petition, it appears that sales of the subject merchandise to the United States are made on a purchase price basis since they are made prior to importation to unrelated purchasers in the United States. Therefore, we have disallowed U.S. credit expenses as a deduction to USP and have adjusted foreign market value (FMV) for these expenses.

Petitioner alleges that the PRC is a nonmarket economy country within the meaning of section 773(c) of the Act. Accordingly, petitioner based FMV on constructed value (CV). Constructed value was calculated using petitioner's factors of production valued in a market economy at a comparable level of economic development to the PRC (*i.e.*, India) for each class or kind of merchandise. According to petitioner, fine grain special bar quality steel is typically used to manufacture HFHTs. Petitioner, however, was unable to obtain price information on steel of this quality in India. As best information available, petitioner used the Japanese export price of medium quality steel bars to the PRC as representative of a relatively low, non-subsidized world market price. In its estimated calculation of CV, petitioner added amounts for factory overhead (inclusive of packing) based on its own experience. Petitioner also added the statutory minimums of ten percent for general, selling and administrative expenses, and eight percent for profit.

We compared USP to FMV based on information provided in the petition, adjusted for credit expenses as described above. Accordingly, we found margins ranging from 21.6–75.0 percent for hammers and sledges, 11.8–65.0 percent for bars and wedges, 42.0–72.3 percent for picks and mattocks, and 6.9–18.2 percent for axes and adzes.

Initiation of Investigations

Under section 732(c) of the Act, the Department must determine, within 20 days after a petition is filed, whether the petition sets forth the allegations necessary for the initiation of an antidumping duty investigation, and whether the petition contains information reasonably available to the petitioner supporting the allegations.

We examined the petition on HFHTs from the PRC and found that the petition meets the requirements of section 732(b) of the Act. Therefore, in accordance with section 732 of the Act, we are initiating antidumping duty investigations to determine whether imports of HFHTs from the PRC are being, or are likely to be, sold in the United States at less than fair value. If our investigations proceed normally, we will make our preliminary determinations by September 11, 1990.

Scope of Investigations

The United States has developed a system of tariff classification based on the international harmonized system of customs nomenclature. On January 1, 1989, the U.S. tariff schedules were fully converted to the Harmonized Tariff Schedule (HTS), as provided for in section 1201 *et seq.* of the Omnibus Trade and Competitiveness Act of 1988. All merchandise entered or withdrawn from warehouse for consumption on or after this date are being classified solely according to the appropriate HTS subheadings. The HTS subheadings are provided for convenience and U.S. Customs Service purposes. The written description remains dispositive.

We have determined for purposes of these initiations that the products covered by these investigations constitute four separate "class or kind" categories; we will thus conduct four separate investigations of these products. The four separate "class or kind" categories are the following: (1) Hammers and sledges with heads over 1.5 kg (3.25 pounds) each (hammers and sledges); (2) bars over 18 inches in length, track tools and wedges (bars and wedges); (3) picks and mattocks; and (4) axes, adzes and similar hewing tools (axes and adzes).

HFHTs include heads for drilling hammers, sledges, axes, mauls, picks and mattocks, which may or may not be painted, which may or may not be finished, or which may or may not be imported with handles; assorted bar products and track tools including wrecking bars, digging bars and tampers; and steel woodsplitting wedges. HFHTs are manufactured through a hot forge operation in which steel is sheared to required length, heated to forging temperature and formed to final shape on forging equipment using dies specific to the desired product shape and size. Depending on the product, finishing operations may include shot blasting, grinding, polishing and painting, and the insertion of handles for handled products. HFHTs are currently provided for under the following HTS subheadings: 8205.20.60, 8205.59.30, 8201.30.00, and 8201.40.60.

These investigations do not include hammers and sledges with heads 1.5 kg (3.25 pounds) in weight and under, hoes and rakes, or bars 18 inches in length and under.

Notification of ITC

Section 732(d) of the Act requires us to notify the ITC of this action and to provide it with the information we used to arrive at these determinations. We will notify the ITC and make available to it all nonprivileged and nonproprietary information. We will allow the ITC access to all privileged and business proprietary information in the Department's files, provided the ITC confirms in writing that it will not disclose such information, either publicly or under administrative protective order, without the written consent of the Deputy Assistant Secretary for Investigations, Import Administration.

Preliminary Determinations by ITC

The ITC will determine by May 21, 1990, whether there is a reasonable indication that imports of HFHTs from the PRC materially injure, or threaten material injury to, a U.S. industry. If any of its determinations are negative, the appropriate investigation(s) will be terminated; otherwise, these investigations will proceed according to the statutory and regulatory time limits.

This notice is published pursuant to section 732(c)(2) of the Act.

Dated: April 24, 1990.

Eric I. Garfinkel,

Assistant Secretary for Import Administration.

[FR Doc. 90-10139 Filed 5-1-90; 8:45 am]

BILLING CODE 3510-DS-M

Applications for Duty-Free Entry of Scientific Instruments; Brown University, et al.

Pursuant to section 6(c) of the Educational, Scientific and Cultural Materials Importation Act of 1966 (Pub. L. 89-651; 80 Stat. 897; 15 CFR part 301), we invite comments on the question of whether instruments of equivalent scientific value, for the purposes for which the instruments shown below are intended to be used, are being manufactured in the United States.

Comments must comply with Subsections 301.5(a) (3) and (4) of the regulations and be filed within 20 days with the Statutory Import Programs Staff, U.S. Department of Commerce, Washington, DC 20230. Applications may be examined between 8:30 a.m. and 5 p.m. in room 2841, U.S. Department of Commerce, 14th Street and Constitution Avenue NW., Washington, DC.

Docket Number: 90-056. *Applicant:* Brown University, Center for Advanced Materials Research, Box 1845, Providence, RI 02912. *Instrument:* Electron Microscope, Model JEM-2010 and Accessories. *Manufacturer:* JEOL, Ltd., Japan. *Intended Use:* The instrument will be used for microstructural characterization in materials-related research projects from the fields of engineering, physics, chemistry and geology. A wide range of materials and phenomena from the aforementioned fields will be studied, including materials for structural applications such as metals, ceramics and composites, materials for microelectronic applications, such as silicon, germanium, and compound semiconductors and geological materials such as minerals and rocks. Specific alloys, metal matrix composites, aluminum oxide, silicon nitride and ceramic matrix composites *Application Received by Commissioner of Customs:* April 6, 1990.

Docket Number: 90-061. *Applicant:* Baylor College of Medicine, Children's Nutrition Research Center, 1100 Bates Street, Houston, TX 77030. *Instrument:* Electron Microscope, Model C12/STEM. *Manufacturer:* N.V. Philips, The Netherlands. *Intended Use:* The instrument will be used to investigate the ways in which diet and nutritional status alter the transport of specific proteins such as apolipoproteins. These studies at a cellular level correlate similar research under way in intact human subjects. The objective of these studies is to determine how the cellular mechanisms of protein synthesis export and transport are modified. *Application Received by Commissioner of Customs:* April 11, 1990.

Docket Number: 90-062. *Applicant:* University of California, San Francisco School of Medicine, 513 Parnassus, Box 0506, San Francisco, CA 94143. *Instrument:* Electron Microscope, Model CM10. *Manufacturer:* N.V. Philips, The Netherlands. *Intended Use:* The instrument will be used to determine the pathways of synthesis and redistribution of membrane and storage organelle proteins in megakaryocytes (MK)/platelets and endothelial cells and to determine the effects of cellular activation and/or perturbation on these processes. *Application Received by Commissioner of Customs:* April 12, 1990.

Docket Number: 90-063. *Applicant:* Texas A&M Research Foundation, Box 3587, University Drive at Wellborn Road, College Station, TX 77843. *Instrument:* Deep Sea Camera with Underwater Strobe, Model DSE-6000N and Accessory. *Manufacturer:* Lobsinger Associates, Canada. *Intended Use:* The instrument will be used to determine the distribution of particles and their characteristics in different oceanic regimes. *Application Received by Commissioner of Customs:* April 12, 1990.

Docket Number: 90-064. *Applicant:* University of Texas Medical School at Houston, 6431, Fannin Street, Houston, TX 77030. *Instrument:* Electron Microscope, Model JEM-1200EXII. *Manufacturer:* JEOL, Ltd., Japan. *Intended Use:* The instrument will be used to study the ultrastructure of normal and pathological tissues from experimental animals, molecules isolated from the tissues and samples from human patients. Experiments to be conducted will consist of examination of the following:

(1) Pathological changes in heart, blood vessels, liver, kidney, intestines, genitourinary system and brain in experimental animals, primarily rat and mouse.

(2) Effects of stress (hypoxia, drugs) on isolated heart muscle cells.

(3) Isolated enzymes and other molecules.

(4) Human surgical biopsy material, including muscle and nerve biopsies.

Application Received by Commissioner of Customs: April 12, 1990.

Docket Number: 90-065. *Applicant:* Louisiana State University Medical Center, Pennington Biomedical Research Center, 6400 Perkins Road, Baton Rouge, LA 70808. *Instrument:* Mass Spectrometer, Model Delta S. *Manufacturer:* Finnigan MAT, West Germany. *Intended Use:* The instrument will be used for studies of blood, urine and saliva samples in experiments conducted to determine the energy expenditure by a new technique called Doubly Labeled Water method and to determine body composition using water labeled with stable isotopes. In addition, many metabolic processes will be studied by giving labeled compounds and following the kinetics of substrates and products, by examining the isotopic enrichment of the compounds of interest. *Application Received by Commissioner of Customs:* April 13, 1990.

Docket Number: 90-066. *Applicant:* University of Delaware, Chemical Engineering Department, Colburn Laboratory, Newark, DE 19716. *Instrument:* Surface Forces Apparatus, Model MK II PI. *Manufacturer:* Anutech Pty, Ltd., Australia. *Intended Use:* The instrument will be used for studies of the forces between surfaces separated by very small distances (Angstroms). *Application Received by Commissioner of Customs:* April 16, 1990.

Docket Number: 90-067. *Applicant:* University of Minnesota, Department of Laboratory Medicine & Pathology, 420 Delaware Street SE., Minneapolis, MN 55455. *Instrument:* Mass Spectrometer, Model API III. *Manufacturer:* Sciex, Canada. *Intended Use:* The instrument will be used for the following research projects.

(1) Quantitation of drugs and drug metabolites in biological fluids,

(2) Peptide sequencing,

(3) Molecular mass determination for proteins,

(4) Molecular mass determination for oligonucleotides,

(5) Quantitation and identification for nucleotides and nucleotide analogs and

(6) Characterization and quantitation of oligosaccharides.

Application Received by Commissioner of Customs: April 17, 1990.

Docket Number: 90–068 *Applicant:* Virginia Polytechnic Institute & State University, Department of Geological Sciences, 4044 Derring Hall, Blacksburg, VA 24061. *Instrument:* Mass Spectrometer, Model VG Sector 54. *Manufacturer:* VG Isotech, United Kingdom. *Intended Use:* The instrument will be used to analyze the isotopic composition of selected elements (Pb, Sr, Nd, Sm, U, Th, K, Ca) extracted from minerals and rocks. The objective of the investigation is a documentation of the relationship between geologic processes and the isotopic ratios of selected elements, i.e., the isotopic ratios are used to discriminate different earth processes. In addition, the instrument will be used in a two-semester course on Petrogenesis. *Application Received by Commissioner of Customs:* April 17, 1990.

Frank W. Creel,

Director, Statutory Import Programs Staff.

[FR Doc. 90–10138 Filed 5–1–90; 8:45 am]

BILLING CODE 3510–DS–M

Applications for Duty-Free Entry of Scientific Instruments; Department of Health and Human Services, et al.

Pursuant to section 6(c) of the Educational, Scientific and Cultural Materials Importation Act of 1966 (Pub. L. 89–651; 80 Stat. 897; 15 CFR part 301), we invite comments on the question of whether instruments of equivalent scientific value, for the purposes for which the instruments shown below are intended to be used, are being manufactured in the United States.

Comments must comply with subsections 301.5(a) (3) and (4) of the regulations and be filed within 20 days with the Statutory Import Programs Staff, U.S. Department of Commerce, Washington, DC 20230. Applications may be examined between 8:30 a.m. and 5 p.m. in room 2841, U.S. Department of Commerce, 14th Street and Constitution Avenue, NW., Washington, DC.

Docket Number: 90–051. *Applicant:* U.S. Department of Health & Human Services, Region VIII, room 1014, 1961 Stout Street, Denver, CO 80294. *Instrument:* Electron Microscope, Model JEM–1200EX. *Manufacturer:* JEOL, Ltd., Japan. *Intended Use:* The instrument will be used for the study of asbestos minerals and other environmental contaminants related to environmental or occupational exposure conditions from within the Federal sector. *Application Received by Commissioner of Customs:* March 30, 1990.

Docket Number: 90–052. *Applicant:* The Regents of the University of California at San Diego, Department of Neurosciences M008, La Jolla Village Drive and Gilman Drive, La Jolla, CA 92093. *Instrument:* Electron Microscope, Model JEM–4000EX/SEG. *Manufacturer:* JEOL, Ltd., Japan. *Intended Use:* The instrument will be used in a variety of research projects which include the following:

(1) Development of immunolabeling and enzyme histochemistry techniques employing semi-thin frozen sections and IVEM.

(2) Semi-thin sections as ideal specimens for IVEM immunocytochemistry.

(3) Development and adaptation of techniques for selectively contrasting and 3-dimensionally imaging subcellular complexes associated with neurons.

(4) Development of techniques for characterization of retrograde labeled neurons in layered neuropil.

(5) Development of techniques for the 3-dimensional visualization of the ultrastructure and sites of termination of specific afferent synapses and their identified postsynaptic targets.

Application Received by Commissioner of Customs: April 2, 1990.

Docket Number: 90–053. *Applicant:* University of Pennsylvania, School of Medicine, Department of Dermatology, 422 Curie Blvd., room 211, Philadelphia, PA 19104–6142. *Instrument:* Electron Microscope, Model H-7000. *Manufacturer:* Hitachi Scientific Instruments, Inc., Japan. *Intended Use:* The instrument will be used for routine ultrastructural analysis during studies of human and animal immune responses. Although it will not be used for course related purposes, the instrument will be used in the training of research fellows and research technicians in the techniques of electron microscopy. *Application Received by Commissioner of Customs:* April 3, 1990.

Docket Number: 90–054. *Applicant:* Case Western Reserve University, 2222 Circle Drive, Cleveland, OH 44106. *Instrument:* Electron Microscope, Model CEM 902/G45. *Manufacturer:* Carl Zeiss, West Germany. *Intended Use:* The instrument will be used in an ongoing malaria research project to develop a vaccine against malaria. *Application Received by Commissioner of Customs:* April 4, 1990.

Docket Number: 90–055. *Applicant:* Harvard University, Museum of Comparative Zoology, 26 Oxford Street, Cambridge, MA 02138. *Instrument:* Electron Microscope, Model H-7000-3. *Manufacturer:* Hitachi Scientific Instruments, Japan. *Intended Use:* The instrument will be used to examine a variety of biological materials including plant and animal tissues and microorganisms. The research projects will include:

(1) Study of the ultrastructural changes between larval stages in a variety of marine invertebrates.

(2) Study exploring the metabolic functions of endocytic bacteria which reside in the tissues of deep-sea marine invertebrates.

(3) Examination of circadian clocks in single-celled marine plants.

Application Received by Commissioner of Customs: April 6, 1990.

Docket Number: 90–057. *Applicant:* University of Florida, Department of Microbiology & Cell Science, Gainesville, FL 32611. *Instrument:* Electron Microscope, Model H-7000 with Accessories. *Manufacturer:* Hitachi Scientific Instruments, Japan. *Intended Use:* The instrument will be used for studies of the structures of sections of plant bacteria and animal specimens. In addition, the instrument will be used in the course PCB 6176, Biological Electron Microscopy to train independent researchers in use of the electron microscope. *Application Received by Commissioner of Customs:* April 6, 1990.

Docket Number: 90–058. *Applicant:* University of Davis, Geology Department, Davis, CA. *Instrument:* I.R. Detector (MCT), Model IMH06 for existing FTIR Machine. *Manufacturer:* Bomem, Inc., Canada. *Intended Use:* The instrument will be used for studies of common rock-forming minerals, candidates for minerals occurring in the mantle, high pressure phases, structural analogues of the previous categories and glasses with compositions mimicking those of magma. Two types of experiments will be conducted: Measurement of the single-crystal infrared spectra of a mineral and measurement of the infrared spectra of minerals as a function of pressure. In addition, the instrument will be used in the course Advanced Mineralogy, a graduate level course, to acquaint students with forefront research in minerals and to provide them with background to pursue theses in mineral physics. *Application Received by Commissioner of Customs:* April 10, 1990.

Docket Number: 90–059. *Applicant:* The Johns Hopkins University, Biology Department, Charles & 34th Streets, Baltimore, MD 21218. *Instrument:* Rapid Kinetics Spectrometer Accessory, Model RX 1000. *Manufacturer:* Applied Photophysics, United Kingdom. *Intended Use:* The instrument will be used in conjunction with an SLM 4800 phase modulation fluorescence decay

instrument to study the time course of folding and unfolding to two enzymes, S-nuclease and horse liver alcohol dehydrogenase. It will also be used to study the time course of protein DNA interactions. Finally, the instrument will be used to study the interaction of a fluorescence probe, DPH with phospholipid bilayer measurements. The instrument will also be used in the course Biological Spectroscopy to teach graduate students. *Application Received by Commissioner of Customs:* April 10, 1990.

Docket Number: 90–60. *Applicant:* Cornell University, Department of Materials Science and Engineering, Bard Hall, Ithaca, NY 14853-1501. *Instrument:* Image Furnace/Single Crystal Growing Apparatus, Model SC–N35 HS/50X. *Manufacturer:* NEC Corporation, Japan. *Intended Use:* The instrument will be used to grow single crystals of ceramic materials for basic research using zone melting or the Verneuil method. In addition, high temperature research on phase equilibria and transport properties of the materials will be performed. *Application Received by Commissioner of Customs:* April 10, 1990.

Frank W. Creel,

Director, Statutory Import Programs Staff.

[FR Doc. 90–10137 Filed 5–1–90; 8:45 am]

BILLING CODE 3510–DS–M

Minority Business Development Agency

Business Development Center Applications; State of Connecticut

AGENCY: Minority Business Development Agency.

ACTION: Notice.

SUMMARY: The Minority Business Development Agency (MBDA) announces that it is soliciting competitive applications under its Minority Business Development Center (MBDC) program to operate an MBDC for approximately a 3 year period, subject to the availability of funds. The cost of performance for the first 12 months is estimated at $184,260 in Federal funds and a minimum of $32,516 in non-Federal contributions for the budget period September 1, 1990 to August 31, 1990. Cost-sharing contributions may be in the form of cash contributions, client fees for services, in-kind contributions, or combinations thereof. The MBDC will operate in the State of Connecticut SMSA geographic service area.

The funding instrument for the MBDC will be a cooperative agreement. Competition is open to individuals, non-profit and for-profit organizations, state and local governments, American Indian tribes and educational institutions.

The MBDC program is designed to provide business development services to the minority business community for the establishment and operation of viable minority businesses. To this end, MBDA funds organizations that can coordinate and broker public and private resources on behalf of minority individuals and firms; offer a full range of management and technical assistance; and serve as a conduit of information and assistance regarding minority business.

Applications will be evaluated on the following criteria: the experience and capabilities of the firm and its staff in addressing the needs of the business community in general and, specifically, the special needs of minority businesses, individuals and organizations (50 points); the resources available to the firm in providing business development services (10 points); the firm's approach (techniques and methodology) to performing the work requirements included in the application (20 points); and the firm's estimated cost for providing such assistance (20 points). An application must receive at least 70 percent of the points assigned to any one evaluation criteria category to be considered programmatically acceptable and responsive.

MBDCs shall be required to contribute at least 15 percent of the total project cost through non-Federal contributions. Client fees for billable management and technical assistance (M&TA) rendered must be charged by MBDCs. Based on a standard rate of $50 per hour, MBDCs will charge client fees at 20 percent of the total cost for firms with gross sales of $500,000 or less and 35 percent of the total cost for firms with gross sales of over $500,000.

The MBDC may continue to operate, after the initial competitive year, for up to 2 additional budget periods. Periodic reviews culminating in year-to-date quantitative and qualitative evaluations will be conducted to determine if funding for the project should continue. Continued funding will be at the discretion of MBDA based on such factors as an MBDC's satisfactory performance, the availability of funds and Agency priorities.

CLOSING DATE: The closing date for applications is June 4, 1990. Applications must be postmarked on or before June 4, 1990.

ADDRESS: New York Regional Office, Minority Bus. Development Agency, Jacob K. Javits Federal Building, Rm. 3720, New York, New York 10278. Area Code/Telephone Number (212) 264–3262.

FOR FURTHER INFORMATION CONTACT: William R. Fuller, Regional (Acting) Director, New York Regional Office

SUPPLEMENTARY INFORMATION: Anticipated processing time of this award is 120 days. Executive Order 12372 "Intergovernmental Review of Federal Programs" is not applicable to this program. Questions concerning the preceding information, copies of application kits and applicable regulations can be obtained at the above address.

11.800 Minority Business Development (Catalog of Federal Domestic Assistance)

Dated: April 24, 1990.

William R. Fuller,

Regional Director (Acting), New York Regional Office.

[FR Doc. 90–10171 Filed 5–1–90; 8:45 am]

BILLING CODE 3510–21–M

Business Development Center Applications: Richmond, VA

AGENCY: Minority Business Development Agency, Commerce.

ACTION: Notice.

SUMMARY: The Minority Business Development Agency (MBDA) announces that it is soliciting competitive applications under its Minority Business Development Center (MBDC) Program to operate an MBDC for a 3 year period, subject to the available funds. The cost of performance for the first 12 months is estimated at $194,118 for the project performance of September 1, 1990 to August 31, 1991. The MBDC will operate in the Richmond, Virginia, Metropolitan Statistical Area (MSA). The first year cost for the MBDC will consist of $165,000 in Federal funds and a minimum of $29,118 in non-Federal funds (which can be a combination of cash, in-kind contribution and fees for services).

The funding instrument for the MBDC will be a cooperative agreement and competition is open to individuals, nonprofit and for-profit organizations, local and state governments, American Indian tribes and educational institutions.

The MBDC will provide management and technical assistance to eligible clients for the establishment and operation of businesses. The MBDC Program is designed to assist those minority businesses that have the highest potential for success. In order to accomplish this, MBDC supports MBDC

Programs that can: coordinate and broker public and private sector resources on behalf of minority individuals and firms; offer them a full range of management and technical assistance; and serve as a conduit of information and assistance regarding minority business.

Applications will be judged on the experience and capability of the firm and its staff in addressing the needs of minority business individuals and organizations; the resources available to the firm in providing management and technical assistance; the firm's proposed approach to performing the work requirements included in the application; and the firm's estimated cost for providing such assistance. It is advisable that applicants have an existing office in the geographic region for which they are applying.

The MBDC will operate for a 3-year period with periodic reviews culminating in annual evaluations to determine if funding for the project should continue. Continued funding will be at the discretion of MBDA based on such factors as an MBDC's satisfactory performance, the availability of funds, and Agency priorities.

CLOSING DATE: The closing date for applications is June 1, 1990. Applications must be postmarked on or before June 1, 1990.

ADDRESSES: Washington Regional Office, Minority Business Development Agency, U.S. Department of Commerce, room 6723, Washington, DC 20230, (202) 377–8275.

FOR FURTHER INFORMATION CONTACT: Gina A. Sanchez, Regional Director, Washington Region Office.

SUPPLEMENTARY INFORMATION: Questions concerning the preceding information, copies of application kits and applicable regulations can be obtained at the above address.

There will be a pre-bid conference on May 8, 1990 from 1 p.m. to 3 p.m. at the: Metro Chamber of Commerce, 201 East Franklin Street, Richmond, Virginia 23241–0324.

11.800 Minority Business Development (Catalog of Federal Domestic Assistance)

Dated: April 26, 1990.

Gina A. Sanchez,

Regional Director, Washington Regional Office.

[FR Doc. 90–10200 Filed 5–1–90; 8:45 am]

BILLING CODE 3510–21–M

COMMITTEE FOR THE IMPLEMENTATION OF TEXTILE AGREEMENTS

Adjustment of Import Limits for Certain Wool Textile Products Produced or Manufactured in the Czechoslovak Socialist Republic

April 26, 1990.

AGENCY: Committee for the Implementation of Textile Agreements (CITA).

ACTION: Issuing a directive to the Commissioner of Customs adjusting limits.

EFFECTIVE DATES: May 3, 1990.

FOR FURTHER INFORMATION CONTACT: Naomi Freeman, International Trade Specialist, Office of Textiles and Apparel, U.S. Department of Commerce, (202) 377–4212. For information on the quota status of these limits, refer to the Quota Status Reports posted on the bulletin boards of each Customs port or call (202) 566–5810. For information on embargoes and quota re-openings, call (202) 377–3715.

SUPPLEMENTARY INFORMATION:

Authority. Executive Order 11651 of March 3, 1972, as amended; section 204 of the Agricultural Act of 1956, as amended (7 U.S.C. 1854).

The current limit for Category 443 is being increased for carryforward and swing. The limit for Category 435 is being reduced to account for the swing being applied.

A description of the textile and apparel categories in terms of HTS numbers is available in the Correlation: Textile and Apparel Categories with the Harmonized Tariff Schedule of the United States (see **Federal Register** notice 54 FR 50797, published on December 11, 1989). Also see 54 FR 23682, published on June 2, 1989.

The letter to the Commissioner of Customs and the actions taken pursuant to it are not designed to implement all of the provisions of the bilateral agreement, but are designed to assist only in the implementation of certain of its provisions.

Ronald I. Levin,

Acting Chairman, Committee for the Implementation of Textile Agreements.

Committee for the Implementation of Textile Agreements

April 26, 1990.

Commissioner of Customs,
Department of the Treasury, Washington, DC 20229

Dear Commissioner: This directive amends, but does not cancel, the directive issued to you on May 26, 1989, by the Chairman, Committee for the Implementation of Textile Agreements. That directive concerns imports into the United States of certain wool and man-made fiber textile products, produced or manufactured in Czechoslovakia and exported during the period which began on June 1, 1989 and extends through May 31, 1990.

Effective on May 3, 1990, the directive of May 26, 1989 is amended to adjust the limits for the following categories, as provided under the provisions of the current bilateral textile agreement between the Governments of the United States and the Czechoslovak Socialist Republic:

Category	Adjusted 12-mo. limit [1]
435	6,975 dozen.
443	86,425 numbers.

[1] The limits have not been adjusted to account for any imports exported after May 31, 1989.

The Committee for the Implementation of Textile Agreements has determined that these actions taken fall within the foreign affairs exception to the rulemaking provisions of 5 U.S.C. 553(a)(1).

Sincerely,

Ronald I. Levin,

Implementation of Textile Agreements.

[FR Doc. 90–10134 Filed 5–1–90; 8:45 am]

BILLING CODE 3510–DR–M

Announcement of an Import Limit for Certain Cotton Textile Products Produced or Manufactured in El Salvador

April 26, 1990.

AGENCY: Committee for the Implementation of Textile Agreements (CITA).

ACTION: Issuing a directive to the Commissioner of Customs establishing a limit for the new agreement year.

EFFECTIVE DATE: May 3, 1990.

FOR FURTHER INFORMATION CONTACT: Naomi Freeman, International Trade Specialist, Office of Textiles and Apparel, U.S. Department of Commerce, (202) 377–4212. For information on the quota status of this limit, refer to the Quota Status Reports posted on the bulletin boards of each Customs port or call (202) 566–5810. For information on embargoes and quota re-openings, call (202) 377–3715.

SUPPLEMENTARY INFORMATION:

Authority. Executive Order 11651 of March 3, 1972, as amended; Section 204 of the Agricultural Act of 1956, as amended (7 U.S.C. 1854).

The Governments of the United States and El Salvador agreed to amend their current bilateral textile agreement to extend through December 31, 1992. In the letter published below, the

Chairman of CITA directs the Commissioner of Customs to establish a limit for Categories 300/301 for the period January 1, 1990 through December 31, 1990.

A description of the textile and apparel categories in terms of HTS numbers is available in the Correlation: Textile and Apparel Categories with the Harmonized Tariff Schedule of the United States (see **Federal Register** notice 54 FR 50797, published on December 11, 1989).

The letter to the Commissioner of Customs and the actions taken pursuant to it are not designed to implement all of the provisions of the bilateral agreement, but are designed to assist only in the implementation of certain of its provisions.

Ronald I. Levin,

Acting Chairman, Committee for the Implementation of Textile Agreements.

Committee for the Implementation of Textile Agreements

April 26, 1990.

Commissioner of Customs,
Department of the Treasury, Washington, DC 20229

Dear Commissioner: Under the terms of section 204 of the Agricultural Act of 1956, as amended (7 U.S.C. 1854); pursuant to the Bilateral Cotton Textile Agreement, effected by exchange of notes dated March 2, 1987 and April 30, 1987; between the Governments of the United States and El Salvador; and in accordance with the provisions of Executive Order 11651 of March 3, 1972, as amended, you are directed to prohibit, effective on May 3, 1990, entry into the United States for consumption and withdrawal from warehouse for consumption of cotton textile products in Categories 300/301, produced or manufactured in El Salvador and exported during the twelve-month period which begins on January 1, 1990 and extends through December 31, 1990, in excess of 4,086,867 kilograms.

Imports charged to this category limit for the period January 1, 1989 through December 31, 1989 shall be charged against the level of restraint to the extent of any unfilled balance. In the event the limit established for that period has been exhausted by previous entries, such goods shall be subject to the level set forth in this directive.

The level set forth above is subject to adjustment in the future according to the provisions of the current bilateral agreement between the Governments of the United States and the Republic of El Salvador.

In carrying out the above directions, the Commissioner of Customs should construe entry into the United States for consumption to include entry for consumption into the Commonwealth of Puerto Rico.

The Committee for the Implementation of Textile Agreements has determined that these actions fall within the foreign affairs exception to the rulemaking provisions of 5 U.S.C. 553(a)(1).

Sincerely,

Ronald I. Levin,

Acting Chairman, Committee for the Implementation of Textile Agreements.

[FR Doc. 90-10135 Filed 5-1-90; 8:45 am]

BILLING CODE 3510-DR-M

Establishing an Import Limit for Certain Silk Blend and Other Vegetable Fiber Textile Products Produced or Manufactured in the United Arab Emirates

April 26, 1990.

AGENCY: Committee for the Implementation of Textile Agreements (CITA).

ACTION: Issuing a directive to the Commissioner of Customs establishing a limit.

EFFECTIVE DATE: May 3, 1990.

FOR FURTHER INFORMATION CONTACT: Jerome Turtola, International Trade Specialist, Office of Textiles and Apparel, U.S. Department of Commerce, (202) 377-4212. For information on the quota status of this limit, refer to the Quota Status Reports posted on the bulletin boards of each Customs port or call (202) 566-5810. For information on embargoes and quota re-openings, call (202) 377-3715.

SUPPLEMENTARY INFORMATION:

Authority. Executive Order 11651 of March 3, 1972, as amended; Section 204 of the Agricultural Act of 1956, as amended (7 U.S.C. 1854).

On November 27, 1989, the Government of the United States requested consultations with the Government of the United Arab Emirates regarding silk blend and other vegetable fiber trousers, breeches and shorts in Category 847, produced or manufactured in the United Arab Emirates.

The United States Government has decided to establish a twelve-month limit on Category 847 for the period November 27, 1989 through November 26, 1990.

The United States remains committed to finding a solution concerning this category. Should such a solution be reached in consultation with the Government of the United Arab Emirates, further notice will be published in the **Federal Register.**

A description of the textile and apparel categories in terms of HTS numbers is available in the correlation: Textile and Apparel Categories with the Harmonized Tariff Schedule of the United States (see **Federal Register** notice 54 FR 50797, published on December 11, 1989). Also see 55 FR 655, published on January 8, 1990.

Ronald I. Levin,

Acting Chairman, Committee for the Implementation of Textile Agreements.

Committee for the Implementation of Textile Agreements

April 26, 1990.

Commissioner of Customs,
Department of the Treasury, Washington, DC 20229

Dear Commissioner: Under the terms of Section 204 of the Agricultural Act of 1956, as amended (7 U.S.C. 1854); and in accordance with the provisions of Executive Order 11651 of March 3, 1972, as amended, you are directed to prohibit, effective on May 3, 1990, entry into the United States for consumption and withdrawal from warehouse for consumption of silk blend and other vegetable fiber textile products in Category 847, produced or manufactured in the United Arab Emirates and exported during the period which began on November 27, 1989 and extends through November 26, 1990, in excess of 74,312 dozen.[1]

Textile products in Category 847 which have been exported to the United States prior to November 27, 1989 shall not be subject to the limit established in this directive.

Textile products in Category 847 which have been released from custody of the U.S. Customs Service under the provisions of 19 U.S.C. 1448(b) or 1484(a)(1)(A) prior to the effective date of this directive shall not be denied entry under this directive.

Also, you are directed to charge 25,573 dozen to the limit established in this directive for Category 847. These charges are for goods imported during the period November 27, 1989 through February 28, 1990.

In carrying out the above directions, the Commissioner of Customs should construe entry into the United States for consumption to include entry for consumption into the Commonwealth of Puerto Rico.

The Committee for the Implementation of Textile Agreements has determined that these actions fall within the foreign affairs exception to the rulemaking provisions of 5 U.S.C. 553(a)(1).

Sincerely,

Ronald I. Levin,

Acting Chairman, Committee for the Implementation of Textile Agreements.

[FR Doc. 90-10136 Filed 5-1-90; 8:45 am]

BILLING CODE 3510-DR-M

[1] The limit has not been adjusted to account for any imports exported after November 26, 1989.

DEPARTMENT OF DEFENSE

Department of the Navy

Intention To Prepare an Environmental Impact Statement for Possible Closure of Naval Air Facility El Centro, CA

Pursuant to section 102(2)(C) of the National Environmental Policy Act (NEPA) of 1969 as implemented by the Council on Environmental Quality regulations (40 CFR parts 1500–1508), the Department of the Navy announces its intent to prepare an Environmental Impact Statement (EIS) to evaluate the environmental effects of the possible closure of Naval Air Facility (NAF) El Centro. This action is taken pursuant to the Secretary of Defense announcement of January 29, 1990 of candidate bases to be evaluated for possible closure or realignment. This EIS will be part of a report submitted to the Congress in conjunction with the President's annual Department of Defense Budget Authorization request.

The EIS will evaluate the environmental effects of possible closure of NAF and, to the extent known, of possible relocations of some NAF facilities to other locations. it will address the No Action alternative. The EIS will not address the ultimate disposal and possible re-use options of NAF, as these possible future scenarios cannot be clearly defined. Disposal and subsequent re-use of NAF will be evaluated in subsequent environmental documentation when these issues are more defined and ripe for evaluation in accordance with NEPA.

The Navy will initiate a scoping process for the purpose of determining the scope of issues to be addressed in the EIS and for identifying the significant issues related to this action. The Navy will hold a public scoping meeting on May 17, 1990, from 7:00 pm to 10:30 pm at the County Court House, Superior Court, Department 1, 939 West Main Street, El Centro, California. This meeting will be announced in local newspapers.

A short formal presentation will precede request for public comment. Navy representatives will be available at this meeting to receive comments from the public regarding issues of concern to the public. It is important that federal, state, and local agencies and interested individuals take this opportunity to identify environmental concerns that should be addressed during the preparation of the EIS. In the interest of available time, each speaker will be asked to limit their oral comments to 5 minutes.

Agencies and the public are also invited and encouraged to provide written comment in addition to, or in lieu of, oral comments at the public meetings. To be most helpful, scoping comments should clearly describe specific issues or topics which the commentor believes the EIS should address. Written statements and/or questions regarding the scoping process should be mailed no later than 30 days from the date of this notice to Southwest Division, Naval Facilities Engineering Command, 1220 Pacific Highway, San Digeo, CA, 92132–5196, (Attn: Mr. Bob Hexom, Code 2022, telephone (619) 532–3403).

Dated: April 30, 1990.

Dennis J. Oppman,

Department of the Navy, Alternate Federal Register Liaison Officer.

[FR Doc. 90–10339 Filed 5–1–90; 8:45 am]

BILLING CODE 3810–AE–M

Intention To Prepare an Environmental Impact Statement for Possible Closure of Naval Ordnance Station Louisville, KY

Pursuant to section 102(2)(C) of the National Environmental Policy Act (NEPA) of 1969 as implemented by the Council on Environmental Quality regulations (40 CFR parts 1500–1508), the Department of the Navy announces its intent to prepare an Environmental Impact Statement (EIS) to evaluate the environmental effects of the possible closure of Naval Ordnance Station (NOS) Louisville. This action is taken pursuant to the Secretary of Defense announcement of January 29, 1990 of candidate bases to be evaluated for possible closure or realignment. This EIS will be part of a report submitted to the Congress in conjunction with the President's annual Department of Defense Budget Authorization request.

The EIS will evaluate the environmental effects of possible closure of NOS and, to the extent known, of possible relocations of some NOS facilities to other locations. It will address the No Action alternative. The EIS will not address the ultimate disposal and possible re-use options of NOS, as these possible future scenarios cannot be clearly defined. Disposal and subsequent re-use of NOS will be evaluated in subsequent environmental documentation when these issues are more defined and ripe for evaluation in accordance with NEPA.

About 2,350 personnel are employed at NOS to overhaul naval ship weapon systems. NOS consists of 142 acres of land, of which about 85 acres are classified as light to medium industrial. Potential impacts include socioeconomic impacts and management of hazardous materials resulting from the possible action.

The Navy will initiate a scoping process for the purpose of determining the scope of issues to be addressed in the EIS and for identifying the significant issues related to this action. The Navy will hold a public scoping meeting on May 17, 1990 from 6:30 p.m. to 10:00 p.m. at the Navy and Marine Corps Reserve Center at 5401 Southside Drive, Louisville, Kentucky. This meeting will be announced in local newspapers.

A short formal presentation will precede request for public comment. Navy representatives will be available at this meeting to receive comments from the public regarding issues of concern to the public. It is important that federal, state, and local agencies and interested individuals take this opportunity to identify environmental concerns that should be addressed during the preparation of the EIS. In the interest of available time, each speaker will be asked to limit their oral comments to 5 minutes.

Agencies and the public are also invited and encouraged to provide written comment in addition to, or in lieu of, oral comments at the public meetings. To be most helpful, scoping comments should clearly describe specific issues or topics which the commentor believes the EIS should address. Written statements and or questions regarding the scoping process should be mailed no later than 30 days from the date of this notice to Atlantic Division, Naval Facilities Engineering Command, Norfolk, VA 23511–6287, (Attn: Mr. James Haluska, Code 2032E1, telephone (804) 445–2307).

Dated: April 30, 1990.

Dennis J. Oppman,

Department of the Navy, Alternate Federal Register Liaison Officer.

[FR Doc. 90–10340 Filed 5–1–90; 8:45 am]

BILLING CODE 3810–AE–M

Intention To Prepare an Environmental Impact Statement for Possible Closure of Naval Shipyard Long Beach, CA

Pursuant to section 102(2)(C) of the National Environmental Policy Act (NEPA) of 1969 as implemented by the Council on Environmental Quality regulations (40 CFR parts 1500–1508), the Department of the Navy announces its intent to prepare an Environmental Impact Statement (EIS) to evaluate the environmental effects of the possible

closure of Naval Shipyard (NAVSHIPYD) Long Beach. This action is taken pursuant to the Secretary of Defense announcement of January 29, 1990 of candidate bases to be evaluated for possible closure or realignment. This EIS will be part of a report submitted to the Congress in conjunction with the President's annual Department of Defense Authorization request.

The EIS will evaluate the environmental effects of possible closure of NAVSHIPYD and, to the extent known, of possible relocations of some NAVSHIPYD facilities to other locations. It will address the No Action alternative. The EIS will not address the ultimate disposal and possible re-use options of NAVSHIPYD, as these possible future scenarios cannot be clearly defined. Disposal and subsequent re-use of NAVSHIPYD will be evaluated in subsequent environmental documentation when these issues are more defined and ripe for evaluation in accordance with NEPA.

The Navy will initiate a scoping process for the purpose of determining the scope of issues to be addressed in the EIS and for identifying the significant issues relating to this action. The Navy will hold a public scoping meeting on May 16, 1990, from 7:00 pm to 10:30 pm at the Long Beach Beach City Council Chamber, 333 West Ocean Drive, Long Beach, California. This meeting will be announced in local newspapers.

A short formal presentation will precede request for public comment. Navy representatives will be available at this meeting to receive comments from the public regarding issues of concern to the public. It is important that federal, state, and local agencies and interested individuals take this opportunity to identify environmental concerns that should be addressed during the preparation of the EIS. In the interest of available time, each speaker will be asked to limit their oral comments to 5 minutes.

Agencies and the public area also invited and encouraged to provide written comment in addition to, or in lieu of, oral comments at the public meetings. To be most helpful, scoping comments should clearly describe specific issues or topics which the commenter believes the EIS should address. Written statements and or questions regarding the scoping process should be mailed no later than 30 days from the date of this notice to Southwest Division, Naval Facilities Engineering Command, 1220 Pacific Highway, San Diego, CA, 92132–5196, (Attn: Mr. Bob Hexom, Code 2022, telephone (619) 532–3403).

Dated: April 30, 1990.

Dennis J. Oppman,

Department of the Navy, Alternate Federal Register Liaison Officer.

[FR Doc. 90–10341 Filed 5–1–90; 8:45 am]

BILLING CODE 3810–AE–M

Naval Research Advisory Committee; Closed Meeting

Pursuant to the provisions of the Federal Advisory Committee Act (5 U.S.C. App. 2), notice is hereby given that the Naval Research Advisory Committee Panel on Aviator Physical Stress will meet on May 17–18, 1990. The meeting will be held at the National Naval Medical Center, Bethesda, Maryland. The meeting will commence at 8:45 a.m. and terminate at 5 p.m. on May 17; and commence at 8:45 a.m. and terminate at 4:30 p.m. on May 18, 1990. All sessions of the meeting will be closed to the public.

The purpose of the meeting is to provide briefings for the panel members related to the assessment of the effects of physical stress generated during aviation combat maneuvers and the consequences of such stresses on short and long term mission performance. These briefings and discussions will contain classified information that is specifically authorized under criteria established by Executive Order to be kept secret in the interest of national defense and is in fact properly classified pursuant to such Executive Order. The classified and non-classified matters to be discussed are so inextricably intertwined as to preclude opening any portion of the meeting. Accordingly, the Secretary of the Navy has determined in writing that the public interest requires that all sessions of the meeting be closed to the public because they will be concerned with matters listed in section 552b(c)(1) of title 5, United States Code.

For further information concerning this meeting contact:

Commander John Hrenko, U.S. Navy, Office of Naval Research, 800 North Quincy Street, Arlington, VA 22217–5000, Telephone Number: (202) 696–4488.

Dated: April 27, 1990.

Sandra M. Kay,

Department of the Navy, Alternate Federal Register Liaison Officer.

[FR Doc. 90–10224 Filed 5–1–90; 8:45 am]

BILLING CODE 3810–AE–M

DEPARTMENT OF EDUCATION

[CFDA No.: 84.117G and 84.117Q]

The Educational Research and Development Centers Program; Change in Mission Statement in Application Package for Center on Organization and Restructuring of Schools.

The Secretary published a notice in the **Federal Register** on March 8, 1990 (55 FR 8876–77) inviting applications for new awards for the Educational Research and Development Centers Program. One of the centers to be funded under this competition is the Center on the Organization and Restructuring of Schools. The Department has made some modifications to the mission statement for this center contained in the application package that has already been distributed. The modified mission statement is now available to applicants.

Description of Change In Mission Statement: The Secretary has determined that the mission statement for this center, which describes the activities the Secretary would like the center to conduct, should include a description of an additional area of research that might be conducted by this center. This additional topic is the integration and delivery of education, health, and welfare services to children in schools.

For Copies of the Amended Mission Statement Contact

Ned Chalker, OERI, room 608E, 555 New Jersey Avenue, NW., Washington, DC 20208–5573, (202) 357–6079.

Program Authority: 20 U.S.C. 1221e.

Dated: April 25, 1990.

Christopher T. Cross,

Assistant Secretary for Educational Research and Improvement.

[FR Doc. 90–10151 Filed 5–1–90; 8:45 am]

BILLING CODE 4000–01–M

DEPARTMENT OF ENERGY

Office of Fossil Energy

[ERA Docket No. 88–56–NG]

Great Lakes Gas Transmission Co.; Authorization To Import Natural Gas From and Export Natural Gas to Canada

AGENCY: Office of Fossil Energy, DOE.

ACTION: Notice of final order authorizing importation of natural gas from Canada

and exportation of natural gas to Canada.

SUMMARY: The Office of Fossil Energy (FE) of the Department of Energy (DOE) gives notice that it has issued a final order authorizing Great Lakes Gas Transmission Company to import from Canada an additional 62,500 Mcf per day of natural gas and to subsequently export the same gas back to Canada for a total import and export authorization of 987,500 Mcf per day until November 1, 2005. The Great Lakes import/export project is part of a firm gas transportation arrangement with TransCanada PipeLines Limited (TransCanada) under which TransCanada moves gas from western Canada to markets in eastern Canada using its own pipeline facilities in combination with that of Great Lakes'.

A copy of this order is available for inspection and copying in the Office of Fuels Programs Docket room, room 3F–056, Forrestal Building, 1000 Independence Avenue SW., Washington, DC 20585, (202) 586–9478. The docket room is open between the hours of 8 a.m. and 4:30 p.m., Monday through Friday, except Federal holidays.

Issued in Washington, DC, April 25, 1990.

Clifford P. Tomaszewski,

Director, Office of Natural Gas, Office of Fuels Programs, Office of Fossil Energy.

[FR Doc. 90–10203 Filed 5–1–90; 8:45 am]

BILLING CODE 6450–01–M

Federal Energy Regulatory Commission

[Project Nos. 5146–020, et al.]

Hydroelectric Applications (City of Allentown, PA, et al.); Applications Filed With the Commission

Take notice that the following hydroelectric applications have been filed with the Commission and are available for public inspection;

1a. *Type of application:* Surrender of License.

b. *Project No.:* 5146–020.

c. *Date Filed:* February 26, 1990.

d. *Applicant:* City of Allentown, Pennsylvania.

e. *Name of Project:* Hamilton Street Dam.

f. *Location:* On the Lehigh River, Lehigh County, Pennsylvania.

g. *Filed Pursuant to:* Federal Power Act, 16 U.S.C. 791(a)–825(r).

h. *Applicant Contact:* Honorable Joseph S. Daddona, Mayor, City of Allentown, Pennsylvania, 435 Hamilton Street, Allentown, PA 18101, (215) 437–7610.

i. *FERC Contact:* Michael Dees (202) 357–0807.

j. *Comment Date:* May 21, 1990.

k. *Description of Project:* On November 3, 1987, a license was issued to construct, operate and maintain the Hamilton Street Dam Project No. 5146. The project would consist of: (a) The Hamilton Street Dam, a 14-foot-high, 490-foot-long concrete gravity dam; (b) an 82-acre reservoir; (c) a 1,700-foot-long section of the Lehigh Canal; (d) a powerhouse located adjacent to the fish ladder at the dam and containing an installed generating capacity of 200 kW; (e) a powerhouse located 1,700 feet downstream of the dam and containing an installed generating capacity of 1,830 kW; (f) the 0.46 and 6.9-kV generator leads; (g) the 2.0-MVA 9.6/12-kV 3 phase step-up transformer; (h) the 3.0-MVA 0.46/12-kV 3-phase step-up transformer; (i) the 2,600-foot-long 12-kV transmission line; (j) the 650-foot-long 12-kV transmission line; and (k) appurtenant facilities.

1. This notice also consist of the following standard paragraphs: B, C, and D2.

2a. *Type of Application:* Minor License.

b. *Project No.:* 9340–000.

c. *Date filed:* July 10, 1985, amended January 2, 1990.

d. *Applicant:* Lawrence E. and Veronica P. Smith.

e. *Name of Project:* Kezar Falls.

f. *Location:* On the Ossippee River in York and Oxford Counties, Maine.

g. *Filed Pursuant to:* Federal Power Act 16 U.S.C. 791(a)–825(r).

h. *Applicant Contact:* Mr. Andrew E. Sims, Kleinschmidt Associates, 75 Main Street, P.O Box 576, Pittsfield, ME 04967, (207) 487–3328.

i. *FERC Contact:* Michael Dees (202) 357–0807.

j. *Comment Date:* May 29, 1990.

k. *Description of Project:* The proposed project has been amended and would now consist of the existing Kezar Falls Lower Dam and Upper Dam developments and a proposed minimum flow unit at the lower dam.

The existing Kezar Falls Upper Dam site consists of: (1) An existing rock-filled timber crib dam 270 feet long with a crest elevation with flashboards of 366.7 feet USGS; (2) a concrete ogee spillway section 196 feet long with a crest elevation with flashboards of 366.7 feet USGS; (3) a 10 acre reservoir with a normal surface elevation of 366.7 feet USGA; (4) a power canal with earth embankments 720 feet long and 100 feet wide and a concrete flume 132 feet long and 33 feet wide; (5) a powerhouse, 23 feet by 37 feet, housing a 350–kW hydropower unit; (6) an existing tailrace; (7) an existing 40-foot-long transmission line; and (8) appurtenant facilities.

The existing Kezar Falls Lower Dam site would consist of: (1) an existing concrete-capped timber crib dam 290 feet long with a crest elevation with flashboards of 352.2 feet USGS; (2) a 4.5 acre reservoir with a normal surface elevation of 352.2 feet USGS; (3) a power canal with earth embankments 908 feet long by 30 to 90 feet wide; (4) a powerhouse, 38 feet by 46 feet, housing a 500-kW hydropower unit; (5) a tailrace; (6) a 125-foot-long transmission line; (7) a proposed penstock 82 feet long (8) a proposed powerhouse, 23 feet by 18 feet, housing a 150-kW hydropower unit; (9) a proposed 1,000-foot-long transmission line; and (10) appurtenant facilities.

The applicant estimates that the average annual energy generation would be 5.6 GWh and proposed to sell the energy to Central Maine Power Company.

1. *This notice also consists of the following standard paragraphs:* B, C, and D1

3 a. *Type of Filing:* Major License.

b. *Project No.:* 10703–001.

c. *Date Filed:* September 15, 1989.

d. *Applicant:* City of Centralia Light Department.

e. *Name of Project:* Yelm Hydroelectric Project.

f. *Location:* On the Nisqually River, near the town of Yelm, in Thurston, Lewis, and Pierce Counties, Washington.

g. *Filed Pursuant to:* Federal Power Act, 16 U.S.C. section 791(a)–825(r).

h. *Applicant Contacts:* Mr. William C. Cummings, Centralia City Light, 1100 North Tower Avenue, Centralia, WA 98531, (206) 736–7611. Mr. James B. Vasile, Newman and Holtzinger, P.C., 1615 L Street NW., Washington, DC 20036, (202) 955–6600.

i. *FERC Contact:* Thomas Dean, (202) 357–0841.

j. *Comment Date:* May 24, 1990.

k. *Description of project:* The existing project consists of: (1) A 20-foot-high, 166-foot-long diversion dam with a crest elevation of 334.5 feet; (2) a 105-foot-long, 8-foot-wide fishway; (3) two intake structures; (4) a 9.1-mile-long power canal with three spillways; (5) an 84-inch-diameter, 487-foot-long penstock from the power canal that bifurcates to two 60-inch-diameter, 52-foot-long penstocks at the powerhouse; (6) an 84-inch-diameter, 546-foot-long penstock from the power canal to the powerhouse; (7) a powerhouse containing three generating units with an installed capacity of 12 megawatts; (8) a 160-foot-long tailrace discharging water to the Nisqually River; (9) a 26.2-

mile-long, 69-kilovolt transmission line; and (10) appurtenant facilities. The average annual energy generation is estimated at 74.8 GWh.

1. *Purpose of Project:* Applicant uses the project power to support regional loads.

m. *This notice also consists of the following standard paragraphs:* A3, A9, B, and C.

4 a. *Type of Filing:* Major License.

b. *Project No.:* 10861–000.

c. *Date Filed:* December 7, 1989.

d. *Applicant:* Rocky Mountain Hydro, Inc.

e. *Name of Project:* Houston Power.

f. *Location:* Partially within land administrated by the Bureau of Land Management, on the Colorado River in Garfield County, Colorado.

g. *Filed Pursuant to:* Federal Power Act 16 U.S.C. 791(a)–825(r).

h. *Applicant Contact:* Mr. Michael L. Raisch, Rocky Mountain Hydro, Inc., 4065 South Roslyn Street, Denver, CO 80237, (303) 770–9191.

i. *Commission Contact:* Mr. William Roy-Harrison (202) 357–0845.

j. *Comment Date:* May 24, 1990.

k. *Description of Project:* The proposed project would consist of: (1) A 50-foot-high, 710-foot-long dam; (2) a 520-acre reservoir with a storage capacity of 7,400 acre-feet at a normal maximum operating pool elevation of 5,225 feet; (3) a powerhouse containing a generating unit with a total rated capacity of 21 MW; (4) a 3000-foot-long excavated river channel to a stilling basin; (5) a 230-kv, 4000-foot-long transmission line tying into the existing Public Service Company of Colorado; and (6) appurtenant facilities.

The applicant estimates an average annual energy generation of 87,000 MWh.

1. *This notice also consists of the following standard paragraphs:* A3, A9, B, and C.

4 a. *Type of Application:* Preliminary Permit.

b. *Project No.:* 10869–000.

c. *Date Filed:* January 19, 1990.

d. *Applicant:* Robert A. Davis, III and Michael P. O'Brien.

e. *Name of Project:* Beaverdam Creek Site Project.

f. *Location:* On Beaverdam Creek, in Elbert County, Georgia.

g. *Filed Pursuant to:* Federal Power Act 16 U.S.C. 791(a)–825(r).

h. *Applicant Contact:* Robert A. Davis, III, 390 Timber Laurel Lane Lawrenceville, GA 30243, (404) 995–0891. Michael P. O'Brien, 3910 Angora Place, Duluth, GA 30136, (404) 246–9015.

i. *FERC Contact:* Mary Golato (dmt) (202) 357–0804.

j. *Comment Date:* May 30, 1990.

k. *Description of Project:* The proposed project would consist of the following facilities: (1) An existing 20-foot-high concrete dam; (2) an exisiting reservoir approximately 5 acres in surface area with a surfact elevation of approximately 535 feet mean sea level; (3) a proposed powerhouse with a turbine generator having an installed capacity of 275 kilowatts; (4) a proposed 1-mile transmission line; and (5) appurtenant facilities. The existing dam is owned by the City of Elberton, Georgia. The applicants estimate that the average annual generation would be 2,146,320 kilowatthours and that the cost of the studies would be $2,000.00.

1. *This notice also consists of the following standard paragraphs:* A5, A7, A9, A10, B, C, and D2.

6.a. *Type of Application:* Preliminary Permit.

b. *Project No.:* 10871–000.

c. *Date filed:* January 19, 1990

d. *Applicant:* Robert A. Davis, III and Michael P. O'Brien.

e. *Name of Project:* Watson Mill Site.

f. *Location:* On the South Fork Broad River, in Oglethorpe, Georgia.

g. *Filed Pursuant to:* Federal Power Act 16 U.S.C. 791(a)—825(r).

h. *Applicant Contact:* Robert A. Davis, III, 390 Timber Laurel Lane, Lawrenceville, GA 30243, (404) 995–0891. Michael P. O'Brien, 3910 Angora Place, Duluth, GA 30136, (404) 246–9015

i. *FERC Contact:* Mary Golato (dmt) (202) 357–0804.

j. *Comment Date:* May 30, 1990.

k. *Description of Project:* The proposed project would consist of the following facilities: (1) An existing concrete dam approximately 15 feet high; (2) an existing diversion canal approximately 1,140 feet long; (3) an existing reservoir less than 5 acres with a surface elevation of approximately 575 feet mean sea level; (4) a proposed powerhouse with one turbine generator having a total installed capacity of 500 kilowatts; (5) a proposed 0.4-mile, 3-phase transmission line; and (6) appurtenant facilities. The average annual generation would be 3,902,400 kilowatthours and the cost of the studies would be $2,000,000. The dam is owned by State of Georgia.

1. *This notice also consists of the following standard paragraphs:* A5, A7, A9, A10, B, C, and D2.

7 a. *Type of Application:* Prelminary Permit.

b. *Project No.:* 10872–000.

c. *Date filed:* January 19, 1990.

d. *Applicant:* Robert A. Davis, III and Michael P. O'Brien.

e. *Name of Project:* Towaliga River Site Project.

f. *Location:* On the Towaliga River, in Monroe County, Georgia.

g. *Filed Pursuant to:* Federal Power Act 16 U.S.C. 791(a)–825(r).

h. *Applicant Contact:* Robert A. Davis, III, 390 Timber Laurel Lane, Lawrenceville, GA 30243, (404) 995–0891. Michael P. O'Brien, 3910 Angora Place Duluth, GA 30136, (404) 246–9015.

i. *FERC Contact:* Mary Golato (dmt) (202) 357–0804

j. *Comment Date:* May 30, 1990.

k. *Description of Project:* The proposed project would consist of the following facilities: (1) An existing concrete dam approximately 20 feet high; (2) an existing diversion canal approximately 1,600 feet long; (3) an existing reservoir having a surface area of 1,200 acres with a storage capacity of approximately 6,000 acre-feet at a surface elevation of approximately 730 feet mean sea level; (4) a proposed powerhouse with one turbine generator having an installed capacity of 750 kilowatts; (5) a proposed 0.75-mile, 3-phase transmission line; and (6) appurtenant facilities. The dam is owned by the State of Georgia. The average annual generation would be 5,853,600 kilowatthours, and the applicants estimate that the cost of the studies would be $2,000,000.

1. *This notice also consists of the following standard paragraphs:* A5, A7, A9, A10, B, C, and D2.

8 a. *Type of Application:* Preliminary Permit.

b. *Project No.:* 10879–000

c. *Date Filed:* January 25, 1990

d. *Applicant:* Howard Energy Company, Inc.

e. *Name of Project:* Holloway Hydro Project.

f. *Location:* On the Flint River near Flint, Genessee County, Michigan.

g. *Filed Pursuant to:* Federal Power Act 16 U.S.C. 791(a)–825(r).

h. *Applicant Contact:* Herbert Steed, 109 E. Front St., Suite 315, Traverse City, MI 49684, (616) 941–5255.

i *FERC Contact:* Ed Lee (202) 357–0809.

j. *Comment Date:* May 11, 1990

k. *Description of Project:* The proposed project would consist of: (1) The existing 3,700-foot-long and 25-foot-high earth dam; (2) existing 1,400-acre reservoir; (3) a proposed intake structure; (4) a new concrete powerhouse located south of the dam and housing two generating units for a total installed capacity of 700 kW; (5) a proposed tailrace; (6) a new 115-kV or equivalent transmission line; and (7) appurtenant facilities. The Applicant estimates that the average annual generation would be 2 GWh. The cost of

the work and studies to be performed under the permit would be $250,000. The site is owned by the City of Flint, Michigan. The Applicant proposes that all power generated will be sold to Consumers Power Company.

1. *This notice also consists of the following standard paragraphs:* A5, A7, A9, A10, B, C, and D2.

a. *Type of Application:* Preliminary Permit.

b. *Project No.:* 10881–000.

c. *Date filed:* January 30, 1990.

d. *Applicant:* Daniel Nelson Evans, Jr.

e. *Name of Project:* Whitney Mills.

f. *2Location:* On the Lawson Fork Creek in Whitney Township, Spartanburg County, South Carolina.

g. *Filed Pursuant to:* Federal Power Act 16 U.S.C. 791 (a)–825(f).

h. *Applicant Contact:* Barbara Wallace Evans, Route #2, Box 419–A, Kings Mountain, NC 28086, (704) 739–9710.

i. *FERC Contact:* Charles T. Raabe, (202) 357–0811.

j. *Comment Date:* May 26, 1990.

k. *Description of Project:* The proposed project would consist of: (1) An existing 300-foot-long, 20-foot-high masonry and stone, gravity-type dam having two vertical-sliding gates; (2) a reservoir having a 4-acre surface area and a 30-acre-foot storage capacity at normal surface elevation 705 feet MSL; (3) two existing penstocks: (4) an existing powerhouse containing a generating unit having a capacity of 225-kW operated at a 26-foot head; (5) a proposed 30-foot-long, 600-volt transmission line; and (6) appurtenant facilities. Applicant estimates that the cost of the work to be performed under the terms of the permit would be $8,750. The project estimated average annual generation is 795,600-kWh. Energy produced at the project would be sold to Duke Power Company.

l. *This notice also consists of the following standard paragraphs:* A5, A7, A9, A10, B, C, and D2.

a. *ype of Application:* Preliminary Permit.

b. *Project No.:* 10892–000.

c. *Date filed:* February 15, 1990.

d. *Applicant:* Hy Power Energy Company.

e. *Name of Project:* Inglis Dam Hydro.

f. *Location:* On the Withlacooche River in Levy County, Florida.

g. *Filed Pursuant to:* Federal Power Act 16 U.S.C. 791 (a)–825(r).

h. *Applicant Contact:* Mr. Peter C. Kissel. Esq., Baller Hammett, 1225 Eye Street NW., Suite 1200, Washington, DC 20005, (202) 682–3300.

i. *FERC Contract:* Ed Lee (202) 357–0809.

j. *Comment Date:* May 26, 1990.

k. *Description of Project:* The applicant proposes to utilize an existing dam and reservoir under the jurisdiction of the U.S. Army Corps of Engineers. The proposed project would consist of: (1) 240-foot-long and 80-foot-wide intake; (2) a powerhouse containing one 2.8-MW generating unit; (3) a tailrace; (4) a 3.5-mile-long, 12.5-kV transmission line; and (5) appurtenant facilities. Applicant estimates that the cost of the work to be performed under the terms of the permit would be $97,000 and that the project average annual energy output would be 10 GWh. Energy produced at the project would be sold to a local utility company.

l. *This notice also consists of the following standard paragraphs:* A5, A7, A9, A10, B, C, and D2.

a. *Type of Application:* Transfer of License.

b. *Project No.:* 2404–015

c. *Date filed:* March 19, 1990.

d. *Applicant:* Alpena Power Company and Thunder Bay Power Company.

e. *Name of Project:* Thunder Bay River Project.

f. *Location:* On the Thunder Bay River in Alcona, Alpena and Montmorency Counties, Michigan.

g. *Filed Pursuant to:* Federal Power Act 16 U.S.C. 791 (a)–825(r).

h. *Applicant Contact:* Mr. Stephen Fletcher, Alpena Power Company, 310 North 2nd Avenue, Alpena, MI 49707, (517) 356–2293. Mr. Roger Steed, Thunder Bay Power Company, 109 E. Front Street, #315, Traverse City, MI 49684, (616) 941–5255.

i. *FERC Contract:* Robert Bell (202) 357–0806.

j. *Comment Date:* May 29, 1990.

k. *Description of Project:* On February 13, 1968, a license was issued to Alpena Power Company (Licensee), to operate and maintain the Thunder Bay River Project No. 2404. The licensee intends to transfer the license to Thunder Bay Power Company (transferee), to facilitate the continued operation and maintenance of the project. The Transferee intends to purchase the project and agrees to accept the terms and conditions as if it were the original licensee

l. *This notice also consists of the following standard paragraphs:* B and C.

12 a. *Type of Application:* Surrender of license.

b. *Project No.:* 9734–005.

c. *Date filed:* January 03, 1990.

d. *Applicant:* Trans Mountain Construction Company.

e. *Name of Project:* Keystone.

f. *Location:* On Keystone Creek, near Dillion, in Summit County Colorado.

g. *Filed Pursuant to:* Federal Power Act, 16 U.S.C. §§ 791(a)–825(r).

h. *Applicant Contact:* Herbert C. Young, 123 S. Paradise Road, Golden, CO 80401, (303) 526–9296.

i. *FERC Contact:* Michael Spencer at (202) 357–0846.

j. *Comment Date:* May 28, 1990.

k. *Description of Proposed Action:* The proposed run-of-river project would have consisted of a small diversion structure, a 5,500-foot-long penstock, and a powerhouse. The Licensee seeks to surrender the license because the project was found to be financially unfeasible.The licensee states that no construction has been done.

l. *This notice also consists of the following standard paragraphs:* B, C, and D2.

13 a. *Type of Application:* Non-Project Use of Project Lands.

b. *Project No.:* 1494–005.

c. *Date filed:* January 30, 1990.

d. *Applicant:* Grand River Dam Authority.

e. *Name of Project:* Pensacola Dam.

f. *Location:* Duck Greek on Grand Lake in Delaware County, Oklahoma.

g. *Filed Pursuant to:* Federal Power Act, 16 U.S.C. 791(a)–825(r).

h. *Applicant Contact:* Ron Coker, General Manager, Grand River Dam Authority, P.O. Box 409, Vinita, OK 74301–0409, (918) 256–5545.

i. *FERC Contact:* John Estep, (202) 357–0654.

j. *Comment Date:* May 28, 1990.

k. *Description of Project:* The Grand River Dam Authority, licensee for the Pensacola Dam Project, requests Commission approval to permit Mr. Terry Frost to construct 118 floting boat slips at the Cherokee Yacht Club. Construction of the boating slips is part of the rehabilitation and reopening of the existing resort and restaurant at the site.

l. *This notice also consists of the following standard paragraphs:* B, C, and D2.

14 a. *Type of Application:* Minor License.

b. *Project No.:* 2622–002.

c. *Date filed:* January 26, 1990.

d. *Applicant:* International Paper Company.

e. *Name of Project:* Turner Falls.

f. *Location:* On the Turner Falls Canal off of the Connecticut River in Franklin County, Massachusetts.

g. *Filed Pursuant to:* Federal Power Act 16 U.S.C. 791 (a)–825(r).

h. *Applicant Contact:* Mr. Robert Mck. Hunziker, International Paper Company, 2 Manhattanville Road, Purchase, NY 10577, (914) 397–1540.

i. *FERC Comment Date:* Ed Lee, (tag) (202) 357–0809.

j. *Comment Date:* May 30, 1990.

k. *Description of Project* The existing operating project was issued an initial license in 1969 which will expire on February 28, 1991. The licensee has filed for a new license for the continued operation of the project with no new construction proposed. The existing project consists of: (1) Intake facilities consisting of two rack-and-pinion operated gates; (2) a steel, 8.5-foot-diameter by 30-foot-long penstock; (3) a single 937-kW generating unit located in the mill house; (4) a tailrace; and (5) appurtenant facilities. The project generates an average of 1,160 MWh per year. All project works are owned by the Applicant. The existing license originally waived sections 14 and 15 of the Federal Power Act.

l. *Purpose of Project:* Project power would continue to be utilized in the applicant's paper manufacturing system.

m. *This notice also consists of the following standard paragraphs:* B, C, and D1.

15 a. *Type of Application:* Minor License.

b. *Project No.:* 10806–000

c. *Date Filed:* June 15, 1989.

d. *Applicant:* Holyoke Economic Development and Industrial Corporation.

e. *Name of Project:* Station No. 5.

f. *Location:* On the second level canal on the west bank of the Connecticut River, Hampden County, Massachusetts.

g. *Filed Pursuant to:* Federal Power Act 16 U.S.C. 791 (a)–825(r).

h. *Applicant Contact:* Mr. Robert Bateman, City Hall, Rm. 10, Holyoke Ave., Holyoke, MA 01040, (413) 534–2200.

i. *FERC Contact:* Michael Dees, (202) 357–0807.

j. *Comment Date:* May 30, 1990.

k. *Description of Project:* The proposed project would consist of: (1) A gated intake with new trashracks located on the Second Level Canal of the Holyoke Water Power Company; (2) two 75-foot-long, 6.5-foot-diameter, steel penstocks; (3) a refurbished single-runner, vertical Kaplan turbine directly coupled to a rewound 790-kW generator; (4) a 375-foot-long, 16.5-foot-wide by 11-foot-high arched brick-lined tailrace tunnel; (5) a steel gate where the tailwater empties into the Connecticut River; (6) an interconnection with the Holyoke Gas and Electric Department's underground service line, and (7) appurtenant facilities.

1. *This notice also consists of the following standard paragraphs:* A3, A9, B, C, and D1.

m. This notice supersedes all previously issued notices for this application.

16 a. *Type of Application:* Surrender of License.

b. *Project No.:* 3657–008.

c. *Dated Filed:* March 27, 1990.

d. *Applicant:* The City of Nashville, Arkansas and the City of Broken Bow, Oklahoma.

e. *Name of Project:* Pine Creek Dam.

f. *Location:* On the Little River in McCurtain County, Oklahoma.

g. *Filed Pursuant to:* Federal Power Act 16 U.S.C. 791 (a)–825(r).

h. *Applicant Contact:* Richard H. Davis, Jr., P.O. Box 328, Jenks, OK 74037, (918) 587–3161.

i. *FERC Contact:* Charles T. Raabe, (tag) (202) 357–0811.

j. *Comment Date:* May 29, 1990.

k. *Description of Project:* The proposed project would have utilized the existing U.S. Army Corps of Engineers' Pine Creek Dam and Reservoir and would have consisted of: (1) A new 12.5-foot-diameter steel penstock, approximately 600 feet long, grouted inside the existing 13-foot-diameter outlet works conduit; (2) a new powerhouse containing a turbine-generator unit having 4,000 kW rated capacity; (3) a tailrace returning flow to the river approximately 200 feet downstream from the dam; (4) a new 69 kV transmission line, approximately 6 miles long; and (5) appurtenant facilities.

Licensee states that the project is no longer feasible. Therefore, licensee has requested that its license be terminated. The license was issued April 30, 1987, and would have expired March 31, 2037. The licensee has not commenced construction of the project.

l. *This notice also consists of the following standard paragraphs: B, C, and D2.*

Standard Paragraphs

A3. Development Application—Any qualified development applicant desiring to file a competing application must submit to the Commission, on or before the specified comment date for the particular application, a competing development application, or a notice of intent to file such an application. Submission of a timely notice of intent allows an interested person to file the competing development application no later than 120 days after the specified comment date for the particular application. Applications for preliminary permits will not be accepted in response to this notice.

A5. Preliminary Permit—Anyone desiring to file a competing application for preliminary permit for a proposed project must submit the competing application itself, or a notice of intent to file such an application, to the Commission on or before the specified comment date for the particular application (see 18 CFR 4.36). Submission of a timely notice of intent allows an interested person to file the competing preliminary permit application no later than 30 days after the specified comment date for the particular application. A competing preliminary permit application must conform with 18 CFR 4. 30(b)(1)and (9) and 4.36.

A7. Preliminary Permit—Any qualified development applicant desiring to file a competing development application must submit to the Commission, on or before the specified comment date for the particular application, either a competing development application or a notice of intent to file such an application. Submission of a timely notice of intent to file a development application allows an interested person to file the competing application no later than 120 days after the specified comment date for the particular application. A competing license application must conform with 18 CFR 4.30(b)(1) and (9) and 4.36.

A9. Notice of intent—A notice of intent must specify the exact name, business address, and telephone number of the prospective applicant, include an unequivocal statement of intent to submit, if such an application may be filed, either (1) a preliminary permit application or (2) a development application (specify which type of application), and be served on the applicant(s) named in this public notice.

A10. Proposed Scope of Studies under Permit—A preliminary permit, if issued, does not authorize construction. The term of the proposed preliminary permit would be 36 months. The work proposed under the preliminary permit would include economic analysis, preparation of preliminary engineering plans, and a study of environmental impacts. Based on the results of these studies, the Applicant would decide whether to proceed with the preparation of a development application to construct and operate the project.

B. Comments, Protests, or Motions to Intervene—Anyone may submit comments, a protest, or a motion to intervene in accordance with the requirements of the Rules of Practice and Procedure, 18 CFR 385.210, 385.211, 385.214. In determining the appropriate action to take, the Commission will consider all protests or other comments filed, but only those who file a motion to intervene in accordance with the Commission's Rules may become a

party to the proceeding. Any comments, protests, or motions to intervene must be received on or before the specified comment date for the particular application.

C. Filing and Service of Respsonsive Documents—Any filings must bear in all capital letters the title "COMMENTS", "NOTICE OF INTENT TO FILE COMPETING APPLICATION", "COMPETING APPLICATION", "PROTEST", "MOTION TO INTERVENE", as applicable, and the Project Number of the particular application to which the filing refers. Any of the above-named documents must be filed by providing the original and the number of copies provided by the Commission's regulations to: The Secretary, Federal Energy Regulatory Commission, 825 North Capitol Street, N.E., Washington, D.C. 20426. An additional copy must be sent to Dean Shumway, Director, Division of Project Review, Federal Energy Regulatory Commission, Room 1027 (810 1st), at the above-mentioned address. A copy of any notice of intent, competing application or motion to intervene must also be served upon each representative of the Applicant specified in the particular application.

D1. Agency Comments—States, agencies established pursuant to federal law that have the authority to prepare a comprehensive plan for improving, developing, and conserving a waterway affected by the project, federal and state agencies exercising administration over fish and wildlife, flood control, navigation, irrigation, recreation, cultural or other relevant resources of the state in which the project is located, and affected Indian tribes are requested to provide comments and recommendations for terms and conditions pursuant to the Federal Power Act as amended by the Electric Consumers Protection Act of 1986, the Fish and Wildlife Coordination Act, the Endangered Species Act, the National Historic Preservation Act, the Historical and Archeological Preservation Act, the National Environmental Policy Act, Pub. L. No. 88–29, and other applicable statutes. Recommended terms and conditions must be based on supporting technical data filed with the Commission along with the recommendations, in order to comply with the requirement in section 313(b) of the Federal Power Act, 16 U.S.C. 8251(b), that Commission findings as to facts must be supported by substantial evidence.

All other federal, state, and local agencies that receive this notice through direct mailing from the Commission are requested to provide comments pursuant to the statutes listed above. No other formal requests will be made. Responses should be confined to substantive issues relevant to the issuance of a license. A copy of the application may be obtained directly from the applicant. If an agency does not respond to the Commission within the time set for filing, it will be presumed to have no comments. One copy of an agency's response must also be sent to the Applicant's representatives.

D2. Agency Comments—Federal, state, and local agencies are invited to file comments on the described application. A copy of the application may be obtained by agencies directly from the Applicant. If an agency does not file comments within the time specified for filing comments, it will be presumed to have no comments. One copy of an agency's comments must also be sent to the Applicant's representatives.

Dated: April 26, 1990, Washington, DC.

Lois D. Cashell,

Secretary.

[FR Doc. 90–10128 Filed 5–1–90; 8:45 am]

BILLING CODE 6717–01–M

Application Filed With the Commission

April 26, 1990.

Take notice that the following hydroelectric application has been filed with the Federal Energy Regulatory Commission and is available for public inspection.

a. *Type of Application:* Amendment of License.

b. *Project No.:* 9885–016.

c. *Date Filed:* April 3, 1990.

d. *Applicant:* Environmental Energy Company.

e. *Name of Project:* Falls River.

f. *Location:* On Falls River near Ashton in T9N, R44E, Boise Meridan, Fremont County, Idaho.

g. *Filed Pursuant to:* Federal Power Act, 16 U.S.C. 791(a)–825(r).

h. *Contact Person:* Mr. Grant Durtschi, P.O. Box 502, Driggs, ID 83422, (208) 522–8069.

i. *FERC Contact:* Ms. Julie Bernt, (202) 357–0839.

j. *Comment Date:* May 24, 1990.

k. *Description of Project:* A license for Project No. 9885 as issued on May 25, 1989. The license proposes to amend the license by installing two generators each rated at 4,550 kW in lieu of one generator rated at 3,000 kW and one generator rated at 4,550 kW. The total installed capacity would change from 7.5 MW to 9.1 MW. There are no other proposed changes to the license.

l. *Purpose of Project:* The power produced would be sold to Utah Power and Light Company.

m. *This notice also consists of the following standard paragraphs:* B. & C.

Standard Paragraphs

B. Comments, Protests, or Motions to Intervene—Anyone may submit comments, a protest, or a motion to intervene in accordance with the requirements of the Rules of Practice and Procedure, 18 CFR 385.210, 385.211, 385.214. In determining the appropriate action to take, the Commission will consider all protests or other comments filed, but only those who file a motion to intervene in accordance with the Commission's Rules may become a party to the proceeding. Any comments, protests, or motions to intervene must be received on or before the specified comment date for the particular application.

C. Filing and Service of Responsive Documents—Any filings must bear in all capital letters the title "COMMENTS," "RECOMMENDATIONS FOR TERMS AND CONDITIONS," "NOTICE OF INTENT TO FILE COMPETING APPLICATION," "COMPETING APPLICATIONS," "PROTEST" or "MOTION TO INTERVENE," as applicable, and the project number of the particular application to which the filing is in response. Any of these documents must be filed by providing the original and the number of copies required by the Commission's regulations to: the Secretary, Federal Energy Regulatory Commission, 825 North Capitol Street, NE., Washington, DC 20426. An additional copy must be sent to: the Director, Division of Project Review, Office of Hydropower Licensing, Federal Energy Regulatory Commission, Room 204–RB, at the above address. A copy of any notice of intent, competing application, or motion to intervene must also be served upon each representative of the applicant specified in the particular application.

Lois D. Cashell,

Secretary.

[FR Doc. 90–10131 Filed 5–1–90; 8:45 am]

BILLING CODE 6717–01–M

[Docket No. ER90–324–000]

Florida Power & Light Co; Filing

April 25, 1990.

Take notice that on April 19, 1990, Florida Power & Light Company (FPL) tendered for filing revised Exhibits A to the Service Agreements for the following entities currently receiving Sales for

Resale Partial Requirements Service: Florida Keys Electric Cooperative Association, Inc.; Fort Pierce Utilities Authority, City of Homestead; Utilities Commission, City of New Smyrna Beach; City of Starke; and City of Vero Beach. FPL requests an effective date of May 29, 1990.

Also included in the filing were two revised Exhibits A to:

(1) Partial Requirements Service Agreement among Florida Power & Light Company, the Municipal Power Agency and the City of Jacksonville Beach.

(2) Partial Requirements Service Agreement among Florida Power & Light Company, the Florida Municipal Power Agency and the City of Green Cove Springs.

FPL requests that these two Exhibits become effective June 1, 1990.

Any person desiring to be heard or to protest said filing should file a motion to intervene or protest with the Federal Energy Regulatory Commission, 825 North Capitol Street NE., Washington, DC 20426, in accordance with Rules 211 and 214 of the Commission's Rules of Practice and Procedure (18 CFR sections 385.211, 385.214). All such motions or protests should be filed on or before May 9, 1990. Protests will be considered by the Commission in determining the appropriate action to be taken, but will not serve to make any protestants parties to the proceeding. Any person wishing to become a party must file a motion to intervene. Copies of this filing are on file with the Commission and are available for public inspection.

Lois D. Cashell,

Secretary.

[FR Doc. 90-10129 Filed 5-1-90; 8:45 am]

BILLING CODE 6717-01-M

[Docket No. TQ90-9-51-000]

Great Lakes Gas Transmission Co.; Proposed Changes in FERC Gas Tariff Purchased Gas Adjustment Clause Provisions

April 25, 1990.

Take notice that Great Lakes Gas Transmission Company ("Great Lakes") on April 20, 1990, tendered for filing First Revised Sixth Revised Substitute First Revised Twenty-Fifth Revised Sheet Nos. 57(i) and 57(ii) and First Revised Fifth Revised Substitute First Revised Eleventh Revised Sheet No. 57(v) to its FERC Gas Tariff, First Revised Volume No. 1.

The above tariff sheets reflected revised current PGA rates for the month of April 1990. The tariff sheets were filed as an Out of Cycle PGA to reflect the latest estimated gas cost as provided to Great Lakes by its sole supplier of natural gas, TransCanada PipeLines Limited ("TransCanada"). These pricing arrangements were the result of contract renegotiation between each of Great Lakes' resale customers and the supplier.

Great Lakes requested waiver of the notice requirements of the provisions of § 154.309 of the Commission's Regulations and any other necessary waivers so as to permit the above tariff sheets to become effective April 1, 1990, in order to implement the gas pricing agreements between Great Lakes' resale customers and TransCanada on a timely basis.

Any person desiring to be heard or to protest said filing should file a Motion to Intervene or protest with the Federal Energy Regulatory Commission, 825 North Capitol Street, NE., Washington, DC 20426, in accordance with Rules 211 and 214 of the Commission's Rules of Practice and Procedure. All such petitions or protests should be filed on or before May 3, 1990. Protests will be considered by the Commission in determining the appropriate action to be taken, but will not serve to make protestants parties to the proceeding. Copies of this filing are on file with the Commission and are available for public inspection in the Public Reference Room.

Lois D. Cashell,

Secretary.

[FR Doc. 90-10130 Filed 5-1-90; 8:45 am]

BILLING CODE 6717-01-M

Office of Hearings and Appeals

Issuance of Decisions and Orders; Week of January 29 Through February 2, 1990

During the week of January 29 through February 2, 1990, the decisions and orders summarized below were issued with respect to appeals and applications for other relief filed with the Office of Hearings and Appeals of the Department of Energy. The following summary also contains a list of submissions that were dismissed by the Office of Hearings and Appeals.

Appeals

Lloyd R. Makey, 01/30/90, LFA-0019

Lloyd R. Makey filed an Appeal from a denial by the Inspector General (IG) of a Request for Information that he had submitted under the Freedom of Information Act. In considering the Appeal, the DOE found that under Exemption 7(c) the IG had correctly withheld most of the names and personal identifiers contained in its response. The DOE determined, however, that certain non-identifying information and the initials of administrative personnel were not properly withheld. Accordingly, the Decision and Order directed the IG to either release the incorrectly withheld information or issued a new determination consistent with the criteria set forth in the Decision and Order. Also, upon further review by the IG, additional information was released as an appendix to the Decision and Order.

Stanley Goldberg, 01/30/90, LFA-0018

Mr. Stanley Goldberg filed an Appeal from a denial by the Office Administrtive Services (OAS) of the Department of Energy of a Request for Information which he submitted under the Freedom of Information Act. Mr. Goldberg requested a copy of enclosures to a document entitled "Report by the Joint Proof-Test Committee to the Joint Chiefs of Staff on Armed Forces Participation in Proof Testing Operations for Atomic Weapons." In considering the Appeal, the DOE found that the OAS's search for documents responsive to Mr. Goldberg's request was adequate and that no such documents exist that are in the possession of the DOE. Accordingly, Mr. Goldberg's Appeal was denied.

Remedial Order

Merit Petroleum Co., Inc., et al., 01/31/90, KRO-0530

Merit Petroleum, Inc. (Merit), Thomas H. Battle (Battle) and Anton E. Meduna (Meduna) filed Statements of Objections to a Proposed Remedial Order (PRO) in which the Economic Regulatory Administration (ERA) alleged that Merit violated 10 CFR 212.186 (the layering regulation) by selling crude oil without performing any service or other function traditionally associated with the resale of crude oil. The OHA rejected respondents' argument that Merit's crude oil trading activities did not constitute purchases and sales of crude oil for purposes of the DOE reseller restrictions and found that the respondents had presented no evidence that Merit had provided traditional and historical reseller services to its customers. With respect to the liability of Battle and Meduna, the DOE found that both were central figures in the transactions at issue in the PRO and that their liability was not dependent on a finding of intentional wrongdoing. Finally, the DOE modified the PRO in accordance with the ERA's request to reduce the potential liability of Battle and Meduna to conform to their

respective shares of ownership in Merit at the time that the alleged overcharges occurred. The amount of the overcharges sustained in the Decision and Order is $48,290,793.17.

Refund Applications

Burkie Dix Jr., 02/02/90, RA272–21

The DOE issued a Supplemental Order granting Burkie Dix an additional refund of $131 in the subpart V crude oil refund proceeding.

Chicago Pacific Corp., 01/30/90, RF272–16017, RD272–16017

The DOE issued a Decision and Order considering a subpart V crude oil refund application filed by Chicago Pacific Corp., a railroad company. The firm had already been approved for a refund from the Rail and Water Transporters (RWT) escrow created by the Stripper Well Settlement Agreement. In connection with the RWT refund application, the firm waived its right to a subpart V crude oil refund. Accordingly, the application was dismissed. A Motion for Discovery filed by a group of States was also dismissed.

Edward Wolf and Sons, Inc., 01/30/90, FR272–7352

The DOE issued a Decision and Order denying an Application for Refund filed by Edward Wolf and Sons, Inc. in the subpart V crude oil refund proceeding. The applicant was a reseller of petroleum and did not demonstrate that it was injured due to crude oil overcharges.

Exxon Corporation/Bob Jones Exxon, 01/29/90, RF307–10092

The DOE issued a Decision and Order rescinding a duplicate refund of $188 granted to Bob Jones Exxon in the Exxon Corporation special refund proceeding.

Exxon Corporation/McCollough's Exxon et al., 02/01/90, RF307–3979 et al.

The DOE issued a Decision and Order concerning 12 Applications for Refund filed in the Exxon Corporation special refund proceeding. Each of the applicants was an indirect purchaser of Exxon products whose supplier, the direct purchaser of Exxon products, did not demonstate injury in this proceeding. Each applicant was a retailer whose allocable share is less than $5,000 or an end-use of Exxon products. The DOE determined that each applicant was eligible to receive a refund equal to its full allocable share. The sum of the refunds granted in this Decision is $10,346 ($8,199 principal plus $2,147 interest).

Exxon Corporation/T & R Oil Company, 02/01/90, RF307–8632

The DOE issued a Decision and Order concerning an Application for Refund filed by T & R Oil Company (T & R) in the Exxon Corporation special refund proceeding. T & R was a reseller of Exxon products that elected to limit its claim to $5,000. However, since an affiliate of T & R had already received a principal refund of $932, only $4,068 in principal was granted to the applicant in this case. Accordingly, the total refund granted in this Decision is $5,133 ($4,068 principal plus $1,065 interest).

Gulf Oil Corporation/Amerada Hess Corporation, 01/30/90, RF300–10525

The DOE issued a Decision and Order concerning the Application for Refund submitted in the Gulf Oil Corporation special refund proceeding by Amerada Hess Corporation. The application was approved under the 40 percent presumption of injury. The refund granted in this Decision, including interest, is $24,795.

Gulf Oil Corporation/Anna L. Berry, 01/30/90, RF300–10967

The DOE issued a Supplemental Order rescinding a duplicate refund of $3,080 issued to Anna L. Berry of Southwire Company, in the Gulf Oil Corporation special refund proceeding and directing the DOE's Controller not to disburse that duplicate sum to the claimant.

Gulf Oil Corporation/Concord Service Station, 01/31/90, RF300–10968

The DOE issued a Supplemental Order rescinding a duplicate refund to Concord Service Station in the Gulf Oil Corporation special refund proceeding and requiring the applicant to remit the duplicate amount ($1,106) to the Department of Energy.

Gulf Oil Corporation/Service Oil Company, 01/31/90, RF300–10971

The DOE issued a Supplemental Order correcting a refund issued to Service Oil Company in the Gulf Oil Corporation special refund proceeding. The corrected refund, which includes principal and interest, is $6,032.

Gulf Oil Corporation/Tesoro Petroleum Corporation, 01/29/90, RF300–9640

The DOE issued a Decision and Order concerning an Application for Refund submitted in the Gulf Oil Corporation special refund proceeding by Tesoro Petroleum Corporation. The Application was granted using a presumption of injury. The total refund granted in this Decision, including accrued interest, is $26,739.

John M. Herbst, Inc. et al., 01/31/90, RF272–53586 et al.

The DOE issued a Decision and Order concerning 15 Applications for Refund filed in the crude oil overcharge refund proceeding. All of the applicants were resellers or retailers of refined petroleum products and none demonstrated that it was unable to pass through the effects of crude oil overcharges to its customers. Accordingly, the Applications for Refund were denied.

Lee Way Motor Freight, Inc. et al., 01/31/90, RF272–25377 et al. RD272–25377 et al.

The DOE issued a Decision and Order denying five Applications for Refund filed in the subpart V Crude Oil refund proceeding. In each case, either the applicant or an affiliate of the applicant previously submitted a Stripper Well Surface Transporters claim, in which it released the rights of itself and its affiliated companies to other crude oil refunds by signing the Waiver and Release required for the Stripper Well claim. Therefore, the DOE determined that each applicant was not eligible for any refunds in this proceeding, and each refund application was denied. The DOE dismissed four Motions for Discovery filed by a group of States.

Lucas Trucking Corp., 02/01/90, RF272–32341

The DOE issued a Decision and Order considering an Application for Refund filed by Lucas Trucking Corp., a private carrier who was under contract to transport mail for the U.S. Postal Service. The DOE found that since the contract included a fuel escalator clause, it was likely that Lucas received reimbursements for increased fuel costs. Accordingly, Lucas' application was denied.

Nestle Foods Corp., 02/02/90, RF272–24490, RD272–24490

Nestle Food Corp., a producer and marketer of packaged foods, filed an Application for Refund as an end-user of refined petroleum products in the subpart V crude oil refund proceeding. A group of state governments objected to Nestle's claim, and filed a related motion for discovery. After considering the claim and the objections, OHA determined that the states had failed to produce any convincing evidence to show that Nestle had been able to pass on the crude oil overcharges to its customers, and granted the refund application. The refund approved was $119,421. The states' motion for discovery was denied.

Robert H. Allen, 01/30/90, RF262–28050

The DOE issued a Decision and Order granting a refund from crude oil overcharge funds to Robert H. Allen, the operator of a cattle ranch, feedlot and farm. The DOE rejected the portion of the applicant's claim that was for 364,158 gallons of liquid nitrogen fertilizer and anhydrous ammonia, finding that both of these products were manufactured from natural gas and therefore not within the scope of the crude oil refund proceeding. The amount of the refund granted for the remaining products was $249.

Seven Wheels, Inc., 02/01/90, RF272–7150

The DOE issued a Decision and Order granting, in part, a crude oil refund application filed by Seven Wheels, Inc. (Wheels), a truck leasing company. Wheels stated that approximately 50 percent of its total mileage during the consent order period was covered under a contract requiring the lessee to pay for the cost of fuel. The DOE found that Wheels would have been reimbursed for 50 percent of its increased fuel prices, and therefore would not have experienced injury in those instances. Accordingly, the DOE determined that Wheels was ineligible to receive a refund for 50 percent of its purchase volumes for motor gasoline and middle distillates. Wheels leased trucks to all other customers on a per mile basis without any separate charge for fuel. The DOE concluded that the firm should be treated as an end-user with respect to that portion of its purchases which it did not resell to truck lessees. The total refund amount approved in this Decision and Order is $511.

Shell Oil Company/Jeanetta Johnson and J.S. Landry, 01/31/90, RF315–9801

The DOE issued a Supplemental Order granting an additional refund of $1,805 to Jeanetta Johnson, and J.S. Landry, claimants in the Shell Oil Company refund proceeding.

Shell Oil Company/Regal Oil Company et al., 02/01/90, RF315–2456 et al.

The DOE issued a Decision and Order granting a refund to 14 claimants in the Shell Oil Company special refund proceeding. Each of the applicants is a reseller or retailer of Shell products electing the small claims injury presumption. The total refund granted was $85,960.

W.R. Grace Co., Polyfibron Division, 01/30/90, RF272–41261

The DOE issued a Decision and Order denying an Application for Refund filed by W.R./Grace Company, Polyfibron Division, (Grace) in the Subpart V crude oil proceeding. The DOE's denial was based on the fact that Grace's affiliate, Grace Distribution Services, was granted a refund from the Surface Transporters Escrow and had thereby waived Grace's right to a refund in the DOE crude oil proceeding.

Waste Control of New Mexico, 02/01/90, RF272–35679

The DOE granted a refund to Waste Control of New Mexico (WCNM) in the subpart V crude oil refund proceeding. WCNM purchased refined petroleum products during the crude oil price control period and was an end-user of those products. However, the WCNM's current parent company, Waste Control of North America, had waived its rights, and the rights of all its subsidiaries, by signing a waiver in the Surface Transporter proceeding. The OHA determined, however, that WCNM was eligible to receive a refund because it had filed its Subpart V claim before it was purchased by Waste Control of North America. The total refund granted in this Decision was $406.

Refund applications

The Office of Hearings and Appeals granted refunds to refund applicants in the following Decisions and Orders:

Name	Case No.	Date
Bendix Flight Systems Division.	RF272–9689	01/31/90
Exxon Corp./E.W. Wiggins Airways, Inc *et al.*	RF307–4672	01/29/90
Exxon Corp./Exxon of Olney *et al.*	RF307–9100	01/29/90
Exxon Corp./Sawyer Gas of Jacksonville *et al.*	RF307–4981	02/01/90
Exxon Corp./Squires Exxon *et al.*	RF307–18212	02/01/90
Gulf Oil Corp./ Blacksburg Gulf *et al.*	RF300–10012	02/01/90
Gulf Oil Corp./ Farmland Industries, Inc.	RF300–10289	01/29/90
Gulf Oil Corp./Katonah Gulf *et al.*	RF300–95549	02/01/90
Gulf Oil Corp./Long Island Lighting Co.	RF300–9313	02/02/90
Gulf Oil Corp./Ponzio Fuel Co. *et al.*	RF300–10409	02/01/90
Gulf Oil Corp./Ted Kaldis *et al.*	RF300–7458	02/02/90
Jackson Ready-Mix Concrete *et al.*	RF272–53503	01/30/90
M.A. Brown Trucking Co. *et al.*	RF272–17851	01/29/90
Power Test Petroleum Distributors, Inc./ Smithtown Power Test.	RF315–6	01/31/90
Shell Oil Co./A & S Shell Service *et al.*	RF315–8001	01/30/90
Shell Oil Co./Berry's Car Service *et al.*	RF315–6101	01/31/90
Shell Oil Co./Boswell Oil Co. *et al.*	RF315–2720	01/01/90

Dismissals

The following submissions were dismissed:

Name	Case No.
Amos Brothers Truck Stop	RF300–10930
Atlantic Richfield Co.	RF304–6461
Bowen's Grocery	RF300–10917
Carl's Spur	RF309–1382
Dipietro's Gulf Service	RF300–10920
Eureka Equity Exchange	RD272–45558
	RD272–47865
Fontaine Service Station	RF300–10923
Frank Kuchta	RF300–8265
Glenn T. Koteras	RF307–10054
Golden Flake Snack Foods, Inc.	RF300–9637
Homan & Siggins Fuel Oil Co.	RF307–10089
Ken's Lakeside Gulf	RF300–10932
Livingston Gulf	RF300–10933
Navy Public Works Center	RF307–2676
Publix Supermarkets	RF300–10890
Seacoast Products Inc.	RF307–10078
Skylake Gulf	RF300–9417
T.A. Ward	RF300–10163
Tamko Asphalt Products	RD272–2787
Walsh's Gulf	RF300–10934

Copies of the full text of these decisions and orders are available in the Public Reference Room of the Office of Hearings and Appeals, Room 1E–234, Forrestal Building, 1000 Independence Avenue SW., Washington, DC 20585, Monday through Friday, between the hours of 1 p.m. and 5 p.m., except federal holidays. They are also available in "Energy Management: Federal Energy Guidelines", a commercially published loose leaf reporter system.

Dated: April 25, 1990.

George B. Breznay,

Director, Office of Hearings and Appeals.

[FR Doc. 90–10204 Filed 5–1–90; 8:45 am]

BILLING CODE 6450–01–M

Office of Hearings and Appeals Proposed Refund Procedures

AGENCY: Office of Hearings and Appeals, DOE.

ACTION: Notice of Proposed Implementation of Special Refund Procedures.

SUMMARY: The Office of Hearings and Appeals (OHA) of the Department of Energy (DOE) announces the proposed procedures for the disbursement of $580,457.11, plus accrued interest, obtained by the DOE under the terms of a consent order entered into with Lantern Petroleum Corporation and John Mills. The OHA has tentatively

determined that the funds will be distributed in accordance with the DOE's Modified Statement of Restitutionary Policy Concerning Crude Oil Overcharges, 51 F.R. 27899 (August 4, 1986).

DATE AND ADDRESS: Comments must be filed in duplicate on or before June 1, 1990, and should be addressed to the Office of Hearings and Appeals, Department of Energy, 1000 Independence Avenue SW., Washington, DC. 20585. All comments should display a reference to case number LEF–0016.

FOR FURTHER INFORMATION CONTACT: Thomas L. Wieker, Deputy Director, Office of Hearings and Appeals, Department of Energy, 1000 Independence Avenue, SW, Washington, DC 20585, (202) 586–2390.

SUPPLEMENTARY INFORMATION: In accordance with § 205.282(b) of the procedural regulations of the Department of Energy (DOE). 10 CFR 205.282(b), notice is hereby given of the issuance of the Proposed Decision and Order set out below. The Proposed Decision and Order sets forth the procedures that the DOE has tentatively formulated to distribute § 580.457.11 that has been remitted by Lantern Petroleum Corporation and John Mills to the DOE. The DOE is currently holding the funds in an interest bearing account pending distribution.

The DOE has tentatively determined to distribute these funds in accordance with the DOE's Modified Statement of Restitutionary Policy Concerning Crude Oil Overcharges, 51 FR 27899 (August 4, 1986). Under the Modified Policy, crude oil overcharge monies are divided among the states, federal government, and injured purchasers of refined products. Under the plan we are proposing, refunds to the states would be in proportion to each state's consumption of petroleum products during the period of price controls. Refunds to eligible purchasers would be based on the number of gallons of petroleum products which they purchased and the extent to which they can demonstrate injury.

Applications for refunds should not be filed at this time. Appropriate public notice will be given when the submission of claims is authorized.

Any member of the public may submit written comments regarding the proposed refund procedures. Commenting parties are requested to submit two copies of their comments. Comments should be submitted within 30 days of the publication in the **Federal Register**, and should be sent to the address set forth at the beginning of this notice. All comments received will be available for public inspection between the hours of 1 p.m. through 5 p.m., Monday through Friday, except federal holidays, in the Public Reference Room of the Office of Hearings and Appeals, located in room 1E–234, 1000 Independence Avenue SW., Washington, DC 20585.

Dated: April 24, 1990.

George B. Breznay,

Director, Office of Hearings and Appeals.

April 24, 1990.

Implementation of Special Refund Procedures

Names of Firms: Lantern Petroleum Corporation, and John Mills
Date of Filing: April 3, 1990
Case Number: LEF–0016

Under the procedural regulations of the Department of Energy (DOE), the Economic Regulatory Administration (ERA) may request that the Office of Hearings and Appeals (OHA) formulate and implement special refund procedures. 10 CFR 205.281. These procedures are used to refund monies to those injured by actual or alleged violations of the DOE price regulations.

On April 3, 1990, the ERA filed a Petition for the Implementation of Special Refund Procedures for crude oil overcharge funds obtained from Lantern Petroleum Corporation and John Mills (hereinafter collectively referred to as Lantern). On December 19, 1989, the DOE and Lantern entered into a Settlement Agreement, which was approved by the United States District Court for the District of Columbia on March 5, 1990, to resolve the dispute between the two parties concerning Lantern's compliance with the DOE's crude oil layering regulation, 10 CFR 212.186, in 26 transactions during the period August 1978 through March 1979. Lantern remitted a total of $580,457.11 to the DOE in accordance with the Settlement Agreement. This Proposed Decision and Order sets forth the OHA's tentative plan to distribute these funds.

The general guidelines which the OHA may use to formulate and implement a plan to distribute refunds are set forth in 10 C.F.R. Part 205, Subpart V. The Subpart V process may be used in situations where the DOE cannot readily identify the persons who may have been injured as a result of actual or alleged violations of the regulations or ascertain the amount of the refund each person should receive. For a more detailed discussion of Subpart V and the authority of the OHA to fashion procedures to distribute refunds, see *Office of Enforcement*, 9 DOE ¶ 82,508 (1981), and *Office of Enforcement*, 8 DOE ¶ 82,597 (1981). We have considered the EPA's request to implement Subpart V procedure with respect to the monies received from Lantern, and have determined that such procedures are appropriate.

I. Background

On July 28, 1986, the DOE issued a Modified Statement of Restitutionary Policy Concerning Crude Oil Overcharges, 51 FR 27899 (August 4, 1986) (the MSRP). The MSRP, issued as a result of a court-approved Settlement Agreement in *In re: The Department of Energy Stripper Well Exemption Litigation*, M.D.L. No. 378 (D. Kan. 1986) (the Stripper Well Agreement), provides that crude oil overcharge funds will be divided among the states, the federal government, and injured purchasers of refined petroleum products. Under the MSRP, up to twenty percent of these crude oil overcharge funds will be reserved to satisfy valid claims by injured purchasers of petroleum products. Eighty percent of the funds, and any monies remaining after all valid claims are paid, are to be disbursed equally to the states and federal government for indirect restitution.

Shortly after the issuance of the MSRP, the OHA issued an Order that announced its intention to apply the Modified Policy in all Subpart V proceedings involving alleged crude oil violations. Order Implementing the MSRP, 51 FR 29689 (August 20, 1986). In that Order, the OHA solicited comments concerning the appropriate procedures to follow in processing refund applications in crude oil refund proceedings. On April 6, 1987, the OHA issued a Notice analyzing the numerous comments and setting forth generalized procedures to assist claimants that file refund applications for crude oil monies under the subpart V regulations. 52 FR 11737 (April 10, 1987) (the April Notice).

The OHA has applied these procedures in numerous cases since the April Notice, i.e., *New York Petroleum, Inc.*, 18 DOE ¶ 85,435 (1988) (*NYP*); *Shell Oil Co.*, 17 DOE ¶ 85,204 (1988) (*Shell*); *Ernest A. Allerkamp*, 17 DOE ¶ 85,079 (1988) (*Allerkamp*), and the procedures have been approved by the United States District Court for the District of Kansas as well as the Temporary Emergency Court of Appeals (TECA). In the case *In re: The Department of Energy Stripper Well Exemption Litigation*, various states filed a Motion with the Kansas District Court, claiming that the OHA violated the Stripper Well Agreement by employing presumptions of injury for end-users and by improperly calculating the refund

amount to be used in those proceedings. *In re: The Department of Energy Stripper Well Exemption Litigation*, 671 F. Supp. 1318 (D. Kan. 1987), *aff'd*, 857 F.2d 1481 (Temp. Emer. Ct. App. 1988). On August 17, 1987, Judge Theis issued an Opinion and Order denying the states' Motion in its entirety. The court concluded that the Stripper Well Agreement "does not bar [the] OHA from permitting claimants to employ reasonble presumptions in affirmatively demonstrating injury entitling them to a refund." *Id.* at 1323. The court also ruled that, as specified in the April Notice, the OHA could calculate refunds based on a portion of the M.D.L. 378 overcharges. *Id.* at 1323–24.

II. The Proposed Refund Procedures

A. Refund Claims

We now propose to apply the procedures discussed in the April Notice to the crude oil subpart V proceeding that is the subject of the present determination. As noted above, an alleged crude oil violation amount of $580,457.11, plus interest, is covered by this proposed Decision. We have decided to reserve the full twenty percent of the alleged crude oil violation amount, or $116,091.42, plus interest, for direct refunds to claimants, in order to insure that sufficient funds will be available for refunds to injured parties.

The process which the OHA will use to evaluate claims based on alleged crude oil violations will be modeled after the process the OHA has used in Subpart V proceedings to evaluate claims based upon alleged overcharges involving refined products. *E.g., Mountain Fuel Supply Co.*, 14 DOE ¶ 85,475 (1986) (*Mountain Fuel*). As in non-crude oil cases, applicants will be required to document their purchase volumes and prove that they were injured as a result of the alleged violations. Applicants who were end-users or ultimate consumers of petroleum products, whose businesses are unrelated to the petroleum industry, and who were not subject to the DOE price regulations are presumed to have been injured by any alleged crude oil overcharges. In order to receive a refund, end-users need not submit any further evidence of injury beyond the volume of petroleum products purchased during the period of price controls. *E.g., A. Tarricone, Inc.*, 15 DOE ¶ 85,495 at 88,893–96 (1987). However, the end-user presumption of injury can be rebutted by evidence which establishes that the specific end-user in question was not injured by the crude oil overcharges. *Berry Holding Co.*, 16 DOE ¶ 85,405 at 88,797 (1987); *NYP*, 18 DOE at 88,701–03.

Reseller and retailer claimants must submit detailed evidence of injury, and may not rely on the presumptions of injury utilized in refund cases involving refined petroleum products. They can, however, use econometric evdience of the type employed in the OHA Report to the District Court in the Stripper Well Litigation, 6 Fed. Energy Guidelines ¶ 90,507. Applicants who executed and submitted a valid waiver pursuant to one of the escrows established in the Stripper Well Agreement have waived their rights to apply for crude oil refunds under subpart V. *Mid-America Dairyman, Inc.* v. *Herrington*, 878 F. 2d 1448 (Temp. Emerg. Ct. App. 1989); *accord, Bosie Cascade Corp.*, 18 DOE ¶ 85,970 (1989).

Refunds to eligible claimants who purchased refined petroleum products will be calculated on the basis of a volumetric refund amount derived by dividing the alleged crude oil violation amounts involved in this determination ($580,457.11) by the total consumption of petroleum products in the United States during the period of price controls (2,020,997,335,000 gallons). *Mountain Fuel*, 14 DOE at 88,868 n.4. This yields a volumetric refund amount of $0.000000287 per gallon.

As we stated in previous Decisions, a crude oil refund applicant will be required to submit only one application for crude oil overcharge funds. *E.g., Allerkamp*, 17 DOE at 88,176. Any party that has previously submitted a refund application in the crude oil refund proceedings need not file another application. That previously filed application will be deemed to be filed in all crude oil proceedings as the procedures are finalized. A deadline of June 30, 1988 was established for the first pool of crude oil funds. The first pool was funded by crude oil refund proceedings, impelmented pursuant to the MSRP, up to and including *Shell*. A deadline of October 31, 1989 was established for applications for refunds from the second pool of crude oil funds. The second pool was funded by those crude oil proceedings beginning with *World Oil Co.*, 17 DOE ¶ 85,568, *corrected*, 17 DOE ¶ 85,669 (1988), and ending with *Texaco Inc.*, 19 DOE ¶ 85,200, *corrected*, 19 DOE ¶ 85,236 (1989). The deadline for filing an application for refund from the third pool of funds was established as March 31, 1991 by *Bi-Petro, Inc.*, 20 DOE ¶ 85,071 (1990). The volumetric refund amount for the third pool of funds will be increased as additional crude oil violation amounts available in the future will be published in the Federal Register.

B. Payments to the States and Federal Government

Under the terms of the MSRP, we propose that eighty percent of the alleged crude oil violation amounts subject to this Proposed Decision, or $464,365.69, plus interest, should be disbursed in equal shares to the states and federal government for indirect restitution. Refunds to the states will be in proportion to the consumption of petroleum products in each state during the period of price controls. The share or ratio of the funds which each state will receive is contained in Exhibit H of the Stripper Well Agreement. When distrused, these funds will be subject to the same limitations and reporting requirements as all other crude oil monies received by the states under the Stripper Well Agreement.

It is Therefore Ordered That:

The refund amount remitted to the Department of Energy by Lantern Petroleum Corporation and John Mills pursuant to the Settlement Agreement entered on December 19, 1989, and approved by the United States District Court for the District of Columbia on March 5, 1990, will be distributed in accordance with the foregoing Decision.

[FR Doc. 90–10205 Filed 5–1–90; 8:45 am]

BILLING CODE 6450–01–M

Proposed Implementation of Special Refund Procedures

AGENCY: Office of Hearings and Appeals, DOE.

ACTION: Notice of Proposed Implementation of Special Refund Procedures.

SUMMARY: The Office of Hearings and Appeals (OHA) of the Department of Energy (DOE) announces the proposed procedures for disbursement of $1,960,935.22, plus accrued interest, in alleged crude oil and refined petroleum product violation amounts obtained by the DOE under the terms of a consent order entered into with Fletcher Oil & Refining Company (Fletcher), Case No. LEF–0010. The OHA has tentatively determined that one-half of the funds ($980,467.61) will be distributed in accordance with the DOE's Modified Statement of Restitutionary Policy Concerning Crude Oil Overcharges, and the other one-half of the funds (980,467.61) to customers which purchased refined petroleum products from Fletcher during the period August 19, 1973 through January 27, 1981.

DATE AND ADDRESS: Comments must be filed in duplicate on or before June 1,

1990, and they should be addressed to the Office of Hearings and Appeals, Department of Energy, 1000 Independence Avenue, SW., Washington, DC 20585. All comments should display a prominent reference to case number LEF–0010.

FOR FURTHER INFORMATION CONTACT: Thomas O. Mann, Deputy Director, Roger Klurfeld, Assistant Director, Office of Hearings and Appeals, 1000 Independence Avenue, SW., Washington, DC 20585, (202) 586–2094 (Mann); 586–2383 (Klurfeld).

SUPPLEMENTARY INFORMATION: In accordance with 10 CFR 205.282(b), notice is hereby given of the issuance of the Proposed Decision and Order set out below. The Proposed Decision and Order sets forth the procedures that the DOE has tentatively formulated to distribute to eligible claimants $1,960,935.22, plus accrued interest, obtained by the DOE under the terms of a consent order enterd into with Fletcher Oil & Refining Company (Fletcher) on January 10, 1983. The funds were paid by Fletcher towards the settlement of alleged violations of the DOE's Mandatory Petroleum Price and Allocation Regulations during the period August 19, 1973 through January 27, 1981 (the consent order period).

The OHA has proposed to divide the Fletcher consent order fund into two equal refund pools based on alleged crude oil overcharges and alleged refined petroleum product overcharges.

For the crude oil refund pool ($980,467.61), the OHA has tentatively determined to distribute these funds in accordance with the DOE's Modified Statement of Restitutionary Policy Concerning Crude Oil Overcharges, 51 FR 27899 (August 4, 1986) (the MSRP). Under the MSRP, crude oil overcharge monies are divided between the federal government, the states, and injured purchasers of refined petroleum products. Refunds to the states would be distributed in proportion to each state's consumption of petroleum products during the price control period. Refunds to eligible purchasers would be based on the number of gallons of petroleum products which they purchased and the degree to which they can demonstrate injury.

With respect to the refined product refund pool ($980,467.61), the OHA has tentatively determined to distribute these funds in two stages. In the first stage, we will accept claims from identifiable purchasers of petroleum products from Fletcher who may have been injured by the alleged overcharges. The specific requirements which an applicant must meet in order to receive a refund are set out in Section V of the Proposed Decision. Claimants who meet these specific requirements will be eligible to receive refunds based on the number of gallons of refined petroleum products which they purchased from Fletcher.

If any funds remain in the refined product refund pool after valid claims are paid in the first stage, they may be used for indirect restitution in accordance with the provisions of the Petroleum Overcharge Distribution and Restitution Act of 1986 (PODRA), 15 U.S.C. 4501–07.

Applications for Refund should not be filed at this time. Appropriate public notice will be provided prior to the acceptance of claims. Any member of the public may submit written comments regarding the proposed refund procedures. Commenting parties are requested to provide two copies of their submissions. Comments must be submitted within 30 days of publication of this notice in the **Federal Register** and should be sent to the address set forth at the beginning of this notice. All comments received in this proceeding will be available for public inspection between the hours of 1 p.m. and 5 p.m., Monday through Friday, except federal holidays, in the Public Reference Room of the Office of Hearings and Appeals, located in Room 1E–234, 1000 Independence Avenue SW., Washington, DC 20585.

Dated: April 25, 1990.

George B. Breznay,

Director, Office of Hearings and Appeals.

April 25, 1990.

Implementation of Special Refund Procedures

Name of Firm: Fletcher Oil & Refining Company
Date of Filing: February 8, 1990
Case Number: LEF–0010

On February 8, 1990, the Economic Regulatory Administration (ERA) of the Department of Energy (DOE) filed a Petition for the Implementation of Special Refund Procedures with the Office of Hearings and Appeals (OHA), to distribute the funds which Fletcher Oil & Refining Company (Fletcher) remitted to the DOE pursuant to a 1983 consent order between the DOE and Fletcher. Fletcher has remitted $1,367,918.52 pursuant to the consent order, to which $593,016.70 in interest has accrued as of March 31, 1990. In accordance with the procedural regulations codified at 10 CFR part 205, subpart V (hereinafter subpart V), the ERA requests that the OHA establish special refund procedures to remedy the effects of the alleged regulatory violations resolved by the Fletcher consent order.

I. Background

Fletcher operated a crude oil refinery, and it sold a range of refined petroleum products covered by the Mandatory Petroleum Price and Allocation Regulations (the DOE regulations), which were issued under the Emergency Petroleum Allocation Act of 1973 (EPAA), 15 U.S.C. 751 *et. seq.* Fletcher was a "refiner" subject to the price regulations set forth at 10 CFR part 212, subpart E, between 1973 and January 27, 1981. During a portion of this period, Fletcher was also subject to the Domestic Crude Oil Allocation Program (the Entitlements Program), codified at 10 CFR 211.67.

During the period of petroleum price controls, the ERA conducted several audits of Fletcher's operations to determine its compliance with the DOE regulations. As a result of these audits, the ERA issued Notices of Probable Violation (NOPVs) alleging that Fletcher had not complied with the refiner price regulations in its refined product sales and the Entitlements Program in its crude oil refinery operations.

On January 10, 1983, Fletcher entered into a consent order with the DOE resolving issues of its alleged violation of the DOE regulations between August 19, 1973 and January 27, 1981 (the consent order period). Without admitting any violations of these regulations, Fletcher remitted $1,367,918.52 to the DOE, to which $593,016.70 in interest has accrued as of March 31, 1990. Therefore, a total of $1,960,935.22 is available for disbursement pursuant to the consent order between the DOE and Fletcher. These funds are held in an interest-bearing escrow account at the Department of the Treasury awaiting a determination of their proper disposition.

II. Jurisdiction and Authority

The regulations codified in subpart V establish general guidelines which the OHA may utilize in formulating and implementing a distribution plan for funds received as a result of an enforcement action. A more detailed treatment of subpart V and the authority of the OHA to design refund procedures may be found in *Office of Enforcement*, 9 DOE ¶ 82,508 (1981) and in *Office of Enforcement*, 8 DOE ¶ 82,597 (1981) (*Vickers*).

We have considered the ERA's petition for the implementation of refund procedures under the subpart V mechanism with respect to the Fletcher

consent order fund and have determined that such refund procedures are appropriate. This Proposed Decision and Order establishes the OHA's tentative plans to distribute this fund.

III. Division of the Fletcher Consent Order Fund

The 1983 consent order between the DOE and Fletcher settled issues of Fletcher's alleged violation of regulations governing the Entitlements Program and the sale of refined petroleum products. These issues were based upon a 1980 NOPV alleging circumvention of the Entitlements Program in a crude oil processing agreement, and a Proposed Remedial Order drafted in 1982, following another 1980 NOPV, alleging that Fletcher did not properly calculate its refined product selling prices under the refiner price rule. Since our review of the enforcement record indicates that the alleged violations were attributable, in approximately equal amounts, to Fletcher's *crude oil* and *refined product* operations, we believe that it is most equitable to direct one-half of the Fletcher consent order fund ($980,467.61) into a crude oil refund pool and one-half ($980,467.61) into a refined product refund pool.

IV. Proposed Crude Oil Refund Procedures

A. Crude Oil Refund Policy

The portion of the Fletcher consent order monies in the crude oil pool will be distributed in accordance with the DOE's Modified Statement of Restitutionary Policy in Crude Oil Cases, 51 FR 27899 (August 4, 1986) (the MSRP). The MSRP was issued as a result of a court-approved Settlement Agreement *In Re: The Department of Energy Stripper Well Exemption Litigation*, 653 F. Supp. 108 (D. Kan.), 6 Fed. Energy Guidelines ¶ 90,509 (1986) (the Stripper Well Statement Agreement). The MSRP establishes that 40 percent of the cruide oil overcharged funds will be refunded to the federal government, another 40 percent to the states, and up to 20 percent may be initially reserved for the payment of claims by injured parties. The MSRP also specifies that any monies remaining after all valid claims by injured purchasers are paid be disbursed to the federal government and the states in equal amounts.

The OHA has utilized the MSRP in all subpart V proceedings involving alleged crude oil violations. *See* Order Implementing the MSRP, 51 FR 29689 (August 20, 1986). This Order provided a period of thirty days for the filing of comments or objections to our proposed use of the MSRP as the groundwork for evaluating claims in crude oil refund proceedings. Following this period, the OHA issued a Notice evaluating the numerous comments which it received pursuant to the Order Implementing the MSRP. This Notice was published at 52 FR 11737 (April 10, 1987) (the April 10 Notice).

The April 10 Notice contained guidance materials to assist potential claimants wishing to file refund applications for crude oil monies under the subpart V regulations. Generally, all claimants would be required to (1) document their purchase volumes of petroleum products during the August 19, 1973 to January 27, 1981 crude oil price control period, and (2) prove that they were injured by the alleged crude oil overcharges. We also specified that end-users of petroleum products whose businesses are unrelated to the petroleum industry will be presumed to have been injured by the alleged crude oil overcharges and need not submit any additional proof of injury beyond documentation of their purchase volumes. *See City of Columbus, Georgia*, 16 DOE ¶ 85,550 (1987). Additionally, we stated that crude oil refunds would be calculated on the basis of a per gallon (or volumetric) refund amount, which is obtained by dividing the crude oil refund pool by the total consumption of petroleum products in the United States during the crude oil price control period.[1] The OHA has adopted the refund procedures outlined in the April 10 Notice in numerous cases. *See e.g. Shell Oil Company*, 17 DOE ¶ 85,204 (1988) (*Shell*); *Mountain Fuel Supply Company*, 14 DOE ¶ 85,475 (1986) (*Mountain Fuel*).

B. Refund Claims

We propose to adopt the DOE's standard procedures to distribute the crude oil portion of the Fletcher consent order fund. As mentioned above, $880,467.61 and any interest accuring on this amount prior to its disbursement, is the amount covered by the crude oil portion of this Proposed Decision. We have chosen to initially reserve twenty percent of these funds ($196,093.52) and accrued interest, for direct refunds to claimants in order to ensure that sufficient funds will be available for injured parties. This reserve figure may later be reduced if circumstances warrant.

The OHA will evaluate crude oil refund claims in a manner similar to that used in subpart V proceedings to evaluate claims based on alleged refined product overcharges. *See Mountain Fuel* at 88,869. Under these procedures, claimants will be required to document their purchase volumes of petroleum products and prove that they were injured as a result of the alleged violations.

We will adopt a presumption that the crude oil overcharges were absorbed, rather than passed on, by applicants which were (1) end-users of petroleum products, (2) unrelated to the petroleum industry, and (3) not subject to the regulations promulgated under the EPAA. In order to receive a refund, end-user claimants need not submit any evidence of injury beyond documentation of their purchase volumes. *Shell* at 88,406.

Retailer, reseller, and refiner applicants must submit detailed evidence of injury, and they may not rely upon the injury presumptions utilized in some refined product refund cases. *Shell* at 88,406. These applicants may, however, use econometric evidence of the type found in the OHA Report on Stripper Well Overcharges, 6 Fed. Energy Guidelines ¶ 90,507 (1985). *See also* Petroleum Overcharge Distribution and Restitution Act § 3003(b)(2), 15 U.S.C. 4502(b)(2). If a claimant has executed and submitted a valid waiver pursuant to one of the escrows established by the Stripper Well Settlement Agreement, it has waived its rights to file an application for subpart V crude oil refund monies. *See Mid-America Dairymen* v. *Herrington*, 878 F.2d 1448 (Temp. Emer. Ct. App.) 3 Fed. Energy Guidelines ¶ 26,617 (1989); *In Re: Department of Energy Stripper Well Exemption Litigation*, 707 E. Supp. 1267 (D. Kan.), 3 Fed. Energy Guidelines ¶ 26,613 (1987).

Refunds to eligible claimants that purchased refined petroleum products will be calculated on the basis of a volumetric amount obtained by dividing the crude oil refund monies involved in this determination ($980,467.61) by the total U.S. consumption of petroleum products during the price control period (2,020,997,335,000 gallons). *Mountain Fuel* at 88,868 n. 4. The calculation results in a volumetric refund amount of $0.00000048514 per gallon. This method reflects the fact that crude oil overcharges were spread evenly throughout the domestic petroleum

[1] The crude oil refund pool used in the calculation of the volumetric refund amount includes crude oil overcharge funds in the DOE escrow account at the time of the Stripper Well Settlement Agreement and a portion of the funds in the Stripper Well (M.D.L. 378) escrow at the time.

refining industry by the Entitlements Program. [2].

As has been stated in prior Decisions, a crude oil refund applicant will only be required to submit one application for its share of all available crude oil overcharge funds. *See, e.g., A. Tarricone,* 15 DOE ¶ 85,495 (1987). A party that has already submitted a claim in any other crude oil refund proceeding implemented by the DOE need not file another claim. The prior application will be deemed to be filed in all crude oil refund proceedings finalized to date.

The deadline for claims to the first pool of crude oil overcharge funds was June 30, 1988, and this pool contained funds covered by determinations up to and including *Shell.* A second pool of crude oil overcharge funds, obtained pursuant to the determinations beginning with *World Oil Company,* 17 DOE ¶ 85,568, *corrected,* 17 DOE ¶ 85,669 (1988) and ending with *Texaco Inc.,* 19 DOE ¶ 85,200, *corrected,* 19 DOE ¶85,236 (1989), was established with an application deadline of October 31, 1989. The application deadline for the third crude oil overcharge pool, covering the present determination is March 31, 1991. *See Bi-Petro, Inc.,* 20 DOE ¶ 85,071 (1990); *Cibro Sales Corporation, Inc.,* 20 DOE ¶ 85,036 (1990). The volumetric refund amount from the third pool of crude oil funds will rise as additional crude oil overcharge monies become available. Applicants may be required to submit additional information to support their refund claims for future amounts. Notice of any such additional amounts will be published in the **Federal Register.**

C. Payments to the Federal Government and the States

Under the MSRP, we propose that eighty percent of the alleged crude oil overcharge amounts covered by this Proposed Decision ($784,374.09) and accrued interest be disbursed, in equal shares, to the federal government and the states for indirect restitution. The refunds disbursed to the states will be in proportion to the each state's consumption of petroleum products during the price control period. The specific ratio or share of the funds which each state will receive is contained in Exhibit H of the Stripper Well Settlement Agreement, 6 Fed. Energy Guidelines ¶ 90,509 at 90,687. These funds will be controlled by the same guidelines and reporting requirements as all other crude oil monies received by the states under the Settlement Agreement.

V. Proposed Refined Product Refund Procedures

We propose to implement a two-stage refund procedure for the refined product portion of the Fletcher consent order fund ($980,467.61). Purchasers of refined petroleum products from Fletcher during the consent order period may file Applications for Refund in the initial stage, and any monies remaining after the payment of all valid first-stage claims will be dispersed to the state governments for indirect restitution. Our experience with Subpart V refund proceedings indicates that potential claimants will consist of (1) end-users, (2) regulated entities, such as public utilities, and cooperatives, and (3) retailers, resellers, and refiners of petroleum products (hereinafter collectively referred to as "resellers"). The submission of a refund application for a share of the Fletcher crude oil pool will not be considered as a request for a refund from the Fletcher refined product pool; hence, a separate refined product application must be submitted.

A. Claims Based on Alleged Overcharges

In order to receive a refund, each claimant will be required to submit a schedule of its monthly refined petroleum product purchases from Fletcher during the August 19, 1973 to January 27, 1981 consent order period. If the petroleum products were not purchased directly from Fletcher, the claimant must establish that they originated with Fletcher. Unless a reseller claimant elects to utilize the injury presumptions described below, it will be required to submit a detailed showing that it was injured by Fletcher's alleged overcharges. The two distinct elements generally required in such an injury showing are (1) the existence of "banks" of unrecovered increased product costs by a reseller claimant in excess of the refund sought, and (2) evidence that market conditions prevented the reseller claimant from raising its prices to pass through the costs of the alleged overcharges.[3] *See Vickers Energy Corporation/Hutchens Oil Co. Inc.,* 11 DOE ¶ 85,070 at 88,105 (1983). The second element of the injury showing could be a demonstration that the company suffered a competitive disadvantage as a result of its purchases from Fletcher. *See National Helium Corporation/Atlantic Richfield Company,* 11 DOE ¶ 85,257 (1984) *affirmed sub nom. Atlantic Richfield Company* v. *DOE,* 618 F. Supp. 1199 (D. Del. 1985).

1. *Use of Presumptions.* The use of certain presumptions permits claimants to paricipate in refund proceedings without incurring burdensome expenses, and aids in the efficient evaluation of refund claims. *See, e.g., Texaco Inc.,* 20 DOE ¶ 85,147 (1990) The use of presumptions in the refund cases is specifically authorized by the pertinent Subpart V regulations at 10 CFR 205.282(e). Accordingly, we propose to adopt the presumptions described below.

a. *Calculation of Refunds.* We will adopt a presumption that the alleged overcharges were dispersed equally in all of Fletcher's sales of regulated (covered) refined petroleum products during the consent order period and, thereby, refunds wil be made on a per gallon, or volumetric, basis. [4] In the absence of other information, a volumetric refund is appropriate because the petroleum price regulations generally required a regulated company to account for increased costs on a company-wide basis in establishing its prices.

Under this volumetric method, a claimant's "allocable share" of the refined product portion of the consent order fund is equal to the number of gallons of covered petroleum products which it purchased from Fletcher during the consent order (refund) period multiplied by the per gallon (volumetric) refund amount.[5] In the present refund

[2] The Entitlements Program equalized the effects, among all domestic refiners and their downstream customers, of overcharges occurring due to crude oil miscertifications by requiring the exchange of "entitlements" payments between refiners.

[3] Claimants which have previously relied upon their banked costs to obtain refunds in other refund proceedings should deduct those refunds from any cost banks submitted in this refund proceeding. *See Husky Oil Co./Metro Oil Products, Inc.,* 16 DOE ¶ 85,090 at 88,179 (1987). Additionally, a claimant attempting to show injury may not receive a refund for any month in which it has a negative accumulated cost bank (for the petroleum product) or for any prior month. *See Standard Oil Co. (Indiana)/Suburban Propane Gas Corporation,* 13 DOE ¶ 85,030 at 88,082 (1985). If a claimant no longer has records of its banked costs, the OHA may use its discretion to permit the claimant to approximate those cost banks. *See Gulf Oil Corporation/Sturdy Oil Co.,* 15 DOE ¶ 85,187 (1986).

[4] If an individual claimant believes that it was injured by more than its volumetric share, it may elect to forego this presumption and file a refund application based upon a claim that it suffered a disproporationate share of Fletcher's alleged overcharges. *See, e.g., Mobil Oil Corporation/Marine Corps Exchange Service,* 17 DOE ¶ 85,714 (1988). Such a claim will only be granted if the claimant makes a persuasive showing that it was "overcharged" by a specific amount, and it absorbed those overcharges. *See Panhandle Eastern Pipeline Company/Western Petroleum Company,* 19 DOE ¶ 85,705 (1989). To the degree that a claimant makes this showing, it will receive an above-volumetric refund.

[5] The petroleum products sold by Fletcher which were subject to the petroleum price regulations and their respective decontrol dates are as follows:

proceeding, we have computed the per gallon refund amount to be $0.00086.[6] Using this volumetric amount, a claimant would be eligible for a refund of $860 per one million gallons purchased. In addition to this principal refund, a claimant whose application is granted in this refund proceeding will receive a pro rata share of the interest that has accrued on the Fletcher refined product pool since its deposit in the appropriate escrow account.[7]

We also propose to adopt various presumptions concerning a claimant's injury, which are listed below.

b. *End-Users.* In accordance with prior Subpart V refund proceedings, we propose to adopt the presumption that end-users of Fletcher petroleum products, whose businesses are unrelated to the petroleum industry, were injured by Fletcher's alleged overcharges. *See e.g., Texas Oil and Gas Corporation,* 12 DOE ¶ 85,069 at 88,209 (1984) (TOGCO). Unlike the regulated companies in the petroleum industry, end-users generally were not subject to the petroleum price regulations, during the refund period, and they were not required to keep records justifying selling price increases by reference to petroleum cost increases. Therefore, evaluation of the impact of the alleged overcharges on the prices of the end-users' goods and services would be beyond the scope of this refund proceeding. *See TOGCO* at 88,209. Accordingly, we propose that end-users will only be required to establish their purchase volumes of covered Fletcher petroleum products during the refund period to make a sufficient showing that they were injured by the alleged overcharges.

c. *Regulated Bodies and Cooperatives.* We propose that a claimant whose prices for goods and services are regulated by a governmental body (e.g., public utilities), or an agricultural cooperative, need only submit documentation of its purchases, or those of its members in the case of a cooperative, in order to receive a full volumetric refund. However, a regulated company or a cooperative will be required to certify that it will (1) pass any refund received through to its customers or member-customers, (2) explain the manner in which it plans to provide this restitution to its customers or members, and (3) notify the appropriate regulatory or membership body of the receipt of a refund. *See Exxon* at 89,150. These requirements are based upon the presumption that a regulated firm or cooperative would have routinely passed any overcharges through to its purchasers and, therefore, should pass any refunds resulting from the alleged overcharges to its customers and member-customers, respectively. Accordingly, these firms will not be required to make a detailed demonstration of injury to receive a refund.[8]

d. *Retailers, Resellers, and Refiners—*

i. *Small Claims Presumption.* We propose the adoption of a "small claims" presumption that a retailer, reseller, or refiner claimant which resold Fletcher petroleum products and possesses an allocable share of the refined product pool of $5,000 or less, exclusive of interest, was injured by the alleged overcharges. Under the small claims injury presumption, such a claimant will not be required to submit evidence of injury beyond documentation of its purchase volume of covered Fletcher petroleum products. *See TOGCO* at 88,210. This presumption is based on the fact that the considerable expense which may be involved in a detailed injury showing may exceed the potential refund for many of the smaller claimants. Therefore, the absence of simplified refund procedures for small claims could deprive injured parties of their possibility of obtaining refunds. Furthermore, the use of the small claims injury presumption is desirable because it expedites the OHA's evaluation of the large number of routine refund claims expected.[9]

ii. *Mid-Level Claims Presumption.* Additionally, a retailer, reseller, or refiner claimant whose allocable share of the Fletcher refined product pool exceeds $5,000 exclusive of interest, may elect to receive either $5,000 or 40 percent of its allocable share, whichever is greater, up to $50,000, also exclusive of interest.[10] The use of this presumption reflects our belief that the mid-level claimants were likely to have experienced some injury as a result of Fletcher's alleged overcharges. *See Total Petroleum, Inc.,* 17 DOE ¶ 85,542 at 89,050 (1988). In some prior refund proceedings, we have determined product-specific levels of injury through detailed evaluations. *See, e.g., Getty Oil Company,* 15 DOE ¶ 85,064, (1986). However, in Gulf Oil Corporation, 16 DOE ¶ 85,381 at 88,737 (1987) (*Gulf*), we determined that it was better to adopt a single presumptive level of injury for all mid-level claimants of 40 percent for all covered petroleum products which they purchased.

We believe that the method used in the *Gulf* determination is sound and, accordingly, we propose to adopt, in the present refund proceeding, a 40 percent presumptive level of injury for all mid-level claimants in all of their covered purchases. A claimant seeking a refund under the mid-level injury presumption will only be required to establish its purchase volume of covered Fletcher petroleum products to be eligible for a refund of $5,000 or 40 percent of its allocable share, whichever is greater, up to $50,000.[11]

iii. *Spot Purchasers.* We propose to adopt a rebuttable presumption that a retailer, reseller, or refiner claimant which only made spot purchases from Fletcher did not sustain injury as a result of those purchases. As we have stated in prior Decisions, spot

---

Residual Fuel and Low Sulphur Fuel Oil.....June 1, 1976
Diesel Fuel and No. 2 Fuel Oil.....July 1, 1976
Jet Fuel.....February 26, 1970
Butane.....January 1, 1980
Motor Gasoline and Propane...January 28, 1981

[6] We obtained the per gallon refund figure by dividing the refined product portion of the Fletcher consent order fund ($980,467.61) by the approximate volume of refined petroleum products sold by Fletcher between the beginning of the refund period (August 19, 1973) and the dates of decontrol for the relevant products (1,139,827,413 gallons).

[7] As in prior cases, we propose to establish a minimum principal refund amount of $15. In this determination, any potential claimant purchasing less than 17,442 gallons of petroleum products from Fletcher would have an allocable share of less than $15. We have found that the cost of processing claims in which refunds of less than $15 are sought outweighs the restitutionary benefits in those instances. *See Exxon Corporation,* 17 DOE ¶ 85,590 at 89,150 (1988) (*Exxon*).

[8] A cooperative's purchasers of Fletcher petroleum products which were subsequently resold to non-members will be treated in a manner consistent with purchases made by other resellers. *See Total Petroleum, Inc./Farmers Petroleum Cooperative, Inc.,* 19 DOE ¶ 85,215 (1989).

[9] In order to be considered under the small claims injury presumption, a retailer, reseller, or refiner applicant must have purchased less than 5,813,954 gallons of Fletcher petroleum products during the refund period.

[10] Under the mid-level injury presumption, a claimant which purchased between 5,813,954 gallons and 14,534,884 gallons of Fletcher petroleum products would be eligible to receive a principal (exclusive of interest) refund of $5,000. A claimant purchasing between 14,534,885 gallons and 145,348,837 gallons of petroleum products would be eligible for a principal refund equal to 40 percent of its allocable share, and an applicant with a purchase volume in excess of 145,348,837 gallons would be eligible for a principal refund of $50,000.

[11] If a claimant attempts to make a detailed injury showing for the purpose of obtaining 100 percent of its allocable share but, instead, submits evidence leading us to conclude that it passed through all of the alleged overcharges, or would be eligible for a refund of less than the appropriate presumptive injury level, it may not then be eligible for a refund under an injury presumption. Such a claimant would be granted a refund reflecting the level of injury exhibited in its injury showing. No refund will be granted if its submission shows that it was not injured in its purchases from Fletcher. *See Exxon* at 89,150 n. 10.

purchasers generally had considerable discretion in the timing and location of their purchases and, therefore, would not have made the purchases at increased prices unless they were able to pass through the full amount of their supplier's selling price to their downstream customers. *See, e.g., Vickers* at 85,396–7. Accordingly, a spot purchaser applicant must submit specific and detailed evidence to rebut the spot purchaser presumption of non-injury and to establish the degree to which it was injured in its spot purchases from Fletcher.[12]

B. Allocation Claims

We may also receive claims based upon Fletcher's alleged failure to supply petroleum products that it was obligated to supply under the DOE allocation regulations. 10 CFR part 211. Any such applications will be evaluated with reference to the standards established in Subpart V implementation cases such as *Office of Special Counsel,* 10 DOE ¶ 85,048 at 88,220 (1982), and in specific refund cases such as *Mobil Oil Corporation/Aromalene Oil Company,* 20 DOE ¶ 85,155 (1990); *Mobil Oil Corporation/Reynolds Industries, Inc.,* 17 DOE ¶ 85,608 (1988). These standards generally require an allocation claimant to demonstrate (1) the existence of a supplier/purchaser relationship with the consent order firm, (2) the likelihood that the consent order firm violated the DOE allocation regulations by not supplying the claimant with petroleum products as reqired by 10 CFR part 205, (3) a contemporaneous complaint to the DOE, or other evidence that the claimant contemporaneously sought redress, with respect to the alleged allocation violation, and (4) the occurrence and degree of injury that it sustained as a result of this alleged violation.

In evaluating whether allocation claims meet these standards, we will consider various factors. For example, we will seek to obtain as much information as possible concerning the DOE's treatment of any contemporaneous complaints made by the claimant. We will also look at any defenses to the alleged allocation violation by Fletcher. *See Marathon Petroleum Company/Research Fuels, Inc.,* 19 DOE ¶ 85,575 (1989), *action for review pending,* No. CA3–89–2983G (N.D. Tex. filed November 22, 1989). In evaluating a claimant's injury from an alleged allocation violation, we will consider the effect of the alleged violation on its entire business operation, with particular attention to the volume of petroleum products which it received from suppliers other than Fletcher. In determining the amount of any allocation refund, we will utilize any available information regarding the portion of the Fletecher consent order fund that the DOE, and its predecessors, generally attributed to alleged allocation violations and to the specific allocation violation alleged by the claimant. Finally, since the Fletcher consent order is the result of a negotiated settlement of the issues identified in the enforcement proceedings against Fletcher and the amount of the consent order is less than Fletcher's potential liability in those proceedings, we will prorate allocation refunds which would otherwise be disproportionately large in relation to the consent order fund.

C. Distribution of Funds Remaining After the First Stage

We propose that any funds remaining in the refined product pool of the Fletcher consent order fund after the payment of all valid first-stage claims be distributed in accordance with the provisions of the Petroleum Overcharge Distribution and Restitution Act of 1986 (PODRA), 15 U.S.C. 4501–7. PODRA requires that the Secretary of Energy annually determine the amount of oil overcharge funds that will not be needed to meet the claims of injured parties in subpart V refund proceedings and make those funds available to state governments for use in four identified energy conservation programs. The Secretary has delegated these duties to the OHA, and any funds in the Fletcher refined product pool that the OHA detemines will not be required for direct restitution to injured customers will be distributed in accordance with the procedures established in PODRA.

It is Therefore Ordered That: The refund amounts remitted to the Department of Energy by Fletcher Oil & Refining Company, pursuant to Consent Order Nos. N00S90145, N00S98074, and 960S00100, shall be distributed in accordance with the foregoing Decision.

[FR Doc. 90–10206 Filed 5–1–90; 8:45 am]

BILLING CODE 6450–01–M

[12] In other refund proceedings, we have stated that spot purchasers applicants wishing to rebut the spot purchaser presumption should demonstrate that they made the spot purchases in order to fulfill obligations to their base period customers and resold the petroleum products at a loss.

FEDERAL COMMUNICATIONS COMMISSION

Public Information Collection Requirements Submitted to the Office of Management and Budget for Review

April 24, 1990.

The Federal Communications Commission has submitted the following information collection requirements to OMB for review and clearance under the Paperwork Reduction Act of 1980 (44 U.S.C. 3507).

Copies of these submissions may be purchased from the Commission's copy contractor, International Transcription Service, (202) 857–3800, 2100 M Street NW., Suite 140, Washington, DC 20037. For further information on these submissions contact Judy Boley, Federal Communications Commission, (202) 632–7513. Persons wishing to comment on these information collections should contact Eyvette Flynn, Office of Management and Budget, Room 3235 NEOB, Washington, DC 20503, (202) 395–3785.

OMB Number: 3060–0236
Title: Section 74.703, Interference
Action: Extension
Respondents: Businesses or other for-profit (including small businesses)
Frequency of Response: On occasion
Estimated Annual Burden: 10 Responses; 20 Hours
Needs and Uses: Section 74.703(f) requires licensees of low power TV or TV translator stations causing interference to other stations to submit a report to the FCC detailing the nature of interference, source of interfering signals, and remedial steps taken to eliminate the interference. This report is to be submitted after operation of the station has resumed. The data is used by FCC staff to determine that the licensee has eliminated all interference caused by operation of their station.

OMB Number: 3060–0248
Title: Section 74.751, Modification of Transmission System
Action: Extension
Respondents: Businesses or other for-profit (including small businesses)
Frequency of Response: On occasion
Estimated Annual Burden: 289 Responses; 280 Recordkeepers; 280 Hours

Needs and Uses: Section 74.751(c) requires licensees of low power TV or TV translator stations to send written notification to the FCC of equipment changes which may be made at licensee's discretion without the use of a

formal application. Section 74.751(d) requires that licensees of low power TV or TV translator stations place in the station records a certification that the installation of new or replacement transmitting equipment complies in all respects with the technical requirements of this section and the station authorization. The notifications and certifications of equipment changes are used by FCC staff to assure that the equipment changes made are in full compliance with the technical requirements of this section and the station authorizations and will not cause interference to other authorized stations.

Federal Communications Commission.

Donna R. Searcy,

Secretary.

[FR Doc. 90-10121 Filed 5-1-90; 8:45 am]

BILLING CODE 6712-01

[General Docket No. 89-78; FCC 90-142]

Inquiry into the Need for a Universal Encryption Standard for Satellite Cable Programming

AGENCY: Federal Communications Commission.

ACTION: Notice; availability of report.

SUMMARY: This Report examines "the need for a universal encryption standard that permits decryption of satellite cable programming intended for private viewing," and concludes that a mandatory standard would not serve the public interest. Congress, through the Satellite Home Viewer Act of 1988, instructed the Federal Communications Commission to undertake this inquiry.

FOR FURTHER INFORMATION CONTACT: Jonathan D. Levy, Office of Plans and Policy; (202) 653-5940.

SUPPLEMENTARY INFORMATION: This is a summary of the Commission's Report in General Docket No. 89-78, FCC 90-142, Adopted April 12, 1990 and released April 25, 1990. The full text of this Commission document is available for inspection and copying during normal business hours in the FCC Dockets Branch (room 230), 1919 M Street NW., Washington, DC 20554. The complete text may also be purchased from the Commission's copy contractor, International Transcription Service, (202) 857-3800, 2100 M Street NW., suite 140, Washington, DC 20037.

Summary of Report

This report finds that mandatory encryption standards for satellite cable programming would not serve the public interest. The inquiry in this proceeding was conducted pursuant to Congressional instructions in the Satellite Home Viewer Act of 1988.

The report finds that the Videocipher II system remains the *de facto* industry standard, notwithstanding the prospective launch of certain satellite services that are unlikely to utilize it. Dish owners wishing to receive satellite cable programming still need purchase only one decoder.

Moreover, mandatory standards would disadvantage consumers by reducing the incentives for technical advance in encryption technology and retarding the adoption of innovations. In particular, standards would limit the flexibility of programmers and manufactuers to adjust encryption systems in response to theft of satellite services ("piracy"), which is the industry's number one problem. Moreover, adoption of a standard could lead to disclosure of information that would help signal pirates.

The Videocipher II system is covered by patents owned by the General Instrument Corporation. That firm has recently introduced what it describes as a "new generation" of decoder, the Videocipher II PLus, which is designed to be much more resistant to tampering than is the Videocipher II. The report concludes that the Videocipher II Plus will not obsolete legally-authorized Videocipher II decoders.

The report also finds adoption of a standard *per se* would not affect decoder prices nor have an impact on the related matter of competition in the manufacture of decoders. Prices and competition among decoder producers would depend on the particular characteristics of the standard chosen and on the licensing practices of the owners of any proprietary technology involved.

The report considers concerns expressed by some commenters regarding the licensing and other commercial practices of General Instrument Corporation. Because Videocipher II equipment is widely available, and in deference to the underlying patent law, the report finds that no additional regulatory oversight of the General Instrument Corporation by the Commission is appropriate at this time. Nevertheless, the report declares thta the Commission will not ignore evidence of abuse by patent owners of any proprietary technology used in the encryption of satellite cable programming.

The report also examines the potential effect of a Commission standard setting proceeding on the home satellite dish industry. Based on past experience, such a proceeding, and the attendant litigation, could take years. During that time, it is likely that satellite equipment sales would drop significantly and the industry's incentives to combat piracy would be diminished. The lengthy period of uncertainty associated with this process could also retard the introduction of new program services.

Federal Communications Commission.

Donna R. Searcy,

Secretary.

[FR Doc. 90-10122 Filed 5-1-90; 8:45 am]

BILLING CODE 6712-01-M

FEDERAL ELECTION COMMISSION

Filing Dates for the New Jersey Special Elections

AGENCY: Federal Election Commission.

ACTION: Notice of filing dates for special elections.

SUMMARY: New Jersey has scheduled special elections on June 5, 1990, and November 6, 1990, in the First Congressional District to fill the seat of former Representative James J. Florio.

Committees required to file reports in connection with the Special Primary Election should file a 12-day Pre-Primary Report by May 24, 1990. Committees required to file reports in connection with both the Special Primary and Special General Election to be held on November 6, 1990, must file a 12-day Pre-Primary Report, a 12-day Pre-General Report by October 25, 1990, and a Post-General Report by December 6, 1990.

FOR FURTHER INFORMATION CONTACT: Ms. Bobby Werfel, Public Information Office, 999 E Street NW., Washington, DC 20463, Telephone: (202) 376-3120; Toll Free (800) 424-9530.

SUPPLEMENTARY INFORMATION: All principal campaign committees of candidates in the Special Primary Election and all other political committees for filing monthly, which support candidates in the Special Primary shall file a 12-day Pre-Primary Report by May 24, 1990, with coverage dates form the last report filed through May 16, 1990. Committees must also file a July Quarterly Report, with coverage dates from May 17, 1990, through June 30, 1990, due July 15, 1990; and an October Quarterly Report, with coverage dates from July 1, 1990, through September 30, 1990, due October 15, 1990.

All principal campaign committees of candiates in the special general election and all other political committees which support candidates in this election shall file a 12-day Pre-General election report due on October 25, 1990, with coverage dates from October 1, 1990, through October 17, 1990, and a 30-day post-general report due on December 6, 1990.

with coverage dates from October 18, 1990, through November 26, 1990. Committees must also file a Year-End Report due January 31, 1991.

CALENDAR OF REPORTING DATES FOR NEW JERSEY SPECIAL ELECTIONS

Report	Period covered [1]	Reg./cert. mailing date [2]	Filing date
All Committees Involved in the June 5 Special Primary Must File:.			
Pre-Primary	04/01/90—05/16/90	05/21/90	05/24/90
July Quarterly	05/17/90—06/30/90	07/15/90	07/15/90
October Quarterly	07/01/90—09/30/90	10/15/90	10/15/90

Report	Period covered [1]	Reg./cert. mailing date [2]	Filing date
All Committees Involved in the November 6 Special General Must File:.			
October Quarterly	07/01/90—09/30/90	10/15/90	10/15/90
Pre-General	10/01/90—10/17/90	10/22/90	10/25/90
Post-General	10/18/90—11/26/90	12/06/90	12/06/90

Note: Principal campaign committees that are reporting activity for both the regularly scheduled and special elections should indicate this on the summary page of Form 3 and supporting schedules, as appropriate. If the candidate has authorized a separate principal campaign committee for the special elections, this committee must file separate reports to disclose the financial activity.

[1] The period begins with the close of books of the last report filed by the committee. If the committee has filed no previous reports, the period begins with the date of the committee's first activity.

[2] Reports sent by registered or certified mail must be postmarked by the mailing date. Otherwise, they must be received by the filing date.

Dated: April 26, 1990.

Lee Ann Elliott,

Chairman, Federal Election Commission.

[FR Doc. 90–10148 Filed 5–1–90; 8:45 am]

BILLING CODE 6715–01–M

DEPARTMENT OF HEALTH AND HUMAN SERVICES

Food and Drug Administration

Cargill, Inc.-Nutrena Feed Div.; Tyson Foods, Inc.; Withdrawal of Approval of NADA's

AGENCY: Food and Drug Administration.

ACTION: Notice.

SUMMARY: The Food and Drug Administration (FDA) is withdrawing approval of two new animal drug applications (NADA's), one held by Cargill, Inc.-Nutrena Feed Div. and the other by Tyson Foods, Inc. The NADA's provide for the use of what is now called tylosin Type B medicated feed for making Type C medicated swine feed. The firms requested withdrawal of approval of the NADA's.

EFFECTIVE DATE: May 14, 1990.

FOR FURTHER INFORMATION CONTACT: Mohammad I. Sharar, Center for Veterinary Medicine (HFV–216), Food and Drug Administration, 5600 Fishers Lane, Rockville, MD 20857, 301–443–4093.

SUPPLEMENTARY INFORMATION: Cargill, Inc.-Nutrena Feed Div., P.O. Box 5614, Minneapolis, MN 55440, is the sponsor of NADA 102–717, originally approved April 7, 1976 (41 FR 14732) for Neese & Sons, Inc. The NADA was subsequently transferred October 5, 1979 (44 FR 57389) to Cargill, Inc. Tyson Foods, Inc., 2210 Oaklawn, Drawer E, Springdale, AR 72765–2020, is the sponsor of NADA 121–290, originally approved December 19, 1980 (45 FR 83484). Both NADA's provide for the use of what is now called tylosin Type B medicated feed to make Type C medicated swine feed. By separate letters of October 31, 1989, both Cargill, Inc., and Tyson Foods, Inc., requested withdrawal of approval of their NADA's because neither firm has manufactured or marketed their product for several years.

Therefore, under authority delegated to the Commissioner of Food and Drugs (21 CFR 5.10) and redelegated to the Center for Veterinary Medicine (21 CFR 5.84), notice is given that approval of NADA's 102–717 and 121–290 and all supplements thereto is hereby withdrawn, effective May 14, 1990.

In a final rule published elsewhere in this issue of the **Federal Register**, FDA is amending 21 CFR 510.600 (c)(1) and (c)(2), and 558.625 (b)(47) and (b)(75) to reflect the withdrawal of approval of these NADA's.

Dated: April 26, 1990.

Richard H. Teske,

Deputy Director, Center for Veterinary Medicine.

[FR Doc. 90–10159 Filed 5–1–90; 8:45 am]

BILLING CODE 4160–01–M

[Docket No. 90P–0113]

Sour Cream Deviating From Identity Standard; Temporary Permit for Market Testing

AGENCY: Food and Drug Administration.

ACTION: Notice.

SUMMARY: The Food and Drug Administration (FDA) is announcing that a temporary permit has been issued to the T. Marzetti Co. to market test a product designated as "light sour cream" the deviates from the U.S. standard of identity for sour cream (21 CFR 131.160). The purpose of the temporary permit is to allow the applicant to measure consumer acceptance of the product.

DATES: This permit is effective for 15 months, beginning on the date the food is introduced or caused to be introduced into interstate commerce, but not later than July 31, 1990.

FOR FURTHER INFORMATION CONTACT: Shellee A. Davis, Center for Food Safety and Applied Nutrition (HFF–414), Food and Drug Administration, 200 C Street, SW., Washington, DC 20204, 202–485–0343.

SUPPLEMENTARY INFORMATION: In accordance with 21 CFR 130.17 concerning temporary permits to facilitate market testing of foods deviating from the requirements of the standards of identity promulgated under section 401 of the Federal Food, Drug, and Cosmetic Act (21 U.S.C. 341), FDA is giving notice that a temporary permit

has been issued to the T. Marzetti Co., 1105 Schrock Rd., Box 29163, Columbus, OH 43229.

The permit covers limited interstate marketing tests of a product that deviates from the U.S. standard of identity for sour cream in 21 CFR 131.160 in that: (1) The fat content of the product is reduced from 18 percent to 9 percent, and (2) sufficient vitamin A palmitate is added in a suitable carrier to ensure that a 2-tablespoon serving of the product contains 4 percent of the U.S. Recommended Daily Allowance for vitamin A. The product meets all requirements of the standard with the exception of these deviations. The purpose of the variation is to offer the consumer a product that is nutritionally equivalent to sour cream but contains fewer calories and less fat.

For the purpose of this permit, the name of the product is "light sour cream." The principal display panel of the label must include the statements "reduced calories" and "reduced fat" following the name. In addition, the label must bear the comparative statements "⅓ fewer calories" and "½ the fat of sour cream".

The product complies with the reduced calorie labeling requirements in 21 CFR 105.66(d). In accordance with FDA's current views, reduced-fat food labeling is acceptable because there is at least a 50-percent reduction in the fat content of the product. The information panel of the label will bear nutrition labeling in accordance with 21 CFR 101.9.

This permit provides for the temporary marketing of 500,000 quarts of the test product. The product will be manufactured at the T. Marzetti Co., Allen Division, 1709 Frank Rd., P.O. Box 453, Columbus, OH 43216, and distributed in Connecticut, Delaware, Florida, Georgia, Illinois, Indiana, Iowa, Kansas, Kentucky, Maryland, Massachusetts, Michigan, Missouri, New Jersey, New York, North Carolina, Ohio, Pennsylvania, South Carolina, Tennessee, Texas, Virginia, West Virginia, Wisconsin, and the District of Columbia.

Each of the ingredients used in the food must be stated on the label as required by the applicable sections of 21 CFR part 101. This permit is effective for 15 months, beginning on the date the food is introduced or caused to be introduced into interstate commerce, but not later than July 31, 1990.

Dated: April 17, 1990.

Fred R. Shank,

Director, Center for Food Safety and Applied Nutrition.

[FR Doc. 90-10115 Filed 5-1-90; 8:45 am]

BILLING CODE 4160-01-M

[Docket No. 84G-0191]

Amerace Corp.; Withdrawal of GRAS Affirmation Petition

AGENCY: Food and Drug Administration, HHS.

ACTION: Notice.

SUMMARY: The Food and Drug Administration (FDA) is announcing the withdrawal without prejudice of a petition (GRASP 3G0285) requesting that the agency affirm that the use of an insoluble lactase enzyme preparation for use in making lactose hydrolyzed whey, lactose hydrolyzed whey permeate, and lactose hydrolyzed milk permeate is generally recognized as safe (GRAS).

FOR FURTHER INFORMATION CONTACT: Geraldine E. Harris, Center for Food Safety and Applied Nutrition (HFF-334), Food and Drug Administration, 200 C Street SW., Washington, DC. 20204, 202-426-9463.

SUPPLEMENTARY INFORMATION: In the Federal Register of June 18, 1984 (49 FR 24952), FDA published a notice that a petition (GRASP 3G0285) had been filed by Amerace Corp., Ace Rd., Butler, NJ 07405. This petition asked that the agency affirm that the use of an insoluble lactose enzyme preparation derived from *Aspergillus niger* and immobilized with glutaraldehyde and polyethyleneimine for use in producing lactose hydrolyzed whey, whey permeate, and milk permeate is GRAS. That notice was corrected on August 31, 1984 (49 FR 34579) to reflect that the petition requested the agency to affirm that the use of an insoluble lactase enzyme preparation derived from *Aspergillus oryzae* and immobilized with glutaraldehyde and polyethyleneimine for use in producing lactose hydrolyzed whey, lactose hydrolyzed whey permeante, and lactose hydrolyzed milk permeate is GRAS.

On January 9, 1986, FDA asked the firm for additional data to support the petition. This data has never been submitted to the agency.

On May 11, 1989, the agency contacted the firm by letter, again requesting the additional data and asking for a statement of the firm's intent with regard to the petition. However, the agency received no response from the firm.

Consequently, on February 7, 1990, FDA wrote the firm and advised it that because of the firm's lack of action in response to the communications between the agency and the firm, FDA was going to publish a notice in the Federal Register advising that it considered he petition to be withdrawn. More than 60 days have passed since that letter was sent, and the firm has not voiced any objection to the projected course of action. Therefore, the agency is announcing that it considers this petition to be withdrawn by the firm in accordance with 21 CFR 171.7(b).

Dated: April 18, 1990.

Fred R. Shank,

Director, Center for Food Safety and Applied Nutrition.

[FR Doc. 90-10116 Filed 5-1-90; 8:45 am]

BILLING CODE 4160-01-M

[Docket No. 90E-0103]

Determination of Regulatory Review Period for Purpose of Patent Extension; Pindac®

AGENCY: Food and Drug Administration.

ACTION: Notice.

SUMMARY: The Food and Drug Administration (FDA) has determined the regulatory review period for Pindac® and is publishing this notice of that determination as required by law. FDA has made the determination because of the submission of an application to the Commissioner of Patents and Trademarks, Department of Commerce, for the extension of a patent which claims that human drug product.

ADDRESSES: Written comments and petitions should be directed to the Dockets Management Branch (HFA-305), Food and Drug Administration, rm. 4-62, 5600 Fishers Lane, Rockville, MD 20857.

FOR FURTHER INFORMATION CONTACT: I. David Wolfson, Office, of Health Affairs (HFY-20), Food and Drug Administration, 5600 Fishers Lane, Rockville, MD 20857, 301-442-1382.

SUPPLEMENTARY INFORMATION: The Drug Price Competition and Patent Term Restoration Act of 1984 (Pub. L. 98-417) and the Generic Animal Drug and Patent Term Restoration Act (Pub. L. 100-670) generally provide that a patent may be extended for a period of up to 5 years so long as the patented item (human drug product, animal drug product, medical device, food additive, or color additive) was subject to regulatory review by FDA before the item was marketed. Under these acts, a product's regulatory review period forms the basis for

determining the amount of extension an applicant may receive.

A regulatory review period consists of two periods of time: a testing phase and an approval phase. For human drug products, the testing phase begins when the exemption to permit the clinical investigations of the drug becomes effective and runs until the approval phase begins. The approval phase starts with the initial submission of an application to market the human drug product and continues until FDA grants permission to market the drug product. Although only a portion of a regulatory review period may count toward the actual amount of extension that the Commissioner of Patents and Trademarks may award (for example, half the testing phase must be subtracted as well as any time that may have occurred before the patent was issued), FDA's determination of the length of a regulatory review period for a human drug product will include all of the testing phase and approval phase as specified in 35 U.S.C. 156(g)(1)(B).

FDA recently approved for marketing the human drug product Pindac® (pinacidil) which is indicated for the treatment of hypertension. Subsequent to this approval, the Patent and Trademark Office received a patent term restoration application for Pindac® (U.S. Patent No. RE 31,244) from Eli Lilly and Co. and requested FDA's assistance in determining the patent's eligibility for patent term restoration. FDA, in a letter dated March 27, 1990, advised the Patent and Trademark Office that the human drug product had undergone a regulatory review period and that the approval of the active ingredient, pinacidil, represented the first permitted commercial marketing or use of the product. Shortly thereafter, the Patent and Trademark Office requested that FDA determine the product's regulatory review period.

FDA has determined that the applicable regulatory review period for Pindac® is 2,702 days. Of this time, 1,090 days occurred during the testing phase of the regulatory review period, while 1,612 days occurred during the approval phase. These periods of time were derived from the following dates:

1. *The date an exemption under section 505(i) of the Federal Food, Drug, and Cosmetic Act became effective:* August 7, 1982. FDA has verified the applicant's claim that August 7, 1982, was the date the investigational new drug (IND) application for Pindac® became effective.

2. *The date the application was initially submitted with respect to the human drug product under section 505(b) of the Federal Food, Drug, and Cosmetic Act:* July 31, 1985. FDA has verified the applicant's claim that July 31, 1985, was the date the new drug application (NDA) for Pindac® (NDA 19–456) was initially submitted.

3. *The date the application was approved:* December 28, 1989. FDA has verified the applicant's claim that NDA 19–456 was approved December 28, 1989.

This determination of the regulatory review period establishes the maximum potential length of a patent extension. However, the U.S. Patent and Trademark Office applies several statutory limitations in its calculations of the actual period for patent extension. In its application for patent extension, this applicant seeks 731 days of patent extension.

Anyone with knowledge that any of the dates as published is incorrect may, on or before July 2, 1990, submit to the Dockets Management Branch (address above) written comments and ask for a redetermination. Furthermore, any interested person may petition FDA, on or before October 29, 1990, for a determination regarding whether the applicant for extension acted with due diligence during the regulatory review period. To meet its burden, the petition must contain sufficient facts to merit an FDA investigation. (See H. Rept. 857, part 1, 98th Cong., 2d Sess., pp. 41–42, 1984.) Petitions should be in the format specified in 21 CFR 10.30.

Comments and petitions should be submitted to the Dockets Management Branch (address above) in three copies (except that individuals may submit single copies) and identified with the docket number found in brackets in the heading of this document. Comments and petitions may be seen in the Dockets Management Branch between 9 a.m. and 4 p.m., Monday through Friday.

Dated: April 17, 1990.

Stuart L. Nightingale,

Associate Commissioner for Health Affairs.

[FR Doc. 90–10114 Filed 5–1–90; 8:45 am]

BILLING CODE 4160–01–M

Health Care Financing Administration

[BPO–086–GNC]

Criteria and Standards for Evaluating Intermediary and Carrier Performance

AGENCY: Health Care Financing Administration (HCFA), HHS.

ACTION: General notice with comment period.

SUMMARY: This notice describes the criteria and standards to be used for evaluating the performance of fiscal intermediaries and carriers in the administration of the Medicare program beginning June 1, 1990. The results of these evaluations are considered whenever HCFA enters into, renews, or terminates an intermediary or carrier agreement or takes other contract actions; assigns or reassigns providers of services to an intermediary; or designates regional or national intermediaries.

This notice is published in accordance with sections 1816(f) and 1842(b)(2) of the Social Security Act, which requires us to publish for public comment in the **Federal Register** those criteria and standards against which we evaluate intermediaries and carriers.

DATES: The criteria and standards are effective June 1, 1990. We will consider revising the criteria and standards based on public comments. Comments will be considered if we receive them at the appropriate address as provided below no later than 5:00 p.m. (e.d.t.) on June 1, 1990.

ADDRESSES: Mail comments to the following address: Health Care Financing Administration, Department of Health, and Human Services, Attention: BPO–086–GNC, P.O. Box 26676, Baltimore, Md. 21207.

If you prefer, you may deliver your comments to one of the following addresses: Room 309–G Hubert H. Humphrey Building, 200 Independence Avenue, SW., Washington, DC., or Room 132, East High Rise Building, 6325 Security Boulevard, Baltimore, Maryland.

Due to staffing and resource limitations, we cannot accept facsmile (FAX) copies of comments.

In commenting, please refer to file code BPO–086–GNC. Comments will be available for public inspection as they are received, generally beginning approximately three weeks after publication, in Room 309–G of the Departments's office at 200 Independence Avenue, SW., Washington, DC 20201, on Monday through Friday of each week from 8:30 a.m. to 5:00 p.m. (202–245–7890).

FOR FURTHER INFORMATION CONTACT: Steward H. Streimer, (301) 966–7409.

SUPPLEMENTARY INFORMATION:

A. Background

Under section 1816 of the Social Security Act, public or private organizations and agencies participate in the administration of Part A (Hospital Insurance) of the Medicare program under agreements with the Secretary of Health and Human Services. These agencies or organizations, known as

fiscal intermediaries, perform bill processing and benefit payment functions for the Medicare program. Most providers of services (such as hopsitals, skilled nursing facilities (SNFs), and home health agencies (HHAs)) submit bills to these intermediaries, which determine whether the services are covered under Medicare and determine correct payment amounts. The intermediaries then make payments to the providers on behalf of the beneficiaries.

Under section 1842 of the Act, we are authorized to enter into contracts with carriers to fullfill various functions in the administration of Part B (Supplementary Medical Insurance) of the Medicare program. Beneficiaries, physicians and suppliers of services submit claims to these carriers. The carriers determine whether the services are covered under Medicare and the reimbursable amount (usually on the basis of reasonable charges) for the services or supplies and then make payment to the appropriate party.

Under section 1816(f) of the Act, we are required to develop critiera, standards, and procedures to evaluate an intermediary's performance of its functions under its agreement with us. We evaluate intermediary performance through the Contractor Performance Evaluation Program (CPEP). Our regulations at 42 CFR 421.120 provide for publication of a **Federal Register** notice to announce criteria and standards prior to implementation.

Under section 1842(b)(2) of the Act, we are required to develop criteria, standards, and procedures to evaluate a carrrier's performance of its functions under its contract with us. Since 1981, we have evaluated carrier performance under CPEP using criteria and standards similar to those used for intermediaries. Under section 1842(a) of the Act, the Secretary is authoried to enter into contracts with carriers, including carriers with which agreements under section 1816 are in effect, to perform some or all of the Medicare Part B functions.

As a result of section 2326(c) of Pub. L. 98–369, the Deficit Reduction Act of 1984 (DEFRA) we publish in the **Federal Register** the criteria and standards used to evaluate both intermediaries and carriers in order to allow the public an opportunity to comment before implementing them. This notice announced the criteria and standards to be used to measure the effectiveness and efficiency of both intermediaries and carriers, beginning June 1, 1990.

B. Incentive Payments to Carriers

This notice also describes the methodology that will be used to award incentive payments to carriers that successfully increase the proportion of physicans in the carrier's service area who are participating physicans, or the proportion of payments to participating physicans.

This information is published in accordance with the Omnibus Budget Reconciliation Act of 1987 (OBRA 87, Pub. L. 100–203) which requires us to publish a description of our system for providing payment of a bonus to carriers based on their performance in increasing the proportion of physicians in the carrier's service area who are participating physicians or the proportion of payments for participating physicians' services in their service area.

We intend to issue the first carrier incentive payments on or before September 30, 1990 and all subsequent incentive payments by the September 30 following each annual enrollment period. The amount of these payments will be included in line 10 of the Notice of Budget Approval Form HCFA–1524. In this way, the amount of incentive payments are excluded from all claims processing unit cost calculations since unit costs are one of the measures used under the CPEP to evaluate carriers' acceptable performance in claims processing.

Section 2306 of DEFRA established the Medicare participating physician program. Participating means accepting assignment on all Medicare claims. Accepting assignment means physicians accept Medicare's approved charge as full payment. The main goal of the program is to reduce the impact of medical costs upon beneficiaries by establishing incentives for physicians to accept assignment on all Medicare claims. The provisions give all physicians an opportunity annually to enroll or disenroll as a Medicare participating physician.

Section 9332(a) of Pub. L. 99–509, the Omnibus Budget Reconciliation Act of 1986 (OBRA 86), and section 4085(i)(21)(B) of OBRA 87 require Medicare carriers to implement programs to recruit and retain physicians as participating physicians. These programs include educational and outreach activities and the use of professional relations personnel to handle billing and other problems relating to payment of claims of participating physicians; and programs to familiarize beneficiaries with the participating physician program and to assist the beneficiaries in locating participating physicians.

We intend to pay incentive bonuses to any carrier that achieved an increase of at least one-tenth of one percent in the participating physicians rate or proportion of total payments for participating physicians' services in the carrier's total service area. As required by section 9332(a) of OBRA 86 and section 4085 of OBRA 87, the amount of the total incentive payable to carriers is one percent of their total claims processing costs for the fiscal year. The total incentive pool is calculated by summing the total claims processing costs reported by each carrier in the fiscal year and multiplying the total by one percent.

For the purpose of determining each carrier's eligibility for an incentive payment, we make two comparisons. We compare the carrier's physician participation rate after the latest enrollment period with its physician participation rate after the prior enrollment date. We make a similar comparison of the proportion of covered charges for services by participating physicians during the quarter following the enrollment period with those of the quarter following the prior enrollment period. We intend to use whichever difference yields the higher percentage increase to determine eligibility for award of the incentive payment.

A more in-depth discussion and sample calculations of incentive payments to carriers were published in the October 11, 1988 **Federal Register** (53 FR 39645).

C. Criteria and Standards—General

We have retained the FY 1989 design of CPEP and have made changes only where necessary to improve the standards already existing, or to comply with recent legislative mandates. In maintaining the basic design of CPEP, we have retained the same functional criteria for both intermediaries and carriers. For intermediaries, there are 11 separate functional criteria, and for carriers, there are 10. Within each functional criterion we have identified the performance standards which, when measured, will evidence how well each contractor is performing. Each of these standards will fall into one of the three basic key indicators or categories (cost, quality (accuracy of contractor's decisions, correspondence, reports, and documentation) or timeliness) and each will be assigned points ranging from one to 160.

In addition, effective with this notice, there is a major change, in comparison to prior years, to the content of the

notice. This notice has been expanded to include the performance level required to pass each standard. This supplement to the past practice of only publishing the criteria and standards will provide the public with additional information regarding contractor performance expectations. It will also promote more meaningful comment on the criteria and standards.

To the extent possible, we will make every effort to publish the criteria and standards prior to the beginning of the federal fiscal year; *i.e.* on October 1st, in which case the evaluation period which the criteria and standards will measure will be on a fiscal year basis. If we do not publish a **Federal Register** notice before the next fiscal year begins, readers may presume that until and unless notified otherwise, the criteria and standards which were in effect for the previous fiscal year remain in effect to measure performance for the upcoming fiscal year.

In those instances where we are able to meet our goal of publishing the subject **Federal Register** notice before the beginning of the fiscal year, we reserve the right to publish the criteria and standards notice at any subsequent time during the year. If we choose to publish a notice in this manner, the evaluation period for any such standards and criteria which are the subject of the notice will be revised to be effective on or after the first day of the first month following publication. Hence, any such standards and criteria will measure performance prospectively; that is, we will not apply such new measurements to assess performance on a retroactive basis.

Also, it is not our intention to revise either the evaluation period or the standards and criteria which will be used during the evaluation period once this information has been published in a **Federal Register** notice. However, on occasion, either because of Administrative mandate or Congressional action, there may be a need for changes which have direct impact upon the criteria and standards previously published, or which require the addition of new criteria and standards, or which cause the deletion of previously published standards and criteria. Should such changes be necessitated, we will issue a **Federal Register** notice prior to implementation. The evaluation period for any new standards and criteria or for any standards and criteria which have been changed will not be effective any earlier than the first day of the first month following publication.

In all instances, necessary manual issuances will be published each year to ensure that the criteria and standards are implemented uniformly and accurately.

Also, as in previous years due to the time constraints, the **Federal Register** notice will be republished and the effective date revised if changes are warranted as a result of the public comments received on the standards and criteria.

Action Based on Performance Evaluations

We may initiate administrative actions as a result of the evaluation of intermediary and carrier performance based on these performance criteria and standards. Under sections 1816 and 1842 of the Social Security Act, we consider the results of the evaluation in our determinations on:

1. Entering into, renewing, or terminating agreements with contractors; and

2. Decisions concerning other contract actions for intermediaries and carriers (such as deletion of an automatic renewal clause). These are made on a case-by-case basis and depend primarily on the nature and degree of performance. More specifically, they depend on:

a. Relative overall performance compared to other contractors;

b. Number of standards in which superior, average, or deficient performance occurs;

c. Extent of each deficiency; and

d. Relative significance of the standards for which superior or deficient performance occurs within the overall CPEP.

In addition, we consider the results of the intermediary evaluation in determinations we make concerning assignment or reassignment of providers and designation of regional or national intermediaries for classes of providers.

We make individual contract action decisions after considering these factors in terms of their relative significance and impact on the efficient administration of the Medicare Program.

D. Scoring System

For both intermediaries and carriers, the maximum score attainable is 1000 points. Each of the CPEP's functional criteria is assigned a given portion of the 1000 available points. One of the requirements for passing CPEP is that 70 percent of the available points for each criterion must be attained.

In addition, with a functional criterion is one or more standards categorized as either a cost, quality, or timeliness measure. Each of the standards is assigned a portion of the total points for that functional criterion. Each standard has a method of evaluation that is used to calculate a rating based on a contractor's performance in that standard. The second requirement for passing CPEP is that 70 percent of the total points assigned to the cost standards, quality/accuracy standards, and timeliness standards must also be attained.

A contractor's performance is evaluated against each applicable standard. In general, if a contractor exactly meets the performance level established for a standard, it achieves 70 percent of the points (or in a few instances, more than 70 percent of the points) allocated to that standard, to which we refer as the threshold score (the passing level). Any rating below that threshold (i.e., usually less than 70 percent) constitutes a deficiency. The contractor may be required to develop and implement a corrective action plan when performance problems are identified. The contractor will be monitored to assure effective and efficient compliance with the corrective action plan and improved performance where criteria and/or standards are not met.

E. Criteria and Standards for Intermediaries

As stated previously, we will use 11 criteria to evaluate the overall performance of an intermediary. They are: (1) Unit Cost; (2) Process Claims; (3) Audit; (4) Medical Review; (5) Medicare Secondary Payer; (6) Financial Management; (7) Beneficiary and Provider Services; (8) Reporting; (9) Fraud and Abuse; (10) Reimbursement; and (11) Management of Change.

The 11 criteria contain a total of 60 standards. There are 2 for Unit Cost, 9 for Process Claims, 3 for Audit, 5 for Medical Review, 3 for Medicare Secondary Payer, 5 for Financial Management, 5 for Beneficiary and Provider Services, 16 for Reporting, 3 for Fraud and Abuse, 4 for Reimbursement, and 5 for Management of Change.

1. Unit Cost Criterion (Total Points=95)

An intermediary must process all bills at an acceptable unit cost.

• Process bills at an acceptable unit cost (Standard 1=75 points) (Cost).

Passing Level:

Actual unit cost is 98%–100% of the FY 1990 NOBA=67.5 Points

• Process appeals at an acceptable unit cost (Standard 2=20 points (Cost).

Passing Level:

Actual unit cost 100.1%–101% of NOBA=14.0 Points

2. Process Claims Criterion (Total Points=135)

An intermediary must properly control and process bills from providers, and transmit accurate bill information to HCFA. The intermediary is required to meet the following standards:

• Pay clean non-Periodic Interim Payment (PIP) bills within mandated timeframes (Standard 1=35 points) (Timeliness).

Passing Level:

95.0%–95.9% paid within mandated timeframes=24.5 Points

• Process all bills within 60 days (Standard 2=15 points) (Timeliness).

Passing Level:

95.0%–95.9% processed within 60 days after the date of receipt=10.5 Points

• Process all bills within 90 days (Standard 3=15 points) (Timeliness).

Passing Level:

99.0%–99.3% processed within 90 days after the date of receipt=10.5 Points

• Control payment of interest on clean bills (Standard 4=10 points) (Cost).

Passing Level:

Interest maintained at .004%—.007% of benefit payments=7.0 Points

• Process adjustment records timely and return the adjusted records to the PRO (Standard 5=5 points) (Timeliness).

Passing Level:

89.8%—95.0% of the adjustments received, processed and returned to the PRO within 60 days=3.5 Points

• Assure that all Part A bills pass HCFA consistency edits (Standard 6=10 points) (Quality).

Passing Level:

98.0%—98.4% bills pass HCFA consistency edits=7.0 Points

• Process Returns to Intermediaries (RTIs) in a timely manner (Standard 7=7 points) (Timeliness).

Passing Level:

10.1%—15.0% RTIs pending 60 days or more=4.9 Points

• Process Returns to Intermediaries (RTIs) accurately (Standard 8=3 points) (Quality).

Passing Level:

5.1%–10.0% RTIs returned a second time=2.1 Points

• Process bills accurately (Standard 9=35 points) (Quality).

Passing Level:

95.0%–96.9% of test claims are accurate=24.5 Points

3. Audit Criterion (Total Points=100)

An intermediary must administer the program in a manner that achieves maximum savings and cost avoidance for the Medicare trust funds. We will use the standards below to evaluate the criterion. The intermediary is required to:

• Administer a cost-effective provider audit program (Standard 1=36 points) (Cost).

Passing Level:

6.00/1–6.99/1 audit return ratio=25.2 Points

• Perform properly when reviewing, auditing, adjusting, settling, and completing cost reports/statements (Standard 2=40 points) (Quality).

Passing Level:

85.0%–89.5% of work performed properly=28.0 Points

• Settle cost reports timely (Standard 3=24 points) (Timeliness).

Passing Level (3-part standard):

90.0%–94.9% of hospital reports settled timely: 70% of points allocated

80.0%–89.9% of freestanding HHA cost reports settled timely: 70% of points allocated

86.3%–92.9% of freestanding SNF cost reports settled timely: 70% of points allocated

Points are allocated based upon contractor level of effort by provider type.

4. Medical Review Criterion (Total Points=125)

An intermediary must perform necessary Medical Review (MR) activities as required by HCFA instructions in a timely, accurate, and cost effective manner. The intermediary is required to meet the following standards:

• Make accurate coverage determinations (Standard 1=65 points) (Quality).

Passing Level:

93.7%–97.5% of cases reviewed are accurate=45.5 Points

• Assure the review of the HCFA mandated level of Skilled Nursing Facility (SNF) demand bills (Standard 2=10 points) (Quality).

Passing Level:

Intermediary in compliance with all requirements with minor modification recommended=7.0 Points

• Apply and update HCFA MR instructions (Standard 3=15 points) (Quality).

Passing Level:

Minor problems have been identified in the intermediary's compliance with HCFA instructions=10.5 Points

• Perform budgeted reviews (Standard 4=15 points) (Quality).

Passing Level:

97.5%–98.9% of budgeted reviews are performed=10.5 Points

• Identify providers for intensified review (Standard 5=20 points) (Quality).

Passing Level:

In areas where intermediary has flexibility to select claims for medical review, the intermediary used selection criteria which were based on the collection and analysis of data sufficient to reflect unusual or questionable patterns or trends in the provision of Medicare services. Patterns and trends were verified as requiring medical review attention and 90% of the providers and/or services identified are placed on review=14 Points

5. Medicare Secondary Payer Criterion (Total Points=80)

An intermediary must administer the program in a manner which achieves maximum savings and cost avoidance to the Medicare trust funds. We will use the standards below to evaluate an intermediary's administration of the Medicare Secondary Payer provisions. The intermediary is required to:

• Achieve Medicare Secondary Payer (MSP) savings goal (Standard 1=30 points) (Cost).

Passing Level:

If 50% or more of each sub goal is achieved

Achieved 95.0%–96.9% of targeted MSP goal=21.0 Points

If less than 50% of any sub goal is achieved

Achieved 100.0%–105.0% of targeted MSP goal=21.0 Points

• Update the Regional Data Exchange System or Common Working File (CWF) accurately (Standard 2=25 points) (Quality).

Passing Level:

Contractor has complied with all provisions of Part 3, § 3696, and has an acceptable level of effort at identification of possible MSP sources=17.5 Points

• Take actions to prevent inappropriate billings to the Medicare program (Standard 3=25 points) (Quality).

Passing Level:

Contractor has fully met all manual requirements for preventing inappropriate billings to the Medicare program=17.5 Points

6. Financial Management Criterion (Total Points=65)

An intermediary must take measures to protect the Medicare program and the

public interest. It must manage Federal funds for both benefit payments and cost of administration in accordance with its agreement with the Secretary, the Federal Acquisition Regulations (48 CFR Chapter 1), the HHS Acquisition Regulations (48 CFR Chapter 3), and HCFA instructions. The intermediary is required to meet the following standards:

• Ensure that costs are allowable, allocations are consistent (provide reasonable assurance that comparable transactions are treated alike) and chargeable to a particular cost objective in accordance with the relative benefits received or other equitable relationship (Standard 1=10 points) (Quality).

Passing Level:

The contractor has failed to implement or schedule corrective action for minor changes in its cost accounting system in the agreed upon timeframe=7.0 Points

• Ensure administrative funds drawn are in line with monthly expenditures (Standard 2=20 points) (Quality).

Passing Level:

The contractor has made a decrease adjustment on the next administrative draw, within 30 calendar days, following the submission of a monthly Interim Expenditure Report (IER) or a Final Administrative Cost Proposal (FACP), where applicable=20.0 Points

• Control actual expenditures on lines 1–12 to the latest approved budget (Standard 3=20 points) (Cost).

Passing Level:

Total cost Lines 1–12 is less than or equal to 100% of NOBA and the contractor has shifted no more than 5% into or out of any line=20.0 Points

• Manage the benefit and time accounts properly and in accordance with the Medicare bank agreement (Standard 4=5 points) (Quality).

Passing Level:

Contractor responds to RO request to initiate corrective action=3.5 Points

• Ensure proper expenditure of Payment Safeguard Funds (Standard 5=10 points) (Costs).

Passing Level:

Expended at least 95.0% of funds in *each* category=7.0 Points

7. Beneficiary and Provider Services Criterion (Total Points=100)

An intermediary must ensure that, in Medicare matters, beneficiaries and providers are treated according to law, regulations, and general instructions covering such areas as responding to correspondence and processing reconsiderations timely and accurately. The intermediary is required to meet the following standards:

• Process reconsiderations accurately (Standard 1=35 points) (Quality).

Passing Level:

89.8%–95.0% of reconsiderations processed accurately=24.5 Points

• Process reconsiderations timely (Standard 2=20 points) (Timeliness).

Passing Level (3-Part standard):

75.0%–84.9% of reconsiderations processed in 60 days=5.6 Points

90.0%–94.9% of reconsiderations processed in 90 days=4.9 Points

98.0%–98.9% of reconsiderations processed in 150 days=3.5 Points (Quality)

Passing Level:

93.7%–97.5% of correspondence processed accurately=17.5 Points

• Process correspondence timely (Standard 4=15 points) (Timeliness).

Passing Level:

89.8%–95.0% of correspondence answered within 30 calendar days=10.5 Points

• Assure reversal rate on appeals is appropriate (Standard 5=5 points) (Quality).

Passing Level:

89.8%–95.0% of cases are not in error=3.5 Points

8. Reporting Criterion (Total Points=60)

An intermediary must manage Federal funds for both benefit payments and cost of administration in accordance with its agreement with HHS and HCFA. The intermediary is required to meet the following standards:

• Submit accurate Plan of Expenditure Report (POEs) (Standard 1=3 points) (Quality).

Passing Level:

One report containing errors=2.1 Points

• Submit timely Plan of Expenditure Reports (POEs) (Standard 2=3 points) (Timeliness).

Passing Level:

Report(s) submitted with a cumulative total of less than 4 calendar days late=2.1 Points

• Submit accurate Interim Expenditure Reports (IERs) and Variance Analyses (Standard 3=6 points) (Quality).

Passing Level:

One report containing errors=4.2 Points

• Submit timely Interim Expenditure Reports (IERs) and Variance Analyses (Standard 4=6 points) (Timeliness).

Passing Level:

Report(s) submitted with a cumulative total of less than 4 calendar days late=4.2 Points

• Submit the Final Administrative Cost Proposal (FACP) accurately (Standard 5=2 points) (Quality).

Passing Level:

Report substantially in compliance with HCFA instructions=2.0 Points

• Submit the Final Administrative Cost Proposal (FACP) timely (Standard 6=2 points) (Timeliness).

Passing Level:

Report submitted on or before due date=2.0 Points

• Submit an accurate budget request (Standard 7=3 points) (Quality).

Passing Level:

Budget submitted substantially in compliance with budget guidelines=3.0 Points

• Submit the budget request timely (Standard 8=3 points) (Timeliness).

Passing Level:

All reports submitted on or before due date=3.0 Points

• Submit the Contractor Audit and Settlement Report (CASR) timely (Standard 9=6 points) (Timeliness).

Passing Level:

Report(s) submitted with a cumulative total of less than 3 calendar days late=4.2 Points

• Submit an accurate Provider Overpayment Report (POR) (Standard 10=5 points) (Quality).

Passing Level:

93.0%–95.7% of entries accurate=3.5 Points

• Submit the Provider Overpayment Report (POR) timely (Standard 11=5 points) (Timeliness).

Passing Level:

93.0% to 95.7% of entries submitted timely=3.5 Points

• Submit Intermediary Workload Report (HCFA–1566) and Quarterly Supplement (HCFA–1566A) timely (Standard 12=7 points) (Timeliness).

Passing Level:

Report(s) submitted with a cumulative total of less than 4 calendar days late=4.9 Points

• Submit accurate Reports of Benefit Savings (Standard 13=2 points) (Quality).

Passing Level:

All reports submitted with no material error(s)=2.0 Points

• Submit Reports of Benefit Savings timely (Standard 14=1 points) (Timeliness).

Passing Level:

Report(s) submitted with a cumulative total of less than 3 calendar days late=0.7 Points

• Enter appeals data timely (Standard 15=4 points) (Timeliness).

Passing Level:

85.1%–90.0% of data entered into Reconsideration Information Management System (RIMS) system timely=2.8 Points

• Submit provider specific payment data timely (Standard 16=2 points) (Timeliness).

Passing Level:

Required file is received within 15 calendar days of the end of the reporting period and corrections submitted within 10 calendar days of notification=1.4 Points

9. Fraud and Abuse Criterion (Total Points=70)

An intermediary must administer the program in a manner that achieves maximum savings and cost avoidance for the Medicare trust funds. The intermediary is required to meet the following standards:

• Detect fraud and abuse situations (Standard 1=35 points) (Quality).

Passing Level:

Demonstrates basic compliance with minor improvements needed=24.5 Points

• Develop potential fraud and abuse cases (Standard 2=25 points) (Quality).

Passing Level:

18–20 Sample Cases Reviewed 6–7 in error 17.5 Points
14–17 Sample Cases Reviewed 4–5 in error
8–13 Sample Cases Reviewed 2–3 in error
4–7 Sample Cases Reviewed 1 in error
1–3 Sample Cases Reviewed 0 in error (25 points)

• Ensure that no payments are made to excluded providers and physicians (Standard 3=10 points) (Quality).

Passing Level:

Contractor's procedures require minor modifications and corrective action is being, or is scheduled to be, taken=7.0 Points

10. Reimbursement Criterion (Total Points=75)

An intermediary must administer the program in a manner that achieves maximum savings and cost avoidance for the Medicare trust funds. The intermediary is required to meet the following standards:

• Establish interim payments to approximate reimbursable costs (Standard 1=50 points) (Quality).

Passing Level:

(96.0%–96.9%) or (101.3%–101.8%) (hospital) 70% of points allocated
(86.0%–88.4%) or (103.1%–104.0%) (freestanding SNF) 70% of points allocated
(94.0%–95.4%) or (101.9%–102.5%) (freestanding HHA) 70% of points allocated

Points are allocated based upon contractor level of effort by provider type.

• Collect provider overpayments timely (Standard 2=15 points) (Timeliness).

Passing Level:

35–37 Days=10.5 Points

• Submit timely cost report data for the Hospital Cost Report Information System (HCRIS) (Standard 3=5 points) (Timeliness).

Passing Level:

93.0%–97.0% of cost reports submitted timely=3.5 Points

• Submit accurate cost report data for the Hospital Cost Report Information System (HCRIS) (Standard 4=5 points) (Quality).

Passing Level:

94.0%–97.9%=3.5 Points

11. Management of Change Criterion (Total Points=95)

An intermediary must take measures to protect the Medicare program and the public interest. It must effectively manage Federal funds for both benefit payments and cost of administration in accordance with HCFA instructions. The intermediary is required to meet the following standards:

• Implement Priority I critical tasks accurately (Standard 1=25 points) (Quality).

Passing Level:

All tasks implemented with only 1 task requiring major changes corrected within the date negotiated with the RO and/or all tasks implemented accurately with no more than 7 tasks requiring minor RO-initiated changes=17.5 Points

• Implement Priority I critical tasks timely (Standard 2=35 points) (Timeliness).

Passing Level:

Cumulative late days do not exceed 30=24.5 Points

• Implement "other tasks" from the HCFA Contractor Task Management Plan accurately (Standard 3=10 points) (Quality).

Passing Level:

Four tasks implemented with minor errors or one task implemented with major errors=7.0 Points

• Implement "other tasks" from the HCFA Contractor Task Management Plan timely (Standard 4=10 points) (Timeliness).

Passing Level:

Seven tasks implemented on or before due date=7.0 Points

• Comply with regional office (RO) requests and instructions timely (Standard 5=15 points) (Timeliness).

Passing Level:

Two ore more directives not implemented timely but the length of delay(s) did not adversely impact on the program initiative(s)=10.5 Points

F. Criteria and Standards for Carriers

We will use 10 certeria to evaluate overall carrier performance. They are: (1) Unit Cost; (2) Process Claims; (3) Medical Review; (4) Medicare Secondary Payer; (5) Pricing and Coding; (6) Financial Management; (7) Beneficiary and Provider Services; (8) Reporting; (9) Fraud and Abuse; and (10) Management of Change. The 10 criteria contain a total of 75 standards. There are 3 for Unit Cost, 12 for Process Claims, 5 for Medical Review, 3 for Medicare Secondary Payer, 6 for Pricing and Coding, 5 for Financial Management, 14 for Beneficiary and Provider Services, 16 for Reporting, 6 for Fraud and Abuse, and 5 for Management of Change.

1. Unit Cost Criterion (Total Points=95)

A carrier must process all claims at an acceptable unit cost. The carrier is required to meet the following standards:

• Process claims at an acceptable unit cost (Standard 1=75 points) (Cost). The carrier is required to meet the following standards:

Passing Level:

Actual unit cost is 98%–100% of the FY 1990 NOBA=67.5 points

• Process appeals at an acceptable unit cost (Standard 2=10 points) (Cost).

Passing Level:

Actual unit cost 100.1%–101% of NOBA=7.0 Points

• Process inquires at an acceptable unit cost (Standard 3=10 points) (Cost).

Passing Level:

Actual unit cost 100.1%–101% of NOBA=7.0 Points

2. Process Claims Criterion (Total Points=160) A carrier must process part B Medicare claims to determine allowance or disallowance in accordance with general instructions. The carrier is required to meet the following standards:

• Process clean participating physician claims within mandated timeframes (Standard 1=20 points) (Timeliness).

Passing Level:

95.0%–95.9% processed within 17 days after the date of receipt=14.0 Points

• Process other clean claims within mandated timeframes (Standard 2=25 points) (Timeliness).

Passing Level:

95.0%–95.9% processed within 24 days after the date of receipt=17.5 Points

• Process all claims within 60 days (Standard 3=15 points) (Timeliness).

Passing Level:

95.0%–95.9% processed within 60 days after the date of receipt=10.5 Points

• Process all claims within 90 days (Standard 4=10 points) (Timeliness).

Passing Level:

98.5%–98.9% processed within 90 days after the date of receipt=7.0 Points

• Control payment of interest on clean claims (Standard 5=10 points) (Cost).

Passing Level:

Interest maintained at .022%–.035% of benefit payments=7.0 Points

• Maintain satisfactory underpayment deductible error rate (Standard 6=25 points) (Quality).

Passing Level:

Error rate of 0.51–0.70=17.5 Points

• Maintain satisfactory overpayment deductible error rate (Standard 7=25 points) (Quality).

Passing Level:

Error rate of .71–1.00=17.5 Points

• Prepare payment record tapes accurately (Standard 8=10 points) (Quality).

Passing Level:

Payment record reject rate of 0.6%–1.0%=7.0 Points

• Submit payment record in accordance with HCFA requirements (Standard 9=5 points) (Timeliness).

Passing Level:

85.0%–94.9% payment record batches received timely=3.5 Points

• Correct payment record rejects timely (Standard 10=5 points) (Timeliness).

Passing Level:

85.0%–94.9% payment record reject corrections received timely=3.5 Points

• Generate Explanations of Medicare Benefits (EOMBs) properly (Standard 11=5 points) (Quality).

Passing Level:

Error rate of 0.4–2.0=3.5 Points

• Ensure Regional Office (RO) approval of special messages (Standard 12=5 points) (Quality).

Passing Level:

Procedures in place/one message not approved=3.5 Points

3. Medical Review Criterion (Total Points=125)

A carrier must perform necessary Medical Review (MR) activities in accordance with HCFA instructions accurately, timely, and in a cost-effective manner. The carrier is required to meet the following standards:

• Make accurate coverage decisions based on carriers' guidelines (Standard 1=25 points) (Quality).

Passing Level:

93.7%–97.5% of cases reviewed are accurate=17.5 Points

• Administer a cost effective Medical Review (MR) program (Standard 2=25 points) (Cost).

Passing Level:

$5.00/1–$6.00/1 Medical Review return ratio=17.5 Points

• Conduct an effective postpayment program (Standard 3=30 points) (Quality).

Passing Level:

Carrier in compliance with all requirements=21.0 Points

• Apply appropriate HCFA Medical Review (MR) policies (Standard 4=15 points) (Quality).

Passing Level:

Carrier in compliance with all but one significant requirement=10.5 Points

• Develop effective medical coverage guidelines (Standard 5=30 points) (Quality).

Passing Level:

Carrier in compliance with all requirements=21.0 Points

4. Medicare Secondary Payer Criterion (Total Points=80)

A carrier must administer the Medicare program in a manner that achieves maximum savings and cost avoidance to the Medicare trust funds. The carrier is required to meet the following standards:

• Achieve Medicare Secondary Payer (MSP) savings goal (Standard 1=30 points) (Cost).

Passing Level:

Achieved 95.0%–95.9% of targeted MSP goal=21.0 Points

• Update the Regional Data Exchange System or Common Working File (CWF) accurately (Standard 2=25 Points) (Quality).

Passing Level:

Contractor has complied with all provisions of Part 3, § 4307, and has an acceptable level of effort for identification of possible MSP sources=17.5 Points

• Take actions to prevent inappropriate claims to the Medicare program (Standard 3=25 points) (Quality).

Passing Level:

Contractor has fully met all manual requirements for preventing inappropriate payments to the Medicare program=17.5 Points

5. Pricing and Coding Criterion (Total Points=100)

A carrier must accurately determine the amount of program payments allowed for covered services. The carrier is required to meet the following standards:

• Install and implement appropriate pricing accurately for Medicare covered new and cross referenced HCFA's Common Procedure Coding System (HCPCS) codes (Standard 1=20 points) (Quality).

Passing Level:

93.7%–97.5% of the codes correct=14.0 Points

• Implement HCPCS annual update timely (Standard 2=10 points) (Timeliness).

Passing Level:

Update installed on the due date=7.0 Points

• Perform reasonable charge determinations accurately (Standard 3=25 points) (Quality).

Passing Level:

Complied with all but 2 requirements=17.5 Points

• Update reasonable charges and install by due date (Standard 4=20 points) (Timeliness).

Passing Level:

Reasonable charge screens updated after the due date but before any claims with dates of service on or after the due date are paid=14.0 Points

• Install correction of reasonable charge screens by Regional Office (RO) due date (Standard 5=15 points) (Timeliness).

Passing Level:

Errors corrected on the RO due date=10.5 Points

• Comply with manual requirements on inherent reasonableness (IR) accurately (Standard 6=10 points) (Quality).

Passing Level:

95.0%–97.4% of all IR determinations follow manual instructions=7.0 Points

6. Financial Management Criterion (Total Points=65)

A carrier must take measures to protect the Medicare program and the public interest. It must manage Federal funds for both benefit payments and the cost of administration in accordance with its agreement with the Secretary,

the Federal Acquisition Regulations (48 CFR Chapter 1), the HHS Acquisition Regulations (48 CFR Chapter 3), and HCFA instructions. The carrier is required to meet the following:

• Ensure that costs are allowable, allocations are consistent (provide reasonable assurance that comparable transactions are treated alike) and chargeable to a particular cost objective in accordance with the relative benefits received or other equitable relationship (Standard 1=10 points) (Quality).

Passing Level:

The contractor has failed to implement or schedule corrective action for only minor changes in its cost accounting system in the agreed upon timeframe=7.0 Points

• Ensure administrative funds drawn are in line with monthly expenditures (Standard 2=20 points) (Quality).

Passing Level

The contractor has made a decrease adjustment on the next administrative draw, within 30 calendar days, following the submission of a monthly Interim Expenditure Report (IER) or a Final Administrative Cost Proposal (FACP), where applicable=20.0 Points

• Control actual expenditures on lines 1–11 to the latest approved budget (standard 3=20 points) (Cost).

Passing Level:

Total cost lines 1–11 is less than or equal to 100% of NOBA and the contractor has shifted no more than 5% into or out of any line=20.0 Points

• Manage the benefit and time accounts properly and in accordance with the Medicare bank agreement (Standard 4=5 points) (Quality).

Passing Level:

Contractor responds to RO request to initiate corrective action=3.5 Points

• Ensure proper expenditure of Payment Safeguard Funds (Standard 5=10 points) (Cost).

Passing Level:

Expended at least 95.0% of funds in each category=7.0 Points

7. Beneficiary and Provider Services Criterion (Total Points=150)

A carrier must ensure that, in Medicare matters, beneficiaries and providers are treated according to law, regulations, and general instructions covering areas such as responding to correspondence, issuing notices of determinations, and providing impartial reviews. The carrier is required to meet the following standards:

• Maintain proper level of telephone service (Standard 1=15 points) (Timeliness).

Passing Level:

5 reports received with ATB level at or below 20%=10.5 Points

• Respond timely to telephone inquiries (Standard 2=10 points) (Timeliness).

Passing Level:

95.0%–97.4% answered within 120 seconds=7.0 Points

• Complete reviews accurately (Standard 3=25 points) (Quality).

Passing Level:

89.8%–95.0% of reviews completed accurately=17.5 Points

• Furnish readable notice to beneficiary of review determinations (Standard 4=10 points) (Quality).

Passing Level:

89.8%–95.0% of notices with FOG index below 8=7.0 Points

• Complete reviews timely (Standard 5=20 points) (Timeliness).

Passing Level:

95.0%–97.0% of reviews completed within 45 calendar days=14.0 Points

• Respond accurately to correspondence (Standard 6=20 points) (Quality).

Passing Level:

93.7%–97.5% of correspondence answered accurately=14.0 Points

• Furnish readable response to beneficiary correspondence (Standard 7=10 points) Quality).

Passing Level:

89.8%–95.0% of responses with FOG index below 8=7.0 Points

• Respond timely to all correspondence (Standard 8=10 points) (Timeliness).

Passing Level:

89.8%–95.0% of correspondence answered within 30 calender days=7.0 Points

• Send out participation letters and reasonable charge/Maximum Allowable Actual Charge (MAAC) disclosure information timely to physicians and suppliers. (Standard 9=5 points) (Timeliness).

Passing Level:

Letters and disclosure information sent within 5 days of the due date=3.5 Points

• Prepare the Medicare Participating Physician/Supplier Directory (MEDPARD) timely (Standard 10=5 points) (Timeliness).

Passing Level:

MEDPARD prepared within 5 days of due date=3.5 Points

• Determine liability and properly dispose of beneficiary overpayment cases (Standard 11=5 points) (Quality).

Passing Level:

85.1%–90.0% of cases properly handled=3.5 Points

• Determine liability and properly dispose of physician/supplier overpayment cases (Standard 12=5 points) (Quality).

Passing Level:

85.1%–90.0% of cases properly handled=3.5 Points

• Complete carrier hearings timely (Standard 13=5 points) (Timeliness).

Passing Level:

90.0%–95.0% of hearings completed within 120 calender days=3.5 Points

• Furnish a complete hearing decision letter (Standard 14=5 points) (Quality).

Passing Level:

85.1%–90.0% of hearing decision letters complete=3.5 Points

8. Reporting Criterion (Total Points=60)

A carrier must manage Federal funds for both benefit payments and cost of administration in accordance with its agreement with HHS and HCFA. The carrier is required to meet the following standards:

• Submit accurate Plan of Expenditure Reports (POEs) (Standard 1=3 points) (Quality).

Passing Level:

One report containing errors=2.1 Points.

• Submit timely Plan of Expenditure Reports (POEs) (Standard 2=3 points) (Timeliness).

Passing Level:

Report(s) submitted with a cumulative total of less than 4 calendar days late=2.1 Points.

• Submit accurate Interim Expenditure Reports (IERs) and Variance Analyses (Standard 3=6 points) (Quality).

Passing Level:

One report containing errors=4.2 Points.

• Submit timely Interim Expenditure Reports (IERs) and Variance Analyses (Standard 4=6 points) (Timeliness).

Passing Level:

Report(s) submitted with a cumulative total of less than 4 calendar days late=4.2 Points.

• Submit the Final Administrative Cost Proposal (FACP) accurately (Standard 5=2 points) (Quality).

Passing Level:

Report substantially in compliance with HCFA instructions=2.0 Points.

• Submit the Final Administrative Cost Proposal (FACP) timely (Standard 6=2 points) (Timeliness).

Passing Level:

Report submitted on or before due date=2.0 Points.

• Submit an accurate budget request (Standard 7=3 points) (Quality).

Passing Level:

Budget submitted substantially in compliance with budget guidelines=3.0 Points.

• Submit the budget request timely (Standard 8=3 points) (Timeliness).

Passing Level:

All reports submitted on or before due date=3.0 Points.

• Submit Carrier Performance Report (HCFA–1565) and Quarterly Supplements (HCFA–1565A and HCFA–1565C) timely (Standard 9=7 points) (Timeliness).

Passing Level:

Report(s) submitted with a cumulative total of less than 4 calendar day late=4.9 Points.

• Submit accurate Quarterly Medical Review Reports (Standard 10=2 points) (Quality).

Passing Level:

Report submitted with one statistical error=1.4 Points.

• Submit Quarterly Medical Review Reports timely (Standard 11=1 points) (Timeliness).

Passing Level:

Report(s) submitted with a cumulative total of less than 4 calendar days late=0.7 Points.

• Submit Carrier Quality Assurance System (CQAS) data timely (Standard 12=4 points) (Timeliness).

Passing Level:

92.0%–96.9% of claims data reviewed and entered into CQAS within 45 days from date of sample=2.8 Points.

• Accurately enter data on physician/supplier overpayments into the Physician/Supplier Overpayment Report (PSOR) (Standard 13=3 points) (Quality).

Passing Level:

93.7%–97.5% of overpayment data accurately entered into PSOR=2.1 Points.

• Submit timely physician/supplier overpayment data (Standard 14=3 points) (Timeliness).

Passing Level:

93.7%–97.5% of overpayments entered into the Physician/Supplier Overpayment Report system within 10 calendar days of the date of determination=2.1 Points.

• Submit Part B Medicare (BMAD) files timely (Standard 15=8 points) (Timeliness).

Passing Level:

All BMAD files submitted on or before the required due dates with one requiring resubmittal *and* the resubmittal returned within 21 calendar days and accepted=5.6 Points.

• Submit Carrier Appeals Report (HCFA–2590) timely (Standard 16=4 points) (Timeliness).

Passing Level:

Report(s) submitted with a cumulative total of less than 4 calendar days late=2.8 Points.

9. Fraud and Abuse Criterion (Total Points=70)

A carrier must administer the program in a manner that achieves maximum savings and cost avoidance for the Medicare trust funds. The carrier is required to meet the following:

• Detect fraud and abuse situations (Standard 1=25 points) (Quality).

Passing Level:

Demonstrates basic compliance with minor improvements needed=17.5 Points.

• Develop potential fraud cases (Standard 2=15 points) (Quality).

Passing Level:

9–10 Sample Cases Reviewed, 3 in error=10.5 Points.
7–8 Sample Cases Reviewed, 3 in error=10.5 Points.
4–6 Sample Cases Reviewed, 1 in error=10.5 Points.
2–3 Sample Cases Reviewed, 1 in error=10.5 Points.
1 Sample Case Reviewed, 0 in error=15.0 Points.

• Develop potential abuse cases (Standard 3=10 points) (Quality).

Passing Level:

9–10 Sample Cases Reviewed, 3 in error=7.0 Points.
7–8 Sample Cases Reviewed, 3 in error=7.0 Points.
4–6 Sample Cases Reviewed, 1 in error=7.0 Points.
2–3 Sample Cases Reviewed, 1 in error=7.0 Points.
1 Sample Case Reviewed, 0 in error=10.0 Points.

• Ensure that no payments are made to excluded physicians/suppliers (Standard 4=10 points) (Quality).

Passing Level:

Contractor has made payment to two excluded physicians/suppliers=7.0 points

• Monitor participating physician agreement violations (Standard 5=5 points) (Quality).

Passing Level:

Complied with all but 1 requirement=3.5 points

• Monitor nonparticipating physician Maximum Allowable Actual Charge (MAAC) violations (Standard 6=5 points) (Quality).

Passing Level:

89.8%–95.0% of MAAC violations processed accurately=3.5 points

10. Management of Change Criterion (Total Points=95)

A carrier must take measures to protect the Medicare program and the public interest. It must effectively manage Federal funds for both program payments and cost of administration in accordance with HCFA instructions. The carrier is required to meet the following standards:

• Implement Priority I critical tasks accurately (Standard 1=25 points) (Quality).

Passing Level:

All tasks implemented with only 1 task requiring major changes corrected within the date negotiated with the RO and/or all tasks implemented accurately with no more than 7 tasks requiring minor RO-initiated changes=17.5 points

• Implement Priority I critical tasks timely (Standard 2=35 points) (Timeliness).

Passing Level:

Cumulative late days do not exceed 30=24.5 points

• Implement "other tasks" from the HCFA Contractor Task Management Plan accurately (Standard 3=10 points) (Quality).

Passing Level:

Four tasks implemented with minor errors or one task implemented with major errors—7.0 points

• Implement "other tasks" from the HCFA Contractor Task Management Plan timely (Standard 4=10 points) (Timeliness).

Passing Level:

Seven tasks implemented on or before due date=7.0 points

• Comply with regional office (RO) requests and instructions timely (Standard 5=15 points) (Timeliness).

Passing Level:

Two or more directives not implemented timely but the length of delay(s) did not adversely impact on the program initiative(s)=10.5 points

G. Contractor Replacement Methodology

The Omnibus Budget Reconciliation Act of 1989 (OBRA 89), Pub. L. 101–239, extended through FY 1993 the authority of Section 2326(a) of the Deficit Reduction Act of 1984 (DEFRA), Pub. L. 99–369, whereby each year up to two intermediaries and up to two carriers in the lowest 20th percentile of contractors

may be replaced for performance over a period of time OBRA 89 also redefined "over a period of time" to be "over a 2-year period time." Consequently, the methodology for separately identifying Part A and Part B contractors for potential replacement under section 2326(a) of DEFRA, as amended, will be as follows:

- Performance, as measured by the Secretary's criteria and standards, will be considered for the most recent 2 evaluation periods.
- Each evaluation period's overall performance will be captured in the form of an unweighted efficiency rating _____ points earned as a percentage of points available, as determined by the performance criteria and standards used during some or all of the fiscal year. For example, FY 1990 efficiency ratings will be calculated based upon the criteria and standards used for the June–September 1990 review period. In addition, efficiency ratings for the FY 1989 review period will be used.
- Each period's efficiency rating will be weighted to provide extra emphasis for the most recent performance.

The weights, to be multiplied by each period's efficiency rating, are:

Weight
Most Recent Period 3
Prior Period 2

- For each contractor, the weighted efficiency rating for each of the two periods will be summed and the contractors will be ranked (Part A and Part B separately) from highest points to lowest points).
- Careful study of the bottom 20th percentile of contractors will be undertaken to fully assess considerations such as performance that is improving/deteriorating, factors beyond the contractor's control, and other factors pertinent to a particular territory.

H. Response to Public Comments

Because of the large number of items of correspondence we normally receive on a proposed notice, we are unable to acknowledge or respond to them individually. However, we will consider all comments that we receive by the date and time specified in the "DATE" section of this preamble and if we proceed with a final notice, we will respond to the comments in the preamble of that notice.

I. Regulatory Impact Statement

Executive Order 12291

Executive Order 12291 (E.O. 12291) requires us to prepare and publish a regulatory impact analysis for any general notice that meets one of the E.O. criteria for a "major rule"; that is, that would be likely to result in—

- An annual effect on the economy of $100 million or more;
- A major increase in costs or prices for consumers, individual industries, Federal, State, or local government agencies, or geographic regions; or
- Significant adverse effects on competition, employment, investment, productivity, innovation, or on the ability of United States-based enterprises to compete with foreign-based enterprises in domestic or export markets.

Preliminary analyses reveal that the FY 1990 CPEP may reduce the Federal resources required to administer these criteria and standards as more efficient evaluation methodologies are being used. We expect minimal effects on the contractor costs due to this notice since the criteria and standards measure functional responsibilities that the contractor must be performing as a Medicare contractor.

This general notice does not meet the $100 million criterion nor do we believe that it meets the other E.O. 12291 criteria. Therefore, this general notice is not a major rule under E.O. 12291, and regulatory impact analysis is not required.

2. Regulatory Flexibility Act

We generally prepare a regulatory flexibility analysis that is consistent with the Regulatory Flexibility Act (RFA) (5 U.S.C. 601 through 612) unless the Secretary certifies that a proposed notice would not have a significant economic impact on a substantial number of small entities. For purposes of the RFA, intermediaries and carriers are not small entities. We treat all providers and suppliers as small entities.

In addition, section 1102(b) of the Act requires the Secretary to prepare a regulatory impact analysis if a proposed notice may have a significant impact on the operations of a substantial number of small rural hospitals. Such an analysis must conform to the provisions of section 604 of the RFA. For purposes of section 1102(b) of the Act, we define a small rural hospital as a hospital with fewer than 50 beds located outside of a Metropolitan Statistical Area.

This notice sets forth the criteria and standards to be used for evaluation of Medicare intermediaries and carriers which are not considered small entities. This notice does not require specific performance of the operations being evaluated. It may have an effect on contractor operations such as bill processing, beneficiary services and provider services which could indirectly affect a substantial number of providers and suppliers.

The most important indirect effect on providers and suppliers as a result of this notice will be to ensure that they are paid timely and accurately. We, therefore, do not believe these criteria and standards will have any negative effects on providers and suppliers.

As stated above, this notice primarily affects intermediaries and carriers, which are not considered small entities for purposes of the RFA. For these reasons, we have determined, and the Secretary certifies, that this general notice will not have a significant economic impact on a substantial number of rural hospitals. Therefore, we have not prepared analyses for either the RFA or small rural hospitals.

Authority: (Sec. 1102, 1816, 1842, and 1871 of the Social Security Act (42 U.S.C. 1302, 1395h, 1395u, and 1395hh)).

(Catalog of Federal Domestic Assistance Program No. 13.773, Medicare-Hospital Insurance and Program No. 13.774, Medicare Supplementary Medical Insurance.)

Dated: April 6, 1990.

Gail R. Wilensky,

Administrator, Health Care Financing Administration.

[FR Doc. 90–10153 Filed 5–1–90; 8:45 am]

BILLING CODE 4120–01–17

Office of Human Development Services

President's Committee on Mental Retardation; Meeting

Agency Holding the Meeting: President's Committee on Mental Retardation.

Time and Date: Executive Committee, Sunday, June 10, 1990, 2 p.m.—5 p.m., Full Committee, June 11–12, 1990, 8:30 a.m.—4:30 p.m.

Place: Crystal City Marriott Hotel, 1999 Jefferson Davis Highway, Arlington, Virginia 22202.

Status: Meetings are open to the public. An interpreter for the deaf will be available upon advance request. All locations are barrier free.

Matters To Be Considered: Reports by members of the Executive Committee of the President's Committee on Mental Retardation (PCMR) will be given. The Committee plans to discuss critical issues concerning prevention, family and community services, full citizenship, public awareness and other issues relevant to the PCMR's goals.

The PCMR: (1) Acts in an advisory capacity to the President and the Secretary of the Department of Health and Human Services on matters relating

to programs and services for persons who are mentally retarded; and (2) is responsible for evaluating the adequacy of current practices in programs for the retarded, and reviewing legislative proposals that affect the mentally retarded.

Contact Person for More Information: Sambhu N. Banik, Ph.D., 330 Independence Avenue, SW., room 4262—Wilbur J. Cohen Building, Washington, DC 20201–0001, (202) 245–7634.

Dated: April 26, 1990.

Sambhu N. Banik,

Executive Director, PCMR.

[FR Doc. 90–10167 Filed 5–1–90; 8:45 am]

BILLING CODE 4130–01–M

Public Health Service

Omnibus Budget Reconciliation Act of 1989; Delegation of Authority

Notice is hereby give that in furtherance of the delegation of authority of March 26, 1990, from the Secretary of Health and Human Services to the Assistant Secretary of Health, I have delegated to the Administrator, Agency for Health Care Policy and Research the following authorities:

1. Title IX of the Public Health Service Act, "Agency for Health Care Policy and Research" (42 USC 299 et seq.), as amended hereafter. (section 6103(a) and (c) of Pub. L. 101–239.)

2. Section 1142 of title XI of the Social Security Act, "Research on Outcomes of Health Care Services and Procedures," (42 U.S.C. 1320b–12), as amended hereafter. (section 6102(b) of Pub. L. 101–239).

3. Section 6103(d)(2) of Pub. L. 101–239, "Contract for Temporary Assistance to Secretary with Respect to Health Care Technology Assessment," as amended hereafter.

Redelegation and Restrictions

These authorities may be redelegated. The delegation excluded the authority to promulgate regulations, to submit reports to Congress, to establish advisory committees or national commissions, and to appoint members to such committees or commissions.

Effective Date

This delegation became effective upon the date of signature. In addition, I have affirmed and ratified any actions taken by the Administrator for Health Care Policy and Research or his subordinates which, in effect, involved the exercise of the authorities delegated herein prior to the effective date of the delegation.

James O. Mason,

Assistant Secretary for Health.

[FR Doc. 90–10122 Filed 5–1–90; 8:45 am]

BILLING CODE 4160–17–M

DEPARTMENT OF THE INTERIOR

Fish and Wildlife Service

Receipt of Applications for Permits

The following applicants have applied for permits to conduct certain activities with endangered species. This notice is provided pursuant to section 10(c) of the Endangered Species Act of 1973, as amended (16 U.S.C. 1531, *et seq.*):

PRT 747933

Applicant: Jerry Charles Walderat, Danbury, WI

The applicant requests a permit to purchase in interstate commerce a pair of captive-born grey wolf (*Canis lupus*) cubs from Twito Wolf Farm, Gully, Minnesota for the purpose of enhancement of propagation and survival of the species.

PRT 748450

Applicant: Charles E. Stock, Halsey, OR

The applicant requests a permit to take (capture, band and release peregrine falcons (*Falco peregrinus*) in primarily the Willamette Valley, Oregon for the purpose of enhancement of propagation and survival of the species.

PRT 748154

Applicant: Robert C. Fleischer, University of North Dakota, Grand Forks, ND

The applicant requests a permit to import up to 80 blood samples taken from captive-held Hawaiian (=nene) geese [*Nesochen* (=*Branta*) *sandvicensis*] from the Wildfowl Trust, Slimbridge, England for the purpose of scientific research.

PRT 748114

Applicant: Cincinnati Zoo, Cincinnati, OH

The applicant requests a permit to import two male and two female captive-born Pakistan sand cats (*Felis magarita scheffeli*) from Tel Aviv University, Ramat Aviv, Israel, for zoological display and captive propagation.

PRT 748245

Applicant: California Department of Transportation, Fresno, CA

The applicant requests a permit to live-trap and release species within the genus *Dipodomys* for verification of the species' presence prior to initiating the Department's projects in District 6 of the State of California.

PRT 748109

Applicant: Chambers Group, Inc., Santa Ana, California

The applicant requests a permit to conduct tortoise density surveys to determine the distribution and relative abundance of the desert tortoise (*Gopherus agassizii*) in 460 square miles of land owned by the Bureau of Land Management which may be acquired by the Fort Irwin National Training Center in San Bernardino County, California. Desert tortoises found during the survey will be examined to assess their respiratory health.

Documents and other information submitted with these applications are available to the public during normal business hours (7:45 am to 4:15 pm) in room 430, 4401 N. Fairfax Dr., Arlington, VA 22201, or by writing to the Director, U.S. Fish and Wildlife Service, Office of Management Authority, 4401 N. Fairfax Drive, room 430, Arlington, VA 22201.

Interested persons may comment on any of these applications within 30 days of the date of this publication by submitting written views, arguments, or date to the Director at the above address. Please refer to the appropriate PRT number when submitting comments.

Dated: April 27, 1990.

Karen Willson,

Acting Chief, Branch of Permits, U.S. Office of Management Authority.

[FR Doc. 89–1D156 Filed 5–1–90; 8:45 am]

BILLING CODE 4310–55–M

Bureau of Land Management

[AA–660–00–4120–02]

Federal Coal and Other Solid Mineral Leases; Clarification to Notice of Final Action

AGENCY: Bureau of Land Management, Interior.

ACTION: Notice of final action, clarification.

SUMMARY: This notice is issued for the purpose of clarifying various issues related to category 5 of the Bureau of Land Management's (BLM) procedural document entitled "Royalty Rate Reduction Guidelines for Solid Leasable Minerals." The guidelines implement section 39 of the Mineral Leasing Act (MLA) and were promulgated on June 30, 1987 (52 FR 24347). Category 5 was added to the guidelines on February 27, 1990 (55 FR 6841), as a means by which an applicant may seek a royalty

reduction where Federal coal reserves could be bypassed or remain undeveloped due to a differential between Federal and non-Federal coal royalty rates in a State or geographic area. The revised guidelines which included category 5 were to become effective on March 29, 1990. However, the effective date was extended to April 30, 1990 (55 FR 12059, March 30, 1990).

EFFECTIVE DATE: April 30, 1990.

ADDRESSES: Suggestions or inquires may be sent to Director (660), Bureau of Land Management, 1849 C Street NW., Washington, DC 20240, (202) 208–7722.

FOR FURTHER INFORMATION CONTACT: Paul W. Politzer or Phillip C. Perlewitz, Bureau of Land Management, 849 C Street NW., Washington, DC 20240, (202) 208–7722.

SUPPLEMENTARY INFORMATION: This Notice is published to clarify the following issues: The delegation to the appropriate BLM State Director of the Secretary's authority to grant temporary royalty rate relief under section 39 of the MLA, the discretionary nature of this authority, and the use of that discretion by the BLM State Director. Also clarified is the requirement that all five of the category 5 criteria for State or geographic area qualification must be met in determining whether a State or geographic area qualifies. Following State or area qualification, individual lease-specific applications may be submitted under this category to the appropriate BLM State Office. Further, the right of appeal, by any affected party, of a State or area qualification decision made under category 5 is addressed. Finally, the effective date of a royalty rate reduction approved under category 5 as well as the right of appeal of lease-specific application decisions are clarified.

I. Delegation of Authority and Discretionary Authority

Section 39 states in part: "The Secretary of the Interior, for the purpose of encouraging the gratest ultimate recovery of coal, oil, gas, oil shale, phosphate, sodium, potassium and sulfur, and in the interest of conservation of natural resources, is authorized to * * * reduce the royalty * * *, whenever in his judgment it is necessary to do so, in order to promote development, or whenever, in his judgment the leases cannot be successfully operated under the terms therein."

Secretarial Order No. 3087, published in the **Federal Register** on March 2, 1983 (48 FR 8982), transferred the authority of the Minerals Management Service (MMS) for onshore leasable mineral operations to BLM. That authority includes responsibility for approval or rejection of an application filed for a royalty rate reduction. The BLM Manual Section 1203—Delegation of Authority delegates to the BLM State Directors the authority to act for the Secretary on royalty rate reduction requests. Further, the Interior Board of Land Appeals (IBLA) has held that the authority conferred by section 39 of the MLA is discretionary and, thus, enables *the BLM* (emphasis added) to exercise professional judgment to make decisions which best protect the economic and resource interest of the United States as owner of the mineral estate (Peabody Coal Company, 93 IBLA 317, 326, 328, and 334 (1986)).

In addressing the discretionary authority established by section 39 of the MLA (30 U.S.C. 209 (1982)), the IBLA stated that "The provisions of 30 U.S.C. 209 (1982) specify no circumstances in which BLM is *required* (emphasis added) to reduce the royalty of a coal lease. Under that statute, no *entitlement* (emphasis added) to a reduction can ever arise. BLM remains free to accept the economic consequences of denying a reduction. The discretionary authority conferred by section 209 enables BLM to exercise prudent business judgment to select the alternative which best protects the economic interest of the United States as owner of the mineral resource (Peabody Coal Company, 93 IBLA at 326 (1986))."

II. Guideline Clarifications

In 1987, BLM conducted a study which focused on the competitive nature of Federal coal reserves located in certain geographic areas in response to public, congressional, and State requests. The study examined Federal coal reserves in three States (North Dakota, Alabama, and Oklahoma) where Federal coal production has represented a minor share of total coal production. Differences in royalty rates between Federal and non-Federal coal in North Dakota, Alabama, and Oklahoma were reported in the study. Federal royalty rates are higher thus causing a disincentive to mine coal on Federal lands.

New royalty rate reduction criteria, that would reduce the economic incentive to bypass Federal coal reserves due to the royalty rate differentials on Federal and non-Federal coal, were developed to make Federal coal resources competitive with surrounding State and private coal. Therefore, in order to promote development of Federal coal reserves that may be bypassed in favor of non-Federal coal having a lower royalty rate, in conjunction with the discretionary authority established in section 39 of the MLA to reduce royalties, BLM developed a new royalty rate reduction category.

The new category is based in part on a study entitled "The Competitive Position of Federal Coal in North Dakota, Alabama, and Oklahoma." The Notice of final action published in the **Federal Register** on February 27, 1990 (55 FR 6841) is amended to read: "The following five criteria must all be met before a determination is to be made on whether a State or geographic area would qualify under category 5 for royalty rate differentials. In addition, under the fifth criterion of category 5, an assessment will be made of the potential for a reduction under this category to cause an adverse impact on Indian leases (i.e., tribal or alloted lands)."

For those States or areas that qualify, a competitive royalty rate will be established by the BLM State Director for each qualified State or area. The competitive royalty rate will be based on royalty rates from producing non-Federal coal leases within the specific State or area and be used for the sole purpose of processing royalty rate reduction applications under category 5. The rate established by the BLM State Director will be published in the **Federal Register**. This published rate does not affect the "bonus royalty" bid received in a competitive coal lease sale. Also, the competitive royalty rate established under category 5 shall conform to the general requirement established in the guidelines implemented on June 27, 1987, and shall not be less than 2 percent, the minimum production royalty allowable under a royalty rate reduction.

The "bonus" royalty bid received in a competitive coal lease sale, i.e. that portion of a royalty bid which is above the statutory or regulatory minimum royalty rate, is considered a component of fair market value which the Secretary is required to obtain by statute, 30 U.S.C. 201(a)(1) (1982). There is no authority for reduction of that "bonus" royalty just as there is no authority for refund of a cash bonus. Any reduction of the bonus royalty portion of the overall lease production royalty rate could diminish the Department's receipt of fair market value determined as a statutory condition of lease issuance. Section 39 cannot be used to undermine the royalty bidding procedure formerly used to award certain coal leases (Peabody Coal Company, 93 IBLA at 332 and 335).

The competitive royalty rate established by the BLM State Director will be published after the final decision on State or area qualification. An

individual, lease-specific royalty reduction application could then be submitted under this category within a State or area that is determined to be qualified. As stated in the Notice of final action published in the **Federal Register** (55 FR 6841) on February 27, 1990, application procedures are similar to those established in the present guidelines. However, for this new category the applicant must certify that its circumstances conform to criteria 2 and 3 of the State or geographic area (category 5) qualification requirements. The royalty rate contained in each BLM State Director's decision for individually approved royalty rate reductions under category 5 may not be less than the sum of the "bonus royalty", if any, plus the established competitive royalty rate. This provision only applies to leases issued or readjusted pursuant to the Federal Coal Leasing Amendments Act. The addition of category 5 in no way alters the availability of the other four categories under which an individual, lease-specific application may be submitted to the BLM.

The effective date for royalty rate reductions approved under category 5 as stated in the notice of final action published in the **Federal Register** on February 27, 1990 (55 FR 6841) is hereby amended to read: "If approved, the royalty rate reduction for individual leases shall take effect at the start of the first royalty reporting period following receipt by the BLM State Office of a complete application in compliance with the regulations at 43 CFR part 3485 as established by the Royalty Rate Reduction Guidelines for the Solid Leasable Minerals." The Royalty Rate Reduction Guidelines for the Solid Leasable Minerals are hereby clarified with respect to the date of submission of a request for recertification of an approved reduction under category 5. Requests for recertification shall be submitted no later than 120 days prior to the second anniversary of the effective date of an existing reduction, and every 2 years thereafter so long as the royalty rate reduction is in effect. Also, the February 27, 1990 notice of final action is hereby amended to read: "For approved royalty rate reductions under category 5, the lessee is required to submit a request for recertification no later than 180 days prior to the second anniversary of the effective date of an existing reduction, and every 2 years thereafter so long as the royalty rate reduction is in effect."

The BLM State Director, after concurrence from the BLM Director, shall consult with the appropriate State Governor and then issue a final decision on the State or area qualification. The same steps shall be followed in reviewing each individual, lease-specific application for a royalty reduction within a State or area that has been determined to qualify under category 5.

Decisions on State or area qualification and on individual royalty rate reduction applications may be appealed to the Board of Land Appeals, Office of Hearings and Appeals in accordance with 43 CFR part 4.

Dated: April 27, 1990.

James M. Hughes,

Acting Assistance Secretary—Land and Minerals Management.

[FR Doc. 90-10291 Filed 4-30-90; 11:36 am]

BILLING CODE 4310-84-M

Intent To Amend the Coast/Valley Resource Management Plan; Caliente Resource Area, Bakersfield District, CA

AGENCY: Bureau of Land Management, Interior.

ACTION: Notice of intent.

SUMMARY: Pursuant to 43 CFR 1610.2(c), notice is hereby given that the Caliente Resource Area, Bakersfield District, California, will prepare an amendment to the Coast/Valley Resource Management Plan (RMP). The amendment is necessary to modify minimum residual mulch levels, seasons of use and management direction for livestock grazing systems on three grazing allotments administered by the Bureau of Land Management within the Temblor-Caliente/Valley Management Area in San Luis Obispo County. Comments and recommendations on issues to be addressed will be received for a thirty (30) day period from May 25, 1990.

SUPPLEMENTARY INFORMATION: The RMP was approved in 1985 and covers 236,000 surface acres administered by the Bureau of Land Management in Kern, Kings, Santa Barbara, San Luis Obispo, Tulare and Ventura Counties. The RMP and the South Sierra Foothills Management Framework Plan (MFP), which covers the eastern third of the Caliente Resource Area, will be replaced by the Caliente RMP which is in the early stages of development (see 3/23/89 FR, P. 12023 for NOI).

The amendment will provide a basis for certain minor changes in minimum residual mulch levels and seasons of use. These changes, based on monitoring and evaluation, are needed for the development of an Allotment Management Plan (AMP) implementing a deferred rotation grazing system on the Sulphur Canyon, Selby Ranch and Chimineas Ranch grazing allotments. The deferred rotation system will be implemented to improve vegetation and watershed conditions and to foster restoration and enhancement of endangered species habitat. The management plan modifications will be incorporated in the Caliente RMP which is expected to be approved in 1992, about a year and a half after this amendment is approved. No issues other than the proposed changes in mulch levels and seasons of use on the three grazing allotments are anticipated.

The environmental document for this amendment will be an Environmental Assessment which will reference the Environmental Impact Statement (EIS) for the Coast/Valley RMP. Copies of the Environmental Assessment, an explanitory letter, and the proposed amendment will be available to interested agencies, organizations and individuals in August 1990. Following a 30-day review period, the District Manager will sign a Finding of No Significant Impact (if appropriate) and give the public notice of the amendment. Following review by the governor, it is anticipated the amendment will be signed by the BLM State Director in November 1990.

Disciplines represented on the interdisciplinary team that produced the environmental document which will be referenced include planning, wildlife, archaeology, range, lands and minerals. Numerous organizations and agencies were also consulted. Planning, range, wildlife and botany are represented on the team preparing the amendment.

FOR FURTHER INFORMATION CONTACT: Glenn Carpenter, Area Manager, Bureau of Land Management, Caliente Resource Area, 4301 Rosedale Highway, Bakersfield, CA 93308; (805) 861-4236. Documents relevant to this planning effort are available for public review at the same address.

Dated: April 20, 1990.

Robert D. Rheiner, Jr.,

District Manager.

[FR Doc. 90-10164 Filed 5-1-90; 8:45 am]

BILLING CODE 4310-40-M

[[ES-940-00-4730-12], (ES-042143, Group 185)

Florida; Filing of Plat of Dependent Resurvey and Survey

April 23, 1990.

1. The plat of the dependent resurvey of the south boundary and survey of the Southern Works of Levee L-4 and the Western Works of Levee L-28 within

Township 48 South, Range 35 East, Tallahassee Meridian, Florida, will be officially filed in the Eastern States Office, Alexandria, Virginia at 7:30 a.m., on June 7, 1990.

2. The dependent resurvey and survey was made at the request of the Bureau of Indian Affairs.

3. All inquiries or protests concerning the technical aspects of the dependent resurvey and survey must be sent to the Deputy State Director for Cadastral Survey, Eastern States Office, Bureau of Land Management, 350 South Pickett Street, Alexandria, Virginia 22304, prior to 7:30 a.m., June 7, 1990.

4. Copies of the plat will be made available upon request and prepayment of the reproduction fee of $4.00 per copy.

Stephen G. Kopach,

Deputy State Director for Cadastral Survey.

[FR Doc. 90-10117 Filed 5-1-90; 8:45 am]

BILLING CODE 4310-GJ-M

[[ES-940-00-4730-12], (ES-042145, Group 187)]

Florida; Filing of Plat of Dependent Resurvey and Survey

April 23, 1990.

1. The plat of the dependent resurvey of a portion of the subdivisional lines and the dependent resurvey and survey of a portion of the subdivision of section 9, Township 40 South, Range 32 East, Tallahassee Meridian, Florida, will be officially filed in the Eastern States Office, Alexandria, Virginia at 7:30 a.m., on June 7, 1990.

2. The dependent resurvey and survey was made at the request of the Bureau of Indian Affairs.

3. All inquiries or protests concerning the technical aspects of the dependent resurvey and survey must be sent to the Deputy State Director for Cadastral Survey, Eastern States Office, Bureau of Land Management, 350 South Pickett Street, Alexandria, Virginia 22304, prior to 7:30 a.m., June 7, 1990.

4. Copies of the plat will be made available upon request and prepayment of the reproduction fee of $4.00 per copy.

Stephen G. Kopach,

Deputy State Director for Cadastral Survey.

[FR Doc. 90-10118 Filed 5-1-90; 8:45 am]

BILLING CODE 4310-GJ-M

[[ES-940-00-4730-12], (ES-042144, Group 185)]

Florida; Filing of Plat of Dependent Resurvey

April 23, 1990.

1. The plat of the dependent resurvey of the west 2 miles of the south boundary of Township 48 South, Range 36 East, Tallahassee Meridian, Florida, will be officially filed in the Eastern States Office, Alexandria, Virginia at 7:30 a.m., on June 7, 1990.

2. The dependent resurvey was made at the request of the Bureau of Indian Affairs.

3. All inquiries or protests concerning the technical aspects of the dependent resurvey must be sent to the Deputy State Director for Cadastral Survey, Eastern States Office, Bureau of Land Management, 350 South Pickett Street, Alexandria, Virginia 22304, prior to 7:30 a.m., June 7, 1990.

4. Copies of the plat will be made available upon request and prepayment of the reproduction fee of $4.00 per copy.

Stephen G. Kopach,

Deputy State Director for Cadastral Survey.

[FR Doc. 90-10119 Filed 5-1-90; 8:45 am]

BILLING CODE 4310-GJ-M

Bureau of Reclamation

Central Valley Project, California

AGENCY: Bureau of Reclamation, Interior.

ACTION: Public comment period reopened for the "Report on Cost Allocation Study, Central Valley Project, California," dated December 1988.

SUMMARY: Notice is hereby given that the public comment period for the "Report on Cost Allocation Study, Central Valley Project, California," dated December 1988, is reopened and extended to May 31, 1990.

The comment period announced in the **Federal Register** on January 24, 1990 (55 FR 2419) ended on March 30, 1990. In response to requests from interested parties, the comment period is reopened and extended to May 31, 1990.

No additional public information workshops will be held to explain the cost allocation study.

Written comments on the 1988 Cost Allocation study for the Central Valley Project (CVP) submitted after January 24, 1990, and on or before May 31, 1990, will be considered. A "Public Review Comment and Response Summary" document will be prepared before the cost allocation study is forwarded to the Commissioner of Reclamation for final approval. The effective date for the implementation of the approved study will be 30 calendar days after the Notice of Final Decision is published in the **Federal Register.**

DATES: The public comment period for the "Report on Cost Allocation Study, Central Valley Project, California," date December 1988, began on January 24, 1990.

The public comment period will end on May 31, 1990. Written comments must be received on or before May 31, 1990.

ADDRESSES: Copies of the "Report on Cost Allocation Study, Central Valley Project, California", dated December 1988, are available from the: Regional Director, Bureau of Reclamation, Mid-Pacific Region, CVP Cost Allocation (MP-350), 2800 Cottage Way, Sacramento, CA 95825-1898.

Written comments on the 1988 CVP cost allocation may be mailed to the: Regional Director, Bureau of Reclamation, Mid-Pacific Region, CVP Cost Allocation (MP-350), 2800 Cottage Way, Sacramento, CA 95825-1898.

FOR FURTHER INFORMATION CONTACT: All written requests or comments should be sent to the: Regional Director, Bureau of Reclamation, Mid-Pacific Region, CVP Cost Allocation (MP-350), 2800 Cottage Way, Sacramento, CA 95825-1898.

Telephone inquiries may be made to Michael Levering at 916-978-5255 or FTS-460-5255 in Sacramento, California; Sam Kennedy at 303-236-8388 or FTS-776-8388 in Denver, Colorado; or Donald Walker at 202-208-5671 or FTS-268-5671 in Washington, DC.

SUPPLEMENTARY INFORMATION:

Authority: Section 9, Reclamation Project Act of 1939, 53 Stat. 1193 (43 U.S.C. 485h(a)); sec. 102, Pub. L. 99-546, 100 Stat. 3050.

Effects of Decision To Implement

Approval of the 1988 cost allocation study will (1) increase the share of the costs which are to be repaid by the water users and (2) reduce the share of the costs distributed to nonreimbursable purposes. There will be an increase in the cost of water supplied by the project.

Water and Power Supplies

CVP water is delivered under terms of long-term water service contracts. Project water is supplied for irrigation; domestic, municipal, and industrial uses; waterfowl conservation; and wildlife refuges. Hydroelectric power is generated by the project to meet project pumping requirements. Any surplus power is sold to the preference power customers to aid in the recovery of costs of the project.

Service Area

The authorized service area includes portions of the Central Valley Basin and part of the central coastal area of California.

Dated: April 26, 1990.

D.W. Webber,

Assistant Commissioner, Engineering and Research.

[FR Doc. 90–10173 Filed 5–1–90; 8:45 am]

BILLING CODE 4310–09–M

INTERSTATE COMMERCE COMMISSION

Release of Waybill Data for Use By Ron Norman; Thesis in Economics at M.I.T.

The Commission has received a request from Ron Norman (a student at M.I.T.) for permission to use certain data from the Commission's 1982–1988 ICC Waybill Sample in a thesis that includes a comparision of changes in railroad productivity for various carriers.

The requested data are total revenue and total ton-miles aggregated by carrier, ICC car type, three groupings of number of cars,[1] three groupings of net tonnage,[2] and three milage blocks.[3] The aggregating will be done by the ICC.

The Commission requires rail carriers to file waybill sample information if in any of the past three years they terminated on their lines; (1) 4,500 revenue carloads or (2) 5 percent of revenue carloads in any one State (49 CFR part 1244). From the waybill information, the Commission has developed a Public Use Waybill File that has satisfied the majority of all our waybill data request while protecting the confidentiality of proprietary data submitted by the railroads. However, if confidentiall waybill data are requested, as in this case, we will consider releasing the data only after certain protective conditions are met and public notice is given. More specifically, under the Commission's current policy for handling waybill requests, we will not release any confidential waybill data until after: (1) Public notice is provided so affected parties have an opportunity to object and (2) certain requirements designed to protect the data's confidentiality are agreed to by the requesting party (Ex Parte No. 385(Sub–No. 2), 52 FR 12415, April 16, 1987).

Accordingly, if any parties object to this request, they should file their objections (an original and 2 copies) with the Director of the Commission's Office of Transportation Analysis (OTA) within 14 calendar days of the Publication of this notice. They should also include all grounds for objections to the full or partial disclosure of the requested data. The Director of OTA will consider these objections in determining whether to release the requested waybill data. Any parties who objected will be timely notified of the Director's decision.

Contact: James A. Nash; (202) 275–6864.

Noreta R. McGee,

Secretary.

[FR Doc. 90–10201 Filed 5–1–90; 8:45 am]

BILLING CODE 7035–01–M

[1] Number of carload groupings are: 1–5 carloads, 6–49 carloads, and over 49 carloads.

[2] Tonnage groupings are: 1–25 tons, 26–70 tons, and over 70 tons per car.

[3] Mileage blocks are: 1–499, 500–599, and over 599 miles.

[Finance Docket No. 31649]

Burlington Northern Railroad Co. Trackage Rights Exemption, CSX Transportation, Inc.

CSX Transportation, Inc. (CSXT), has agreed to grant overhead trackage rights to Burlington Northern Railroad Company (BN), between Linden (milepost LRS770.3) and Myrtlewood (milepost LRS779.7) in Marengo County, AL, a distance of 9.4 miles. the trackage rights were to become effective on April 18, 1990.

This notice is filed under 49 CFR 1180.2(d)(7). Petitions to revoke the exemption under 49 U.S.C. 10505(d) may be filed at any time. The filing of a petition to revoke will not stay the transaction. Pleadings must be filed with the Commission and served on: Ethel A. Allen, Burlington Northern Railroad Company, 3800 Continental Plaza, 777 Main Street, Fort Worth, TX 76102.

As a condition to the use of this exemption, any employees affected by the trackage rights will be protected pursuant to *Norfolk and Wesern Ry. Co.—Trackage Rights—BN*, 354 I.C.C. 605 (1978), as modified in *Mendocino Coast Ry., Inc.—Lease and Operate*, 360 I.C.C. 653 (1980).

Dated: April 25, 1990.

By the Commission, Jane F. Mackall, Director, Office of Proceedings.

Noreta R. McGee,

Secretary.

[FR Doc. 89–10202 Filed 5–1–89; 8:45 am]

BILLING CODE 7035–01–M

[Finance Docket No. 31648]

Mineral Wells & Eastern Railway Co., Lease and Operation Exemption; Mineral Wells, TX

The Minerals Wells & Eastern Railway Company (MWE), noncarrier, has filed a notice of exemption to lease and operate 21.36 miles of rail line owned by the city of Mineral Wells, TX, extending between milepost, 1.54, at Weatherford, TX, and milepost 22.80, at Mineral Wells.

Any comments must be filed with the Commission and served on: Frank J. Pergolizzi, Slover & Loftus, 1224 Seventeenth Street, N.W., Washington, DC 20036.

This notice is filed under 49 CFR 1150.31. If the notice contains false or misleading information, the exemption is void ab initio. Petitions to revoke the exemption under 49 U.S.C. 10505(d) may be filed at any time. The filing of a petition to revoke will not automatically stay the transaction.

Decided: April 25, 1990.

By the Commission, Jane F. Mackall, Director, Office of Proceedings.

Noreta R. McGee,

Secretary.

[FR Doc. 90–10091 Filed 5–1–90; 8:45 am]

BILLING CODE 7035–01–M

NUCLEAR REGULATORY COMMISSION

Biweekly Notice Applications and Amendments to Operating Licenses Involving No Significant Hazards Considerations

I. Background

Pursuant to Public Law (P.L.) 97-415, the Nuclear Regulatory Commission (the Commission) is publishing this regular biweekly notice. P.L. 97-415 revised section 189 of the Atomic Energy Act of 1954, as amended (the Act), to require the Commission to publish notice of any amendments issued, or proposed to be issued, under a new provision of section 189 of the Act. This provision grants the Commission the authority to issue and make immediately effective any amendment to an operating license upon a determination by the Commission that such amendment involves no significant hazards consideration, notwithstanding the pendency before the Commission of a request for a hearing from any person.

This biweekly notice includes all notices of amendments issued, or proposed to be issued from April 9, 1990, through April 20, 1990. The last biweekly notice was published on April 18, 1990 (55 FR 14500).

NOTICE OF CONSIDERATION OF ISSUANCE OF AMENDMENT TO FACILITY OPERATING LICENSE AND PROPOSED NO SIGNIFICANT HAZARDS CONSIDERATION DETERMINATION AND OPPORTUNITY FOR HEARING

The Commission has made a proposed determination that the following amendment requests involve no significant hazards consideration. Under the Commission's regulations in 10 CFR 50.92, this means that operation of the facility in accordance with the proposed amendments would not (1) Involve a significant increase in the probability or consequences of an accident previously evaluated; or (2) Create the possibility of a new or different kind of accident from any accident previously evaluated; or (3) Involve a significant reduction in a margin of safety. The basis for this proposed determination for each amendment request is shown below.

The Commission is seeking public comments on this proposed determination. Any comments received within 30 days after the date of publication of this notice will be considered in making any final determination. The Commission will not normally make a final determination unless it receives a request for a hearing.

Written comments may be submitted by mail to the Regulatory Publications Branch, Division of Freedom of Information and Publications Services, Office of Administration, U.S. Nuclear Regulatory Commission, Washington, DC 20555, and should cite the publication date and page number of this **Federal Register** notice. Written comments may also be delivered to Room P-223, Phillips Building, 7920 Norfolk Avenue, Bethesda, Maryland from 7:30 a.m. to 4:15 p.m. Copies of written comments received may be examined at the NRC Public Document Room, the Gelman Building, 2120 L Street, NW., Washington, DC. The filing of requests for hearing and petitions for leave to intervene is discussed below.

By June 1, 1990, the licensee may file a request for a hearing with respect to issuance of the amendment to the subject facility operating license and any person whose interest may be affected by this proceeding and who wishes to participate as a party in the proceeding must file a written petition for leave to intervene. Requests for a hearing and petitions for leave to intervene shall be filed in accordance with the Commission's "Rules of Practice for Domestic Licensing Proceedings" in 10 CFR Part 2. Interested persons should consult a current copy of 10 CFR 2.714 which is available at the Commission's Public Document Room, the Gelman Building, 2120 L Street, NW., Washington, DC 20555 and at the Local Public Document Room for the particular facility involved. If a request for a hearing or petition for leave to intervene is filed by the above date, the Commission or an Atomic Safety and Licensing Board, designated by the Commission or by the Chairman of the Atomic Safety and Licensing Board Panel, will rule on the request and/or petition and the Secretary or the designated Atomic Safety and Licensing Board will issue a notice of hearing or an appropriate order.

As required by 10 CFR 2.714, a petition for leave to intervene shall set forth with particularity the interest of the petitioner in the proceeding, and how that interest may be affected by the results of the proceeding. The petition should specifically explain the reasons why intervention should be permitted with particular reference to the following factors: (1) the nature of the petitioner's right under the Act to be made a party to the proceeding; (2) the nature and extent of the petitioner's property, financial, or other interest in the proceeding; and (3) the possible effect of any order which may be entered in the proceeding on the petitioner's interest. The petition should also identify the specific aspect(s) of the subject matter of the proceeding as to which petitioner wishes to intervene. Any person who has filed a petition for leave to intervene or who has been admitted as a party may amend the petition without requesting leave of the Board up to fifteen (15) days prior to the first prehearing conference scheduled in the proceeding, but such an amended petition must satisfy the specificity requirements described above.

Not later than fifteen (15) days prior to the first prehearing conference scheduled in the proceeding, a petitioner shall file a supplement to the petition to intervene which must include a list of the contentions which are sought to be litigated in the matter. Each contention must consist of a specific statement of the issue of law or fact to be raised or controverted. In addition, the petitioner shall provide a brief explanation of the bases of the contention and a concise statement of the alleged facts or expert opinion which support the contention and on which the petitioner intends to rely in proving the contention at the hearing. The petitioner must also provide references to those specific sources and documents of which the petitioner is aware and on which the petitioner intends to rely to establish those facts or expert opinion. Petitioner must provide sufficient information to show that a genuine dispute exists with the applicant on a material issue of law or fact. Contentions shall be limited to matters within the scope of the amendments under consideration. The contention must be one which, if proven, would entitle the petitioner to relief. A petitioner who fails to file such a supplement which satisfies these requirements with respect to at least one contention will not be permitted to participate as a party.

Those permitted to intervene become parties to the proceeding, subject to any limitations in the order granting leave to intervene, and have the opportunity to participate fully in the conduct of the hearing, including the opportunity to present evidence and cross-examine witnesses.

If a hearing is requested, the Commission will make a final determination on the issue of no significant hazards consideration. The final determination will serve to decide when the hearing is held.

If the final determination is that the amendment request involves no significant hazards consideration, the Commission may issue the amendment and make it immediately effective, notwithstanding the request for a hearing. Any hearing held would take place after issuance of the amendment.

If the final determination is that the amendment involves a significant hazards consideration, any hearing held would take place before the issuance of any amendment.

Normally, the Commission will not issue the amendment until the expiration of the 30-day notice period. However, should circumstances change during the notice period such that failure to act in a timely way would result, for example, in derating or shutdown of the facility, the Commission may issue the license amendment before the expiration of the 30-day notice period, provided that its final determination is that the amendment involves no significant hazards consideration. The final determination will consider all public and State comments received before action is taken. Should the Commission take this action, it will publish a notice of issuance and provide for opportunity for a hearing after issuance. The Commission expects that the need to take this action will occur very infrequently.

A request for a hearing or a petition for leave to intervene must be filed with the Secretary of the Commission, U.S. Nuclear Regulatory Commission,

Washington, DC 20555, Attention: Docketing and Services Branch, or may be delivered to the Commission's Public Document Room, the Gelman Building, 2120 L Street, NW., Washington, DC, by the above date. Where petitions are filed during the last ten (10) days of the notice period, it is requested that the petitioner promptly so inform the Commission by a toll-free telephone call to Western Union at 1-(800) 325-6000 (in Missouri 1-(800) 342-6700). The Western Union operator should be given Datagram Identification Number 3737 and the following message addressed to (*Project Director*): petitioner's name and telephone number; date petition was mailed; plant name; and publication date and page number of this Federal Register notice. A copy of the petition should also be sent to the Office of the General Counsel, U.S. Nuclear Regulatory Commission, Washington, DC 20555, and to the attorney for the licensee.

Nontimely filings of petitions for leave to intervene, amended petitions, supplemental petitions and/or requests for hearing will not be entertained absent a determination by the Commission, the presiding officer or the presiding Atomic Safety and Licensing Board, that the petition and/or request should be granted based upon a balancing of factors specified in 10 CFR 2.714(a)(1)(i)-(v) and 2.714(d).

For further details with respect to this action, see the application for amendment which is available for public inspection at the Commission's Public Document Room, the Gelman Building, 2120 L Street, NW., Washington, DC, and at the local public document room for the particular facility involved.

Arkansas Power & Light Company, Docket No. 50-313, Arkansas Nuclear One, Unit 1, Pope County, Arkansas

Date of amendment request: March 2, 1990

Description of amendment request: The proposed amendment would constitute several changes to Section 4.21 of the Arkansas Nuclear One, Unit 1 (ANO-1) Technical Specifications. Specifications 4.21.1 and 4.21.2 would be deleted and 4.21.3 would be renumbered to 4.21.1. All of the sprinkler systems previously covered by Specifications 4.21.1, 4.21.2, and 4.21.3 would be included in the new 4.21.1 specification. Requirements for surveillance testing of the Hallway EL 372 (Zone 98-J) Sprinkler System and the Condensate Demineralizer Area Sprinkler System would be added to Specification 4.21.1. The Bases would also be changed to reflect these new requirements. In addition, the amendment would revise the Bases to more accurately describe the emergency diesel generator room, diesel generator fuel vault, cable spreading room, and four cable penetration rooms as installed, and would also standardize the surveillance requirements for these systems.

Basis for proposed no significant hazards consideration determination: The Commission has provided standards for determining whether a significant hazards consideration exists as stated in 10 CFR 50.92(c). A proposed amendment to an operating license for a facility involves no significant hazards consideration if operation of the facility in accordance with the proposed amendment would not: (1) Involve a significant increase in the probability or consequences of an accident previously evaluated; or (2) Create the possibility of a new or different kind of accident from any accident previously evaluated; or (3) Involve a significant reduction in a margin of safety. The licensee provided an analysis that addressed the above three standards in the amendment application. The licensee stated that the changes do not involve a significant hazards consideration for the following reasons:

(1) The proposed changes would add requirements for additional surveillance of the specified fire protection sprinkler systems. Therefore, there is no increase in the probability or consequences of an accident previously analyzed.

(2) No new possibility for an accident is introduced by modifying the specifications for the surveillance testing of the sprinkler systems to increase the surveillance requirements. Therefore, the possibility of a new or different kind of accident from any previously evaluated is not created.

(3) The proposed change does not involve a significant reduction in the margin of safety; rather, it adds additional surveillances not presently required by the Technical Specifications.

The NRC staff has reviewed the licensee's no significant hazards consideration determination analysis and agrees with its conclusion. Therefore, the staff proposes to determine that the requested amendment involves no significant hazards consideration.

Local Public Document Room location: Tomlinson Library, Arkansas Tech University, Russellville, Arkansas 72801

Attorney for licensee: Nicholas S. Reynolds, Esq., Bishop, Cook, Purcell, & Reynolds, 1400 L Street, NW., Washington, DC 20005-3502

NRC Project Director: Frederick J. Hebdon

Boston Edison Company, Docket No. 50-293, Pilgrim Nuclear Power Station, Plymouth County, Massachusetts

Date of amendment request: March 8, 1990

Description of amendment request: The proposed amendment would lengthen the Logic System Functional Testing surveillance interval from six to eighteen months.

Basis for proposed no signficant hazards consideration determination: The Commission has provided standards for determining whether a significant hazards consideration exists (10 CFR 50.92(c)). A proposed amendment to an operating license for a facility involves no significant hazards considerations if operation of the facility in accordance with a proposed amendment would not: (1) Involve a significant increase in the probability or consequences of an accident previously evaluated; (2) Create the possibility of a new or different kind of accident from an accident previously evaluated; or (3) Involve a significant reduction in a margin of safety.

The licensee addressed the above three standards in the amendment application. In regard to the three standards, the licensee provided the following analysis.

1. The operation of Pilgrim Station in accordance with the proposed amendment will not involve a significant increase in the probability or consequences of an accident previously evaluated.

The proposed amendment does not directly affect the safety functions of any systems since no physical plant modifications are taking place. However, these changes indirectly affect the automatic logic functions of active safety equipment since the testing of these logics influences safety system availability.

The proposed amendment does not involve a significant increase in the probability or consequences of an accident previously evaluated because lengthening the surveillance interval will not adversely affect the ability of the affected safety systems to perform their intended safety functions. The proposed amendment reduces the amount of time the plant would be vulnerable to challenges to the plant safety systems due to surveillance testing.

2. The operation of Pilgrim Station in accordance with the proposed amendment will not create the possibility of a new or different kind of accident from any accident previously evaluated.

The proposed amendment does not create the possibility of a new or different kind of accident from any accident previously evaluated because lengthening the surveillance interval will not adversely affect the responses of the affected safety systems to previously evaluated accidents. The increase in surveillance test interval does not require plant modifications or involve any

changes in Technical Specification setpoints, plant operation, or automatic safety functions.

3. The operation of Pilgrim Station in accordance with the proposed amendment will not involve a significant reduction in the margin of safety.

The proposed change continues to meet the Technical Specification requirements for performing logic system functional tests to verify the equipment is operable. Pilgrim Station currently tests to the individual relay contact level and will continue to do so.

Therefore, the proposed amendment will not involve a significant reduction in the margin of safety because system operability and reactor shutdown capability is still assured. The amendment provides an improvement to plant safety because the occurrence of system inoperability due to surveillance testing is reduced. Additionally, the potential for inadvertent safety system actuations and isolations and their resultant transients is reduced by reducing the need for system testing during plant operation.

This change was reviewed and recommended for approval by the Operations Review Committee and reviewed by the Nuclear Safety Review and Audit Committee.

Based upon the above discussion, the staff proposes to determine that the proposed change does not involve a significant hazards consideration.

Local Public Document Room location: Plymouth Public Library, 11 North Street, Plymouth, Massachusetts 02360

Attorney for licensee: W. S. Stowe, Esq., Boston Edison Company, 800 Boylston Street, 36th Floor, Boston, Massachusetts 02199

NRC Project Director: Richard H. Wessman

Boston Edison Company, Docket No. 50-293, Pilgrim Nuclear Power Station, Plymouth Massachusetts

Date of amendment request: March 15, 1990

Description of amendment request: The proposed amendment would change surveillance requirements for redundant core and containment cooling systems and the allowed out-of-service period for the containment cooling system, diesel generators and low pressure coolant injection pumps.

Basis for proposed no significant hazard consideration determination: The Commission has provided standards for determining whether a significant hazards consideration exists (10 CFR 50.92(c)). A proposed amendment to an operating license for a facility involves no significant hazards considerations if operation of the facility in accordance with a proposed amendment would not: (1) Involve a significant increase in the probability or consequences of an accident previously evaluated; (2) Create the possibility of a new or different kind of accident from an accident previously evaluated; or (3) Involve a significant reduction in a margin of safety.

The licensee addressed the above three standards in the amendment application. In regard to the three standards, the licensee provided the following analysis.

1. The operation of Pilgrim Station in accordance with the proposed amendment will not involve a significant increase in the probability or consequence of an accident previously evaluated.

This change does not alter any equipment configuration or operation.

Current Pilgrim technical specifications requiring immediate and daily surveillances of redundant ECCS equipment are based on the assumption that the increased redundant equipment testing during an LCO provides additional assurance that equipment will be available should it be needed.

Industry experience gained after Pilgrim's technical specifications were developed indicates repetitive surveillance testing can place demands and wear on plant systems without necessarily providing additional confidence of availability.

The normal technical specification required surveillance frequencies are established to provide assurance that the tested systems, once demonstrated operable, can be expected to remain operable during the period between surveillance tests. Therefore, physically redemonstrating operability due to the inoperability of a redundant system provides little in the way of additional assurance.

Since increasing the surveillance frequency when another system is determined to be inoperable does not provide significant additional assurance of system availability, and since increased surveillance frequency can prematurely wear active system components, removal of the increased surveillance requirements benefits plant equipment without resulting in a significant increase in the probability that redundant core or containment cooling systems will be available when required to perform their safety function. Since detailed probabilistic analyses have not been performed for PNPS to quantify the overall impacts on core and containment cooling system availabilities, the allowed OOS times for HPCI, RCIC, and ADS will remain at seven days, as compared to the less restrictive 14 day frequency in Standard Technical Specifications (STS). Also, core and containment cooling pump and valve normal surveillance testing will remain at a one month frequency, compared to the less restrictive three month frequency specified in STS. These factors further ensure that this proposed change does not involve a significant increase in the probability or consequences of a accident previously evaluated.

Reducing the allowed OOS period from 7 days to 72 hours for the Containment Cooling System and Diesel Generators, and eliminating the 30 day OOS period for a single LPCI pump does not increase the probability or consequences of an accident previously evaluated because these changes reduce the time safety equipment is allowed to be inoperable during power operation. These reductions improve overall availability of these systems because, on average, they will be inoperable for shorter time periods. Changing the term "LPCI subsystem" to "LPCI system" in the text and Bases is made to reflect the single system, four pump LPCI design. These changes are inherently conservative.

Removing the footnote and the associated asterisk granting conditional relief from the requirements of section 3.5.B does not increase the probability or consequences of an accident previously evaluated because the footnote has expired and therefore its removal has no impact on section 3.5.B.

Reference to APED-5736 is deleted because it no longer forms the basis for the OOS times or redundant testing requirements. APED-5736 does not address equipment wear and tear due to constant testing nor does it reflect the increase potential for human errors leaving a system inoperable after testing. Its impact on safety is not significant because the proposed amendment reflects STS requirements that are supported by industry experience at nuclear power plants using STS.

Reformatting the text and the other administrative changes do not change or impact the meaning of the technical specifications. Hence, these changes do not affect the probability or consequences of an accident previously analyzed.

2. The operation of Pilgrim Station in accordance with the proposed amendment will not create the possibility of a new or different kind of accident from any accident previously evaluated.

The proposed amendment keeps redundant systems in a state identical to that assumed to exist in the Pilgrim Station accident analysis during normal operations; hence operating Pilgrim in accordance with the proposed amendment will not create the possibility of a new or different kind of accident from any previously analyzed.

Removing the footnote and the associated asterisk granting conditional relief to the requirements of section 3.5.B does not create the possibility of a new or different kind of accident from any previously analyzed because the footnote grants conditional relief and no longer has any impact on technical specification 3.5.B.

Reformatting the text and the other administrative changes do not change technical specification requirements; therefore these changes do not create the possibility of a new kind of accident from any accident previously analyzed.

Reducing the OOS for the Containment Cooling System, the Diesel Generators, and eliminating the 30 day OOS for the inoperability of a single LPCI pump are inherently conservative changes that do not create the possibility of a new or different kind of accident from any accident previously analyzed.

3. The operation of Pilgrim Station in accordance with the proposed amendment will not involve a significant reduction in the margin of safety.

The current technical specifications require an increased surveillance frequency to demonstrate operability. The original intent of requiring the additional testing was to enhance confidence the system would function when called upon. However, normal test frequencies are established to provide assurance a system, once demonstrated operable, will remain operable during the period between surveillance tests. As discussed under (1) above, normal test frequencies provide adequate assurance of system operability. The proposed change provides assurance of operability without the potential increase in risk caused by the system possibly being made inoperable by being misaligned after the test is completed. Therefore, the proposed amendment will not significantly change risk from that assumed for systems during normal operations; hence, the proposed amendment does not involve a significant reduction in the margin of safety.

Removing the footnote associated with Section 3.5.B does not involve a significant reduction in the margin of safety because the footnote has expired and no longer has any impact on 3.5.B requirements.

Reformatting the text and the other administrative changes do not change the technical specification requirements; therefore these changes do not involve a significant reduction in the margin of safety.

Reducing the OOS for the Containment Cooling System and the Diesel Generators, and eliminating the 30 day OOS for the inoperability of a single LPCI pump reduces the time allowed to operate in a Limiting Condition of Operation (LCO), and are therefore conservative changes that do not involve a significant reduction in the margin of safety.

This change has been reviewed and approved by the Operations Review Committee and reviewed by the Nuclear Safety and Audit Committee.

Based upon the above discussion, the staff proposes to determine that the proposed change does not involve a significant hazards consideration.

Local Public Document Room location: Plymouth Library, 11 North Street, Plymouth, Massachusetts 02360.

Attorney for licensee: W. S. Stowe, Boston Edison Company, 800 Boylston Street, 36th floor, Boston, Massachusetts 02199

NRC Project Director: Richard H. Wessman

Carolina Power & Light Company, et al., Docket No. 50-325, Brunswick Steam Electric Plant, Unit 1, Brunswick County, North Carolina

Date of for amendment request: April 19, 1990.

Description of amendment request: The proposed amendment revises the surveillance interval associated with Technical Specification 4.8.1.1.2.d.1 to allow a one-time only extension of these surveillances until October 31, 1990. This extension allows operation of Brunswick Steam Electric Plant, Unit 1 until the upcoming Reload 7 outage currently scheduled to begin on September 8, 1990, thereby avoiding a mid-cycle shutdown solely to perform the diesel generator surveillances.

Basis for proposed no significant hazards consideration determination: The Commission has provided standards for determining whether a no significant hazards consideration exists as stated in 10 CFR 50.92(c). A proposed amendment to an operating license involves no significant hazards consideration if operation of the facility in accordance with the proposed amendment would not: (1) Involve a significant increase in the probability or consequences of an accident previously evaluated; or (2) Create the possibility of a new or different kind of accident from any accident previously evaluated; or (3) Involve a significant reduction in a margin of safety.

Carolina Power & Light Company (the licensee) has reviewed the proposed change and has determined that the requested amendment does not involve a significant hazards consideration for the following reasons:

1. The proposed amendment does not involve a significant increase in the probability or consequences of an accident previously evaluated.

Extending the diesel generator surveillance interval until October 31, 1990 will not result in a significant increase in the probability of the diesel generator failing to perform its intended safety function. The diesel generators have demonstrated an extremely high degree of reliability. The previous Technical Specification 4.8.1.1.2.d.1 surveillance was completed satisfactorily for both diesel generators [1 and 2]. As such, the effects of extending the surveillance interval would be negligible. In addition, the diesel manufacturer has stated that diesel generator reliability will not be adversely affected by delaying the inspection required in Technical Specification 4.8.1.1.2.d.1 until October 31, 1990. This is based on the relatively low number of hours of diesel generator operation during the current operating cycle (approximately 103 hours for diesel generator 1 and 82 hours for diesel generator 2). The vendor's recommended diesel generator inspection interval is at least once per 1000 hours of diesel generator operation. In addition, the diesel generator lube oil is heated in order to avoid cold starting of the diesel. Therefore, the proposed amendment does not involve a significant increase in the probability of a previously evaluated accident.

The diesel generator surveillance requirements are intended to maintain diesel generator reliability at a level which assures that adequate electrical power is available under the most limiting accident conditions within the accident analysis for the Brunswick Plant. The most limiting accident condition includes the loss of off-site power and the loss of one diesel generator. The proposed surveillance frequency will not adversely affect diesel generator availability. As stated above, past diesel generator performance has indicated an extremely high degree for reliability over an extended period of time. Thus, extending the surveillance interval until October 31, 1990 will not significantly affect this reliability. As such, the proposed amendment does not involve a significant increase in the consequences of a previously evaluated accident.

2. The proposed amendment does not create the possibility of a new or different kind of accident from any accident previously evaluated. The proposed amendment only extends the surveillance interval for the diesel generators. There is no change to the plant or its manner of operation. Also, there are no changes to the surveillance acceptance criteria. Therefore, the proposed change can not create the possibility of a new or different kind of accident from any previously evaluated.

3. The proposed amendment does not involve a significant reduction in the margin of safety. Extending the diesel generator surveillance interval to October 31, 1990 will not result in a significant increase in the probability of the diesel generator failing to perform its intended safety function. The diesel generators have demonstrated an extremely high degree of reliability. The previous Technical Specification 4.8.1.1.2.d.1. surveillance was completed satisfactorily for both diesel generators. As such, the effects of extending the surveillance interval would be negligible. In addition, the diesel manufacturer has stated that diesel generator reliability will not be adversely affected by delaying the inspection required in Technical Specification 4.8.1.1.2.d.1 until October 31, 1990. This is based on the relatively low number of hours of diesel generator operation during the current operating cycle (approximately 103 hours for diesel generator 1 and 82 hours for diesel generator 2). The vendor's recommended diesel generator inspection interval is at least once per 1000 hours of diesel generator operation. In addition, the diesel generator lube oil is heated in order to avoid cold starting of the diesel. Therefore, the proposed amendment does not involve a significant reduction in the margin of safety.

The licensee has concluded that the proposed amendment meets the three standards in 10 CFR 50.92 and, therefore, involves no significant hazards consideration.

The NRC staff has made a preliminary review of the licensee's no significant hazards consideration determination and agrees with the licensee's analysis. Accordingly, the Commission proposes to determine that the requested amendment does not involve a significant hazards consideration.

Local Public Document Room location: University of North Carolina at Wilmington, William Madison Randall Library, 601 S. College Road, Wilmington, North Carolina 28403-3297.

Attorney for licensee: R. E. Jones, General Counsel, Carolina Power & Light Company, P.O. Box 1551, Raleigh, North Carolina 27602

NRC Project Director: Elinor G. Adensam

Carolina Power & Light Company, et al., Docket Nos. 50-325 and 50-324, Brunswick Steam Electric Plant, Units 1 and 2, Brunswick County, North Carolina

Date of application for amendments: February 28, 1990

Description of amendment request: The proposed amendment would revise the Technical Specifications (TS) Section 3.7.1.2 to clarify and expand the service water pump operability requirements during various plant operational conditions, thereby reflecting the plant design in a clearer manner. A change to the Bases Section 3/4.7.1 would also be made reflecting the proposed change.

Basis for proposed no significant hazards consideration determination: The Commission has provided standards for determining whether a no significant hazards consideration exists as stated in 10 CFR 50.92(c). A proposed amendment to an operating license involves no significant hazards consideration if operation of the facility in accordance with the proposed amendment would not: (1) Involve a significant increase in the probability or consequences of an accident previously evaluated; or (2) Create the possibility of a new or different kind of accident from any accident previously evaluated; or (3) Involve a significant reduction in a margin of safety.

Carolina Power & Light Company (the licensee) has reviewed the proposed changes and has determined that the requested amendment does not involve a significant hazards consideration for the following reasons:

1. The proposed change allows the use of the present plant design and capabilities to ensure that an adequate supply of water is available for cooling to the diesel generators and other vital equipment. The proposed change requires both the nuclear and the conventional headers to be operable with two nuclear and two conventional service water pumps capable of supplying the headers when the unit is in OPERATIONAL CONDITIONS 1, 2, or 3. These expanded requirements fulfill single failure criteria and will ensure the availability of service water for diesel generator cooling during the initial ten minute period of a design basis accident (DBA) and provide for sufficient service water capability for the post-ten minute period of a DBA. When the unit is in OPERATIONAL CONDITIONS 4 or 5 the number of required pumps drops to any combination of two nuclear and/or conventional service water pumps, provided that there are at least two operable nuclear service water pumps per site. Maintaining two operable service water pumps while in OPERATIONAL CONDITIONS 4 or 5 assures single failure criteria are met and stipulating at least two operable nuclear service water pumps per site assures diesel generator cooling will be available.

The allowed out of service times and compensatory measures established in the revised Action Statement are consistent with those of the existing Technical Specification 3.7.1.2.

Based on this reasoning, the Company [the licensee] has determined that the proposed amendment does not involve a significant increase in the probability or consequences of an accident previously evaluated.

2. The service water system is designed to provide lubrication and cooling of equipment during normal operations and under accident conditions. The system can also be cross-connected to the RHR system during emergencies to provide core flooding capabilities. The service water system aids in mitigation of an accident, but does not act as an initiator of an accident sequence. The proposed change does not affect the ability of the service water system to perform its intended function. The requested amendment will assure that the service water system will be available to provide an adequate supply of cooling water for both normal and emergency operation. Therefore, the proposed amendment does not create the possibility of a new or different kind of accident from any accident previously evaluated.

3. The proposed change clarifies and expands the service water pump operability requirements to better reflect plant design. These expanded requirements will ensure the availability of service water for diesel generator cooling during the initial ten minute period of a DBA and provide for sufficient service water capability for the post-ten minute period of DBA. The proposed change will provide a higher level of assurance of service water system availability for both normal operations and accident conditions. Therefore, the proposed change does not involve a significant reduction in the margin of safety.

The licensee has concluded that the proposed amendment meets the three standards in 10 CFR 50.92 and, therefore, involves no significant hazards consideration.

The NRC staff has made a preliminary review of the licensee's no significant hazards consideration determination and agrees with the licensee's analysis. Accordingly, the Commission proposes to determine that the requested amendment does not involve a significant hazards consideration.

Local Public Document Room location: University of North Carolina at Wilmington, William Madison Randall Library, 601 S. College Road, Wilmington, North Carolina 28403-3297.

Attorney for licensee: R. E. Jones, General Counsel, Carolina Power & Light Company, P.O. Box 1551, Raleigh, North Carolina 27602

NRC Project Director: Elinor G. Adensam

Carolina Power & Light Company, et al., Docket No. 50-400, Shearon Harris Nuclear Power Plant, Unit 1, Wake and Chatham Counties, North Carolina

Date of amendment request: October 26, 1989

Description of amendment request: This amendment request clarifies the requirements of Item 6.a and Action Statement 23 of Technical Specification Table 3.3-3, Engineered Safety Features Actuation System Instrumentation. Currently, the required number of channels for manual initiation of auxiliary feedwater is listed as one per pump. This is correct for the motor driven auxiliary feedwater pumps; however, the turbine driven auxiliary feedwater pump has two control channels per pump, one of which is required to manually start the pump. The amendment request incorporates a separate line item for the motor and turbine driven pumps reflecting the number of channels required for each pump.

Basis for proposed no significant hazards consideration determination: The Commission has provided standards in 10 CFR 50.92(c) for determining whether a significant hazards consideration exists. A proposed amendment to an Operating License for a facility involves no significant hazards consideration if operation of the facility in accordance with the proposed amendment would not: (1) Involve a significant increase in the probability or consequences of an accident previously evaluated, or (2) Create the possibility of a new or different kind of accident from any accident previously evaluated, or (3) Involve a significant reduction in a margin of safety.

As required by 10 CFR 50.91(a), the licensee has provided the following no significant hazards consideration determination:

1. The proposed amendment does not involve a significant increase in the probability or consequences of an accident previously evaluated. The proposed amendment does not introduce any new equipment nor does it require any existing equipment or systems to perform a different type of function than they are currently designed to perform. The change is being made so that Technical Specification Table 3.3-3, Item 6.a more accurately reflects actual plant design, thereby avoiding possible operator error.

The proposed change requires the turbine driven auxiliary feedwater pump to be

declared inoperable if either control channel is inoperable. This is more restrictive than the existing Technical Specification which could be interpreted to allow indefinite operation with one of the turbine driven auxiliary feedwater pump control channels inoperable.

In addition, the action statement associated with Item 6.a (Action 23) has been revised to maintain consistency with the revised limiting condition for operation.

Action Statement 23 also applies to Technical Specification Table 3.3-3 Item 4.a.1, Individual MSIV Closure. However, the proposed change to Action 23 has no affect on the compensatory measures required in the event of an inoperable channel.

2. As stated in Item 1, the proposed amendment does not: (1) alter any existing equipment; or (2) introduce any new equipment. Therefore, the proposed amendment can not create the possibility of a new or different kind of accident from any accident previously evaluated.

3. The proposed amendment does not introduce any new equipment nor does it require any existing equipment or systems to perform a different type of function than they are currently designed to perform. The change is being made so that Technical Specification Table 3.3-3, Item 6.a more accurately reflects actual plant design. The proposed change requires the turbine driven auxiliary feedwater pump to be declared inoperable if either control channel is inoperable. This is more restrictive than the existing Technical Specification which could be interpreted to allow indefinite operation with one of the turbine driven auxiliary feedwater pump control channels inoperable.

In addition, the action statement associated with Item 6.a (Action 23) has been revised to maintain consistency with the revised limiting condition for operation.

Action Statement 23 also applies to Technical Specification Table 3.3-3 Item 4.a.1, Individual MSIV Closure. However, the proposed change to Action 23 has no affect on the compensatory measures required in the event of an inoperable channel.

Based on the above reasoning, the Company has determined that the proposed amendment represents an enhancement and does not involve a reduction in the margin of safety.

The licensee has concluded that the proposed amendment meets the three standards in 10 CFR 50.92 and, therefore, involves no significant hazards consideration.

The NRC staff has made a preliminary review of the licensee's no significant hazards consideration determination. In further support of standard (2), the staff notes that, in addition to not altering existing equipment or adding any new equipment to the plant, the proposed amendment does not modify any existing mode of operation, but merely clarifies the Technical Specifications to reflect the as-built plant. Therefore, the proposed amendment does not create the possibility of a new or different kind of accident from any accident previously evaluated. The staff believes the licensee's analysis and the above discussion support a proposed determination of no significant hazards consideration. Accordingly, the Commission proposes to determine that the requested amendment does not involve a significant hazards consideration.

Local Public Document Room location: Cameron Village Regional Library, 1930 Clark Avenue, Raleigh, North Carolina 27605.

Attorney for licensee: R. E. Jones, General Counsel, Carolina Power & Light Company, P.O. Box 1551, Raleigh, North Carolina 27602

NRC Project Director: Elinor G. Adensam

Duke Power Company, et al., Docket Nos. 50-413 and 50-414, Catawba Nuclear Station, Units 1 and 2, York County, South Carolina

Date of amendment request: February 7, 1990, as supplemented April 12, 1990

Description of amendment request: On May 23, 1989, the NRC issued License Amendments 64 and 58 for Catawba Units 1 and 2, respectively, which allowed the licensee to conduct a demonstration program regarding interface compatibility between three rod cluster control assemblies (RCCAs) supplied by Babcock and Wilcox Fuel Company and Westinghouse fuel assemblies at Catawba Unit 2. Two of the demonstration assemblies had control rods fabricated with Armaloy plated 304 stainless steel cladding. The third assembly had control rods fabricated with chromium carbide coated Inconel 625 cladding.

The proposed change to Technical Specification (TS) Design Features 5.3.2 would allow the licensee an option to withdraw the inconel clad RCCA from the Catawba Unit 2 core and replace it with a Westinghouse 17x17 RCCA if unexpected wear of the inconel RCCA is discovered during forthcoming inspections. This request would involve changing the description of the Control Rod Assemblies in Section 5.3.2 of the TSs for Catawba Unit 2 only. Unit 1 is included because the TSs for both units are combined in one document.

Basis for proposed no significant hazards consideration determination: The Commission has provided standards for determining whether a significant hazards consideration exists (10 CFR 50.92(c)). A proposed amendment to an operating license for a facility involves no significant hazards consideration if operation of the facility in accordance with the proposed amendment would not: (1) Involve a significant increase in the probability or consequences of an accident previously evaluated; or (2) Create the possibility of a new or different kind of accident from any accident previously evaluated; or (3) Involve a significant reduction in a margin of safety.

The proposed revision would not involve a significant increase in the probability or consequences of an accident previously evaluated because the Final Safety Analysis Report (FSAR) Chapter 15 accidents were evaluated assuming all RCCAs were supplied by Westinghouse. The proposed change to TS 5.3.2 provides the flexibility to withdraw the demonstration inconel clad assembly if unexpected wear is discovered during future inspections.

The proposed revision would not create the possibility of a new or different kind of accident from any accident previously evaluated because FSAR Chapter 15 accidents were evaluated assuming all RCCAs were supplied by Westinghouse and no new modes of operation are introduced.

Finally, the proposed revision would not involve a significant reduction in a margin of safety because all the RCCAs should perform in accordance with Catawba TS limits.

Accordingly, the Commission proposes to determine that the amendments do not involve a significant hazards consideration.

Local Public Document Room location: York County Library, 138 East Black Street, Rock Hill, South Carolina 29730

Attorney for licensee: Mr. Albert Carr, Duke Power Company, 422 South Church Street, Charlotte, North Carolina 28242

NRC Project Director: David B. Matthews

Northeast Nuclear Energy Company, et al., Docket No. 50-336, Millstone Nuclear Power Station, Unit No. 2, New London County, Connecticut

Date of amendment request: April 10, 1990

Description of amendment request: The proposed amendment would change Technical Specification 5.6.1(a) to allow enrichments up to 4.5 weight percent U-235 to be stored in the new fuel storage racks and Technical Specification 5.3.1 to allow 4.5 weight percent U-235 to be the maximum fuel enrichment in the reactor core. The current Technical Specification limit on fuel enrichments stored in the new fuel storage racks and in the reactor core is 3.7 weight percent U-235.

Basis for proposed no significant hazards consideration determination: The licensee has reviewed the proposed changes in accordance with 10 CFR 50.92 and has concluded and the staff agrees that they do not involve a significant hazards consideration in that these changes would not:

1. Involve a significant increase in the probability or consequences of an accident previously analyzed.

The criticality analysis that was submitted with the licensee's application determined that adequate margin to criticality can be maintained with enrichments up to 5.0 weight percent U-235 stored in the new fuel storage racks. The analysis included:

° Variable moderator density sensitivity studies

° Removal of fuel rods in assemblies

° Bundle spacing sensitivity studies

In all cases, the calculated K_{eff} remains less than 0.95. The proposed 4.5 weight percent enrichment is bounded by the 5.0 weight percent enrichment analyzed, and is therefore shown to be acceptable.

The use of the higher enrichments in the core could result in a change to many other core parameters; for example, peaking factors or moderator temperature coefficients.

However, all of these related changes have other Technical Specification requirements which are assumed in the plant's safety analysis. The acceptability of the proposed enrichment change with other requirements is verified on a reload specific basis. Therefore, a change in the maximum enrichment limit would not impact any safety analyses because the important inputs to these analyses are protected by other Technical Specifications.

The licensee's submittal also discusses the safety analyses impact of two closely spaced fuel assemblies of 5.0 weight percent enrichment in unborated water. The results show that the acceptance criteria could be violated if two assemblies were brought closer together than a 4-inch edge-to-edge spacing. The spacing of bundles normally loaded in the transfer carriage is greater than 4 inches. However, if an in-transit bundle were brought closer than 4 inches to a bundle in the carriage, then 500 parts per million (ppm) of boron is required to assure that K_{eff} limit is met. This is not a concern for the following reasons:

a. The 5.0 weight percent enrichment discussed in the licensee's submittal exceeds the 4.5 weight percent limit allowed in the spent fuel pool. Therefore, the analyzed case is over-conservative.

b. The only reason that two relatively fresh assemblies would be brought near the transfer canal would be to load them in the core. Under these conditions, the transfer canal would have to be maintained at or above the refueling boron concentration as given in Technical Specification 3.9.1. This is well in excess of the 500 ppm concentration required to assure that the criticality limits are met.

A higher enrichment fuel assembly could also have a higher discharge burnup than an assembly with a lower initial enrichment. This could result in a higher discharge radioactive isotope concentration than a lower initial enrichment assembly. The fuel-handling accidents (both in the core and in the spent fuel pool) have consequences that are limited by relatively short-lived isotopes. The concentration of these isotopes is a function of core power and is not affected by the higher potential discharge burnup. Therefore, the consequences of fuel-handling accidents are not affected by the change.

Since this proposed change would only affect the enrichment limits on fuel in the new fuel vault and in the core and would not affect any safety system, there could be no change in the probability of failure of these systems.

The proposed change itself is to the Technical Specifications only. It would not affect any hardware. Therefore, the proposed change would not affect the probability of any accident previously identified.

2. Create the possibility of a new or different kind of accident from any previously analyzed.

As discussed above, the only safety issue significantly affected by the proposed change is the criticality analysis for the new fuel vault. Since it has been shown that K_{eff} remains below 0.95, no new or different accidents would be created. Further, there would be no failure modes associated with the proposed change, and the proposed change would not affect any hardware. Therefore, the proposed change would not create the possibility of a new or different kind of accident.

3. Involve a significant reduction in a margin of safety.

Since the analyses have shown that increasing the allowable percent enrichment would not increase K_{eff} above the 0.95 limit, it is concluded that this proposed change would have no impact on the margin of safety as defined in the basis for any Technical Specification. The use of higher enrichments in the core could result in a change to other core parameters. However, all of these related changes have other Technical Specification requirements which are assumed in the plant's safety analysis. The acceptability of the proposed enrichment change with the other requirements is verified on a reload specific basis.

Based on the above, the staff proposes to determine that the proposed change does not involve a significant hazards consideration.

Local Public Document Room location: Learning Resources Center, Thomas Valley State Technical College, 574 New London Turnpike, Norwich, Connecticut 06360.

Attorney for licensee: Gerald Garfield, Esquire, Day, Berry & Howard, City Place, Hartford, Connecticut 06103-3499.

NRC Project Director: John F. Stolz

Philadelphia Electric Company, Public Service Electric and Gas Company, Delmarva Power and Light Company, and Atlantic City Electric Company, Docket Nos. 50-277 and 50-278, Peach Bottom Atomic Power Station, Unit Nos. 2 and 3, York County, Pennsylvania

Date of application for amendments: December 28, 1989

Description of amendment request: The proposed amendments would revise the Technical Specifications (TS) of Appendix A of the licenses to reflect the addition of a high-high radiation trip signal requirement for the control circuitry of containment vent and purge isolation valves located on lines larger than two inches in diameter. This TS change is being proposed in response to the requirement of item II.E.4.2(7) of NUREG-0737, "Clarification of TMI Action Plan Requirements," which deals with containment isolation dependability.

Basis for proposed no significant hazards consideration determination: The Commission has provided standards for determining whether a no significant hazards consideration exists as stated in 10 CFR 50.92(c). A proposed amendment to an operating license involves no significant hazards consideration if operation of the facility in accordance with the proposed amendment would not: (1) Involve a significant increase in the probability or consequences of an accident previously evaluated; or (2) Create the possibility of a new or different kind of accident from any accident previously evaluated; or (3) Involve a significant reduction in a margin of safety.

With regard to the proposed amendments, the licensee provided a no significant hazards consideration analysis to support a no significant hazards consideration for these amendments as follows:

The proposed changes to the Peach Bottom operating licenses do not constitute a significant hazards consideration in that they do not:

i) Involve a significant increase in the probability or consequences of an accident previously evaluated.

The modification associated with the proposed Technical Specification changes provide additional means of mitigating the consequences of an accident by adding an isolation signal not previously part of the plant design. The addition of this isolation signal enhances plant safety by adding an additional means of isolating containment. Implementation of this isolation signal is the result of Item II.E.4.2(7) of NUREG-0737 which requires that containment vent and purge isolation valves must close on a high-high radiation signal. The new nonsafety-related isolation signal is isolated from the safety-related portions of the circuits by

qualified relays. Therefore, the proposed changes do not involve a significant increase in the probability or consequences of an accident as previously evaluated in Chapter 14 of the PBAPS Updated Final Safety Analysis Report.

ii) Create the possibility of a new or different kind of accident from any accident previously evaluated.

The modification associated with the proposed Technical Specification changes provided additional means of mitigating the consequences of a plant event by adding an isolation signal not previously part of the plant design. Adding a redundant isolation trip feature does not create a new accident precursor. Therefore, the proposed changes would not create the possibility of a new or different kind of accident from any previously evaluated.

iii) Involve a significant reduction in a margin of safety.

The modification associated with the proposed Technical Specification changes provided additional assurance that the primary containment is isolated during a radiological event. Consequently, the potential for an offsite radiation release is reduced, resulting in an increased margin of safety.

The licensee has concluded that the proposed amendments meet the three standards in 10 CFR 50.92(c), and therefore involve no significant hazards consideration. The NRC staff has made a preliminary review of the licensee's no significant hazards consideration determination and agrees with the licensee's analysis. Accordingly, the Commission proposes to determine that the proposed amendments involve no significant hazards consideration.

Local Public Document Room location: Government Publications Section, State Library of Pennsylvania, (REGIONAL DEPOSITORY) Education Building, Walnut Street and Commonwealth Avenue, Box 1601, Harrisburg, Pennsylvania 17105.

Attorney for Licensee: Troy B. Conner, Jr., 1747 Pennsylvania Avenue, NW., Washington, DC 20006

NRC Project Director: Walter R. Butler

Power Authority of The State of New York, Docket No. 50-286, Indian Point Nuclear Generating Station, Unit No. 3, Westchester County, New York

Date of amendment request: May 19, 1988

Description of amendment request: This application proposes to amend Sections 3.3, 4.5 and 6.9 of the Indian Point 3 Technical Specifications to incorporate specifications for redundant toxic gas monitoring systems at Indian Point 3. These proposed Technical Specifications follow the guidance and intent of NUREG-0737 Item III.D.3.4, "Control Room Habitability and Generic Letter 83-37," NUREG-0737 Technical Specifications.

Basis for proposed no significant hazards consideration determination: The Commission has provided standards for determining whether a significant hazards consideration exists as stated in 10 CFR 50.92. A proposed amendment to an operating license for a facility involves no significant hazards consideration if operation of the facility in accordance with a proposed amendment would not: (1) Involve a significant increase in the probability or consequences of an accident previously evaluated; or (2) Create the possibility of a new or different kind of accident from any accident previously evaluated; or (3) Involve a significant reduction in a margin of safety.

The licensee has evaluated the proposed amendment against the standards provided above and has supplied the following information:

1. Does the proposed license amendment involve a significant increase in the probability or consequences of an accident previously evaluated?

The event related to this proposed license amendment is an accidental release of toxic gases. The proposed license amendment has no effect on the probability of occurrence of this event since the amendment does not involve any changes or revisions to the storage and use of toxic gases at Indian Point 3. The potential consequences of an accidental release of a toxic gas are reduced since the proposed change provides additional assurance that the toxic gas monitoring systems are operable.

2. Does the proposed license amendment create the possibility of a new or different kind of accident from any accident previously evaluated?

The event related to this proposed license amendment is an accidental release of toxic gases. The toxic gas monitoring systems do not physically affect storage or use of any of the identified toxic gases of concern. Therefore, the installation of toxic gas monitoring systems will not create the possibility of a new or different kind of accident.

3. Does the proposed amendment involve a significant reduction in a margin of safety?

The proposed license amendment constitutes an additional control not presently included in Indian Point 3 Technical Specifications. This proposed change does not affect safety limits or margins contained in other Indian Point 3 Technical Specifications. The proposed change will, therefore, not involve any reduction in a margin of safety.

The staff has reviewed and agrees with the licensee's analysis of the significant hazards consideration determination. Based on the review and the above discussion, the staff propose to determine that the proposed change does not involve a significant hazards consideration.

Local Public Document Room location: White Plains Public Library, 100 Martine Avenue, White Plains, New York 10601.

Attorney for licensee: Mr. Charles M. Pratt, 10 Columbus Circle, New York, New York 10019.

NRC Project Director: Robert A. Capra

Power Authority of The State of New York, Docket No. 50-286, Indian Point Nuclear Generating Station, Unit No. 3, Westchester County, New York

Date of amendment request: March 23, 1990

Description of amendment request: The licensee states that the proposed changes would modify Table 4.1-3, "Frequencies for Equipment Tests," which provides surveillance testing requirements for selected plant equipment. One proposed changes would specify control rod movement of at least ten steps in any one direction, thus clarifying the minimum number of steps required to assure control rod freedom of movement. Another proposed change is from a two week surveillance interval to a 31 day surveillance interval.

Basis for proposed no significant hazards consideration determination: The Commission has provided standards for determining whether a significant hazards consideration exists as stated in 10 CFR 50.92. A proposed amendment to an operating license for a facility involves no significant hazards consideration if operation of the facility in accordance with a proposed amendment would not: (1) Involve a significant increase in the probability or consequences of an accident previously evaluated; or (2) Create the possibility of a new or different kind of accident from any accident previously evaluated; or (3) Involve a significant reduction in a margin of safety.

The licensee has evaluated the proposed amendment against the standards provided above and has supplied the following information:

(1) Does the proposed license amendment involve a significant increase in the probability or consequences of an accident previously evaluated?

The proposed change to specify control rod movement of at least 10 steps clarifies the Technical Specifications, ensuring freedom of movement without causing undue core perturbation. The proposed change from a two week to a monthly test interval reduces wear on the drive mechanisms and the rod control cluster cladding. Indian Point 3 has never detected mechanical binding of a control rod during movement exercise, and never has a control rod failed to go to the fully inserted position when required. The proposed changes do not adversely affect

control rod safety functions, and do not involve a significant increase in the probability or consequences of a previously analyzed accident.

(2) Does the proposed license amendment create the possibility of a new or different kind of accident from any accident previously evaluated?

The proposed changes involve specifying the number of steps required to ensure control rod freedom of movement and the frequency at which movement tests would be performed. These changes do not result in a change in rod cluster control system failure modes. Thus, the proposed changes do not adversely affect control rod safety functions, and do not create the possibility of a new or different kind of accident from any accident previously evaluated.

(3) Does the proposed amendment involve a significant reduction in a margin of safety?

The proposed change specifying the minimum number of steps required to ensure control rod freedom of movement provides an additional limitation not currently contained in the Technical Specifications. This change ensures adequate movement without undue core perturbation, and does not involve a reduction in a margin of safety. The proposed change from a two week to a monthly test interval is expected to have an insignificant effect on safety. Control rod safety functions and mechanisms are not affected. The proposed changes are in accordance with Westinghouse Standard Technical Specifications and have been approved for other plants. The proposed changes do not involve a significant reduction in a margin of safety.

The staff has reviewed and agrees with the licensee's analysis of the significant hazards consideration determination. Based on the review and the above discussion, the staff proposes to determine that the proposed change does not involve a significant hazards consideration.

Local Public Document Room location: White Plains Public Library, 100 Martine Avenue, White Plains, New York 10601.

Attorney for licensee: Mr. Charles M. Pratt, 10 Columbus Circle, New York, New York 10019.

NRC Project Director: Robert A. Capra

Power Authority of The State of New York, Docket No. 50-286, Indian Point Nuclear Generating Station, Unit No. 3, Westchester County, New York

Date of amendment request: March 28, 1990

Description of amendment request: The licensee has proposed several changes. The proposed changes are administrative in nature; ensuring consistency between Technical Specification sections, clarifying Bases, correcting inadvertent errors made by previous amendments, and deleting or updating superseded text.

Basis for proposed no significant hazards consideration determination: The Commission has provided standards for determining whether a significant hazards consideration exists as stated in 10 CFR 50.92. A proposed amendment to an operating license for a facility involves no significant hazards consideration if operation of the facility in accordance with a proposed amendment would not: (1) Involve a significant increase in the probability or consequences of an accident previously evaluated; or (2) Create the possibility of a new or different kind of accident from any accident previously evaluated; or (3) Involve a significant reduction in a margin of safety.

The licensee has evaluated the proposed amendment against the standards provided above and has supplied the following information:

(1) Does the proposed licensee amendment involve a significant increase in the probability or consequences of an accident previously evaluated?

The proposed changes do not involve an increase in the probability or consequences of a previously analyzed accident. The changes are administrative in nature - ensuring consistency between technical specification sections, clarifying bases, correcting inadvertent errors made by previous amendments, and deleting or updating superseded text. The changes do not affect plant system operations or functions.

(2) Does the proposed license amendment create the possibility of a new or different kind of accident from any accident previously evaluated?

The proposed changes do not create the possibility of new or different kinds of accidents. The proposed changes are administrative in nature and do not introduce new systems, equipment, or procedures.

(3) Does the proposed amendment involve a significant reduction in a margin of safety?

The proposed changes do not involve a reduction in a margin of safety. The changes are administrative in nature - ensuring consistency between technical specification sections, clarifying Bases, correcting inadvertent errors made by previous amendments, and deleting or updating superseded text. The changes do not affect system operations, functions, procedures or setpoints.

The staff has reviewed and agrees with the licensee's analysis of the significant hazards consideration determination. Based on the review and the above discussion, the staff proposes to determine that the proposed change does not involve a significant hazards consideration.

Local Public Document Room location: White Plains Public Library, 100 Martine Avenue, White Plains, New York 10601.

Attorney for licensee: Mr. Charles M. Pratt, 10 Columbus Circle, New York, New York 10019.

NRC Project Director: Robert A. Capra

Tennessee Valley Authority, Docket Nos. 50-259, 50-260 and 50-296, Browns Ferry Nuclear Plant, Units 1, 2 and 3, Limestone County, Alabama

Date of amendment requests: April 11, 1990 (TS 278)

Description of amendment requests: The proposed license amendment would delete the remainder of Appendix B to the Technical Specifications (TS) regarding reportability of herbicide usage in the Annual Operating Report.

Registration, use, and control of all pesticides is addressed by the Federal Insecticide, Fungicide, and Rodenticide Act. TVA applies only herbicides approved by the Environmental Protection Agency (EPA) for right-of-way maintenance. Herbicide applications are made in accordance with the instructions on their labels and EPA requirements. There is no known NRC requirement for reporting such herbicide usage. There is also no similar requirement in the General Electric Standard Technical Specifications. Since there is no NRC regulatory requirement for herbicide usage and such usage is regulated by the EPA, Appendix B of the Browns Ferry TS for Units 1, 2, and 3 should be deleted.

Basis for proposed no significant hazards consideration determination: The Commission has provided standards for determining whether a significant hazards consideration exists as stated in 10 CFR 50.92(c). 10 CFR 50.91 requires that at the time a licensee requests an amendment, it must provide to the Commission its analyses, using the standards in Section 50.92, on the issue of no significant hazards consideration. Therefore, in accordance with 10 CFR 50.91 and 10 CFR 50.92, the licensee has performed and provided the following analysis:

1. The proposed amendment does not involve a significant increase in the probability or consequence of an accident previously evaluated.

The proposed amendment would delete Appendix B of the TS, which would eliminate the requirement to report herbicide usage for transmission line right-of-way maintenance in the Annual Operating Report. TVA applies only EPA approved herbicides for right-of-way maintenance and EPA regulates their use. Elimination of the reporting requirements for herbicide usage would not increase the probability or consequences of an accident previously evaluated.

2. The proposed amendment does not create the possibility of a new or different kind of accident from any accident previously evaluated.

The proposed amendment eliminates the requirement to report herbicide usage for

transmission line right-of-way maintenance in the Annual Operating Report. Neither herbicide usage nor its reporting to NRC has an adverse impact on any accident previously evaluated, nor do they directly or indirectly affect plant conditions or modes of operation. Therefore, the change does not create the possibility of a new or different kind of accident from any accident previously evaluated.

3. The proposed amendment does not involve a significant reduction in a margin of safety.

The proposed amendment eliminates the requirement to report herbicide usage for transmission line right-of-way maintenance in the Annual Operating Report. Plant safety margins are not affected by such herbicide usage and therefore, the proposed amendment does not involve a reduction in a margin of safety at Browns Ferry.

The staff has reviewed the licensee's no significant hazards consideration determination and agrees with the licensee's analysis. Therefore, the staff proposes to determine that the application for amendments involves no significant hazards considerations.

Local Public Document Room location: Athens Public Library, South Street, Athens, Alabama 35611.

Attorney for licensee: General Counsel, Tennessee Valley Authority, 400 West Summit Hill Drive, E11 B33, Knoxville, Tennessee 37902.

NRC Assistant Director: Suzanne Black

Vermont Yankee Nuclear Power Corporation, Docket No. 50-271, Vermont Yankee Nuclear Power Station, Vernon, Vermont

Date of amendment request: March 9, 1990

Description of amendment request: The proposed amendment would revise the Technical Specification table of primary containment isolation valves subject to Type C leakage tests. The change is to accommodate the installation of new feedwater check valves which are leak-testable and are now included in the Type C leakage test program. Leak testing the feedwater check valve also results in the removal of two valves which are now outside the primary containment boundary from the test program.

Basis for proposed no signficant hazards consideration determination: The Commission has provided standards for determining whether a significant hazards consideration exists (10 CFR 50.92(c)). A proposed amendment to an operating license for a facility involves no significant hazards considerations if operation of the facility in accordance with a proposed amendment would not: (1) Involve a significant increase in the probability or consequences of an accident previously evaluated; (2) Create the possibility of a new or different kind of accident from an accident previously evaluated; or (3) Involve a significant reduction in a margin of safety.

The licensee addressed the above three standards in the amendment application. In regard to the three standards, the licensee provided the following analysis:

The standards used to arrive at a determination that a request for amendment involves no significant hazards considerations are included in the Commission's regulation 10CFR50.92. 10CFR50.92 states that a proposed amendment does not: 1) involve a significant increase in the probability or consequences of an accident previously evaluated; 2) create the possibility of a new or different kind of accident from any accident previously evaluated; or 3) involve a significant reduction in a margin of safety. The discussion below addresses each of these three criteria and demonstrates that the proposed amendment involves no significant hazards considerations.

This proposed change constitutes an improvement in leak testing capability for the feedwater lines at Vermont Yankee. After the replacement of feedwater check valves V2-28A and -28B during the planned 1990 refueling outage, both the inboard and outboard feedwater check valves (four valves total on two feedwater lines) will have the capability to be Type C, Appendix J leak tested. The valves are designed to meet 10CFR50, Appendix J criteria for leak tightness.

The newly installed valves will not alter the manner in which the feedwater system operates. The feedwater check valves function to allow flow in one direction only, toward the reactor vessel. When flow either reverses or stops, the valve will seat itself and prevent reverse flow. The primary difference between the new swing check valves and the older "Y" lift check valves is the inclusion of a resilient seat. The new valves will be able to seat under feedwater system design pressures as well as under the containment design basis accident pressures. Because of the dual seat design of the new feedwater check valves, the integrity of the feedwater line primary containment penetrations is improved.

Inclusion of a leak testing capability for the feedwater check valves also precludes the need to test Reactor Water Cleanup System valve V12-68 and Control Rod Drive System valve V3-181. This will have no effect on the operation of either system.

This proposed change to include feedwater check valves V2-27A, -96A, -28A, and -28B and remove the Reactor Water Cleanup System valve V12-68 and Control Rod Drive System valve V3-181 from Technical Specifications as primary containment isolation valves that are subject to Type C leakage testing does not involve an increase in the probability or consequences of an accident previously evaluated.

Operation of the Feedwater System, the Reactor Water Cleanup system, and the Control Rod Drive System is not altered or reduced from existing requirements and is still bounded by the assumptions used in the safety analysis; thus, the proposed change does not create the possibility of a new or different kind of accident from any event previously evaluated. Leak testing capability is being added to the primary containment boundary penetrations that the feedwater check valves form, thereby eliminating the need to test Reactor Water Cleanup System valve V12-68 and Control Rod Drive System valve V3-181; thus, the proposed changes in such testing involves no decrease in any plant margin of safety.

Therefore, we conclude that the proposed change does not constitute a significant hazards consideration as defined in 10CFR50.92.

The staff has reviewed the licensee's analysis and agrees with it. Therefore, we conclude that the amendment satisfies the three criteria listed in 10 CFR 50.92. Based on that conclusion the staff proposes to make a no significant hazards consideration determination.

Local Public Document Room location: Brooks Memorial Library, 224 Main Street, Brattleboro, Vermont 05301

Attorney for licensee: John A. Ritsher, Esquire, Ropes and Gray, 225 Franklin Street, Boston, Massachusetts 02110

NRC Project Director: Richard H. Wessman

Vermont Yankee Nuclear Power Corporation, Docket No. 50-271, Vermont Yankee Nuclear Power Station, Vernon, Vermont

Date of amendment request: April 8, 1990

Description of amendment request: The proposed amendment would revise the Technical Specifications as follows:

1. Modify the listing of DC systems equipment covered by the Specification to include the batteries and their associated buses in addition to the charges in each system. Presently, only the charges are listed as being required in this section, which contradicts 3.10.B.2 which addressed "battery systems" as being operable.

2. Change the test discharge requirements specified to include a Service (Load Profile) Discharge Test once per operating cycle (approximately 18 months) for two cycles and then a Performance (Capacity) Discharge Test during the third cycle (approximately every five years). This replaces the current requirement to perform a "rated load test" on the battery every operating cycle. Additionally, the requirement for these tests have been expanded to include all safety related batteries.

3. Replaces the requirement to measure temperature on the cells adjacent to the pilot cells with the requirement to measure temperature of the pilot cell itself.

4. Relocates all operability and surveillance requirements for the batteries of the 480V Uninterruptable Power Systems subsection from its present location to the Battery Systems subsection.

5. Adds Limiting Conditions of Operation (LCO) and Surveillance requirements for the AS-2 Alternate Shutdown Battery.

6. Declares the Standby ECCS charger as being available for use as a spare if a ECCS charger becomes inoperative.

7. Adds a requirement to measure and record pilot cell electrolyte level to weekly battery surveillances.

8. Adds a requirement to measure and record electrolyte temperature, level, and cell voltage during quarterly battery surveillance.

9. Adds the AS-2, ECCS, and UPS battery systems to the "Operation With Inoperable Components" section.

Basis for proposed no significant hazards consideration determination: The Commission has provided standards for determining whether a significant hazards consideration exists (10 CFR 50.92(c)). A proposed amendment to an operating license for a facility involves no significant hazards considerations if operation of the facility in accordance with a proposed amendment would not: (1) Involve a significant increase in the probability or consequences of an accident previously evaluated; (2) Create the possibility of a new or different kind of accident from an accident previously evaluated; or (3) Involve a significant reduction in a margin of safety.

The licensee addressed the above three standards in the amendment application. In regard to the three standards, the licensee provided the following analysis:

The discussion below addresses each of the three criteria, and demonstrates that the proposed changes do not constitute a significant hazards consideration.

Proposed change numbers 1 and 4 are changes made to improve the human factor aspect of the technical specifications. These changes do not negatively impact safety in that there is no reduction in the existing requirements. In the case of change number 1, by adding the batteries and their associated DC buses to the list of required equipment, the inconsistency between sections 3.10.A.1 and 3.10.B.2 is removed. The safety is enhanced by ensuring the batteries and associated DC buses in addition to the chargers, are operable and addressed within the scope of the surveillance test program in a consistent and industry accepted manner. Change number 4 does not change any requirements for the UPS battery system, it merely relocates these requirements to the Battery Systems subsection. As such, these changes do not increase the probability or consequences of accidents previously evaluated. Similarly, no new or different kinds of accidents involving safety related systems are created by these changes, nor do any of these changes result in reduced plant operating or design safety margins.

Proposed change number 2 revises the surveillance requirements for the safety related batteries to include a Service Test every operating cycle (approximately every 18 months) for two cycles and then Performance Test at the third cycle (approximately every 5 years). This is an improvement over the existing Technical Specification discharge testing requirements which address only the 125V batteries, address only performance testing, are ambiguous and do not conform with the current industry practices. The result of this improvement is that the probability of detecting a potentially degraded cell or battery is increased, thereby increasing the overall reliability and availability of safety related batteries. There is no equipment or design change associated with this proposed change. Therefore, this change does not increase the probability or consequences of accidents previously evaluated. Similarly, no new or different kinds of accidents involving safety related systems are created by this change, nor does this change result in reduced plant operating or design safety margins.

Proposed change number 3 replaces the requirement to measure the temperatures of cells adjacent to the pilot cell with the new requirement to measure the temperature of the pilot cell (for the purpose of correction specific gravity for temperature). The existing requirement is not currently industry practice or standard. Because this requirement is replaced with a more meaningful requirement, this change does not increase the probability or consequences of accidents previously evaluated. Similarly, no new or different kinds of accidents involving safety related systems are created by this change, nor does this change result in reduced plant operating or design safety margins.

Proposed change number 5 adds LCO and surveillance requirements for the new Alternate Shutdown Battery AS-2. These requirements are consistent with requirements for other safety related batteries. This battery was designed and installed as a safety related battery system to address fire protection concerns in response to the requirements of 10 CFR Part 50, Appendix R. The operability requirements have been proposed to specifically address these fire protection concerns. This battery is a replacement for certain functions of the station battery in an Appendix R event. Hence, the surveillance testing requirements are the same as for the Main Station battery. As such, this change does not increase the probability or consequences of accidents previously evaluated. Similarly, no new or different kinds of accidents involving safety related systems are created by this change, nor does this change result in reduced plant operating or design safety margins.

Proposed change number 6 deletes the ability to take credit for the Standby ECCS charger as a substitute in the case of an ECCS charger failure. This change only impacts the availability for use of this charger as a spare while the failed charger is being repaired. The LCO requirements for the installed charger have not changed. Further, the consequences of the charger failing have not changed. As such, this change does not increase the probability or consequences of an accident previously evaluated, nor does it create the possibility of a new or different type of accident. This change does not result in reduced plant operating or design safety margins.

Proposed change numbers 7 and 8 add the requirement to measure additional critical battery parameters. These will ensure the batteries are monitored for those critical parameters which affect state of charge and to ensure proper electrolyte levels. Because this requirement enhances the surveillance requirements, this change does not increase the probability or consequences of accidents previously evaluated. Similarly, no new or different kinds of accidents involving safety related systems are created by this change, nor does this change result in reduced plant operating or design safety margins.

Proposed change number 9 addresses the action to be taken if one of the AS-2, ECCS, and UPS battery systems become inoperable. This ensures that proper and timely action is taken should an operable condition exist. Because this change only addresses action to be taken if a component in one of these systems becomes inoperable and does not increase the probability or consequences of any accidents previously evaluated. Similarly, no new or different kinds of accidents involving safety related systems are created by this change, nor does this change result in reduced plant operating or design safety margins.

Therefore, we conclude that all the proposed changes do not constitute a significant hazards consideration, as defined in 10 CFR Part 50.92(c).

The staff has reviewed the licensee's analysis and agrees with it. Therefore, we conclude that the amendment satisfies the three criteria listed in 10 CFR 50.92. Based on that conclusion the staff proposes to make a no significant hazards consideration determination.

Local Public Document Room location: Brooks Memorial Library, 224 Main Street, Brattleboro, Vermont 05301

Attorney for licensee: R. K. Gad, III, Esquire, Ropes and Gray, 225 Franklin Street, Boston, Massachusetts 02110

NRC Project Director: Richard H. Wessman

Virginia Electric and Power Company, Docket Nos. 50-338 and 50-339, North Anna Power Station, Units No. 1 and No. 2, Louisa County, Virginia

Date of amendment request: March 23, 1990

Description of amendment request: The proposed changes would revise the Technical Specifications (TS) for the North Anna Power Station, Units No. 1 and No. 2 (NA-1&2). Specifically, the changes would remove the 3.25 limit on

extending surveillance intervals required by the NA-1&2 TS 4.0.2, as encouraged by NRC Generic Letter 89-14. In addition, the proposed changes would extend the NA-1&2 TS 4.0.3 to allow a 24-hour period to complete a missed surveillance requirement before entering into the applicable action statement in accordance with NRC Generic Letter 87-09. The proposed changes will have no adverse affect on operation of NA-1&2. The changes will improve the scheduling of surveillance activities and allow surveillance activities to be postponed when plant conditions are not suitable for their conduct. Implementation of the proposed changes to the surveillance requirements will require no hardware modifications and subsequent operation of the facility will not change the results of any accident analyses described in the NA-1&2 Updated Final Safety Analysis Report (UFSAR).

Specification 4.0.2 of the NA-1&2 TS permits surveillance intervals to be extended up to 25 percent of the specified interval. This extension facilitates the scheduling of surveillance activities and allows surveillance activities to be postponed when plant conditions are not suitable for conducting the surveillance, for example, under transient conditions or other ongoing surveillance or maintenance activities. TS 4.0.2 also limits extending surveillances so that the combined time interval for any three consecutive surveillance intervals does not exceed 3.25 times the specified surveillance interval. The intent of the 3.25 limit is to preclude routine use of the provision for extending a surveillance interval by 25 percent. As currently expressed, this specification is consistent with the Standard TS for Westinghouse Pressurized Water Reactors, NUREG-0452, Revision 4.

On August 21, 1989, the NRC issued Generic Letter 89-14 which provides guidance to licensees for removal of the 3.25 limitation for three consecutive surveillance intervals from the TS. The NRC considers this a line-item improvement to the TS. The revised TS will remove an unnecessary restriction on extending surveillance requirements and will result in a benefit to safety when plant conditions are not conductive to the safe conduct of surveillance requirements. The removal of the 3.25 limit will provide greater flexibility in the use of the provision for extending surveillance intervals, reduce the administrative burden associated with its use, and have a positive effect on safety.

Revised TS 4.0.3 permits delaying the requirement of an action statement for up to 24 hours to permit the completion of a missed surveillance when the allowable outage time limits of the action statement are less then 24 hours or require a shutdown. As discussed in NRC Generic Letter 87-09, it is overly conservative to assume that systems or components are immediately inoperable because a surveillance requirement has not been performed. Generally, the opposite is in fact the case. The vast majority of surveillances confirm that the tested system or component is within requirements and operable. When a surveillance is missed, it is this positive verification of operability that has not been confirmed by the performance of the required surveillance. Because the allowable outage time limits of some action statements do not provide an appropriate time limit for performing a missed surveillance before shutdown requirements may apply, the TS should include a time limit that would allow a delay of the required actions to permit the performance of the missed surveillance.

This time limit should be based on considerations of plant conditions, adequate planning, availability of personnel, the time required to perform the surveillance, as well as the safety significance of the delay in completion of the surveillance. NRC Generic Letter 87-09 states that, based on these considerations, 24 hours is an acceptable time limit for completing a missed surveillance when the allowable outage times of the action statements are less than this time limit or when shutdown action statements apply. The Generic Letter concludes that the 24-hour time limit adequately balances the risks associated with the potential for a plant upset and challenge to safety systems when the alternative is a shutdown to comply with an action statement before the surveillance can be completed.

Basis for proposed no significant hazards consideration determination: The Commission has provided standards for determining whether a significant hazards consideration exists (10 CFR 50.92(c)). A proposed amendment to an operating license for a facility involves no significant hazards consideration if operation of the facility in accordance with the proposed amendment would not: (1) Involve a significant increase in the probability or consequences of an accident previously evaluated; or (2) Create the possibility of a new or different kind of accident from any accident previously evaluated; or (3) Involve a significant reduction in a margin of safety.

The licensee has evaluated the proposed changes in accordance with the criteria above and has made the following determination that the proposed changes do not involve a significant hazards consideration as defined in 10 CFR 50.92 because the changes would not:

1. Involve a significant increase in the probability of occurrence or consequences of any accident or malfunction of equipment which is important to safety and which has been evaluated in the USFAR. Only surveillance requirements are changed, and no new or unique accident precursors are introduced by these changes in surveillance requirements. In fact, the proposed amendments will not significantly affect equipment reliability and do not affect the probability or consequences of accidents previously evaluated in the UFSAR.

2. Create the possibility of a new or different type of accident from those previously evaluated in the safety analysis report. Since the implementation of the proposed changes to the surveillance requirements will require no hardware modifications (i.e., alterations to plant configuration), operation with these proposed TS does not create the possibility for any new or different kind of accident which has not already been evaluated in the UFSAR.

3. Involve a significant reduction in the margin of safety. No physical plant modifications, changes in plant operations, or changes in accident analysis assumptions are being made. The results of the accident analyses which are documented in the UFSAR continue to bound operation under the proposed changes, so that there is no safety margin reduction.

The staff has reviewed the licensee's no significant hazards consideration determination analysis and agrees with the above conclusion. Therefore, the staff proposes to determine that the proposed changes do not involve a significant hazards consideration.

Local Public Document Room location: The Alderman Library, Manuscripts Department, University of Virginia, Charlottesville, Virginia 22901.

Attorney for licensee: Michael W. Maupin, Esq., Hunton and Williams, P.O. Box 1535, Richmond, Virginia 23212.

NRC Project Director: Herbert N. Berkow

Virginia Electric and Power Company, Docket Nos. 50-338 and 50-339, North Anna Power Station, Units No. 1 and No. 2, Louisa County, Virginia

Date of amendment request: March 26, 1990

Description of amendment request: The proposed changes would revise the Technical Specifications (TS) for the North Anna Power Station, Units No. 1 and No. 2 (NA-1&2). Specifically, the proposed changes would add a surveillance requirement to the NA-1&2 TS for cleaning and inspecting the diesel fuel oil storage tanks. In addition, the proposed changes would modify the appropriate NA-1&2 TS action statement to accommodate the new surveillance requirement. The additional surveillance requirement will enhance emergency diesel generator reliability from the cleaning and inspection of the diesel fuel oil storage tanks.

Two underground fuel oil storage tanks are available to provide sufficient fuel to operate two emergency diesel generators at full load for 7 days in accordance with the NA-1&2 design basis. These tanks are missile-protected, seismic Category I tanks. These 50,000 gallon tanks are fed by gravity from a 210,000 gallon above ground main fuel oil storage tank. In addition, these 50,000 gallon tanks can be fed by emergency, seismic Category I, tornado missile and flood-protected truck fill line connections.

General industry experience has indicated that periodic cleaning and inspection of underground tanks is prudent. However, the tanks must be removed from service in order to perform periodic cleaning and/or inspection. The current action statements in the NA-1&2 TS 3.8.1.1 (modes 1 through 4) and TS 3.8.1.2 (modes 5 and 6) do not currently provide for removal of a tank from service.

The proposed changes add a surveillance requirement to clean and inspect the diesel fuel oil storage tanks at least once per 10 years. In addition, the appropriate action requirement would also be modified to allow for removal of the tank for up to 7 days for anticipated maintenance to the tank or associated components.

Provisions are established in the proposed change to the action statement to ensure that with one tank out of service, a minimum of 100,000 gallons of fuel would be available from the above ground tank and arrangements would be made to ensure an additional 50,000 gallons of fuel oil could be delivered in less than a 48-hour period if required. This would ensure operation of the required two emergency diesel generators (one per unit) at full load for 7 days since the tank not removed from operation would provide fuel to operate the two emergency diesel generators for at least 3 1/2 days at full load and backup capabilities to refill the tank in this time frame are established. In the event of an emergency requiring operation of the emergency diesel generators, work on the out-of-service tank would be stopped or completed as appropriate to properly return the tank to service in an expeditious manner. The above ground tank would be sampled and fuel would be transferred to the underground tank. Should the above ground tank become inoperable simultaneously with the emergency diesel generator demand event, fuel would be transported from the prearranged source to the operable underground tank(s).

Basis for proposed no significant consideration determination: The Commission has provided standards for determining whether a significant hazards consideration exists (10 CFR 50.92(c)). A proposed amendment to an operating license for a facility involves no significant hazards consideration if operation of the facility in accordance with the proposed amendment would not: (1) Involve a significant increase in the probability or consequences of an accident previously evaluated; or (2) Create the possibility of a new or different kind of accident from any accident previously evaluated; or (3) Involve a significant reduction in a margin of safety.

The licensee has evaluated the proposed changes in accordance with the criteria above and has made the following determination that the proposed changes do not involve a significant hazards consideration as defined in 10 CFR 50.92 because the changes would not:

(1) Involve a significant increase in the probability or consequence of an accident previously evaluated. These changes do not alter the conditions or assumptions of the accident analysis or the basis of the current TS. The consequence of a diesel generator failure is unchanged. Fuel oil would be available to supply one diesel generator per unit enough fuel to meet the requirement for full-load operation for 7 days.

(2) Create the possibility of a new or different kind of accident from any accident previously identified. These changes do not alter the conditions or assumptions of the accident analysis or the basis of the current TS. No hardware changes are involved in the proposed changes.

(3) Involve a significant reduction in a margin of safety. These changes do not alter the conditions or assumptions of the accident analysis or the basis of the current TS. No hardware changes are involved in the proposed changes.

The staff has reviewed the licensee's no significant hazards consideration determination analysis and agrees with the above conclusion. Therefore, the staff proposes to determine that the proposed changes do not involve a significant hazards consideration.

Local Public Document Room location: The Alderman Library, Manuscripts Department, University of Virginia, Charlottesville, Virginia 22901.

Attorney for licensee: Michael W. Maupin, Esq., Hunton and Williams, P.O. Box 1535, Richmond, Virginia 23212.

NRC Project Director: Herbert N. Berkow

Virginia Electric and Power Company, Docket Nos. 50-338 and 50-339, North Anna Power Station, Units No. 1 and No. 2, Louisa County, Virginia

Date of amendment request: March 29, 1990

Description of amendment request: The proposed changes would revise the Technical Specifications (TS) for the North Anna Power Station, Units No. 1 and No. 2 (NA-1&2). Specifically, the changes would revise the Core Operating Limit Report (COLR) to be in conformance with NRC Generic Letter 88-16 and the guidance provided for TS changes for cycle-specific parameter limits.

The proposed changes are consistent with the requirements of 10 CFR 50.36 and the NRC staff's proposed policy for improving TS delineated in SECY-86-10, "Recommendations for Improving Technical Specifications." The policy allows process variables such as core operational limits to be controlled by specifying them numerically in the TS or by specifying the method of calculating their numerical values if the staff finds that the correct limits will be followed in operating the plant. The proposed revision references the NRC-approved calculation methodologies. The development of cycle-specific core operating limits will continue to be performed by the referenced methodologies which have been accepted by the NRC. The proposed changes to the TS are also considered to be improvements and are consistent with the NRC stated policy for improving TS (52 FR 3788, February 6, 1987).

The current NA-1&2 TS method of controlling reactor physics parameters to assure conformance to 10 CFR 50.36

(which requires the lowest functional performance levels acceptable for continued safe operation) is to specify the values determined to be within the acceptance criteria using an NRC-approved calculation methodology. As previously discussed, the methodologies for calculating these parameter limits have been reviewed and approved by the NRC and are consistent with the applicable limits in the Updated Final Safety Analysis Report (UFSAR).

The removal of cycle-dependent variables from the TS has no impact upon plant operation or safety. No safety-related equipment, safety function, or plant operations will be altered as a result of these proposed changes. Since the applicable UFSAR limits will be maintained and the TS will continue to require operation within the core operational limits calculated by these NRC-approved methodologies, the proposed changes are administrative in nature. Appropriate actions to be taken if limits are violated will also remain in the TS.

The proposed changes will control the cycle-specific parameters within the acceptance criteria and assure conformance to 10 CFR 50.36 by using the approved methodology instead of specifying TS values. The COLR will document the specific parameter limits resulting from the licensee's calculations, including mid-cycle or other revisions to parameter values. Therefore, the proposed changes are in conformance with the requirements of 10 CFR 50.36.

Any changes to the COLR will be made in accordance with the provisions of 10 CFR 50.59. From cycle to cycle, the COLR will be revised such that the appropriate core operating limits for the applicable cycle will apply and TS will not be changed.

Basis for proposed no significant hazards consideration determination: The Commission has provided standards for determining whether a significant hazards consideration exists (10 CFR 50.92(c)). A proposed amendment to an operating license for a facility involves no significant hazards consideration if operation of the facility in accordance with the proposed amendment would not: (1) Involve a significant increase in the probability or consequences of an accident previously evaluated; or (2) Create the possibility of a new or different kind of accident from any accident previously evaluated; or (3) Involve a significant reduction in a margin of safety.

The licensee has evaluated the proposed changes in accordance with the criteria above and has made the following determination that the proposed changes do not involve a significant hazards consideration as defined in 10 CFR 50.92 because the changes would not:

1. Involve a significant increase in the probability or consequences of an accident previously evaluated. The removal of cycle-specific core operating limits from the NA-1&2 TS has no influence or impact on the probability or consequences of any accident previously evaluated. The cycle-specific core operating limits, although not in the TS, will be followed in the operation of NA-1&2. The proposed amendments still require exactly the same actions to be taken when or if limits are exceeded as is required by current NA-1&2 TS. Each accident analysis addressed in the NA-1&2 UFSAR will be examined with respect to changes in cycle-dependent parameters, which are obtained from application of the NRC-approved reload design methodologies, to ensure that the transient evaluation of new reloads are bounded by previously accepted analyses. This examination, which will be performed per requirements of 10 CFR 50.59, ensures that future reloads will not involve an increase in the probability or consequences of an accident previously evaluated.

2. Create the possibility of a new or different kind of accident from any accident previously evaluated. The removal of the cycle-specific variables has no influence or impact, nor does it contribute in any way, to the probability or consequences of an accident. No safety-related equipment, safety function, or plant operation will be altered as a result of the proposed changes. The cycle-specific variables are calculated using the NRC-approved methods and submitted to the NRC to allow the staff to continue to trend the values of these limits. The TS will continue to require operation within the required core operating limits and appropriate actions will be taken when or if limits are exceeded. Therefore, the proposed amendments do not in any way create the possibility of a new or different kind of accident from any accident previously evaluated.

3. Involve in a significant reduction in the margin of safety. The margin of safety is not affected by the removal of cycle-specific core operating limits from the TS. The margin of safety presently provided by the current NA-1&2 TS remains unchanged. Appropriate measures exist to control the values of these cycle-specific limits. The proposed amendments continue to require operation within the core limits as obtained from the NRC-approved reload design methodologies and appropriate actions to be taken when or if limits are violated remain unchanged. The development of the limits for future reloads will continue to conform to those methods described in NRC-approved documentation. In addition, each future reload will involve a 10 CFR 50.59 safety review to assure that operation of the unit within the cycle-specific limits will not involve a reduction in a margin of safety.

Therefore, the proposed changes do not impact the operation of North Anna in a manner that involves a reduction in the margin of safety.

The staff has reviewed the licensee's no significant hazards consideration determination analysis and agrees with the above conclusion. Therefore, the staff proposes to determine that the proposed changes do not involve a significant hazards consideration.

Local Public Document Room location: The Alderman Library, Manuscripts Department, University of Virginia, Charlottesville, Virginia 22901.

Attorney for licensee: Michael W. Maupin, Esq., Hunton and Williams, P.O. Box 1535, Richmond, Virginia 23212.

NRC Project Director: Herbert N. Berkow

Washington Public Power Supply System, Docket No. 50-397, Nuclear Project No. 2, Benton County, Washington

Date of amendment request: March 30, 1990

Description of amendment request: The licensee requested that Technical Specification 3/4.8.1, "A.C. Sources," be revised by replacing the surveillance requirements applicable to the fuel oil for the emergency diesel generators. Specifically, surveillance requirements 4.8.1.1.2.b, c, and d would be replaced. The effects of the requested change are: (1) to require more frequent check and removal of accumulated water, if found, from the fuel storage tanks; (2) to increase the frequency of and change the method for testing stored fuel; (3) to modify the test procedure and acceptance criteria for new fuel oil to be added to the storage tanks; (4) to specify alternate test methods for determining some fuel oil properties; and (5) to delete some tests currently being performed on stored fuel oil.

Basis for Proposed No Significant Hazards Consideration Determination: The licensee's objectives in proposing the changes are to achieve an increased and more effective ability to detect unsatisfactory fuel oil, and to utilize testing methodology that can be performed onsite with more immediate results and that is simpler to perform.

The Commission has provided standards for determining whether a significant hazards consideration exists as stated in 10 CFR 50.92. A proposed amendment to an operating license for a facility involves no significant hazards considerations if operation of the facility in accordance with a proposed amendment would not: (1) Involve a significant increase in the probability or consequences of an accident previously evaluated; (2) Create the possibility of a new or different kind of accident from any accident previously evaluated; or (3) Involve a significant reduction in a margin of safety.

The Supply System has evaluated this amendment request per 10 CFR 50.92 and determined that it does not represent a significant hazard because it does not:

1. Involve a significant increase in the probability or consequences of an accident previously evaluated.

[T]he proposed program represents a more comprehensive, accurate method for determining fuel suitability. As such the adoption of this program cannot impact the probability or consequences of an accident previously evaluated because the fuel supporting the operability of the diesel generators (utilized in accident analysis) will be tested to a more conservative program. As such, diesel generator operability continues to be maintained.

2. Create the possibility of a new or different kind of accident from any accident previously evaluated.

The design function and operation of the DG [diesel generator] fuel oil system is not affected by this change. There are no new modes of operation introduced. The reliability of the DG system to provide an emergency source of power is not reduced as no fuel oil acceptance or long term storage criteria are being compromised. [T]he proposed program will provide a more accurate assessment of fuel oil suitability. Hence no new or different kind of accidents from any previously evaluated are introduced by this change.

3. Involve a significant reduction in a margin of safety.

No reduction in the margin of safety is involved as this proposed change provides a more comprehensive program for determining fuel oil properties and their impact on diesel generator operability. As such, this program helps assure that reliability and operability of the diesel generators are maintained.

The NRC staff has reviewed the licensee's analysis and based on that review, it appears that the three criteria are satisfied. Therefore the staff proposes to determine that the amendment involves no significant hazards consideration.

Local Public Document Room location: Richland City Library, Swift and Northgate Streets, Richland, Washington 99352.

Attorneys for licensees: Nicholas S. Reynolds, Esq., Bishop, Cook, Purcell and Reynolds, 1400 L Street, NW., Washington, DC 20005-3502 and G.E. Doupe, Esq., Washington Public Power Supply System, P.O. Box 968, 3000 George Washington Way, Richland, Washington 99352.

NRC Project Director: Charles M. Trammell, Acting

PREVIOUSLY PUBLISHED NOTICES OF CONSIDERATION OF ISSUANCE OF AMENDMENTS TO OPERATING LICENSES AND PROPOSED NO SIGNIFICANT HAZARDS CONSIDERATION DETERMINATION AND OPPORTUNITY FOR HEARING

The following notices were previously published as separate individual notices. The notice content was the same as above. They were published as individual notices either because time did not allow the Commission to wait for this biweekly notice or because the action involved exigent circumstances. They are repeated here because the biweekly notice lists all amendments issued or proposed to be issued involving no significant hazards consideration.

For details, see the individual notice in the **Federal Register** on the day and page cited. This notice does not extend the notice period of the original notice.

Boston Edison Company, Docket No. 50-293, Pilgrim Nuclear Power Station Plymouth, Massachusetts

Date of amendment request: April 2, 1990

Description of amendment request: The proposed amendment would revise the Technical Specifications to correct the setpoint for the Average Power Range Monitor upscale control rod block in the startup and refuel modes. In addition, the surveillance requirements and limiting conditions for operation for the maximum fraction of limiting power density are revised.

Date of publication of individual notice in **Federal Register:** April 9, 1990 (55 FR 13202)

Expiration date of individual notice: May 9, 1990

Local Public Document Room location: The Plymouth Library, 11 North Street, Plymouth, Massachusetts 02360.

Pennsylvania Power and Light Company, Docket Nos. 50-387 and 50-388 Susquehanna Steam Electric Station, Units 1 and 2, Luzerne County, Pennsylvania

Date of amendment request: March 16, 1990, as revised April 2, 1990

Brief description of amendment request: These amendments would change the Technical Specifications by eliminating the quick loading requirements of the diesel generators during monthly testing, and by incorporating certain footnotes that allow the diesel generators to be prelubed and prewarmed prior to surveillance testing. Additionally, load testing requirements have been modified to include a load range rather than a specific load, and editorial changes are proposed for the purpose of achieving clarity.

Date of publication of individual notice in **Federal Register:** April 16, 1990 (55 FR 14150)

Expiration date of individual notice: May 16, 1990

Local Public Document Room location: Osterhout Free Library, Reference Department, 71 South Franklin Street, Wilkes-Barre, Pennsylvania 18701.

NOTICE OF ISSUANCE OF AMENDMENT TO FACILITY OPERATING LICENSE

During the period since publication of the last biweekly notice, the Commission has issued the following amendments. The Commission has determined for each of these amendments that the application complies with the standards and requirements of the Atomic Energy Act of 1954, as amended (the Act), and the Commission's rules and regulations. The Commission has made appropriate findings as required by the Act and the Commission's rules and regulations in 10 CFR Chapter I, which are set forth in the license amendment.

Notice of Consideration of Issuance of Amendment to Facility Operating License and Proposed No Significant Hazards Consideration Determination and Opportunity for Hearing in connection with these actions was published in the **Federal Register** as indicated. No request for a hearing or petition for leave to intervene was filed following this notice.

Unless otherwise indicated, the Commission has determined that these amendments satisfy the criteria for categorical exclusion in accordance with 10 CFR 51.22. Therefore, pursuant to 10 CFR 51.22(b), no environmental impact statement or environmental assessment need be prepared for these amendments. If the Commission has prepared an environmental assessment under the special circumstances provision in 10 CFR 51.12(b) and has made a determination based on that assessment, it is so indicated.

For further details with respect to the action see (1) the applications for

amendments, (2) the amendments, and (3) the Commission's related letters, Safety Evaluations and/or Environmental Assessments as indicated. All of these items are available for public inspection at the Commission's Public Document Room, the Gelman Building, 2120 L Street, NW., Washington, DC, and at the local public document rooms for the particular facilities involved. A copy of items (2) and (3) may be obtained upon request addressed to the U.S. Nuclear Regulatory Commission, Washington, DC 20555, Attention: Director, Division of Reactor Projects.

Arkansas Power & Light Company, Docket No. 50-313, Arkansas Nuclear One, Unit 1, Pope County, Arkansas

Date of amendment request: October 19, 1989

Brief description of amendment: The amendment changed TS 3.2.1.2 regarding the required temperature for the piping and valves necessary to establish a flow path from the boric acid addition tank to the makeup system. The required temperature for the piping and valves is changed from a comparison to the tank temperature to a temperature of at least 10° F above the crystallization temperature for the concentration in the tank.

Date of issuance: April 18, 1990

Effective date: 30 days from its date of issuance

Amendment No.: 130

Facility Operating License No. DPR-51. Amendment revised the Technical Specifications.

Date of initial notice in **Federal Register:** March 7, 1990 (55 FR 8215) The Commission's related evaluation of the amendment is contained in a Safety Evaluation dated April 18, 1990.

No significant hazards consideration comments received: No.

Local Public Document Room location: Tomlinson Library, Arkansas Tech University, Russellville, Arkansas 72801

Baltimore Gas and Electric Company, Docket Nos. 50-317 and 50-318, Calvert Cliffs Nuclear Power Plant, Unit Nos. 1 and 2, Calvert County, Maryland

Date of application for amendments: November 1, 1988, as supplemented July 21, 1989 and November 21, 1989.

Brief description of amendments: These amendments modify the Units 1 and 2 Technical Specifications (TS) by incorporating recommendations provided by the NRC staff in Generic Letter 87-09 related to the applicability of the surveillance requirements of TS Section 4.0.

Date of issuance: April 16, 1990

Effective date: April 16, 1990

Amendment Nos.: 141 (Unit 1) and 124 (Unit 2)

Facility Operating License Nos. DPR-53 and DPR-69. Amendments revised the Technical Specifications.

Date of initial notice in **Federal Register:** April 5, 1989 (54 FR 13757) The Commission's related evaluation of these amendments is contained in a Safety Evaluation dated April 16, 1990.

No significant hazards consideration comments received: No

Local Public Document Room location: Calvert County Library, Prince Frederick, Maryland.

Commonwealth Edison Company, Docket Nos. 50-456 and 50-457, Braidwood Station, Unit Nos. 1 and 2, Will County, Illinois

Date of application for amendments: October 19, 1989, as supplemented January 9, 1990, and February 16, 1990.

Brief description of amendments: These amendments approve changes to the Technical Specifications and the associated Bases to allow the use of Vantage 5 fuel.

Date of issuance: April 19, 1990

Effective date: May 4, 1990

Amendment Nos.: 23 and 23

Facility Operating License Nos. NPF-72 and NPF-77. The amendments revised the Technical Specifications.

Date of initial notice in **Federal Register:** January 24, 1990 (55 FR 2433) The Commission's related evaluation of the amendments is contained in a Safety Evaluation dated April 19, 1990.

No significant hazards consideration comments received: No

Local Public Document Room location: Braidwood Station, the Wilmington Township Public Library, 201 S. Kankakee Street, Wilmington, Illinois 60481.

Consolidated Edison Company of New York, Docket No. 50-247, Indian Point Nuclear Generating Unit No. 2, Westchester County, New York

Date of application for amendment: June 20, 1989, as supplemented by letters dated August 25, 1989; October 23, 1989; January 19, 1990; January 24, 1990; February 9, 1990; February 23, 1990; and March 5, 1990.

Brief description of amendment: The amendment revises the Technical Specifications to permit reracking of the spent fuel storage pit with high density storage racks containing "Boraflex" as a neutron absorber. The high density storage racks will increase the spent fuel storage pit storage capacity from 980 to 1376 fuel assemblies. This change also increases the fuel enrichment from 4.3 w/o U-235 to 5.0 w/o U-235.

Date of issuance: April 19, 1990

Effective date: April 19, 1990

Amendment No.: 150

Facility Operating License No. DPR-26: Amendment revised the Technical Specifications.

Date of initial notice in **Federal Register:** August 25, 1989 (54 FR 35421) The Commission's related evaluation of the amendment is contained in a Safety Evaluation dated April 19, 1990.

No significant hazards consideration comments received: No

Local Public Document Room location: White Plains Public Library, 100 Martine Avenue, White Plains, New York 10610.

Duke Power Company, Dockets Nos. 50-369 and 50-370, McGuire Nuclear Station, Units 1 and 2, Mecklenburg County, North Carolina

Date of application for amendments: February 15, 1990, as supplemented March 19, 1990.

Brief description of amendments: The amendments change Technical Specification (TS) 4.4.5 and the associated Bases to allow use of the Babcock and Wilcox kinetic sleeving process for steam generator tube repair as an alternative to plugging.

Date of issuance: April 17, 1990

Effective date: April 17, 1990

Amendment Nos.: 107 and 89

Facility Operating License Nos. NPF-9 and NPF-17: Amendments revised the Technical Specifications.

Date of initial notice in **Federal Register:** March 14, 1990 (55 FR 9520) The March 19, 1990, supplement provided clarifications and commitments in the associated TS Bases. The supplement did not alter the Commission's initial determination of no significant hazards consideration. The Commission's related evaluation of the amendments is contained in a Safety Evaluation dated April 17, 1990.

No significant hazards considerations received: No.

Local Public Document Room location: Atkins Library, University of North Carolina, Charlotte (UNCC Station), North Carolina 28223

Duquesne Light Company, Docket Nos. 50-334 and 50-412, Beaver Valley Power Station, Unit Nos. 1 and 2, Shippingport, Pennsylvania

Date of application for amendments: February 7, 1990

Brief description of amendments: The amendments revise Sections 3.8.2.1 and 4.8.2.1 of the Units' Technical Specifications to more closely resemble the Standard Westinghouse Technical Specifications. The major change is the

imposition of the requirement that the operable 120-volt A.C. vital bus must be energized from an inverter connected to a D.C. bus.

Date of issuance: April 12, 1990

Effective date: April 12, 1990

Amendment Nos.: 153 for Unit 1; 30 for Unit 2

Facility Operating License Nos. DPR-66 and NPF-73. Amendments revised the Technical Specifications.

Date of initial notice in **Federal Register:** March 7, 1990 (55 FR 8224) The Commission's related evaluation of the amendments is contained in a Safety Evaluation dated April 12, 1990

No significant hazards consideration comments received: No.

Local Public Document Room location: B. F. Jones Memorial Library, 663 Franklin Avenue, Aliquippa, Pennsylvania 15001.

Florida Power Corporation, et al., Docket No. 50-302, Crystal River Unit No. 3 Nuclear Generating Plant, Citrus County, Florida

Date of application for amendment: March 26, 1990

Brief description of amendment: This amendment adds a footnote to TS 3.9.8.2 which allows either the normal or emergency power source for each decay heat loop to be inoperable when in Mode 6 with the water level above the top of the fuel but less than 23 feet. A Temporary Waiver of Compliance was issued on March 26, 1990 to permit utilization of this change until the amendment could be issued.

Date of issuance: April 9, 1990

Effective date: April 9, 1990

Amendment No.: 127

Facility Operating License No. DPR-72. Amendment revised the Technical Specifications.

Public comments requested as to proposed no significant hazards consideration: No. The Commission's related evaluation of the amendment, finding of emergency circumstances and final determination of no significant hazards consideration are contained in a Safety Evaluation dated April 9, 1990.

Attorney for licensee: A. H. Stephens, General Counsel, Florida Power Corporation, MAC-A5D, P.O. Box 14042, St. Petersburg, Florida 33733.

Local Public Document Room Location: Crystal River Public Library, 668 N.W. First Avenue, Crystal River, Florida 32629

NRC Project Director: Herbert N. Berkow

General Electric Company Docket No. 50-183, ESADA Vallecitos Experimental Superheat Reactor (EVESR)

Date of amendment request: November 29, 1989

Brief description of amendment: The amendment would modify a license condition to delete the requirement that the annual report to the NRC be submitted 60 days after each annual inspection is completed and add the requirement that the average interval between annual reports be one year and may extend on occasion up to 15 months for a valid reason.

Date of issuance: April 6, 1990

Effective date: April 6, 1990

Amendment No.: 5

Facility Operating License No. DR-10: Amendment revised a license condition.

Date of initial notice in **Federal Register:** February 7, 1990 (55 FR 4271) The Commission's related evaluation of the amendment is contained in a Safety Evaluation dated April 6, 1990.

No significant hazards consideration comments received: No

Local Public Document Room Location: N/A

Georgia Power Company, Oglethorpe Power Corporation, Municipal Electric Authority of Georgia, City of Dalton, Georgia, Docket No. 50-424, Vogtle Electric Generating Plant, Unit 1, Burke County, Georgia

Date of application for amendment: July 31, 1989

Brief description of amendment: The amendment adds two phrases which were incorrectly omitted from Appendix C, "Antitrust Conditions," of the operating license for Vogtle Electric Generating Plant, Unit 1.

Date of issuance: April 11, 1990

Effective date: April 11, 1990

Amendment No.: 30

Facility Operating License No. NPF-68: Amendment revised the Antitrust License Conditions.

Date of initial notice in **Federal Register:** November 1, 1989 (54 FR 46150) The Commission's related evaluation of the amendment is contained in an Environmental Assessment dated March 28, 1990 (55 FR 13340) and in a Safety Evaluation dated April 11, 1990.

No significant hazards consideration comments received: No.

Local Public Document Room location: Burke County Library, 412 Fourth Street, Waynesboro, Georgia 30830

Houston Lighting & Power Company, City Public Service Board of San Antonio, Central Power and Light Company, City of Austin, Texas, Docket Nos. 50-498 and 50-499, South Texas Project, Units 1 and 2, Matagorda County, Texas

Date of amendment request: March 7, 1990, as supplemented April 3, 1990.

Brief description of amendments: The amendments revised Table 3.3.3.6 of the Technical Specifications to eliminate the applicability of Action 38 to the pressure level monitoring instrumentation and incorporated Action 43. Action 43 considers the additional redundancy existing at the South Texas Project to measure pressurizer level.

Date of issuance: April 13, 1990

Effective date: 12:01 a.m., April 16, 1990

Amendment Nos.: 14 and 4

Facility Operating License Nos. NPF-76 and NPF-80. Amendment revised the Technical Specifications.

Date of initial notice in **Federal Register:** March 16, 1990 (55 FR 10017) The April 3, 1990, submittal provided an explanation of the circumstances for expedited processing and did not change the original finding of no significant hazards consideration.

The Commission's related evaluation of the amendments, finding of circumstances and final determination of no significant hazards consideration are contained in a Safety Evaluation dated April 13, 1990.

No significant hazards consideration comments received: No.

Local Public Document Rooms Location: Wharton County Junior College, J. M. Hodges Learning Center, 911 Boling Highway, Wharton, Texas 77488 and Austin Public Library, 810 Guadalupe Street, Austin, Texas 78701

Indiana Michigan Power Company, Dockets Nos. 50-315 and 50-316, Donald C. Cook Nuclear Plant, Units Nos. 1 and 2, Berrien County, Michigan

Date of application for amendments: July 31, 1987 (supplemented October 26, 1987)

Brief description of amendments: The proposed amendments would incorporate TS associated with the radiation monitoring requirements set forth in NUREG-0737 and clarified in Generic Letter 83-37.

Date of issuance: April 6, 1990

Effective date: April 6, 1990

Amendment Nos.: 134 and 119

Facility Operating License Nos. DPR-58 and DPR-74. Amendments revised the Technical Specifications.

Date of initial notice in Federal Register: September 9, 1987 (52 FR 34012). The Commission's related evaluation of the amendments is contained in a Safety Evaluation dated April 6, 1990.

No significant hazards consideration comments received: No.

Local Public Document Room location: Maude Preston Palenske Memorial Library, 500 Market Street, St. Joseph, Michigan 49085.

Indiana Michigan Power Company, Dockets Nos. 50-315 and 50-316, Donald C. Cook Nuclear Plant, Units Nos. 1 and 2, Berrien County, Michigan

Date of application for amendments: January 12, 1989.

Brief description of amendments: These amendments modify Technical Specification Table 3.3-3 (Engineered Safety Features Actuation System Instrumentation) so that it more accurately reflects the actuation signals for the auxiliary feedwater (AFW) system.

Date of issuance: April 9, 1990

Effective date: April 9, 1990

Amendment Nos.: 135 and 120

Facility Operating License Nos. DPR-58 and DPR-74. Amendments revised the Technical Specifications.

Date of initial notice in Federal Register: November 29, 1989 (54 FR 49131). The Commission's related evaluation of the amendments is contained in a Safety Evaluation dated April 9, 1990.

No significant hazards consideration comments received: No.

Local Public Document Room location: Maude Preston Palenske Memorial Library, 500 Market Street, St. Joseph, Michigan 49085.

Nebraska Public Power District, Docket No. 50-298, Cooper Nuclear Station, Nemaha County, Nebraska

Date of amendment request: February 12, 1990

Brief description of amendment: The amendment changed the Technical Specifications to reflect the Cycle 14 Reload. These changes include the authorization to use GE8X8NB fuel assemblies, the reduction of the Minimum Critical Power Ratio (MCPR) Safety Limit from 1.07 to the 1.06, a more generic description of the allows fuel types, and various editorial changes to reflect the use of currently approved analytical methodology for Cycle 14.

Date of issuance: April 12, 1990

Effective date: April 12, 1990

Amendment No.: 133

Facility Operating License No. DPR-46. Amendment revised the Technical Specifications.

Date of initial notice in Federal Register: March 7, 1990 (55 FR 8227) The Commission's related evaluation of the amendment is contained in a Safety Evaluation dated April 12, 1990.

No significant hazards consideration comments received: No.

Local Public Document Room location: Auburn Public Library, 118 15th Street, Auburn, Nebraska 68305.

Northeast Nuclear Energy Company, Docket No. 50-245, Millstone Nuclear Power Station, Unit No. 1, New London County, Connecticut

Date of application for amendment: November 28, 1989

Brief description of amendment: The change to the Technical Specifications would lower the minimum condensate demineralizer capacity from 30 pounds to 5 pounds (as chloride ion). Requirements regarding regenerated demineralizer resin were deleted since the resin is no longer regenerated.

Date of issuance: April 11, 1990

Effective date: April 11, 1990

Amendment No.: 44

Facility Operating License No. DPR-21. Amendment revised the Technical Specifications.

Date of initial notice in Federal Register: December 27, 1989 (54 FR 53208) The Commission's related evaluation of the amendment is contained in a Safety Evaluation dated April 11, 1990

No significant hazards consideration comments received: No.

Local Public Document Room location: Waterford Public Library, 49 Rope Ferry Road, Waterford, Connecticut 06385.

Omaha Public Power District, Docket No. 50-285, Fort Calhoun Station, Unit No. 1, Washington County, Nebraska

Date of amendment request: February 21, 1990

Brief description of amendment: The amendment modified the Fort Calhoun Technical Specifications to allow a performance of a functional test of the steam driven Auxiliary Feedwater pump prior to achieving criticality. In addition, some administrative changes were made.

Date of issuance: April 9, 1990

Effective date: April 9, 1990

Amendment No.: 127

Facility Operating License No. DPR-40. Amendment revised the Technical Specifications.

Date of initial notice in Federal Register: March 7, 1990 (55 FR 8231) The Commission's related evaluation of the amendment is contained in a Safety Evaluation dated April 9, 1990.

No significant hazards consideration comments received: No.

Local Public Document Room location: W. Dale Clark Library, 215 South 15th Street, Omaha, Nebraska 68102

Omaha Public Power District, Docket No. 50-285, Fort Calhoun Station, Unit No. 1, Washington County, Nebraska

Date of amendment request: February 1, 1990

Brief description of amendment: The amendment made changes to the Fort Calhoun Technical Specifications (TSs) to provide limiting conditions for operation and surveillance requirements consistent with modifications that will be made to the control room air treatment system. In addition, changes were made in the surveillance requirements of the TSs for: the HEPA filters and charcoal adsorbers for the control room, spent fuel storage pool area, and safety injection pump room to change the reference to ANSI N510-1975 to ANSI N510-1980, and recirculation heat removal system (shutdown cooling system) to change the maximum allowable leakage rate.

Date of issuance: April 12, 1990

Effective date: April 12, 1990

Amendment No.: 128

Facility Operating License No. DPR-40. Amendment revised the Technical Specifications.

Date of initial notice in Federal Register: February 21, 1990 (55 FR 6111) The Commission's related evaluation of the amendment is contained in a Safety Evaluation dated April 12, 1990.

No significant hazards consideration comments received: No.

Local Public Document Room location: W. Dale Clark Library, 215 South 15th Street, Omaha, Nebraska 68102

Pacific Gas and Electric Company, Docket Nos. 50-275 and 50-323, Diablo Canyon Nuclear Power Plant, Units 1 and 2, San Luis Obispo County, California

Date of application for amendments: March 14, 1990 (Reference LAR 90-04).

Brief decription of amendments: The amendments revised the Technical Specifications (TS) to change the scheduled date for removal of the Boron Injection Tank (BIT) from Diablo Canyon Unit 2. Specifically, the change will require the previously approved BIT removal to be implemented at the fourth refueling outage for both units. The previous TS required the BIT removal to be implemented at the third refueling outage for Diablo Canyon Unit 2 and the fourth refueling outage for Unit 1.

Date of issuance: April 20, 1990
Effective date: April 20, 1990
Amendment Nos.: 52 and 51
Facility Operating License Nos. DPR-80 and DPR-82: Amendments changed the Technical Specifications.
Date of initial notice in **Federal Register:** March 20, 1990 (55 FR 10332) The Commission's related evaluation of the amendments is contained in a Safety Evaluation dated April 20, 1990.
No significant hazards consideration comments received: No.
Local Public Document Room location: California Polytechnic State University Library, Government Documents and Maps Department, San Luis Obispo, California 93407.

Pennsylvania Power and Light Company, Docket No. 50-388 Susquehanna Steam Electric Station, Unit 2, Luzerne County, Pennsylvania

Date of application for amendment: June 9, 1989 as clarified September 26, 1989
Brief description of amendment: Technical Specifications changed to support Drywell Cooling System modifications.
Date of issuance: April 5, 1990
Effective date: Effective upon startup following the refueling and inspection outage scheduled to begin March 1991.
Amendment No.: 64
Facility Operating License No. NPF-22. This amendment revised the Technical Specifications.
Date of initial notice in **Federal Register:** July 26, 1989 (54 FR 31110) The Commission's related evaluation of the amendment is contained in a Safety Evaluation dated April 5, 1990.
No significant hazards consideration comments received: No
Local Public Document Room location: Osterhout Free Library, Reference Department, 71 South Franklin Street, Wilkes-Barre, Pennsylvania 18701.

Pennsylvania Power and Light Company, Docket Nos. 50-387 and 50-388 Susquehanna Steam Electric Station, Units 1 and 2, Luzerne County, Pennsylvania

Date of application for amendments: October 2, 1989
Brief description of amendments: These amendments changed the Technical Specifications to remove 3.25 limit on extension of surveillance intervals.
Date of issuance: April 5, 1990
Effective date: April 5, 1990
Amendment Nos.: 97 and 65
Facility Operating License Nos. NPF-14 and NPF-22. These amendments revised the Technical Specifications.
Date of initial notice in **Federal Register:** February 21, 1990 (55 FR 6113) The Commission's related evaluation of the amendments is contained in a Safety Evaluation dated April 5, 1990.
No significant hazards consideration comments received: No
Local Public Document Room location: Osterhout Free Library, Reference Department, 71 South Franklin Street, Wilkes-Barre, Pennsylvania 18701.

Philadelphia Electric Company, Docket No. 50-353, Limerick Generating Station, Unit 2, Montgomery County, Pennsylvania

Date of application for amendment: January 29, 1990
Brief description of amendment: The amendment changed the Technical Specifications to allow the required source range monitor count rate to be reduced while ensuring that the design level of counting certainty is maintained at all times for the monitors.
Date of issuance: April 9, 1990
Effective date: April 9, 1990
Amendment No. 3
Facility Operating License No. NPF-85. This amendment revised the Technical Specifications.
Date of initial notice in **Federal Register:** March 7, 1990 (55 FR 8231) The Commission's related evaluation of the amendment is contained in a Safety Evaluation dated April 9, 1990.
No significant hazards consideration comments received: No
Local Public Document Room location: Pottstown Public Library, 500 High Street, Pottstown, Pennsylvania 19464.

Power Authority of the State of New York, Docket No. 50-333, James A. FitzPatrick Nuclear Power Plant, Oswego County, New York

Date of application for amendment: January 16, 1990
Brief description of amendment: The amendment revises the crescent area cooler surveillance test requirements to reflect modifications that cycle the cooler fans rather than modulate the cooler water outlet valve in response to changes in room temperature.
Date of issuance: April 11, 1990
Effective date: April 11, 1990
Amendment No.: 156
Facility Operating License No. DPR-59: Amendment revised the Technical Specification.
Date of initial notice in **Federal Register:** March 7, 1990 (55 FR 8235) The Commission's related evaluation of the amendment is contained in a Safety Evaluation dated April 11, 1990.
No significant hazards consideration comments received: No
Local Public Document Room location: Penfield Library, State University College of Oswego, Oswego, New York.

Power Authority of the State of New York, Docket No. 50-333, James A. FitzPatrick Nuclear Power Plant, Oswego County, New York

Date of application for amendment: January 9, 1990
Brief description of amendment: This amendment changes the Minimum Critical Power Ratio Safety Limit from the current value of 1.04 to 1.07 for Operating Cycle No. 10.
Date of issuance: April 11, 1990
Effective date: April 11, 1990
Amendment No.: 157
Facility Operating License No. DPR-59: Amendment revised the Technical Specification.
Date of initial notice in **Federal Register:** March 7, 1990 (55 FR 8232) The Commission's related evaluation of the amendment is contained in a Safety Evaluation dated April 11, 1990.
No significant hazards consideration comments received: No
Local Public Document Room location: Penfield Library, State University College of Oswego, Oswego, New York.

Toledo Edison Company and The Cleveland Electric Illuminating Company, Docket No. 50-346, Davis-Besse Nuclear Power Station, Unit No. 1, Ottawa County, Ohio

Date of application for amendment: December 22, 1989
Brief description of amendment: The amendment deleted in its entirety, Table 3.6-2, Containment Isolation Valves, from the Davis-Besse Technical Specifications (TSs) and revised TS Sections 1.8.a.2, 4.6.1.1.a.1, 3.6.3.1, 4.6.3.1.1, 4.6.3.1.2 and Bases Section 3/4.6.3 to reflect this deletion. A new TS Section 4.6.3.1.3 was added to ensure that the surveillance requirements for inservice testing of the containment isolation valves will require verification of the maximum permissible isolation times for power operated or automatic containment isolation valves. The detailed information concerning the containment isolation valves will be established and maintained in the Davis-Besse Updated Safety Analysis Report but the limiting conditions of operation and the surveillance tests requirements will remain in the Davis-Besse TSs.
Date of issuance: April 13, 1990
Effective date: April 13, 1990

Amendment No. 147
Facility Operating License No. NPF-3. Amendment revised the Technical Specifications.
Date of initial notice in Federal Register: February 21, 1990 (55 FR 6121) The Commission's related evaluation of the amendment is contained in a Safety Evaluation dated April 13, 1990.
No significant hazards consideration comments received: No
Local Public Document Room location: University of Toledo Library, Documents Department, 2801 Bancroft Avenue, Toledo, Ohio 43606.

Southern California Edison Company, et al., Docket No. 50-362, San Onofre Nuclear Generating Station, Unit 3, San Diego County, California

Date of application for amendment: February 12, 1990
Brief description of amendment: This amendment revises Surveillance Requirement 4.8.1.1.2.d of Technical Specification 3/4.8.1., "A.C. Sources." The change permits a one time extension during Cycle 4 operation from 24 months to 25 months of the surveillance interval for Surveillance Requirement 4.8.1.1.2.d, which requires certain maintenance and testing activities be performed.
Date of issuance: April 9, 1990
Effective date: April 9, 1990
Amendment No.: 75
Facility Operating License No. NPF-15: Amendment changed the Technical Specifications.
Date of initial notice in Federal Register: March 7, 1990 (55 FR 8237) The Commission's related evaluation of the amendments is contained in a Safety Evaluation dated April 9, 1990.
No significant hazards consideration comments received: No.
Local Public Document Room location: General Library, University of California, P.O. Box 19557, Irvine, California 92713.

Southern California Edison Company, et al., Docket Nos. 50-361 and 50-362, San Onofre Nuclear Generating Station, Unit Nos. 2 and 3, San Diego County, California

Date of application for amendments: October 19, 1989 and supplemented February 9, 1990.
Brief description of amendments: These amendments revise TS 3/4.3.2, "Engineered Safety Features Actuation System Instrumentation," and TS 3/4.3.3.1, "Radiation Monitoring Instrumentation." These amendments remove requirements relating to the iodine/particulate channels of the fuel handling isolation airborne radiation monitors.
Date of issuance: April 12, 1990
Effective date: April 12, 1990
Amendment Nos.: 86 and 76
Facility Operating License Nos. NPF-10 and NPF-15: Amendments changed the Technical Specifications.
Date of initial notice in Federal Register: January 10, 1990 (55 FR 942) The supplemental information contained in the February 9, 1990 letter did not affect the proposed no significant hazards consideration determination . The Commission's related evaluation of the amendments is contained in a Safety Evaluation dated April 12, 1990
No significant hazards consideration comments received: No.
Local Public Document Room location: General Library, University of California, P.O. Box 19557, Irvine, California 92713.

Vermont Yankee Nuclear Power Corporation, Docket No. 50-271, Vermont Yankee Nuclear Power Station, Vernon, Vermont

Date of application for amendment: November 10, 1989
Brief description of amendment: Revise the Pressure-Temperature limit curves in Technical Specification Figure 3.6.1
Date of issuance: April 17, 1990
Effective date: April 17, 1990
Amendment No.: 120
Facility Operating License No. DPR-28: Amendment revised the Technical Specifications.
Date of initial notice in Federal Register: January 24, 1990 (55 FR 2449). The Commission's related evaluation of the amendment is contained in a Safety Evaluation dated April 17, 1990.
No significant hazards consideration comments received: No
Local Public Document Room location: Brooks Memorial Library, 224 Main Street, Brattleboro, Vermont 05301.

Virginia Electric and Power Company, Docket Nos. 50-280 and 50-281, Surry Power Station, Unit Nos. 1 and 2, Surry County, Virginia.

Date of application for amendments: December 11, 1989
Brief description of amendments: These amendments delete Technical Specification 5.3.A.7, which stated that up to 10 grams of enriched fissionable material may be used either in the core or available on site, in the form of fabricated neutron flux detectors, for the purposes of monitoring core neutron flux.
Date of issuance: April 11, 1990
Effective date: April 11, 1990
Amendment Nos.: 138 & 138
Facility Operating License Nos. DPR-32 and DPR-37: Amendments revised the Technical Specifications.
Date of initial notice in Federal Register: March 7, 1990 (55 FR 8238) The Commission's related evaluation of the amendment is contained in a Safety Evaluation dated April 11, 1990.
No significant hazards consideration comments received: No
Local Public Document Room location: Swem Library, College of William and Mary, Williamsburg, Virginia 23185

Virginia Electric and Power Company, Docket No. 50-280, Surry Power Station, Unit No. 1, Surry County, Virginia

Date of application for amendment: January 8, 1990
Brief description of amendment: This amendment modifies Technical Specification 4.17 on a one-time basis to allow deferral of visual and functional inspections of snubbers until the end of Cycle 10, currently projected for October 1990. In the event that the Cycle 10 refueling outage is delayed by more than 2 months beyond the current projection of October 1990, this approval for deferral would become invalid and the licensee would have to seek new approval. This amendment is in partial response to the licensee's request. The balance of the application is still under review.
Date of issuance: April 13, 1990
Effective date: April 13, 1990
Amendment No. 139
Facility Operating License No. DPR-32: Amendment revised the Technical Specifications.
Date of initial notice in Federal Register: February 21, 1990 (55 FR 6124) The Commission's related evaluation of the amendment is contained in a Safety Evaluation dated April 13, 1990.
No significant hazards consideration comments received: No
Local Public Document Room location: Swem Library, College of William and Mary, Williamsburg, Virginia 23185.

Wisconsin Public Service Corporation, Docket No. 50-305, Kewaunee Nuclear Power Plant, Kewaunee County, Wisconsin

Date of application for amendment: April 20, 1989, August 15, 1989, and November 10, 1989 as superseded December 20, 1989.
Brief description of amendment: The amendment addressed organizational changes, corrected typographical errors and inconsistencies, and clarified the intent of certain specifications.
Date of issuance: April 13, 1990

Effective date: April 13, 1990

Amendment No.: 86

Facility Operating License No. DPR-43. Amendment revised the Technical Specifications.

Date of initial notice in **Federal Register:** May 31, 1989 (54 FR 23327) and February 22, 1990 (55 FR 4289) The Commission's related evaluation of the amendment is contained in a Safety Evaluation dated April 13, 1990.

No significant hazards consideration comments received: No.

Local Public Document Room location: University of Wisconsin Library Learning Center, 2420 Nicolet Drive, Green Bay, Wisconsin 54301.

NOTICE OF ISSUANCE OF AMENDMENT TO FACILITY OPERATING LICENSE AND FINAL DETERMINATION OF NO SIGNIFICANT HAZARDS CONSIDERATION AND OPPORTUNITY FOR HEARING (EXIGENT OR EMERGENCY CIRCUMSTANCES)

During the period since publication of the last biweekly notice, the Commission has issued the following amendments. The Commission has determined for each of these amendments that the application for the amendment complies with the standards and requirements of the Atomic Energy Act of 1954, as amended (the Act), and the Commission's rules and regulations. The Commission has made appropriate findings as required by the Act and the Commission's rules and regulations in 10 CFR Chapter I, which are set forth in the license amendment.

Because of exigent or emergency circumstances associated with the date the amendment was needed, there was not time for the Commission to publish, for public comment before issuance, its usual 30-day Notice of Consideration of Issuance of Amendment and Proposed No Significant Hazards Consideration Determination and Opportunity for a Hearing. For exigent circumstances, the Commission has either issued a **Federal Register** notice providing opportunity for public comment or has used local media to provide notice to the public in the area surrounding a licensee's facility of the licensee's application and of the Commission's proposed determination of no significant hazards consideration. The Commission has provided a reasonable opportunity for the public to comment, using its best efforts to make available to the public means of communication for the public to respond quickly, and in the case of telephone comments, the comments have been recorded or transcribed as appropriate and the licensee has been informed of the public comments.

In circumstances where failure to act in a timely way would have resulted, for example, in derating or shutdown of a nuclear power plant or in prevention of either resumption of operation or of increase in power output up to the plant's licensed power level, the Commission may not have had an opportunity to provide for public comment on its no significant hazards determination. In such case, the license amendment has been issued without opportunity for comment. If there has been some time for public comment but less than 30 days, the Commission may provide an opportunity for public comment. If comments have been requested, it is so stated. In either event, the State has been consulted by telephone whenever possible.

Under its regulations, the Commission may issue and make an amendment immediately effective, notwithstanding the pendency before it of a request for a hearing from any person, in advance of the holding and completion of any required hearing, where it has determined that no significant hazards consideration is involved.

The Commission has applied the standards of 10 CFR 50.92 and has made a final determination that the amendment involves no significant hazards consideration. The basis for this determination is contained in the documents related to this action. Accordingly, the amendments have been issued and made effective as indicated.

Unless otherwise indicated, the Commission has determined that these amendments satisfy the criteria for categorical exclusion in accordance with 10 CFR 51.22. Therefore, pursuant to 10 CFR 51.22(b), no environmental impact statement or environmental assessment need be prepared for these amendments. If the Commission has prepared an environmental assessment under the special circumstances provision in 10 CFR 51.12(b) and has made a determination based on that assessment, it is so indicated.

For further details with respect to the action see (1) the application for amendment, (2) the amendment to Facility Operating License, and (3) the Commission's related letter, Safety Evaluation and/or Environmental Assessment, as indicated. All of these items are available for public inspection at the Commission's Public Document Room, the Gelman Building, 2120 L Street, NW., Washington, DC, and at the local public document room for the particular facility involved.

A copy of items (2) and (3) may be obtained upon request addressed to the U.S. Nuclear Regulatory Commission, Washington, DC 20555, Attention: Director, Division of Reactor Projects.

The Commission is also offering an opportunity for a hearing with respect to the issuance of the amendments. By June 1, 1990, the licensee may file a request for a hearing with respect to issuance of the amendment to the subject facility operating license and any person whose interest may be affected by this proceeding and who wishes to participate as a party in the proceeding must file a written petition for leave to intervene. Requests for a hearing and petitions for leave to intervene shall be filed in accordance with the Commission's "Rules of Practice for Domestic Licensing Proceedings" in 10 CFR Part 2. If a request for a hearing or petition for leave to intervene is filed by the above date, the Commission or an Atomic Safety and Licensing Board, designated by the Commission or by the Chairman of the Atomic Safety and Licensing Board Panel, will rule on the request and/or petition and the Secretary or the designated Atomic Safety and Licensing Board will issue a notice of hearing or an appropriate order.

As required by 10 CFR 2.714, a petition for leave to intervene shall set forth with particularity the interest of the petitioner in the proceeding and how that interest may be affected by the results of the proceeding. The petition should specifically explain the reasons why intervention should be permitted with particular reference to the following factors: (1) the nature of the petitioner's right under the Act to be made a party to the proceeding; (2) the nature and extent of the petitioner's property, financial, or other interest in the proceeding; and (3) the possible effect of any order which may be entered in the proceeding on the petitioner's interest. The petition should also identify the specific aspect(s) of the subject matter of the proceeding as to which petitioner wishes to intervene. Any person who has filed a petition for leave to intervene or who has been admitted as a party may amend the petition without requesting leave of the Board up to fifteen (15) days prior to the first prehearing conference scheduled in the proceeding, but such an amended petition must satisfy the specificity requirements described above. Interested persons should consult a current copy of 10 CFR 2.714 which is available at the Commission's Public Document Room, the Gelman Building, 2120 L Street, NW., Washington, DC 20555 and at the Local Public Document Room for the particular facility involved.

Not later than fifteen (15) days prior to the first prehearing conference scheduled in the proceeding, a petitioner shall file a supplement to the petition to intervene which must include a list of the contentions which are sought to be litigated in the matter. Each contention must consist of a specific statement of the issue of law or fact to be raised or controverted. In addition, the petitioner shall provide a brief explanation of the bases of the contention and a concise statement of the alleged facts or expert opinion which support the contention and on which the petitioner intends to rely in proving the contention at the hearing. The petitioner must also provide references to those specific sources and documents of which the petitioner is aware and on which the petitioner intends to rely to establish those facts or expert opinion. Petitioner must provide sufficient information to show that a genuine dispute exists with the applicant on a material issue of law or fact. Contentions shall be limited to matters within the scope of the amendments under consideration. The contention must be one which, if proven, would entitle the petitioner to relief. A petitioner who fails to file such a supplement which satisfies these requirements with respect to at least one contention will not be permitted to participate as a party.

Those permitted to intervene become parties to the proceeding, subject to any limitations in the order granting leave to intervene, and have the opportunity to participate fully in the conduct of the hearing, including the opportunity to present evidence and cross-examine witnesses.

Since the Commission has made a final determination that the amendment involves no significant hazards consideration, if a hearing is requested, it will not stay the effectiveness of the amendment. Any hearing held would take place while the amendment is in effect.

A request for a hearing or a petition for leave to intervene must be filed with the Secretary of the Commission, U.S. Nuclear Regulatory Commission, Washington, DC 20555, Attention: Docketing and Services Branch, or may be delivered to the Commission's Public Document Room, the Gelman Building, 2120 L Street, NW., Washington, DC, by the above date. Where petitions are filed during the last ten (10) days of the notice period, it is requested that the petitioner promptly so inform the Commission by a toll-free telephone call to Western Union at 1-(800) 325-6000 (in Missouri 1-(800) 342-6700). The Western Union operator should be given Datagram Identification Number 3737 and the following message addressed to (*Project Director*): petitioner's name and telephone number; date petition was mailed; plant name; and publication date and page number of this **Federal Register** notice. A copy of the petition should also be sent to the Office of the General Counsel, U.S. Nuclear Regulatory Commission, Washington, DC 20555, and to the attorney for the licensee.

Nontimely filings of petitions for leave to intervene, amended petitions, supplemental petitions and/or requests for hearing will not be entertained absent a determination by the Commission, the presiding officer or the Atomic Safety and Licensing Board, that the petition and/or request should be granted based upon a balancing of the factors specified in 10 CFR 2.714(a)(1)(i)-(v) and 2.714(d).

Boston Edison Company, Docket No. 50-293, Pilgrim Nuclear Power Station, Plymouth County, Massachusetts

Date of application for amendment: April 2, 1990 as supplemented on April 5, 1990

Brief Description of amendment: The amendment revises the Technical Specifications to correct the setpoint for the Average Power Range Monitor upscale control rod block in the startup and refuel modes. It also revises surveillance requirements and limiting conditions for operation for the maximum fraction of limiting power density.

Date of issuance: April 18, 1990

Effective date: April 18, 1990

Amendment No.: 129

Facility Operating License No. DPR-35: Amendment revised the Technical Specifications.

Date of initial notice in **Federal Register:** April 9, 1990 (55 FR 13202). The Commission's related evaluation of the amendment, finding of exigent circumstances, consultation with the State of Massachusetts, and final determination of no significant hazards consideration are contained in a Safety Evaluation dated April 18, 1990.

No significant hazards consideration comments received: No

Attorney for licensee: W. S. Stowe, Boston Edison Company, 800 Boylston Street, 36th Floor, Boston, Massachusetts 02199.

Local Public Document Room: Plymouth Library, 11 North Street, Plymouth, Massachusetts 02360.

NRC Project Director: Richard H. Wessman

Dated at Rockville, Maryland, this 25th day of April 1990.

For the Nuclear Regulatory Commission

Gary M. Holahan,

Acting Director, Division of Reactor Projects - III, IV, V and Special Projects Office of Nuclear Reactor Regulation

[Doc. 90-10081 Filed 5-1-90; 8:45 am]

BILLING CODE 7590-01-D

[Docket No. 72-4 (50-269/270/287)]

Duke Power Co., Oconee Nuclear Station, Independent Spent Fuel Storage Installation; Exemption

I.

Duke Power Company (Duke or the licensee) hold materials license (SNM-2503) for receipt and storage of spent fuel from its Oconee Nuclear Station at an independent spent fuel storage installation (ISFSI) located on the Oconee Nuclear Station site.

Section 72.82(e) of 10 CFR part 72 requires each licensee to provide a report of preoperational test acceptance criteria and test results to the Nuclear Regulatory Commission (NRC) Region II with a copy to Director, Office of Nuclear Material Safety and Safeguards, at least 30 days prior to receipt of spend fuel or high level radioactive waste.

II.

By letter dated March 30, 1990, the licensee requested a schedular exemption pursuant to 10 CFR 72.7 from the requirements of 10 CFR 72.82(e). The licensee commits to submit its report no less than 3 days prior to receipt of spent fuel planned to occur on June 11, 1990, at its Oconee ISFSI.

The licensee stated in its March 30, 1990, request that the projected spent fuel storage requirement of Oconee will necessitate operation of the ISFSI to avoid loss of the Prudent Operating Reserve in its Unit 1 and 2 spent fuel pool. Subsequent to completion of Oconee Unit 1's refueling outage on approximately June 4, 1990, the licensee notes that its Prudent Operating Reserve for the Unit 1 and 2 spend fuel pool will be lost with an excess of 72 fuel assemblies in the pool. This situation would prevent full core offload from either Unit 1 or 2 unless the 72 assemblies were transferred to the Unit 3 pool. This transfer activity would, the licensee states, significantly add to refueling time. Moreover, transfer of the 72 assemblies to the Unit 3 pool would result in occupational dose.

III

In October 1988, the NRC staff issued an Environmental Assessment Related to the Construction and Operation of the

Oconee Nuclear Station Indpendent Spent Fuel Storage Installation and Finding of No Significant Impact (53 FR 44133). The ISFSI is located within the Owner controlled Area at the Oconee Nuclear Station which is licensed under 10 CFR part 50. As such, the radiological impacts from spent fuel loading and operation of the ISFSI fall within the scope of impacts evaluated for licensed reactor operations and are controlled by the existing Oconee Nuclear Station Technical Specifications and the technical specification for the ISFSI. There are no radiological impacts due to postulated accidents from spent fuel handling and transfer or operation of the ISFSI during the proposed exemption period. All impacts of the operational testing fall within the allowable limits specified in applicable regulations and are bounded by the conclusions of the October 1988 Environmental Assessment. A delayed submittal of the preoperational test report has no environmental impact. Thus, the health and safety of the public are not affected by this exemption request.

The proposed exemption from 10 CFR 72.82(e) will not increase the probability or consequences of accidents, no changes are being made in the types of any effluents that may be released offsite, and there is no significant cumulative radiation exposure. Accordingly, the NRC staff concludes that the proposed exemption would result in no significant radiological environmental impact. Additionally, it does not affect non-radiological plant effluents and has no other environmental impact. Therefore, the staff concludes that there are no significant non-radiological environmental impacts associated with the exemption.

IV

Accordingly, the Commission in accordance with 10 CFR 72.7 has determined that the exemption is authorized by law, will not present an undue risk to the public health and safety, and is consistent with the common defense and security.

Accordingly, the Commission hereby grants the licensee a permanent exemption from the requirements of 10 CFR 72.82(e) as requested by the licensee's letter of March 30, 1990.

Pursuant to 10 CFR 51.22(c)(10) the Commission has determined that the granting of this exemption is identified as an action eligible to categorical exclusion from the requirement of 10 CFR part 51.

This exemption is affective upon issuance.

Dated at Rockville, Maryland, this 26th day of April, 1990.

For the Nuclear Regulatory Commission.

Richard E. Cunningham,

Director, Division of Industrial and Medical Nuclear Safety, Office of Nuclear Material Safety and Safeguards.

[FR Doc. 90-10170 Filed 5-1-90; 8:45 am]

BILLING CODE 7510-01-M

[Docket No. 50-322]

Applications, Hearings, Determinations, etc.; Long Island Lighting Co. (Shoreham Nuclear Power Station, Unit 1); Exemption

I

Long Island Lighting Company (the licensee) is the holder of Facility Operating License No. NPR-82, which authorizes full power operation of the Shoreham Nuclear Power Station (SNPS). The facility is a boiling water reactor, currently shutdown and dufueled, located at the licensee's site in Suffolk County, New York. The license provides, among other things, that the licensee is subject to all rules, regulations and orders of the Commission now or hereafter in effect.

II

By letter dated December 5, 1989, the licensee requested an exemption from the requirements of 10 CFR 50.71(e)(4) related to the annual update of its safety analysis report. In addition, the licensee seeks to extend the time prior to such submittal for inclusion of all changes.

Pursuant to 10 CFR 50.71(e)(4) each commercial power reactor licensee is required to file an annual update of its final safety analysis report (FSAR). Such annual updates shall include all changes up to 6 months prior to the date of filing. The licensee seeks a delay in filing the required annual update. The licensee's exemption request also seeks to extend the time prior to the date of filing for including all changes.

III

Prior to this exemption request, the licensee had submitted an original Updated Safety Analysis Report (USAR) and two revisions. By letter dated December 5, 1989, the licensee requests an exemption to delay submittal of Revision 3 to the USAR, due December 7, 1989, to June 1, 1990. In addition, Revision 3 would contain all changes as of June 28, 1989, the date the Settlement Agreement between LILCO and New York State became legally effective.

The licensee states that the requirement to fully comply with the regulation is, under ordinary circumstances, a time consuming task requiring intensive effort on the part of plant personnel. In light of the Settlement Agreement with New York State, the licensee adds, it is not only responsible for meeting all obligations under the operating license and attendant NRC regulations, but is engaged in preparing a Defueled Safety Analysis Report (DSAR) and various other technical and regulatory documents to support future license amendment and exemption requests. These tasks are being performed concurrently with the preparation of an application to transfer Shoreham's operating license to an entity of New York State. As a consequence, licensee's personnel that normally would be available to work exclusively on the annual USAR update are also spending considerable time and effort preparing the DSAR and other related documents.

In its letter requesting the subject schedular exemption, the licensee states that it is preparing the Defueled Safety Analysis Report for submittal to the NRC prior to June 1, 1990. The DSAR will describe the level of activity needed to protect the public health and safety, consistent with Shoreham being in a shutdown and defueled condition. The licensee also believes that "* * * submission of the DSAR will better serve the regulation's (10 CFR 50.71(e)(4)) stated purpose of providing a 'reference document for recurring safety analyses performed by the * * * licensee and the Commission.'" The licensee adds that, apart from changes associated with defueling, no significant alterations have been made to the plant since the last USAR update. Specifically, a preliminary review by LILCO indicates that the update for which it seeks this schedular exemption (USAR Revision 3) will contain less than 40 changes, all of which are relatively minor. In addition, the licensee adds that its submission of the DSAR will provide the staff with the most pertinent information regarding Shoreham in its defueled condition. The staff concurs in the licensee's preliminary review, and agrees that the DSAR will provide more useful and timely information on Shoreham's defueled condition. The staff therefore finds that granting this current exemption presents no undue safety risk.

IV

The NRC may grant exemptions from the requirements of the regulations that, pursuant to 10 CFR 50.12(a), are (1) authorized by law, will not present an undue risk to the public health and safety, and are consistent with the

common defense and security, and (2) present special circumstances.

The staff has reviewed the licensee's request for this schedular exemption and finds that the exemption will not present an undue risk to the public health and safety, and is consistent with the common defense and security. Further, the licensee has shown special circumstances as described in the staff's safety evaluation in support of this schedular exemption.

Pursuant to 10 CFR 51.32, the Commission has determined that the issuance of this schedular exemption will have no significant impact on the human environment (55 FR 17511).

Accordingly, the Commission has determined that pursuant to 10 CFR 50.12(a)(1), the exemption is authorized by law, will not present an undue risk to the public health and safety, and is consistent with the common defense and security. As indicated above, compliance with 10 CFR 50.71(e)(4) at this time represents a less than appropriate ordering of priorities and an imprudent allocation of resources. Further, LILCO does not seek to be excused entirely from the requirement that it submit Revision 3 to the Shoreham USAR. Rather, LILCO requests only temporary relief, in the form of an extension of time to file, until June 1, 1990. Thus, a special circumstance as described in § 50.12(a)(2)(v) exists to support this exemption, as determined by the Commission. Therefore, the Commission hereby approves the following exemption:

The licensee is exempt from filing Revision 3 to the Shoreham Updated Safety Analysis Report until June 1, 1990. Further, Revision 3 to the USAR will contain all changes as of June 28, 1989, the date the Settlement Agreement between LILCO and New York State became legally effective.

The licensee's letter, dated December 5, 1989, and the NRC staff's letter and Safety Evaluation, dated April 25, 1990, related to this action are available for public inspection at the NRC Public Document Room, the Gelman Building, 2120 L Street NW., Washington, DC and the Shoreham-Wading River Public Library, Route 25A, Shoreham, New York 11786.

The exemption is effective upon issuance.

Dated at Rockville, Maryland this 25th day of April 1990.

For the Nuclear Regulatory Commission

Steven A. Varga,

Director, Division of Reactor Projects I/II, Office of Nuclear Reactor Regulation.

[FR Doc. 90–10168 Filed 5–1–90; 8:45 am]

BILLING CODE 4130–01–M

[Docket No. 50–482]

Wolf Creek Nuclear Operating Corp.; Withdrawal of Application for Amendment to Facility Operating License

The United States Nuclear Regulatory Commission (the Commission) has granted the request of the Wolf Creek Nuclear Operating Corporation (the licensee) to withdraw its February 8, 1990, application for proposed amendment to Facility Operating License No. NPF–42 for the Wolf Creek Generating Station located in Coffey County, Kansas.

The proposed amendment would have made changes to the Wolf Creek Generating Station (WCGS) Physical Security Plan to modify section 9.3.1.a.(1) to require the submittal of fingerprint cards to the NRC in accordance with 10 CFR 73.57 in lieu of the currently stipulated criminal records check as one of the criteria used to establish the acceptability of granting interim (i.e. temporary) unescorted access to WCGS. Additionally, a requirement was proposed that stated that criminal history resulting from the FBI check must be considered immediately after receipt in conjunction with other evaluation criteria to determine if unescorted access should be continued or terminated.

The Commission issued a Notice of Consideration of Issuance of Amendment published in the **Federal Register** on February 21, 1990 (55 FR 6128). By letter dated March 8, 1990, the licensee withdrew the proposed amendment.

For further details with respect to this action, see the application for amendment dated February 8, 1990, and the licensee's letter dated March 8, 1990, withdrawing the application for license amendment. The above documents are available for public inspection at the Commission's Public Document Room, 2120 L Street, NW. Washington, DC and at the local public document rooms located at Emporia State University, William Allen White Library, 1200 Commercial Street, Emporia, Kansas 66801 and Washburn University School of Law Library, Topeka, Kansas 66621.

Dated at Rockville, Maryland this 17th day of April 1990.

For the Nuclear Regulatory Commission.

Frederick J. Hebdon,

Director, Project Directorate IV, Division of Reactor Projects-III, IV, V, and Special Projects, Office of Nuclear Reactor Regulation.

[FR Doc. 90–10169 Filed 5–1–90; 8:45 am]

BILLING CODE 7590–01–M

SECURITIES AND EXCHANGE COMMISSION

[Release No. 34–27947; File No. SR–NASD–90–13]

Self-Regulatory Organizations; National Association of Securities Dealers, Inc.; Order Approving Proposed Rule Change Relating to Notification by NASDAQ Issuers of Changes in Business or Address

The National Association of Securities Dealers, Inc. ("NASD" or "Association") submitted on March 8, 1990, to the Securities and Exchange Commission ("SEC or "Commission") a proposed rule change pursuant to section 19(b) of the Securities Exchange Act of 1934 ("Act") [1] and Rule 19b–4 thereunder.[2] The proposal amends the NASD's Schedule to the Bylaws [3] to require that NASDAQ issuers promptly notify the NASD in writing of any change in the nature of its business of any change of address of its principal place of business.

In amending Schedule D of its Bylaws, the NASD is requiring NASDQ issuers to notify the NASD when they have moved their principal place of business or changed the general character of their business. The NASD believes that failure of issuers to promptly provide such information impedes its efforts to perform its regulatory functions. It is the objective of the proposal to aid the NASD in discharging its regulatory responsibilities in an efficient and expeditious manner.

Notice of the proposed rule change together with the terms of substance of the proposal was provided by the issuance of a Commission release (Securities Exchange Act Release No. 27791, March 12, 1990) and by publication in the **Federal Register** (55 FR 10128, March 19, 1990). No comments were received with respect to the proposed rule change.

The Commission finds that the proposed rule change is consistent with the requirements of the Act and the rules and regulations thereunder applicable to the Association and, in particular, the requirements of section 15A [4] and the rules and regulations thereunder.

It is Therefore Ordered, pursuant to Section 19(b)(2) of the Act, that the above-mentioned proposed rule change be, and hereby is, approved.

---

[1] 15 U.S.C. 78s(b)(1) (1982).

[2] 17 CFR 240.19b–4 (1989).

[3] *NASD Manual, Schedule to the Bylaws, Schedule D, par. 1803, 1804.*

[4] 15 U.S.C. 78*o*–3 (1982).

For the Commission, by the Division of Market Regulation pursuant to delegated authority.[5]

Dated: April 26, 1990.

Jonathan G. Katz,

Secretary.

[FR Doc. 90-10192 Filed 5-1-90; 8:45 am]

BILLING CODE 8010-01-M

DEPARTMENT OF TRANSPORTATION

Applications for Certificates of Public Convenience and Necessity and Foreign Air Carrier Permits Filed Under Subpart Q During the Week Ended April 20, 1990

The following applications for certificates of public convenience and necessity and foreign air carrier permits were filed under subpart Q of the Department of Transportation's Procedural Regulations (See 14 CFR 302.1701 et. seq.). The due date for answers, conforming applications, or motion to modify scope are set forth below each application. Following the answer period DOT may process the application by expedited procedures. Such procedures may consist of the adoption of a show-cause order, a tentative order, or in appropriate cases a final order without further proceedings.

Docket Number: 46899.

Date filed: April 16, 1990.

Due Date for Answers, Conforming Applications, or Motion to Modify Scope: May 14, 1990.

Description: Application of Belize Trans Air Limited, pursuant to section 402 of the Act and subpart Q of the Regulations, applies for a foreign air carrier permit to engage in scheduled and charter foreign air transportation of persons, property and mail between Belize city, Belize, Central America, on the one hand, and Miami, Florida, on the other hand.

Docket Number: 46907.

Date filed: April 20, 1990.

Due Date for Answers, Conforming Applications, or Motion to Modify Scope: May 18, 1990.

Description: Application of Air Nova Inc., pursuant to section 402 of the Act and subpart Q of the Regulations applies for a foreign air carrier permit authorizing charter foreign air passenger and other transportation between Canada and United States points using large aircraft and subject to Canada-U.S. 1974 Non-Scheduled Air Services Agreement.

Docket Number: 46105.

Date filed: April 18, 1990.

Due Date for Answers, Conforming Applications, or Motion to Modify Scope: May 16, 1990.

Description: Amendment No. 1 to the Application of Arrow Air, Inc., for a certificate of public convenience and necessity, hereby amends the opening paragraph of the original application to read as follows:

Arrow Air, Inc. (Arrow) hereby applies for a new or amended certificate of public convenience and necessity to engage in scheduled foreign air transportation of property and mail between any point or points in the United States and its territories and possessions, on the one hand, and points or points in Argentina, Bolivia, Chile, Colombia, Costa Rica, Iceland, Paraguay, Uruguay, and Venezuela.

Phyllis T. Kaylor,

Chief, Documentary Services Division.

[FR Doc. 90-10149 Filed 5-1-90; 8:45 am]

BILLING CODE 4910-62-M

Federal Aviation Administration

Administrator's Decisions and Orders in Civil Penalty Actions; Availability

AGENCY: Federal Aviation Administration (FAA), DOT.

ACTION: Notice of public availability.

SUMMARY: This notice announces the public availability of decisions in civil penalty cases issued by the Administrator of the Federal Aviation Administration. Because the Administrator's decisions in individual adjudications may be cited as precedent in subsequent civil penalty cases, it is necessary that interested persons be informed of how and where these decisions may be reviewed and copied. This notice is intended to increase public awareness of the availability of these final agency decisions.

FOR FURTHER INFORMATION CONTACT: James S. Dillman, Assistant Chief Counsel for Litigation (AGC-400), Federal Aviation Administration, 800 Independence Avenue SW., Washington, DC 20591; telephone (202) 267-3661.

SUPPLEMENTARY INFORMATION: In section 905 of the Federal Aviation Act (the Airway and Airport Safety and Capacity Expansion Act of 1987; Public Law 100-223), Congress authorized the Administrator of the Federal Aviation Administration (FAA) to assess civil penalties not to exceed $50,000 for violations of the Federal Aviation Act, or a rule, regulation, or order issued thereunder, after written notice and finding of violation by the Administrator. 49 U.S.C. app. 1475. Under the rules of practice governing hearings and appeals of civil penalty actions (14 CFR part 13, subpart G), the Administrator, or his delegate, is designated as the FAA decisionmaker to review and decide appeals of initial decisions issued by administrative law judges who hold adjudicatory hearings in these civil penalty actions. The Administrator, as the decisionmaker, issues the final decisions and orders of the agency in those cases.

Congress expanded the Administrator's authority to initiate and assess civil penalties, not to exceed $50,000, in the case of aircraft registration and recordation violations related to drug trafficking in the Federal Aviation Administration Drug Enforcement Assistance Act of 1988 (Public Law 100-690). This civil penalty assessment authority is identical to the authority under section 905 except that it is permanent. 49 U.S.C. 1471(a)(3). In addition, the Administrator is authorized to initiate and assess civil penalties, regardless of amount, for violations of the Hazardous Materials Transportation Act. 49 U.S.C. 1809. This assessment authority is also permanent.

Under the Administrative Procedure Act, Federal agencies are required to make available for public inspection and copying, or publish and offer for sale, certain specified materials, including all "final opinions and orders made in the adjudication of cases." 5 U.S.C. 552(a)(2)(A). The Administrative Procedure Act also requires Federal agencies to maintain and make available for public inspection and copying, and to publish at least quarterly, current indexes that contain identifying information as to those materials required to be made available or published. *Id.*

In accordance with the requirement of the Administrative Procedure Act that these decisions and orders either be made available for public inspection and copying, or promptly published and made available for sale, the FAA has made available for public inspection and copying all final decisions and orders issued by the Administrator, or his delegate, in the agency's adjudication of civil penalty cases. These materials are available for public inspection and copying in FAA headquarters: FAA Hearing Docket, Federal Aviation Administration, 800 Independence Avenue, SW., room 924A, Washington, DC 20591; (202) 267-3636.

In addition, these materials are available at all FAA regional and center legal offices at the following locations: Office of the Assistant Chief Counsel for the Aeronautical Center (AAC-7),

[5] 17 CFR 200.30-3(a)(12).

Mike Monroney Aeronautical Center, 6500 South MacArthur, Oklahoma City, OK 73125; (405) 680–3296

Office of the Assistant Chief Counsel for the Alaskan Region (AAL–7), Alaskan Region Headquarters, 222 West 7th Avenue, Anchorage, AL 99513; (907) 271–5269

Office of the Assistant Chief Counsel for the Central Region (ACE–7), Central Region Headquarters, 601 East 12th Street, Federal Building, Kansas City, MO 64106; (816) 426–5446

Office of the Assistant Chief Counsel for the Eastern Region (AEA–7), Eastern Region Headquarters, JFK International Airport, Fitzgerald Federal Building, Jamaica, NY 11430; (718) 917–1035

Office of the Assistant Chief Counsel for the Great Lakes Region (AGL–7), Great Lakes Region Headquarters, O'Hare Lake Office Center, 2300 East Devon Avenue, Des Plaines, IL 60018; (312) 694–7108

Office of the Assistant Chief Counsel for the New England Region (ANE–7), New England Region Headquarters, 12 New England Executive Park, Burlington, MA 01803; (617) 273–7305

Office of the Assistant Chief Counsel for the Northwest Mountain Region (ANM–7), Northwest Mountain Region Headquarters, 18000 Pacific Highway South, Seattle, WA 89188; (206) 431–2007

Office of the Assistant Chief Counsel for the Southern Region (ASO–7), Southern Region Headquarters, 3400 Norman Berry Drive, East Point, GA 30344; (404) 765–7204

Office of the Assistant Chief Counsel for the Southwest Region (ASW–7), Southwest Region Headquarters, 4400 Blue Mound Road, Fort Worth, TX 76193; (817) 624–5707

Office of the Assistant Chief Counsel for the Technical Center (ACT–7), Federal Aviation Administration Technical Center, Atlantic City International Airport, Atlantic City, NJ 08405; (609) 484–6605

Office of the Assistant Chief Counsel for the Western–Pacific Region (AWP–7), Western-Pacific Region Headquarters, 15000 Aviation Boulevard, Hawthorne, CA 90261; (213) 297-1270

The FAA currently is considering various means by which the Administrator's decisions and orders could be published and offered for sale, such as by subscription through either a public or private reporting service. The FAA will provide further public notice of such publication and sale when such arrangements are complete. In addition, the FAA will maintain, and will make available, an index of those decisions, organized both chronologically and alphabetically, that will provide identifying information about those decisions. A notice announcing the availability of that index will be published in the Federal Register.

Issued in Washington, DC on April 26, 1990.

Gregory S. Walden,

Chief Counsel.

[FR Doc. 90–10191 Filed 5–1–90; 8:45 am]

BILLING CODE 4910–13–M

Environmental Impact Statement, Runway 14 Improvements and ILS Installation, Anchorage International Airport, Anchorage, AK

AGENCY: Federal Aviation Administration (FAA), DOT.

ACTION: Notice of intent.

SUMMARY: The Federal Aviation Administration intends to prepare an Environmental Impact Statement (EIS) to address the impacts of improvements to the runway environment adjacent to Runway 14/32 and the installation of an Instrument Landing System (ILS) for Runway 14 at Anchorage International Airport.

FOR FURTHER INFORMATION CONTACT: Mr. Bob Bransky at (907) 271–5351 or write to the address listed below.

SUPPLEMENTARY INFORMATION: The proposed action would include installation of an ILS with approach lighting system, modifications to the runway to accommodate the systems, and earth-moving activities to create a safer runway environment. Minor modifications would be made to existing airspace use. Principal alternatives to the proposed action are installation of the ILS on another runway and the No Action alternative.

The FAA discontinued preparation of an Environmental Assessment for the proposed action in response to public and governmental agency comments that the action would cause significant impacts. Public meetings will be held in Anchorage to fully involve the public and interested agencies in the EIS scoping process. Direct coordination also will be maintained with all interested agencies. Times and locations of public meetings will be advertised. All interested parties are invited to submit comments about the proposed action and about the scope of the EIS. Written comments should be made within 60 days of this notice and should be addressed to: Mr. Bob Bransky, Manager, Establishment Branch, AAL–450, Federal Aviation Administration, 222 West Seventh Avenue #14, Anchorage, Alaska 99513–7587, Reference: Anchorage Rwy 14 EIS.

Robert J. Bransky,

Manager, Establishment Branch, AAL–450.

[FR Doc. 90–10190 Filed 5–1–90; 8:45 am]

BILLING CODE 4910–13–M

Research and Special Programs Administration

Compliance with Federal Requirements for Reporting Releases and Transporting Hazardous Materials; Joint Workshop With the Environmental Protection Agency

AGENCY: Research and Special Programs Administration (RSPA), DOT.

ACTION: Notice of jointly sponsored workshop.

SUMMARY: This notice advises interested persons that DOT and the Environmental Protection Agency (EPA) will jointly sponsor a workshop on complying with federal requirements for reporting releases of hazardous substances and transporting hazardous materials.

DATES: DOT/EPA Workshop—A one-day workshop will be held on June 19, 1990, 7:30 a.m.–5 p.m., at the San Diego Convention Center, San Diego, CA. Attendance is limited, so please register early. Those who do not register in advance will be able to attend only on a space available basis. This workshop is being offered free of charge and is open to anyone who wants to attend.

FOR FURTHER INFORMATION CONTACT: Deborah Boothe, Research and Special Programs Administration (DHM–51), 400 Seventh Street SW., Washington, DC 20590: (202) 366–2229, or Pamela Harris, Environmental Protection Agency, OS–210, 401 M Street SW., Washington, DC 20460; (202) 475–9815.

SUPPLEMENTARY INFORMATION: This workshop will provide practical information to assist regulated firms in complying with release reporting and transportation requirements. Specifically the workshop will address:

- What is required to report releases of hazardous substances.
- What substances are subject to reporting requirements.
- What kinds of releases must be reported.
- What exemptions from reporting requirements are provided.
- What kinds of report-related information will be requested.
- What penalties may be assessed for failure to report releases.
- How to properly classify hazardous materials for transportation.

• How to properly package, label and prepare shipping papers for transporting hazardous materials.

• What mechanisms exist for enforcement of violations of the transportation requirements.

• How to comply with hazardous waste manifest requirements.

• What is the Hazardous Materials Information Exchange (HMIX) and how to use it.

• What are the EPA and OSHA worker protection standards.

Issued in Washington, DC on April 27, 1990, under authority delegated in 49 CFR part 106, Appendix A.

Alan I. Roberts,

Director, Office of Hazardous Materials Transportation.

[FR Doc. 90-10193 Filed 5-1-90; 8:45 am]

BILLING CODE 4910-60-M

DEPARTMENT OF THE TREASURY

Public Information Collection Requirements Submitted to OMB for Review

Date: April 26, 1990.

The Department of Treasury has submitted the following public information collection requirement(s) to OMB for review and clearance under the Paperwork Reduction Act of 1980, Public Law 96-511. Copies of the submission(s) may be obtained by calling the Treasury Bureau Clearance Officer listed. Comments regarding this information collection should be addressed to the OMB reviewer listed and to the Treasury Department Clearance Officer, Department of the Treasury, room 2224, 1500 Pennsylvania Avenue, NW., Washington, DC 20220.

Bureau of Alcohol, Tobacco and Firearms

OMB Number: 1512-1512-0167.

Form Number: AFT F 3072 (5210.14).

Type of Review: Revision.

Title: Transportation in Bond and Notice of Release of Puerto Rican Tobacco Products, Cigarette Papers and Tubes.

Description: ATF F 3072 (5210.14) is used to document the shipment of taxable tobacco products brought into the United States in bond from Puerto Rico. The form documents certification by ATF to account for the tax liability as well as any adjustments assessed to the bonded licensee. The form also describes the shipments and identification of licensee who receives the products.

Respondents: Business or other for-profits, Small businesses or organizations.

Estimated Number of Respondents: 90.

Estimated Number of Hours Per Response: 12 minutes.

Frequency of Response: On occasion.

Estimated Total Reporting Burden: 200 hours.

OMB Number: 1512-0493.

Form Number: AFT F 5300.3.

Type of Review: Extension.

Title: Letterhead Request for Information in Regard to Federal Firearms Dealer's Records (Dealer's Records of Acquisition, Disposition and Supporting Data).

Description: This letter form gives the user a simplified form to list required information ATF needs to perform its functions. It saves time for the respondent because the questions are simple, a return address is given. The information is used to maintain a current status of licensee information.

Respondents: Individuals or households, Businesses or other for-profit, Small businesses or organizations.

Estimated Number of Respondents: 28,000.

Estimated Number of Hours Per Response: 5 minutes.

Frequency of Response: On occasion.

Estimated Total Reporting Burden: 2,380 hours.

Clearance Officer: Robert Masarsky (202) 566-7077, Bureau of Alcohol, Tobacco and Firearms, room 7011, 1200 Pennsylvania Avenue, NW., Washington, DC 20226.

OMB Reviewer: Milo Sunderhauf (202) 395-6880, Office of Management and budget, room 3001, New Executive Office Building, Washington, DC 20503.

Lois K. Holland,

Departmental Reports, Management Officer.

[FR Doc. 90-10143 Filed 5-1-90; 8:45 am]

BILLING CODE 4810-31-M

Public Information Collection Requirements Submitted to OMB for Review

Date: April 26, 1990.

The Department of Treasury has submitted the following public information collection requirement(s) to OMB for review and clearance under the Paperwork Reduction Act of 1980, Public Law 96-511. Copies of the submission(s) may be obtained by calling the Treasury Bureau Clearance Officer listed. Comments regarding this information collection should be addressed to the OMB reviewer listed and to the Treasury Department Clearance Officer, Department of the Treasury, room 2224, 1500 Pennsylvania Avenue, NW., Washington, DC 20220.

Internal Revenue Service

OMB Number: 1545-0863.

Form Number: None.

Type of Review: Extension.

Title: Product Liability Losses and Accumulations for Product Liability Losses.

Description: Generally, a taxpayer who sustains a product liability loss must carry that back 10 years. However, a taxpayer may elect to have such loss treated as a regular net operating loss under section 172. If desired, such election is made by attaching a statement to the tax return. This statement will enable the IRS to monitor compliance with the statutory requirements.

Respondents: Businesses or other for-profit.

Estimated Number of Respondents: 5,000.

Estimated Burden Hours Per Response: 30 minutes.

Frequency of Response: On occasion.

Estimated Total of Reporting Burden: 2,500 hours.

OMB Number: 1545-1135.

Form Number: 8817.

Type of Review: Extension.

Title: Allocation of Patronage and Nonpatronage Income and Deductions.

Description: Form 8817 is used by taxable Farmer Cooperatives to indicate their income and deductions by patronage and nonpatronage source. IRS uses this information to improve the classification of returns for examinations, and to enhance taxpayer compliance.

Respondents: Farms, Businesses or other for-profit.

Estimated Number of Respondents: 1,650.

Estimated Burden Hours Per Response/Recordkeeping:

Recordkeeping; 17 hours, 2 minutes.
Learning about the law or the form; 30 minutes.
Preparing, copying, assembling, and sending the form to IRS; 48 minutes.

Frequency of Response: Annually.

Estimated Total Recordkeeping/ Reporting Burden: 22,726 hours.

Clearance Officer: Garrick Shear (202) 535-4297, Internal Revenue Service, room 5571, 1111 Constitution Avenue, NW., Washington, DC 20224.

OMB Reviewer: Milo Sunderhauf (202) 395-6880, Office of Management and Budget, room 3001, New Executive Office Building, Washington, DC 20503.

Lois K. Holland,

Departmental Reports, Management Officer.

[FR Doc. 90-10144 Filed 5-1-90; 8:45 am]

BILLING CODE 4830-01-M

Public Information Collection Requirements Submitted to OMB for Review

Date: April 26, 1990.

The Department of Treasury has submitted the following public information collection requirement(s) to OMB for review and clearance under the Paperwork Reduction Act of 1980, Public Law 96–511. Copies of the submission(s) may be obtained by calling the Treasury Bureau Clearance Officer listed. Comments regarding this information collection should be addressed to the OMB reviewer listed and to the Treasury Department Clearance Officer, Department of the Treasury, room 2224, 1500 Pennsylvania Avenue, NW., Washington, DC 20220.

Bureau of Alcohol, Tobacco and Firearms

OMB Number: 1512–0057.
Form Number: ATF F 487–B (5170.7).
Type of Review: Revision.
Title: Application and Permit to Ship Liquors and Articles of Puerto Rican Manufacture Tax Paid.

Description: ATF F 487–B (5107.7) is used to document the shipment of tax paid Puerto Rican liquors and articles to the United States. The form is verified by Puerto Rican and U.S. Treasury officials to certify that products are either taxpaid or deferred under an appropriate bond. It also serves as a method of protection of the revenue.

Respondents: Businesses or other for-profit, Small businesses or organizations.
Estimated Number of Respondents: 20.
Estimated Burden Hours Per Response: 30 minutes.
Frequency of Response: On occasion.
Estimated Total Reporting Burden: 100 hours.

Clearance Officer: Robert Masarsky (202) 566–7077, Bureau of Alcohol, Tobacco and Firearms, room 7011, 1200 Pennsylvania Avenue, NW., Washington, DC 20226.

OMB Reviewer: Milo Sunderhauf (202) 395–6880, Office of Management and Budget, room 3001, New Executive Office Building, Washington, DC 20503.

Lois K. Holland,

Departmental Reports, Management Officer.

[FR Doc. 90–10145 Filed 5–1–90; 8:45 am]

BILLING CODE 4810–31–M

Public Information Collection Requirements Submitted to OMB for Review

Date: April 26, 1990.

The Department of Treasury has submitted the following public information collection requirement(s) to OMB for review and clearance under the Paperwork Reduction Act of 1980, Public Law 96–511. Copies of the submission(s) may be obtained by calling the Treasury Bureau Clearance Officer listed. Comments regarding this information collection should be addressed to the OMB reviewer listed and to the Treasury Department Clearance Officer, Department of the Treasury, room 3171 Treasury Annex, 1500 Pennsylvania Avenue, NW., Washington, DC 20220.

Internal Revenue Service

OMB Number: 1545–1034.
Form Number: IRS Form 8582–CR.
Type of Review: Revision.
Title: Passive Activity Credit Limitations.

Description: Under section 469, credits from passive activities, to the extent they do not exceed the tax attributable to net passive income are not allowed. Form 8582–CR is used to figure the passive activity credit allowed and the amount of credit to be reported n the tax return. Worksheets 1, 2, 3, and 4 in the instructions are used to figure the amounts to be entered on lines 1, 2, 3, and 4 of Form 8582–CR and worksheets 5 through 8 are used to allocate the credits allowed back to the individual activities.

Respondents: Individual or households, Farms, Businesses or other for–profit.

Estimated Number of Responses/ Recordkeeping: 900,000.

Estimated Burden Hours Per Respondent/Recordkeeper:

	Recordkeeping	Learning about the law or form	Preparing the form	Sending
8582–CR	3 hr., 6 min.	4 hr., 29 min.	4 hr., 26 min.	35 min.
Part IV		10 min.	9 min.	7 min.
Tax Comp.		18 min.	18 min.	7 min.
Worksheet 3		3 min.	3 min.	7 min.
Worksheet 7		6 min.	6 min.	7 min.

Frequency of Response: Annually.
Estimated Total Reporting/ Recordkeeping Burden: 11,340,825 hours.

Clearance Officer: Garrick Shear (202) 535–4297, Internal Revenue Service, room 5571, 1111 Constitution Avenue, NW., Washington, DC 20224.

OMB Reviewer: Milo Sunderhauf (202) 395–6880, Office of Management and Budget, room 3001, New Executive Office Building, Washington, DC 20503.

Lois K. Holland,

Departmental Reports, Management Officer.

[FR Doc. 90–10146 Filed 5–1–90; 8:45 am]

BILLING CODE 4830–01–M

[105–08]

Organization, Functions, and Authority Delegations: Financial Crimes Enforcement Network

April 25, 1990.

Subject: Establishment of the Financial Crimes Enforcement Network.

By virtue of the authority vested in me as the Secretary of the Treasury, including authority in 31 U.S.C. 321(b), it is ordered that:

1. The Financial Crimes Enforcement Network ("FinCEN") is hereby established as an office in the Office of the Assistant Secretary (Enforcement). The Director of FinCEN shall report directly to, and operate under guidelines and policies established by, the Assistant Secretary (Enforcement). Staff assistance and advice on day-to-day matters and policy issues shall be provided to FinCEN by the Deputy Assistant Secretary (Law Enforcement) and staff. Close coordination between the FinCEN staff and the Deputy Assistant Secretary (Law Enforcement) and staff will be required.

2. The mission of FinCEN is to provide a governmentwide, multisource intelligence and analytical network in support of the detection, investigation,

and prosecution of domestic and international money laundering and other financial crimes by Federal, State, local, and foreign law enforcement agencies.

3. The Director of FinCEN is responsible for:

a. Directing a core staff composed of Departmental Offices employees and other personnel detailed to FinCEN, including experts from the U.S. Customs Service, the Internal Revenue Service, other Federal law enforcement bureaus, financial institution regulatory agencies, and private industry to centralize and combine expertise on both the national and international financial systems and the detection and prevention of money laundering and other financial crimes;

b. Advising and making recommendations on matters relating to financial intelligence and other financial criminal activity to the Assistant Secretary (Enforcement);

c. Maintaining a governmentwide data access service, with access, in accordance with applicable legal requirements, to:

(1) Information collected by Treasury, including report information filed under the Bank Secrecy Act and section 6050I of the Internal Revenue Code;

(2) Information regarding national and international currency flows;

(3) Other records and data maintained by other Federal, State, local, and foreign agencies, including financial and other records developed in specific cases; and

(4) Other privately and publicly available information;

d. Analyzing and disseminating the available data in accordance with applicable legal requirements and policies and guidelines established by the Assistant Secretary (Enforcement) to:

(1) Identify possible criminal targets to appropriate Federal, State, local, and foreign law enforcement agencies;

(2) Support ongoing criminal financial investigations and prosecutions and related proceedings, including civil and criminal tax and forfeiture proceedings;

(3) Identify possible instances of non-compliance with the Bank Secrecy Act to Federal agencies with delegated responsibility for Bank Secrecy Act compliance;

(4) Evaluate and recommend possible uses of special currency reporting under 31 U.S.C. 5326; and

(5) Determine emerging trends and methods in money laundering and other financial crimes.

e. Establishing a financial crimes communications center to furnish law enforcement authorities with intelligence information related to ongoing investigations and undercover operations; and

f. Furnishing research, analytical, and informational services to financial institutions, financial institution regulators, and Federal, State, local, and foreign law enforcement authorities in accordance with policies and guidelines established by the Assistant Secretary (Enforcement) in the interest of detection, prevention, and prosecution of money laundering and other financial crimes.

Nicholas F. Brady,

Secretary of the Treasury.

[FR Doc. 90–10147 Filed 5–1–90; 8:45 am]

BILLING CODE 4810–25–M

Sunshine Act Meetings

Federal Register
Vol. 55, No. 85
Wednesday, May 2, 1990

This section of the FEDERAL REGISTER contains notices of meetings published under the "Government in the Sunshine Act" (Pub. L. 94-409) 5 U.S.C. 552b(e)(3).

COMMODITY FUTURES TRADING COMMISSION

TIME AND DATE: 11:30 a.m., Friday, May 4, 1990.

PLACE: 2033 K St., NW., Washington, DC, 8th Floor Hearing Room.

STATUS: Closed.

MATTERS TO BE CONSIDERED: Enforcement Matters.

CONTACT PERSON FOR MORE INFORMATION: Jean A. Webb, 254–6314.

Jean S. Webb,
Secretary of the Commission.
[FR Doc. 90–10295 Filed 4–30–90; 11:45 am]
BILLING CODE 6351-01-M

FEDERAL DEPOSIT INSURANCE CORPORATION

Agency Meeting

Pursuant to the provisions of the "Government in the Sunshine Act" (5 U.S.C. 552b), notice is hereby given that at 1:36 p.m. on Thursday, April 26, 1990, the Board of Directors of the Federal Deposit Insurance Corporation met in closed session, by telephone conference call, to consider matters relating to an assistance agreement pursuant to section 13 of the Federal Deposit Insurance Act.

In calling the meeting, the Board determined, on motion of Director C.C. Hope, Jr. (Appointive), seconded by Director Robert L. Clarke (Comptroller of the Currency), concurred in by Director T. Timothy Ryan, Jr. (Director of the Office of Thrift Supervision) and Chairman L. William Seidman, that Corporation business required its consideration of the matters on less than seven days' notice to the public; that no earlier notice of the meeting was practicable; that the public interest did not require consideration of the matters in a meeting open to public observation; and that the matters could be considered in a closed meeting by authority of subsections (c)(4), (c)(6), (c)(8), (c)(9)(A)(ii), and (c)(9)(B) of the "Government in the Sunshine Act" (5 U.S.C. 552b(c)(4), (c)(6), (c)(8), (c)(9)(A)(ii), and (c)(9)(B)).

Dated: April 27, 1990.

Federal Deposit Insurance Corporation.
Robert E. Feldman,
Deputy Executive Secretary.
[FR Doc. 90–10354 Filed 4–30–90; 3:25 pm]
BILLING CODE 6717-01-M

FEDERAL RESERVE SYSTEM BOARD OF GOVERNORS

TIME DATE: 11:00 a.m., Monday, May 7, 1990.

PLACE: Marriner S. Eccles Federal Reserve Board Building, C Street entrance between 20th and 21st Streets, N.W., Washington, D.C 20551.

STATUS: Closed.

MATTERS TO BE CONSIDERED:

1. Personnel actions (appointments, promotions, assignments, reassignments, and salary actions) involving individual Federal Reserve System employees.
2. Any items carried forward from a previously announced meetings.

CONTACT PERSON FOR MORE INFORMATION: Mr. Joseph R. Coyne, Assistant to the Board; (202) 452–3204. You may call (202) 452–3207, beginning at approximately 5 p.m. two business days before this meeting, for a recorded announcement of bank and bank holding company applications scheduled for the meeting.

Dated: April 27, 1990.

Jennifer J. Johnson,
Associate Secretary of the Board.
[FR Doc. 90–10271 Filed 4–30–90; 10:47 am]
BILLING CODE 6210-01-M

MERIT SYSTEMS PROTECTION BOARD

TIME AND DATE: 10:00 a.m., Wednesday, May 9, 1990.

PLACE: Eighth Floor, 1120 Vermont Avenue NW., Washington, DC.

STATUS: Open [A portion of the meeting may be closed subject to the recorded vote of a majority of the Board to discuss matters exempt from the provisions of the Government in the Sunshine Act under 5 U.S.C. 552b(c)(10)].

MATTERS TO BE CONSIDERED: *Marshall* versus *Government Printing Office*, DC07528810115, DC075281C9051; to hear the agency's response to the Board's order dated April 27, 1990, directing certain officials of the agency to "show cause why their salaries should not be withheld in accordance with the authority described at 5 U.S.C. 1204(a) and (e)(2)(A) (West Supp. July 1989) for the period of noncompliance" with the Board's back pay order in this case.

CONTACT PERSON FOR ADDITIONAL INFORMATION: Robert E. Taylor, Clerk of the Board, (202) 653–7200.

Dated: April 30, 1990.

Robert E. Taylor,
Clerk of the Board.
[FR Doc. 90–10323 Filed 4–30–90; 1:12 pm]
BILLING CODE 7400-01-M

SECURITIES AND EXCHANGE COMMISSION

"FEDERAL REGISTER" CITATION OF PREVIOUS ANNOUNCEMENT: [55 FR 13882 April 12, 1990].

STATUS: Closed meeting.

PLACE: 450 Fifth Street NW., Washington, DC.

DATE PREVIOUSLY ANNOUNCED: Monday, April 9, 1990.

CHANGE IN THE MEETING: Additional item.

The following additional item was considered at a closed meeting on Tuesday, April 17, 1990, at 2:30 p.m.

Dismissal of injunctive action.

Commissioner Fleischman, as duty officer, determined that Commission business required the above change.

At times, changes in Commission priorities require alterations in the scheduling of meeting items. For further information and to ascertain what, if any, matters have been added, deleted or postponed, please contact: John Kincaid at (202) 272–2000.

Dated: April 25, 1990.

Jonathan G. Katz,
Secretary.
[FR Doc. 90–10297 Filed 4–30–90; 11:59 am]
BILLING CODE 8010-01-M

UNIFORMED SERVICES UNIVERSITY OF THE HEALTH SCIENCES

TIME AND PLACE: 6:00 p.m., May 18, 1990.

PLACE: Uniformed Services University of the Health Sciences, Room D3–001, 4301 Jones Bridge Road, Bethesda, Maryland 20814–4799.

STATUS: Open—under "Government in the Sunshine Act" (5 U.S.C. 552b(e)(3)).

MATTERS TO BE CONSIDERED:

6:00 p.m. Meeting—Board of Regents

(1) Approval of Minutes—January 28, 1990; (2) Faculty Matters; (3) Report—Admissions; (4) Report—Associate Dean for Operations; (5) Report—Dean, Military Medicine Education Institute;

(6) Report—President, USUHS; (7) Report—Nursing School Task Force; (8) Comments—Members, Board of Regents; (9) Comments—Chairman, Board of Regents

New Business

SCHEDULED MEETINGS: July 9, 1990.

CONTACT PERSON FOR MORE INFORMATION: Charles R. Mannix, Executive Secretary of the Board of Regents, 202/295–3028.

Dated: April 30, 1990.

Patricia H. Means,

OSD Federal Register Liaison Officer, Department of Defense.

[FR Doc. 90–10355 Filed 4–30–90; 3:38 pm]

BILLING CODE 3810–01–M

federal register

Wednesday
May 2, 1990

Part II

Department of Transportation

Research and Special Programs Administration

49 CFR Parts 171, 172, and 173

Requirements for Explosives; Notice of Proposed Rulemaking

DEPARTMENT OF TRANSPORTATION

Research and Special Programs Administration

49 CFR Parts 171, 172, and 173

[Docket No. HM-181A; Notice No. 90-5]

RIN 2137-AA01

Requirements for Explosives

AGENCY: Research and Special Programs Administration (RSPA) DOT.

ACTION: Notice of proposed rulemaking (NPRM).

SUMMARY: RSPA proposes to amend the Hazardous Materials Regulations (HMR; 49 CFR parts 171–180) with regard to hazard classification, packaging and hazard communication requirements applicable to explosives. The proposed changes are based on the United Nations Recommendations on the Transport of Dangerous Goods (UN Recommendations). The purpose of this action is to: simplify the HMR; promote flexibility and technological advances in packaging; promote safety through better classification and packaging of explosives; and harmonize domestic regulations for explosives with those used internationally. The intended effect of this action is to enhance safety and facilitate international commerce with regard to the transport of explosives.

DATES: Comments must be received on or before July 16, 1990.

ADDRESSES: Address comments to the Dockets Unit, Research and Special Programs Administration, U.S. Department of Transportation, Washington, DC 20590. Comments should identify the docket and be submitted, if possible, in five copies. Persons wishing to receive confirmation of receipt of their comments should include a self-addressed stamped postcard showing the docket number (i.e., Docket HM-181A). The Dockets Unit is located in room 8419 of the Nassif Building, 400 Seventh Street, SW., Washington, DC 20590. Telephone: (202) 366–5046. The public dockets may be reviewed between the hours of 8:30 a.m. to 5 p.m., Monday through Friday.

FOR FURTHER INFORMATION CONTACT: Charles H. Ke (202–366–4545) or Delmer F. Billings (202–366–4488), Office of Hazardous Materials Transportation, RSPA, 400 Seventh Street SW., Washington, DC 20590.

SUPPLEMENTARY INFORMATION: This document proposes changes, both editorial and substantive, to substantial portions of the existing HMR as they relate to explosives. These proposals can be separated into two categories: (1) Modifications to proposals initiated under Docket HM-181, Notice No. 87-4 (52 FR 42772, November 6, 1987; and, (2) new proposals. The relationship of Notice No. 87-4 to this NPRM and the two types of proposals undertaken in this NPRM will be discussed later in this preamble. These changes, if adopted, would reduce the total volume of the HMR, and would provide a basis for the classification of explosives that is consistent with the UN Recommendations.

Due to the length and complexity of the current regulations and this proposal, the supplementary information is presented under the following headings to assist the reader:

I. Background
II. Major Features
III. Review by Sections
IV. Transition Period and Effective Date of Regulations
V. Amendatory Language
VI. Administrative Notices

I. Background

On May 5, 1987, RSPA issued a NPRM, entitled "Performance-Oriented Packaging Standards" (Docket No. HM-181; Notice No. 87-4; 52 FR 16482), that proposed sweeping changes to the HMR, particularly with regard to adoption of performance-oriented packaging standards and new or revised requirements for hazard classification and communication. Notice No. 87-4 was republished on November 6, 1987 (52 FR 42772) with corrections and supplemental proposals to the May 5, 1987 publication. The May 5, 1987, Notice No. 87-4 stated:

> the time that RSPA began considering the desirability of issuing performance-oriented packaging standards to replace the packaging specifications found in the HMR, it was apparent that explosives would be a major part of any such effort. RSPA's requirements for testing and classing explosives are outdated and many packagings are obsolete. Because the size of any regulatory project covering the classing and packaging of explosives is so great, and because the testing, classing, and packaging of explosives is so specialized, RSPA decided to handle explosives in another rulemaking action which will be issued under Docket HM-181A.

This notice supplements the rulemaking initiated under Notice 87-4 by proposing to revise requirements of the HMR and by modifying certain proposals of Notice No. 87-4, applicable to explosives, based on the UN Recommendations. Substantial background information is provided in the May 5, 1987, publication of Notice No. 87-4, however, the following is a list of the major considerations in support of this proposal:

(1) The UN classification system conveys more directly the hazard characteristics possessed by a given explosive item. Proper classification, or categorization, is necessary to ensure appropriate packaging, hazard communication and handling and, thus, enhance transportation safety.

(2) The UN packaging system is performance-oriented, thereby encouraging use of efficient, yet safe, packagings.

(3) The UN compatibility group concept enhances safety in transportation, as well as storage and emergency response procedures for explosives, by improving the segregation requirements.

(4) For many years, RSPA, with the assistance of representatives of the explosives industry, has actively participated in the development of the UN Recommendations for world-wide transportation and believes that they merit consideration for adoption in the United States.

Requirements of the HMR focus, in part, on hazard classification, packaging, and hazard communication. Explosives are classified after examination of either test results or design of the explosive device. Although certain test methods and criteria are given in the HMR, there is no systematic test scheme to cover all categories of explosives. Additionally, the current explosives classification system only gives a general idea of the hazards associated with an explosive article. For example, some detonators and high explosives are Class A explosives. The designation "Class A" itself does not convey the message that these two types of explosives have distinct hazard properties and must not be transported or stored together. Additional safety provisions, such as segregation and separation requirements, are currently provided separately in the HMR. Such disjointed regulations may lead to confusion and non-compliance.

Current packaging requirements for explosives are based on a specification-oriented concept that is cumbersome to use and technologically outdated. Typical specifications, which are found in 49 CFR part 178, contain very precise requirements for materials of construction, thickness, fastenings, capacity, coatings, openings, joinings and carrying devices. Much of the information contained in a specification is given in great detail and is repetitious. For example, the regulations for wooden boxes specify the thickness and width of boards, kinds and dimensions of nails, and spacing of nails used in joining boxes.

Some DOT specification packagings are obsolete or little used. Others are too expensive to make or too labor-intensive to pack. On the other hand, new and cost efficient packagings for hazardous materials are constantly being developed. Since they are not included in the DOT specifications (part 178), however, new or innovative packagings for hazardous materials may only be used under the terms and conditions of exemptions issued by DOT granting a person relief from applicable portions of the HMR.

The Committee of Experts on the Transport of Dangerous Goods of the UN Economic and Social Council has developed a system of recommended safety standards for the transportation of hazardous materials, including explosives. The UN system for classification of explosives is based on test results (augmented in some cases with specific definitions) coupled with the assignment of a compatibility group letter to convey more specifically the hazardous characteristics of each individual explosive item. The compatibility group letter is tied to segregation requirements for transportation, thus, enhancing safety by specifying the different types of explosives that may be transported together.

Packaging requirements in the UN system are based on performance criteria. Explosive items with the same hazard characteristics are grouped together and are assigned a specific "packaging method." The packaging method specifies, in general terms, the type of packagings, not specific packaging, that may be used to ship an explosive. New and innovative packagings can be used provided that the packaging meets the performance-based standards.

For the foregoing reasons, RSPA is proposing to revise the current packaging and classification system for explosives. Packaging requirements for explosives would be based on a performance-oriented system rather than on a specification-oriented system. Additionally, explosive classifications would be based on performance testing criteria that identifies explosive materials more explicitly than the current system that only identifies the general hazard of the article.

II. Major Features

A. Format Improvements

The proposals contained in this document are considered to be a continuation of the proposals to revise and update the HMR that was initiated under Docket No. HM-181; Notice No. 87-4. To that extent, these proposals are intended to reduce the total volume and to improve the format of the HMR. In addition to more simplified and consolidated package manufacturing requirements, all authorized shipping names would be consolidated into a single Hazardous Materials Table (HMT).

B. Regulatory Features

The significant regulatory proposals of this document are as follows:

1. The UN explosives classification system would replace the current system in the HMR. Proposed hazard class designations consist of two numbers, separated by a period, and followed by a letter. The first number denotes the Class number (Class 1 is for explosives) and the second number denotes the Division number within the class. The letter denotes the Compatibility Group. The combination of the two numbers and letter forms the classification code. For example, classification code 1.2B denotes Class 1, Division 2, Compatibility Group B.

2. A "packaging method" would be assigned to each explosive listed in the Hazardous Materials Table in § 172.101 (§ 172.101 Table). Certain unique domestic packaging provisions would be accommodated in the § 172.101 Table.

3. Classifications for new explosives would be based on the UN classification methodology, except for the definition of Division 1.4. This methodology includes sequential steps for classifying explosives, test methods, and criteria used for assigning classification codes.

Division 1.4, would be based on the UN methodology, however, the maximum quantity of detonating explosive authorized in a device in this division would be limited to 25 grams (0.9 ounce). Without this limitation, a large explosive device containing as much as 250 grams (8.8 ounces) of cast TNT could be classified as Division 1.4. RSPA believes such a classification is unacceptable for transportation. The HMR currently limit detonating devices which are Class C (i.e., the equivalent to the UN Division 1.4) to 25 grams of explosive materials. RSPA believes that the proper classification for explosive devices containing more than 25 grams (0.9 ounce) of a detonating material is Division 1.1 or 1.2, depending on the hazard characteristics of the device. However, the 25 gram (0.9 ounce) limitation would not apply to devices containing deflagrating explosives.

4. A section containing descriptions of terms for explosive materials and articles would be provided for information.

5. Proper shipping names for explosives would be based on those listed in Chapter 2 of the UN Recommendations. Many explosive materials would be described using specific technical names for proper shipping names rather than by generic descriptions, such as "high explosive", "low explosive", or "propellant explosive".

6. Specific explosive materials may be unique to the U.S. explosives industry. Shipping descriptions, classifications, and handling requirements for these materials would be retained, although authorized for domestic transportation only.

7. Certain explosives would be required or authorized to be packed in packagings or quantities which differ from the UN Recommendations, because they are unique to the U.S. transportation system.

8. Hazard communication requirements would be consistent with those of the UN Recommendations. Many of these requirements already have been proposed in Notice No. 87-4. This proposal supplements Notice No. 87-4 by adding entries for Division 1.6 labels and placards and by proposing to require the marking of "EX numbers" on the outside of packages.

III. Review by Sections

Note: Unless otherwise noted, this section-by-section review is based on the recodification proposed in Notice No. 87-4 (52 FR 42772, November 6, 1987).

A. Part 171: General Information, Regulations, Definitions

Section 171.7. In § 171.7, one new reference would be added and two existing references would be revised regarding explosive testing for classification purposes.

Section 171.8. In § 171.8 new definitions of "Compatibility group letter," "EX number" and "Offshore supply vessel" would be added.

Section 171.12. In § 171.12, proposed paragraph (b) is revised to include explosives in all classification codes.

B. Part 172: Hazardous Materials Table, Special Provisions and Hazardous Materials Communication Regulations

1. Subpart B of Part 172: Table of Hazardous Materials, Special Provisions and Appendix A

The same format used in Notice No. 87-4 is used in this notice. Those entries for which RSPA is proposing variances with the UN or which are not provided for by the UN but are essential for domestic transportation are included in the § 172.101 Table and identified with

the letter "D". in column 1 of the Table. The proper shipping name, classification code, identification number, packing group, packaging requirements, and label are taken from the UN Recommendations. Quantity limitations for air shipments are based on the International Civil Aviation Organization Technical Instructions for the Safe Transport of Dangerous Goods by Air (ICAO Technical Instructions).

The stowage requirements for water shipments are based on the International Maritime Dangerous Goods Code (IMDG Code). However, the proposals contained in this document, because of a time and resource constraint, have not incorporated those changes in stowage requirements, which are only editorial in nature, that will be adopted by the IMDG Code in January of 1991. It is our intention, however, that any final rule issued under this docket will be consistent with the stowage requirements of the IMDG Code.

In proposed § 172.102, those special provisions applicable to explosive (Class l materials) would be added. These special provisions, which are noted in column 7 of the Hazardous Materials Table, would apply to multi-modal shipments and to bulk and non-bulk packagings.

2. Subpart D of Part 172: Marking

In subpart D of part 172, § 172.320 would be added to require packages be marked with the approval number (i.e., the EX-number) for the explosive. This will communicate to carriers that packages of explosives have been approved for transportation.

3. Subpart E: Labeling

In § 172.400, proposed paragraph (b) is revised by adding an entry for Explosives 1.6. Proposed 172.405(a) is revised to include Class 1 materials. Proposed § 172.411 is revised to include a label for Division 1.6.

4. Subpart F: Placarding

Table 2 of proposed § 172.504 is revised to add a reference to the placard for Division 1.6. Section 172.525 would be added to describe the Division 1.6 placard.

C. Part 173: Shippers, General Requirements for Shipments and Packagings

1. A new subpart C and appendix D would be added to read as follows:

a. *Section 173.50: Class 1—Definitions.* This section would define explosives and each division for explosives. In the proposed classification system, explosives are Class 1 and are further divided into six divisions, namely Divisions 1.1, 1.2, 1.3, 1.4, 1.5, and 1.6. Each division, except for Divisions 1.4 and 1.6, covers explosive substances as well as explosive devices and articles.

b. *Section 173.51: Authorization to offer and transport explosives.* This section proposes to specifically require that all explosives be tested and approved as specified in the HMR prior to shipment.

c. *Section 173.52: Classification codes and compatibility groups of explosives.* The compatibility group letters and classification codes for explosive articles and substances would be included in this section. Except for Division 1.4 Compatibility Group S (1.4S), the compatibility group letter of an explosive item would be assigned by definition, as specified in Table 2 of this section. The division numbers would be based on the results of the testing of the explosive. Altogether there would be 35 classification codes in this new system as compared to only four categories in the current classification system.

d. *Section 173.53: Provisions for using old classifications for explosives.* The current classification system has served as a basis for categorizing hazardous materials outside of the transportation environment. This is particularly true for explosives. Thousands of state and local governments have issued requirements for the handling, storage and use of explosives using the current classification system and descriptions for explosives, particularly in ordinances or codes related to fire safety for storage facilities. Therefore, RSPA is proposing to add § 173.53 to provide a cross reference between the proposed new classification codes and the existing classifications for explosives. This would provide for the continued use of the existing classifications for explosives in non-transportation situations.

e. *Section 173.54: Forbidden explosives.* This section would be equivalent to § 173.51 of the existing HMR and would list those categories of explosives which must not be transported.

f. *Section 173.56: New explosives—definition and procedure for classification and approval.* This section would contain the definition for a new explosive. As defined in the proposal, the definition of a new explosive, which will be essentially the same as it is currently defined in § 173.86, would be broken into three parts. First, any explosive that has not been approved by the Director of the Office of Hazardous Materials Transportation (OHMT), even though the explosive has been produced previously, would be considered a new explosive. A common misunderstanding has been that if a given explosive has been manufactured or used for some period of time, then it is not a new explosive. This is not correct. For example, "black powder" is a well known explosive. However, black powder may not be shipped by a new manufacturer unless that manufacturer has obtained an approval from the Director, OHMT. One manufacturer's approval may not be used by another. Secondly, any explosive whose formula or manufacturing process has been modified that results in an alteration of the properties of that explosive, would be considered a new explosive. To reduce the compliance burden, RSPA is proposing a provision for designated laboratories to determine if the changes made by a manufacturer actually alter the properties of an explosive to such an extent as to affect safety and to warrant testing of the explosive as a new explosive.

This section also proposes procedures, which would be equivalent to those found in § 173.86 of the existing HMR, for examination, classifying, and approving new explosives. Two laboratories, the Bureau of Explosives and the Bureau of Mines, would be designated as authorized to examine and recommend classification codes for explosives. The Department of Defense (DOD) and the Department of Energy (DOE) would be authorized to class those explosives made by or under the supervision of DOD or DOE. Included in this section would be provisions allowing for the shipment of explosive samples to testing laboratories for the purposes of testing and evaluation.

g. *Section 173.57: Acceptance criteria for new explosives.* This section would contain criteria for specific tests required for substances to be classed as new explosives. Tests for ammonium nitrate-fuel oil mixtures would be included. Additional criteria for determining if a substance is a forbidden explosive are proposed.

h. *Section 173.58: Assignment of class and division for new explosives.* This section proposes to prescribe the specific tests and criteria which must be satisfied for assigning a classification code to a new explosive.

i. *Section 173.59: Description of terms for explosives.* This section would provide nomenclature clarification and descriptions for certain terms and types of explosives. This listing is provided for general information and should not be used as a determining factor when selecting proper shipping descriptions for explosives.

j. *Section 173.60: General packaging requirements for explosives.* This section proposes general packaging requirements for all explosives.

k. *Section 173.61: Mixed packaging requirements.* This section proposes conditions under which explosive substances may be packaged with other materials.

l. *Section 173.62: Specific packaging requirements.* Specific packaging requirements for each explosive are proposed in this section. The section is divided into three parts, the first part sets forth a table of explosives, in which each explosive is listed in numerical order by its identification number followed by a packaging method. The second part provides the detailed packaging requirements for each packaging method and the third part provides additional packaging requirements or exceptions to each packaging method, if appropriate.

m. *Section 173.63: Packaging exceptions.* This section proposes exceptions for packaging and transporting certain explosives domestically, where the requirements are different from those specified in the UN Recommendations.

IV. Transition Period and Effective Date of Regulations

If the proposals presented in this notice are adopted in a final rule, RSPA is considering delaying the effective date of a final rule, for most of the regulatory provisions contained therein, for a period of five years from date of publication. The effective date would be consistent with the issuance of a final rule under Docket HM–181, Notice No. 87–4. Voluntary compliance with the new requirements would be authorized immediately upon publication or as soon thereafter as is practicable. A five year implementation period would facilitate the changeover from present requirements to the new requirements and, thus, mitigate the burden of complying with the new regulatory requirements, particularly with regard to hazard communication. Additionally, RSPA will provide a new classification, upon request, for those explosives classed under the current system. Because of the large number of requests that RSPA anticipates, it would be necessary for such requests to be submitted in a timely manner to allow RSPA sufficient time to respond.

V. Amendatory Language

The proposals of this NPRM are broken down into two categories: (1) proposals to amend the existing HMR; and (2) modifications of our earlier proposal, initiated under Notice 87–4, to amend the HMR. For those proposals which are modifications to Notice No. 87–4, the amendatory language will reference the **Federal Register** volume and its page number and the date the previous proposal was published in the **Federal Register**. For example, one amendatory language sentence reads as follows: "In proposed paragraph (e) of § 172.504, as proposed at 52 FR 42944 on November 6, 1987, the entry '1.6..... Explosives 1.6..... 172.525' is added in numeric sequence to Table 2." The page number refers to volume 52, page 42944 of the **Federal Register** (52 FR 42944), which was published on November 6, 1987, where the reader will find a proposal to revise paragraph (e) of § 172.504. This rulemaking is modifying that proposal by inserting "1.6..... Explosives 1.6..... 172.525" in numerical sequence to Table 2. RSPA understands that such a "dual proposal" will cause some confusion, however, RSPA believes that a republication of Notice No. 87-4, incorporating the proposals of this NPRM, would be impractical and burdensome for the reader because of the sheer size of such a document.

VI. Administrative Notices

A. Executive Order 12291

The effect of this rule, as proposed, does not meet the criteria specified in section 1(b) of Executive Order 12291 and is, therefore, not a major rule, but is a significant rule under the regulatory procedures of the Department of Transportation (44 FR 11034). This proposed rule does not require a Regulatory Impact Analysis, or an environmental assessment or impact statement under the National Environmental Policy Act (42 FR 4321 et seq.). A regulatory evaluation is available for review in the Docket.

B. Executive Order 12612

This proposed action has been analyzed in accordance with the principles and criteria in Executive Order 12612 and, based on the information available at this time, RSPA does not believe that the proposed rule would have sufficient Federalism implications to warrant the preparation of a Federalism Assessment. RSPA is proposing standards for the classification and transportation of explosives and is not requiring states to adopt them.

C. Impact on Small Entities

Based on limited information concerning size and nature of entities likely affected by this proposed rule, I certify this proposal will not, if promulgated, have a significant economic impact on a substantial number of small entities under criteria of the Regulatory Flexibility Act. This certification is subject to modification as a result of a review of comments received in response to this proposal.

D. Paperwork Reduction Act

The information collection requirements contained in proposed §§ 172.320 and 173.56 are being submitted to the Office of Management and Budget (OMB) for review under the provisions of the Paperwork Reduction Act of 1980 (44 U.S.C. 3504(h)). Comments on the collection of information should be sent to the Office of Information and Regulatory Affairs, Office of Management and Budget, Washington, DC, attention: Desk Officer for the Department of Transportation. All comments must reference the title for this notice "Requirements for Explosives".

List of Subjects

49 CFR Part 171

Exports, Hazardous materials transportation, Hazardous waste, Imports, Incorporation by reference, Reporting and recordkeeping requirements.

49 CFR Part 172

Hazardous materials transportation, Hazardous waste, Labeling, Packaging and containers, Reporting and recordkeeping requirements.

49 CFR Part 173

Explosives, Hazardous materials transportation, Packaging and containers, Radioactive materials, Reporting and recordkeeping requirements, Uranium.

Issued in Washington, DC on April 19, 1990, under authority delegated in 49 CFR part 106, appendix A.

Alan I. Roberts,

Director, Office of Hazardous Materials Transportation.

In consideration of the foregoing, 49 CFR parts 171 through 173 would be amended as follows (**Note:** The proposals in this notice are presented in a manner consistent with the format and recodification changes proposed in Docket HM–181, Notice 87–4 (52 FR 42772; November 6, 1987.). Where a proposal is a modification to Notice No. 87–4, the appropriate **Federal Register** page number of Volume 52 is provided:

PART 171—GENERAL INFORMATION, REGULATIONS, AND DEFINITIONS

1. The authority citation for part 171 would continue to read as follows:

Authority: 49 U.S.C. App. 1802, 1803, 1804, 1805, 1808; 49 CFR part 1.

2. In § 171.7(c), as proposed at 52 FR 42778 on November 6, 1987, the entries in the table for the Department of Defense and the United Nations are revised and an entry for American Pyrotechnics Association (APA) is added in alphabetical sequence as follows:

§ 171.7 Matter incorporated by reference.

* * * * *

(c) * * *

Source and name of material	49 CFR reference
* * * * *	
(Add)	
American Pyrotechnics Association (APA), P.O. Box 213, Chestertown, MD 21620.	
APA Standard 87-1, Standard for Construction and Approval for Transportation of Fireworks and Novelties., September 1987 Edition..	173.56
* * * * *	
(Revise)	
Department of Defense (DOD), 2461 Eisenhower Avenue, Alexandria, VA 22331:	
DOD TB 700-2; NAVSEAINST 8020.8; AFTO 11A-1-47; DLAR 8220.1: Explosives Hazard Classification Procedure (December 1989).	173.56
* * * * *	
(Revise)	
United Nations, United Nations Sales Section, New York, N.Y 10017:.	
UN Recommendations on the Transport of Dangerous Goods, Sixth Revised Edition (1989).	172.401; 172.407; 172.519
UN Recommendations on the Transport of Dangerous Goods, Tests and Criteria, First Edition.	173.56; 173.57
* * * *	

3. In § 171.8, the definitions for "compatibility group letter" and "offshore supply vessel" would be added in appropriate alphabetical order and the definition for "EX number" would be revised to read as follows:

§ 171.8 Definitions and abbreviations.

* * * * *

Compatibility group letter means a designated alphabetical letter used to categorize different types of explosive substances and articles for purposes of stowage and segregation (See § 173.52 of this subchapter).

* * * * *

EX number means a number, preceded by the prefix "EX-", which is assigned by the Director, OHMT, to identify an explosive which has been approved.

* * * * *

Offshore supply vessel means a cargo vessel of less than 500 gross tons that regularly transports goods, supplies and equipment in support of exploration or production of offshore mineral or energy resources.

* * * * *

4. In § 171.12, paragraph (b)(3)(ii), as proposed at 52 FR 42783 on November 6, 1987, is revised to read as follows:

§ 171.12 Import and export shipments.

* * * * *

(b) * * *

(3) * * *

(ii) A Class 1 material;

* * * * *

PART 172—HAZARDOUS MATERIALS TABLES, HAZARDOUS MATERIALS, COMMUNICATIONS REQUIREMENTS AND EMERGENCY RESPONSE INFORMATION REQUIREMENTS

5. The authority citation for part 172 would continue to read as follows:

Authority: 49 U.S.C App. 1803, 1804, and 1808; and 49 CFR part 1, unless otherwise noted.

6. In § 172.101, as proposed at 52 FR 42783 on November 6, 1987, the following entries are added, in appropriate alphabetical order, to the Hazardous Materials Table beginning at 52 FR 42787:

§ 172.101 Purpose and use of hazardous materials table.

* * * * *

Symbols	Hazardous materials descriptions and proper shipping names	Hazard class	Identification Numbers	Packing group	Labels	Special provisions	(8) Packaging authorizations (§ 173.***)			(9) Quantity limitations		(10) Vessel stowage requirements		
							Exceptions	Non-bulk packaging	Bulk packaging	Passenger aircraft or railcar	Cargo aircraft only	Cargo vessel	Passenger vessel	Other stowage provisions
(1)	(2)	(3)	(4)	(5)	(6)	(7)	(8A)	(8B)	(8C)	(9A)	(9B)	(10A)	(10B)	(10C)
	Ammonium nitrate fertilizer: *which is more liable to explode than ammonium nitrate with 0.2 per cent combustible substances, including any organic substance calculated as carbon, to the exclusion of any other added substance.*	1.1D	UN0223	II	Explosive 1.1D			62	None	Forbidden	Forbidden	B	5	1E, 5E
D	Ammonium nitrate-fuel oil mixture (containing only prilled ammonium nitrate and fuel oil).	1.5D	NA0331	II	Explosive 1.5D			62	None	Forbidden	Forbidden	B	5	1E, 5E, 17E
	Ammonium nitrate, *with more than 0.2 percent combustible substances, including any organic substance calculated as carbon, to the exclusion of any other added substance.*	1.1D	UN0222	II	Explosive 1.1D			62	None	Forbidden	Forbidden	B	5	1E, 5E
	Ammonium perchlorate	1.1D	UN0402	II	1.1D	107		62	None	Forbidden	Forbidden	B	5	1E, 5E, 17E
	Ammonium picrate, *dry or wetted with less than 10 percent water, by weight.*	1.1D	UN0004	II	Explosive 1.1D			62	None	Forbidden	Forbidden	B	5	1E, 5E, 18E
	Ammunition, illuminating *with or without burster, expelling charge or propelling charge.*	1.2G	UN0171	II	Explosive 1.2G		63(b)	62	None	Forbidden	Forbidden	E	5	1E, 7E
	Ammunition, illuminating *with or without burster, expelling charge or propelling charge.*	1.3G	UN0254	II	Explosive 1.3G		63(b)	62	None	Forbidden	Forbidden	E	5	1E, 7E
	Ammunition, illuminating *with or without burster, expelling charge or propelling charge.*	1.4G	UN0297	II	Explosive 1.4G		63(b)	62	None	Forbidden	75kg	A	1, 3	1E, 7E
	Ammunition, incendiary *liquid or gel, with burster, expelling charge or propelling charge.*	1.3J	UN0247	II	Explosive 1.3J		63(b)	62	None	Forbidden	Forbidden	E	5	1E, 7E
	Ammunition, incendiary (*other than water-activated ammunition*), *without white phosphorus or phosphides, with or without burster, expelling charge or propelling charge.*	1.2G	UN0009	II	Explosive 1.2G		63(b)	62	None	Forbidden	Forbidden	E	5	1E, 7E, 13E, 14E
	Ammunition, incendiary (*other than water-activated ammunition*), *without white phosphorus or phosphides, with or without burster, expelling charge or propelling charge.*	1.3G	UN0010	II	Explosive 1.3G		63(b)	62	None	Forbidden	Forbidden	A	1, 3	1E, 7E

Symbols	Hazardous materials descriptions and proper shipping names	Hazard class	Identification Numbers	Packing group	Labels	Special provisions	(8) Packaging authorizations (§ 173.***)			(9) Quantity limitations		(10) Vessel stowage requirements		
							Exceptions	Non-bulk packaging	Bulk packaging	Passenger aircraft or railcar	Cargo aircraft only	Cargo vessel	Passenger vessel	Other stowage provisions
(1)	(2)	(3)	(4)	(5)	(6)	(7)	(8A)	(8B)	(8C)	(9A)	(9B)	(10A)	(10B)	(10C)
	Ammunition, incendiary (*other than water-activated ammunition*), *without white phosphorus or phosphides, with or without burster, expelling charge or propelling charge.*	1.4G	UN0300	II	Explosive 1.4G		63(b)	62	None	Forbidden	75kg	A	1, 3	1E, 7E, 13E, 14E
	Ammunition, incendiary, white phosphorus, *with burster, expelling charge or propelling charge.*	1.2H	UN0243	II	Explosive 1.2H		63(b)	62	None	Forbidden	Forbidden	E	5	1E, 2E, 8E, 18E
	Ammunition, incendiary, white phosphorus, *with burster, expelling charge or propelling charge.*	1.3H	UN0244	II	Explosive 1.3H		63(b)	62	None	Forbidden	Forbidden	E	5	1E, 2E, 8E, 15E
	Ammunition, practice	1.4G	UN0362	II	Explosive 1.4G		63(b)	62	None	Forbidden	75kg	A	1, 2	1E, 7E
	Ammunition, proof	1.4G	UN0363	II	Explosive 1.4G		63(b)	62	None	Forbidden	75kg	A	1, 2	1E, 7E
	Ammunition, smoke (*other than water-activated ammunition*), *without white phosphorus or phosphides, with or without burster, expelling charge or propelling charge.*	1.3G	UN0016	II	Explosive 1.3G		63(b)	62	None	Forbidden	Forbidden	E	5	1E, 2E, 8E, 15E
	Ammunition, smoke (*other than water-activated ammunition*), *without white phosphorus or phosphides, with or without burster, expelling charge or propelling charge.*	1.4G	UN0303	II	Explosive 1.4G		63(b)	62	None	Forbidden	75kg	E	5	1E, 2E, 8E, 15E
	Ammunition, smoke (*other than water-activated ammunition*), *without white phosphorus or phosphides with or without burster, expelling charge or propelling charge.*	1.2G	UN0015	II	Explosive 1.2G		63(b)	62	None	Forbidden	Forbidden	E	5	1E, 2E, 8E, 15E
	Ammunition, smoke, white phosphorus (*other than water-activated ammunition*), *with burster, expelling charge or propelling charge.*	1.3H	UN0246	II	Explosive 1.3H		63(b)	62	None	Forbidden	Forbidden	E	5	1E, 2E, 8E, 15E
	Ammunition smoke, white phosphorus (*other than water-activated ammunition*), *with burster, expelling charge or propelling charge.*	1.2H	UN0245	II	Explosive 1.2H		63(b)	62	None	Forbidden	Forbidden	E	5	1E, 2E, 8E, 15E
	Ammunition, tear-producing *with burster, expelling charge or propelling charge.*	1.2G	UN0018	II	Explosive 1.2G		63(b)	62	None	Forbidden	Forbidden	E	5	1E, 2E, 8E, 15E
	Ammunition, tear-producing *with burster, expelling charge or propelling charge.*	1.3G	UN0019	II	Explosive 1.3G		63(b)	62	None	Forbidden	Forbidden	E	5	1E, 2E, 8E, 15E
	Ammunition, tear-producing *with burster, expelling charge or propelling charge.*	1.4G	UN0301	II	Explosive 1.4G		63(b)	62	None	Forbidden	75kg	A	1,3	1E, 2E, 8E, 15E

Symbols	Hazardous materials descriptions and proper shipping names	Hazard class	Identification Numbers	Packing group	Labels	Special provisions	(8) Packaging authorizations (§ 173.***)			(9) Quantity limitations		(10) Vessel stowage requirements		
							Exceptions	Non-bulk packaging	Bulk packaging	Passenger aircraft or railcar	Cargo aircraft only	Cargo vessel	Passenger vessel	Other stowage provisions
(1)	(2)	(3)	(4)	(5)	(6)	(7)	(8A)	(8B)	(8C)	(9A)	(9B)	(10A)	(10B)	(10C)
	Ammunition, toxic (*other than water-activated ammunition*), *with burster, expelling charge or propelling charge.*	1.2K	UN0020	II	Explosive 1.2K		63(b)	62	None	Forbidden	Forbidden	E	5	2E, 8E
	Ammunition, toxic (*other than water-activated ammunition*), *with burster, expelling charge or propelling charge.*	1.3K	UN0021	II	Explosive 1.3K		63(b)	62	None	Forbidden	Forbidden	E	5	2E, 8E
	Articles, explosive, n.o.s	1.1C	UN0462	II	Explosive 1.1C	101		62	None	Forbidden	Forbidden	E	5	1E, 7E
	Articles, explosive, n.o.s	1.1D	UN0463	II	Explosive 1.1D	101		62	None	Forbidden	Forbidden	B	5	1E, 7E
	Articles, explosive, n.o.s	1.1E	UN0464	II	Explosive 1.1E	101		62	None	Forbidden	Forbidden	E	5	1E, 7E
	Articles, explosive, n.o.s	1.1F	UN0465	II	Explosive 1.1F	101		62	None	Forbidden	Forbidden	E	5	1E, 7E
	Articles, explosive, n.o.s	1.2C	UN0466	II	Explosive 1.2C	101		62	None	Forbidden	Forbidden	E	5	1E, 7E
	Articles, explosive, n.o.s	1.2D	UN0467	II	Explosive 1.2D	101		62	None	Forbidden	Forbidden	E	5	1E, 7E
	Articles, explosive, n.o.s	1.2E	UN0468	II	Explosive 1.2E	101		62	None	Forbidden	Forbidden	E	5	1E, 7E
	Articles, explosive, n.o.s	1.2F	UN0469	II	Explosive 1.2F	101		62	None	Forbidden	Forbidden	E	5	1E, 7E
	Articles, explosive, n.o.s	1.3C	UN0470	II	Explosive 1.3C	101		62	None	Forbidden	Forbidden	E	5	1E, 7E
	Articles, explosive, n.o.s	1.4E	UN0471	II	Explosive 1.4E	101		62	None	Forbidden	Forbidden	E	5	1E, 7E
	Articles, explosive, n.o.s	1.4F	UN0472	II	Explosive 1.4F	101		62	None	Forbidden	Forbidden	E	5	1E, 7E
	Articles, explosive, n.o.s	1.4S	UN0349	II	Explosive 1.4S	101		62	None	25kg	100kg	A	1,2	1E, 7E, 9E
	Articles, explosive, n.o.s	1.4B	UN0350	II	Explosive 1.4B	101		62	None	Forbidden	Forbidden	E	5	1E, 7E
	Articles, explosive, n.o.s	1.4C	UN0351	II	Explosive 1.4C	101		62	None	Forbidden	Forbidden	E	5	1E, 7E
	Articles, explosive, n.o.s	1.4D	UN0352	II	Explosive 1.4D	101		62	None	Forbidden	Forbidden	E	5	1E, 5E
	Articles, explosive, n.o.s	1.4G	UN0353	II	Explosive 1.4G	101		62	None	Forbidden	Forbidden	E	5	12E
	Articles, explosive, n.o.s	1.1L	UN0354	II	Explosive 1.1L	101		62	None	Forbidden	Forbidden	B	5	12E
	Articles, explosive, n.o.s	1.2L	UN0355	II	Explosive 1.2L	101		62	None	Forbidden	Forbidden	B	5	12E
	Articles, explosive, n.o.s	1.3L	UN0356	II	Explosive 1.3L	101		62	None	Forbidden	Forbidden	B	5	12E
	Articles, pyrophoric	1.2L	UN0380	II	Explosive 1.2L			62	None	Forbidden	Forbidden	B	5	12E
	Articles, pyrotechnic *for technical purposes.*	1.1G	UN0428	II	Explosive 1.1G			62	None	Forbidden	Forbidden	B	5	1E, 7E
	Articles, pyrotechnic *for technical purposes.*	1.2G	UN0429	II	Explosive 1.2G			62	None	Forbidden	Forbidden	B	5	1E, 7E
	Articles, pyrotechnic *for technical purposes.*	1.3G	UN0430	II	Explosive 1.3G			62	None	Forbidden	Forbidden	B	5	1E, 7E
	Articles, pyrotechnic *for technical purposes.*	1.4G	UN0431	II	Explosive 1.4G			62	None	Forbidden	75kg	A	1,3	1E, 7E
	Articles, pyrotechnic *for technical purposes.*	1.4S	UN0432	II	Explosive 1.4S			62	None	25kg	100kg	A	1,3	1E, 7E
	Articles, pyrotechnic *for technical purposes.*	1.4S	UN0432											
	Barium azide, *dry or wetted with less than 50 percent water, by weight.*	1.1A	UN0224	II	Explosive 1.1A	111		62	None	Forbidden	Forbidden	B	5	2E, 6E
D	Barium styphnate	1.1A	NA0473	II	Explosive 1.1A	111		62	None	Forbidden	Forbidden	B	5	2E, 6E
	Black powder (Gunpowder), compressed *or* Black powder (Gunpowder), in pellets.	1.1D	UN0028	II	Explosive 1.1D			62	None	Forbidden	Forbidden	B	5	1E, 5E
	Black powder (Gunpowder), *granular or as a meal.*	1.1D	UN0027	II	Explosive 1.1D			62	None	Forbidden	Forbidden	B	5	1E, 5E, 10E

Symbols	Hazardous materials descriptions and proper shipping names	Hazard class	Identification Numbers	Packing group	Labels	Special provisions	(8) Packaging authorizations (§ 173.***)			(9) Quantity limitations		(10) Vessel stowage requirements		
							Exceptions	Non-bulk packaging	Bulk packaging	Passenger aircraft or railcar	Cargo aircraft only	Cargo vessel	Passenger vessel	Other stowage provisions
(1)	(2)	(3)	(4)	(5)	(6)	(7)	(8A)	(8B)	(8C)	(9A)	(9B)	(10A)	(10B)	(10C)
D	Blasting agent, n.o.s	1.5D	NA0331	II	Explosive 1.5D			62	None	Forbidden	Forbidden	A	1,2	1E, 5E, 7E
	Bombs, photo-flash	1.1F	UN0037	II	Explosive 1.1F		63(b)	62	None	Forbidden	Forbidden	E	5	1E, 7E
	Bombs, photo-flash	1.1D	UN0038	II	Explosive 1.1D		63(b)	62	None	Forbidden	Forbidden	E	5	1E, 7E
	Bombs, photo-flash	1.2G	UN0039	II	Explosive 1.2G		63(b)	62	None	Forbidden	Forbidden	E	5	1E, 7E
	Bombs, photo-flash	1.3G	UN0299	II	Explosive 1.3G		63(b)	62	None	Forbidden	Forbidden	E	5	1E, 7E
	Bombs, *with bursting charge*	1.1F	UN0033	II	Explosive 1.1F		63(b)	62	None	Forbiden	Forbidden	E	5	3E, 7E
	Bombs, *with bursting charge*	1.1D	UN0034	II	Explosive 1.1D		63(b)	62	None	Forbidden	Forbidden	E	5	3E, 7E
	Bombs, *with bursting charge*	1.2D	UN0035	II	Explosive 1.2D		63(b)	62	None	Forbidden	Forbidden	E	5	3E, 7E
	Bombs, *with bursting charge*	1.2F	UN0291	II	Explosive 1.2F		63(b)	62	None	Forbidden	Forbidden	E	5	3E, 7E
	Bombs with flammable liquid, *with bursting charge.*	1.1J	UN0399	II	Explosive 1.1J		63(b)	62	None	Forbidden	Forbidden	E	5	7E, 14E, 16E
	Bombs with flammable liquid, *with bursting charge.*	1.2J	UN0400	II	Explosive 1.2J		63(b)	62	None	Forbidden	Forbidden	E	5	7E, 14E, 16E
	Boosters, *with detonator*	1.1B	UN0225	II	Explosive 1.1B			62	None	Forbidden	Forbidden	B	5	2E, 6E
	Boosters, *with detonator*	1.2B	UN0268	II	Explosive 1.2B			62	None	Forbidden	Forbidden	E	5	1E, 7E
	Boosters, *without detonator*	1.1D	UN0042	II	Explosive 1.1D			62	None	Forbidden	Forbidden	E	5	1E, 7E
	Boosters, *without detonator*	1.2D	UN0283	II	Explosive 1.2D			62	None	Forbidden	Forbidden	E	5	1E, 7E
	Bursters, *explosive*	1.1D	UN0043	II	Explosive 1.1D			62	None	Forbidden	Forbidden	B	5	1E, 7E
	Caps, toy (*Amorces*)	1.4S												
	Cartridges, flash	1.1G	UN0049	II	Explosive 1.1G			62	None	Forbidden	Forbidden	E	5	1E, 7E
	Cartridges, flash	1.3G	UN0050	II	Explosive 1.3G			62	None	Forbidden	75kg	E	5	1E, 7E
	Cartridges for weapons, blank	1.1C	UN0326	II	Explosive 1.1C			62	None	Forbidden	Forbidden	E	5	1E, 7E, 9E
	Cartridges for weapons, blank (cartridges, small arms, blank).	1.3C	UN0327	II	Explosive 1.3C			62	None	Forbidden	Forbidden	E	5	1E, 7E, 9E
	Cartridges for weapons, blank (cartridges, small arms, blank).	1.4C	UN0338	II	Explosive 1.4C			62	None	Forbidden	75kg	E	5	1E, 7E, 9E
	Cartridges for weapons, blank	1.2C	UN0413	II	Explosive 1.2C			62	None	Forbidden	Forbidden	A	1, 2	1E, 7E, 9E
	Cartridges for weapons, blank (Cartridges, small arms blank).	1.4S	UN0014	II	Explosive 1.4S			62	None	25kg	100kg	A	1, 2	1E, 7E, 9E
	Cartridges for weapons; Inert projectile (cartidges, small arms).	1.4S	UN0012	II	Explosive 1.4S			62	None	25kg	100kg	A	1, 2	1E, 7E, 9E
	Cartridges for weapons, inert projectile (cartidges, small arms).	1.2C	UN0328	II	Explosive 1.2C			62	None	Forbidden	Forbidden	E	5	1E, 7E
	Cartridges for weapons, inert projectile (cartridges, small arms).	1.4C	UN0339	II	Explosive 1.4C			62	None	Forbidden	75kg	A	1, 3	1E, 7E
	Cartridges for weapons, inert projectile.	1.3C	UN0417	II	Explosive 1.3C			62	None	Forbidden	Forbidden	A	1, 3	1E, 7E
	Cartridges for weapons, *with bursting charge.*	1.1F	UN0005	II	Explosive 1.1F			62	None	Forbidden	Forbidden	E	5	1E, 7E
	Cartridges for weapons, *with bursting charge.*	1.2F	UN0007	II	Explosive 1.2F			62	None	Forbidden	Forbidden	E	5	1E, 7E
	Cartridges for weapons, *with bursting charge.*	1.4F	UN0348	II	Explosive 1.4F			62	None	Forbidden	Forbidden	E	5	1E, 7E
	Cartridges for weapons, *with bursting charge.*	1.4E	UN0412	II	Explosive 1.4E			62	None	Forbidden	75kg	A	1, 2	1E, 7E

Symbols	Hazardous materials descriptions and proper shipping names	Hazard class	Identification Numbers	Packing group	Labels	Special provisions	(8) Packaging authorizations (§ 173.***)			(9) Quantity limitations		(10) Vessel stowage requirements		
							Exceptions	Non-bulk packaging	Bulk packaging	Passenger aircraft or railcar	Cargo aircraft only	Cargo vessel	Passenger vessel	Other stowage provisions
(1)	(2)	(3)	(4)	(5)	(6)	(7)	(8A)	(8B)	(8C)	(9A)	(9B)	(10A)	(10B)	(10C)
	Cartridges for weapons, *with bursting charge (projectiles with propelling charge)*.	1.1E	UN0006	II	Explosive 1.1E			62	None	Forbidden	Forbidden	E	5	1E, 7E
	Cartridges for weapons, *with bursting charge (projectiles with propelling charge)*.	1.2E	UN0321	II	Explosive 1.2E			62	None	Forbidden	Forbidden	E	5	1E, 7E
	Cartridges, oil well	1.3C	UN0277	II	Explosive 1.3C			62	None	Forbidden	Forbidden	E	5	1E, 7E, 9E
	Cartridges, oil well	1.4C	UN0278	II	Explosive 1.4C			62	None	Forbidden	75kg	A	1, 3	1E, 7E,
	Cartridges, power device	1.3C	UN0275	II	Explosive 1.3C	110	63(e)	62	None	Forbidden	75kg	A	1, 3	1E, 7E, 9E
	Cartridges, power device	1.4C	UN0276	II	Explosive 1.4C	110		62	None	Forbidden	75kg	A	1, 3	1E, 7E, 9E
	Cartridges, power device	1.2C	UN0381	II	Explosive 1.2C		63(e)	62	None	Forbidden	Forbidden	E	5	1E, 7E, 9E
	Cartridges, power device (Cartridges, safety).	1.4S	UN0323	II	Explosive 1.4S	110		62	None	25kg	100kg	A	1, 2	1E, 7E, 9E
	Cartridges, signal	1.3G	UN0054	II	Explosive 1.3G			62	None	Forbidden	75kg			
	Cartridges, signal	1.4G	UN0312	II	Explosive 1.4G			62	None	Forbidden	75kg	A	1, 2	1E, 7E, 9E
	Cartridges, signal	1.4S	UN0405	II	Explosive 1.4S			62	None	25kg	100kg	A	1, 2	1E, 7E, 9E
	Cases, cartridge, empty with primer	1.4S	UN0055	II	Explosive 1.4S			62	None	25kg	100kg	A	1, 2	1E, 7E, 9E
	Cases, cartridges, empty with primer.	1.4C	UN0379	II	Explosive 1.4C			62	None	Forbidden	75kg	A	1, 3	1E, 7E, 9E
	Cases, combustible, empty, without primer.	1.3C	UN0447	II	Explosive 1.3C			62	None	Forbidden	Forbidden	A	1, 3	1E, 7E, 9E
	Cases, combustible, empty, without primer.	1.4C	UN0446	II	Explosive 1.4C			62	None	Forbidden	75kg	A	1, 3	1E, 7E, 9E
D	Charged well casing jet perforating gun (*total explosive contents in guns 20 pounds or more per motor vehicle*).	1.1D	NA0059	II	Explosive 1.1D			62	None	Forbidden	75kg	E	5	1E, 7E
D	Charged well casing jet perforating gun (*total explosive contents in guns not exceeding 20 pounds per motor vehicle or special offshore down hole tool pallet*).	1.4D	NA0440	II	Explosive 1.4D			62	None	Forbidden	75kg	E	5	1E, 7E
	Charges, bursting, plastics bonded	1.1D	UN0457	II	Explosive 1.1D			62	None	Forbidden	Forbidden	B	5	1E, 7E
	Charges, bursting, plastics bonded	1.2D	UN0458	II	Explosive 1.2D			62	None	Forbidden	Forbidden	B	5	1E, 7E
	Charges, bursting, plastics bonded	1.4D	UN0459	II	Explosive 1.4D			62	None	Forbidden	75kg	E	5	1E, 7E
	Charges, bursting, plastics bonded	1.4S	UN0460	II	Exploisve 1.4S			62	None	25kg	100kg	A	1, 2	1E, 7E, 9E
	Charges, demolition	1.1D	UN0048	II	Explosive 1.1D			62	None	Forbidden	Forbidden	B	5	1E, 7E
	Charges, depth	1.1D	UN0056	II	Explosive 1.1D			62	None	Forbidden	Forbidden	B	5	3E, 7E
	Charges, explosive, commercial *without detonator*.	1.1D	UN0442	II	Explosive 1.1D			62	None	Forbidden	Forbidden	B	5	1E, 7E
	Charges, explosive, commercial *without detonator*.	1.2D	UN0443	II	Explosive 1.2D			62	None	Forbidden	Forbidden	B	5	1E, 7E

Symbols	Hazardous materials descriptions and proper shipping names	Hazard class	Identification Numbers	Packing group	Labels	Special provisions	(8) Packaging authorizations (§ 173.***)			(9) Quantity limitations		(10) Vessel stowage requirements		
							Exceptions	Non-bulk packaging	Bulk packaging	Passenger aircraft or railcar	Cargo aircraft only	Cargo vessel	Passenger vessel	Other stowage provisions
(1)	(2)	(3)	(4)	(5)	(6)	(7)	(8A)	(8B)	(8C)	(9A)	(9B)	(10A)	(10B)	(10C)
	Charges, explosive, commercial *without detonator.*	1.4D	UN0444	II	Explosive 1.4D			62	None	Forbidden	75kg	E	5	1E, 7E
	Charges, explosive, commercial *without detonator.*	1.4S	UN0445	II	Explosive 1.4S			62	None	25kg	100kg	A	1, 2	1E, 7E, 9E
	Charges, propelling, for cannon	1.2C	UN0414	II	Explosive 1.2C			62	None	Forbidden	Forbidden	E	5	1E, 5E
	Charges, propelling, for cannon	1.3C	UN0242	II	Explosive 1.3C			62	None	Forbidden	Forbidden	B	5	1E, 5E
	Charges, propelling, for cannon	1.1C	UN0279	II	Explosive 1.1C			62	None	Forbidden	Forbidden	B	5	1E, 5E
	Charges, propelling, for rocket motors.	1.1C	UN0271	II	Explosive 1.1C			62	None	Forbidden	Forbidden	B	5	1E, 5E
	Charges, propelling, for rocket motors.	1.3C	UN0272	II	Explosive 1.3C			62	None	Forbidden	Forbidden	E	5	1E, 5E
	Charges, propelling, for rocket motors.	1.2C	UN0415	II	Explosive 1.2C			62	None	Forbidden	Forbidden	B	5	1E, 5E
	Charges, propelling, for rocket motors, *composite mixture.*	1.1C	UN0273	II	Explosive 1.1C			62	None	Forbidden	Forbidden	B	5	1E, 5E
	Charges, propelling, for rocket motors, *composite mixture.*	1.3C	UN0274	II	Explosive 1.3C			62	None	Forbidden	Forbidden	E	5	1E, 7E
	Charges, propelling, for rocket motors, *composite mixture.*	1.2C	UN0416	II	Explosive 1.2C			62	None	Forbidden	Forbidden	B	5	1E, 5E
	Charges, shaped, commercial *without detonator.*	1.2D	UN0439	II	Explosive 1, 2D			62	None	Forbidden	Forbidden	B	5	1E, 7E
	Charges, shaped, commercial *without detonator.*	1.4D	UN0440	II	Explosive 1.4D			62	None	Forbidden	75kg	E	5	1E; 7E
	Charges, shaped, commercial *without detonator.*	1.4S	UN0441	II	Explosive 1.4S			62	None	25kg	100kg	A	1, 2	1E, 7E, 9E
	Charges, shaped, commercial *without detonator.*	1.2D	UN0439	II	Explosive 1.2D			62	None	Forbidden	Forbidden	B	5	1E, 7E
	Charges, shaped, commercial, *without detonator.*	1.1D	UN0059	II	Explosive 1.1D			62	None	Forbidden	Forbidden	E	5	1E, 7E
	Charges, shaped, flexible, linear, *metal clad.*	1.4D	UN0237	II	Explosive 1.4D			62	None	Forbidden	75kg	E	5	1E, 7E
	Charges, shaped, flexible, linear, *metal clad.*	1.1D	UN0288	II	Explosive 1.1D		101	62	None	Forbidden	Forbidden	B	5	1E, 7E
	Charges, supplementary explosive	1.1D	UN0060	II	Explosive 1.1D			62	None	Forbidden	Forbidden	E	5	1E, 7E
	Components, explosive train, n.o.s.	1.2B	UN0382	II	Explosive 1.2B	101		62	None	Forbidden	Forbidden	B	5	1E, 6E
	Components, explosive train, n.o.s.	1.4B	UN0383	II	Explosive 1.4B	101		62	None	Forbidden	75kg	E	5	1E, 7E
	Components, explosive train, n.o.s.	1.4S	UN0384	II	Explosive 1.4S	101		62	None	25kg	100kg	A	1, 2	1E, 7E, 9E
	Components, explosive train, n.o.s.	1.1B	UN0461	II	Explosive 1.1B	101		62	None	Forbidden	Forbidden	B	5	1E, 5E
	Contrivances, water-activated, *with burster, expelling charge or propelling charge.*	1.2L	UN0248	II	Explosive 1.2L	101		62	None	Forbidden	Forbidden	B	5	2E, 8E
	Contrivances, water-activated, *with burster, expelling charge or propelling charge.*	1.3L	UN0249	II	Explosive 1.3L	101		62	None	Forbidden	Forbidden	B	5	2E, 8E
	Cord, detonating, *flexible*	1.1D	UN0065	II	Explosive 1.1D	102	63(a)	62	None	Forbidden	Forbidden	B	5	1E, 7E
	Cord, detonating, *flexible*	1.4D	UN0289	II	Explosive 1.4D		F	62	None	Forbidden	75kg	E	5	1E, 7E
	Cord (Fuse), detonating, *metal clad*	1.2D	UN0102	II	Explosive 1.2D			62	None	Forbidden	Forbidden	B	5	1E, 7E
	Cord (Fuse), detonating, *metal clad*	1.1D	UN0290	II	Explosive 1.1D			62	None	Forbidden	Forbidden	B	5	1E, 7E

Symbols	Hazardous materials descriptions and proper shipping names	Hazard class	Identification Numbers	Packing group	Labels	Special provisions	(8) Packaging authorizations (§ 173.***)			(9) Quantity limitations		(10) Vessel stowage requirements		
							Exceptions	Non-bulk packaging	Bulk packaging	Passenger aircraft or railcar	Cargo aircraft only	Cargo vessel	Passenger vessel	Other stowage provisions
(1)	(2)	(3)	(4)	(5)	(6)	(7)	(8A)	(8B)	(8C)	(9A)	(9B)	(10A)	(10B)	(10C)
	Cord (Fuse), detonating, mild effect *metal clad.*	1.4D	UN0104	II	Explosive 1.4D			62	None	Forbidden	75kg	E	5	1E, 7E,
	Cord, igniter	1.4G	UN0066	II	Explosive 1.4G			62	None	Forbidden	75kg	B	5	1E, 7E, 9E
	Cutters, cable, explosive	1.4S	UN0070	II	Explosive 1.4S			62	None	25kg	100kg	A	1, 2	1E, 7E, 9E
	Cyclotetramethylenetetranitramine; (Octogen; HMX), desensitized.	1.1D	UN0484	II	Explosive 1.1D			62	None	Forbidden	Forbidden	B	5	1E, 5E
	Cyclotetramethylenetetranitramine (HMX; Octogen), wetted *with not less than 15 percent water, by weight* or Cyclotetramethylenetetranitramine (HMX; Octogen) desensitized *witDnot less than 10 percent phlegmatizer, Dby weight.*	1.1D	UN0226	II	Explosive 1.1D			62	None	Forbidden	Forbidden	B	5	1E, 5E
	Cyclotrimethylenetrinitramine; (Cyclonite; Hexogen; RDX), desensitized.	1.1D	UN0483	II	Explosive 1.1D			62	None	Forbidden	Forbidden	B	5	1E, 5E
	Cyclotrimethylenetrinitramine (Cyclonite; Hexogen; RDX), and Cyclotetramethylenetetranitramine (HMX; Octogen) mixtures, wetted *with not less than 15 percent water, by weightr* Cyclotrimethylenetrinitramine (Cyclonite; Hexogen; RDX) and Cyclramethy*Dnetetranitramine (HMX; Octogen) mixtures desensitized with not less than 10 Dr cenDphlegmatizer, bCweight.*	1.1D	UN0391	II	Explosive 1.1D			62	None	Forbidden	Forbidden	B	5	1E, 5E
	Cyclotrimethylenetrinitramine (Cyclonite; Hexogen; RDX) wetted *with not less than 15 per cent water, by weight* or Cyclotrimethylenetrinitramine (Cyclonite; Hexogen; RDX) desensitized *with not less than 10 per cent phlegmatizer, by weight.*	1.1D	UN0072	II	Explosive 1.1D			62	None	Forbidden	Forbidden	B	5	1E, 5E
	Deflagrating metal salts of aromatic nitroderivatives, n.o.s.	1.3C	UN0132	II	Explosive 1.3C			62	None	Forbidden	75kg	E	5	1E, 5E
	Detonator assemblies, non-electric *for blasting.*	1.1B	UN0360	II	Explosive 1.1B			62	None	Forbidden	Forbidden	E	5	2E, 6E
	Detonator assemblies, non-electric, *for blasting.*	1.4B	UN0361	II	Explosive 1.4B			62	None	Forbidden	75kg	E	5	1E, 7E
	Detonators, electric, *for blasting*	1.1B	UN0030	II	Explosive 1.1B			62	None	Forbidden	Forbidden	E	5	2E, 6E
	Detonators, electric, *for blasting*	1.4B	UN0255	II	Explosive 1.4B			62	None	Forbidden	75kg	E	5	1E, 7E
	Detonators, electric *for blasting*	1.4S	UN0456	II	Explosive 1.4S			62	None	25 kg	100 kg	A	1, 2	1E, 7E, 9E
	Detonators for ammunition	1.1B	UN0073	II	Explosive 1.1B			62	None	Forbidden	Forbidden	E	5	2E, 6E
	Detonators for ammunition	1.2B	UN0364	II	Explosive 1.2B			62	None	Forbidden	Forbidden	E	5	2E, 6E

Symbols	Hazardous materials descriptions and proper shipping names	Hazard class	Identification Numbers	Packing group	Labels	Special provisions	(8) Packaging authorizations (§ 173.***)			(9) Quantity limitations		(10) Vessel stowage requirements		
							Exceptions	Non-bulk packaging	Bulk packaging	Passenger aircraft or railcar	Cargo aircraft only	Cargo vessel	Passenger vessel	Other stowage provisions
(1)	(2)	(3)	(4)	(5)	(6)	(7)	(8A)	(8B)	(8C)	(9A)	(9B)	(10A)	(10B)	(10C)
	Detonators for ammunition	1.4B	UN0365	II	Explosive 1.4B			62	None	Forbidden	75kg	E	5	1E, 7E
	Detonators for ammunition	1.4S	UN0366	II	Explosive 1.4S			62	None	25kg	100kg	A	1, 2	1E, 7E, 9E
	Detonators, non-electric, *for blasting.*	1.1B	UN0029	II	Explosive 1.1B			62	None	Forbidden	Forbidden	B	5	2E, 6E
	Detonators, non-electric, *for blasting.*	1.4B	UN0267	II	Explosive 1.4B			62	None	Forbidden	75kg	E	5	1E, 7E
	Detonators, non-electric *for blasting*	1.4S	UN0455	II	Explosive 1.4S			62	None	25 kg	100 kg	A	1, 2	1E, 7E, 9E
	Diazodinitrophenol, *wetted with not less than 40 per cent water, by weight, or mixture of alcohol and water.*	1.1A	UN0074	II	Explosive 1.1A	111		62	None	Forbidden	Forbidden	B	5	2E, 6E
	Diethylene glycol dinitrate, desensitized *with not less than 25 per cent non-volatile water-insoluble phlegmatizer, by weight.*	1.1D	UN0075	II	Explosive 1.1D			62	None	Forbidden	Forbidden	B	5	1E, 4E, 21E
	Dinitrophenolates (*alkali metals*), *dry or wetted with less than 15 per cent water, by weight.*	1.3C	UN0077	II	Explosive 1.3C			62	None	Forbidden	Forbidden	E	5	1E, 5E
	Dinitrophenol, *dry or wetted with less than 15 per cent water, by weight.*	1.1D	UN0076	II	Explosive 1.1D			62	None	Forbidden	Forbidden	B	5	1E, 5E, 18E
	Dinitroresorcinol, *dry or wetted with less than 15 per cent water, by weight.*	1.1D	UN0078	II	Explosive 1.1D			62	None	Forbidden	Forbidden	B	5	1E, 5E, 18E
	Dinitrosobenzene	1.3C	UN0406	II	Explosive 1.3C			62	None	Forbidden	Forbidden	E	5	1E, 5E
	Dipicryl sulfide, *dry or wetted with less than 10 per cent water, by weight.*	1.1D	UN0401	II	Explosive 1.1D			62	None	Forbidden	Forbidden	B	5	1E, 5E
	Explosive, blasting, type A	1.1D	UN0081	II	Explosive 1.1D			62	None	Forbidden	Forbidden	B	5	1E, 5E, 11E, 17E, 21E
	Explosive, blasting, type B	1.1D	UN0082	II	Explosive 1.1D			62	None	Forbidden	Forbidden	B	5	1E, 5E, 17E
	Explosive, blasting, type B	1.5D	UN0331	II	Explosive 1.5D	105,106		62	None	Forbidden	Forbidden	A	1, 2	1E, 5E, 17E
	Explosive, blasting, type C	1.1D	UN0083	II	Explosive 1.1D			62	None	Forbidden	Forbidden	B	5	1E, 5E, 22E
	Explosive, blasting, type D	1.1D	UN0084	II	Explosive 1.1D			62	None	Forbidden	Forbidden	B	5	1E, 5E
	Explosive, blasting, type E	1.1D	UN0241	II	Explosive 1.1D			62	None	Forbidden	Forbidden	B	5	1E, 5E, 17E
	Explosive, blasting, type E	1.5D	UN0332	II	Explosive 1.5D	105,106		62	None	Forbidden	Forbidden	A	1, 2	1E, 5E
D	Explosive pest control devices	1.1E	NA0006	II	Explosive 1.1E			62	None	Forbidden	Forbidden	E	5	1E, 7E, 5E
D	Explosive pest control devices	1.4E	NA0412	II	Explosive 1.4E			62	None	Forbidden	75 kg	E	5	1E, 7E
	Fireworks	1.1G	UN0333	II	Explosive 1.1G	108		62	None	Forbidden	Forbidden	E	5	1E, 7E, 19E

Symbols	Hazardous materials descriptions and proper shipping names	Hazard class	Identification Numbers	Packing group	Labels	Special provisions	(8) Packaging authorizations (§ 173.***)			(9) Quantity limitations		(10) Vessel stowage requirements		
							Exceptions	Non-bulk packaging	Bulk packaging	Passenger aircraft or railcar	Cargo aircraft only	Cargo vessel	Passenger vessel	Other stowage provisions
(1)	(2)	(3)	(4)	(5)	(6)	(7)	(8A)	(8B)	(8C)	(9A)	(9B)	(10A)	(10B)	(10C)
	Fireworks	1.2G	UN0334	II	Explosive 1.2G	108		62	None	Forbidden	Forbidden	E	5	1E, 7E, 19E
	Fireworks	1.3G	UN0335	II	Explosive 1.3G	108		62	None	Forbidden	Forbidden	A	1, 3	1E, 7E, 9E, 19E
	Fireworks	1.4G	UN0336	II	Explosive 1.4G	108		62	None	Forbidden	75kg	A	1, 3	1E, 7E, 9E
	Fireworks	1.4S	UN0337	II	Explosive 1.4S	108		62	None	25kg	100kg	A	1, 3	1E, 7E, 9E
	Flares, aerial	1.3G	UN0093	II	Explosive 1.3G			62	None	Forbidden	75kg	A	1, 3	1E, 7E, 9E
	Flares, aerial	1.4G	UN0403	II	Explosive 1.4G			62	None	Forbidden	75kg	A	1, 3	1E, 7E, 9E
	Flares, aerial	1.4S	UN0404	II	Explosive 1.4S			62	None	25kg	100kg	A	1, 3	1E, 7E, 9E
	Flares, aerial	1.1G	UN0420	II	Explosive 1.1G			62	None	Forbidden	Forbidden	B	1, 5	1E, 7E, 9E
	Flares, aerial	1.2G	UN0421	II	Explosive 1.2G			62	None	Forbidden	Forbidden	B	1, 5	1E, 7E, 9E
xD	Flares surface	1.1G	UN0418	II	Explosive 1.1G			62	None	Forbidden	Forbidden	B	1, 5	1E, 7E, 9E
	Flares, surface	1.2G	UN0419	II	Explosive 1.2G			62	None	Forbidden	Forbidden	B	1, 5	1E, 7E, 9E
	Flares, surface	1.3G	UN0092	II	Explosive 1.3G			62	None	Forbidden	75kg	A	1, 3	1E, 7E, 9E
	Fracturing devices, explosive, *for oil wells.*	1.1D	UN0099	II	Explosive 1.1D			62	None	Forbidden	Forbidden	E	5	1E, 7E
	Fuse, igniter *tubular metal clad*	1.4G	UN0103	II	Explosive 1.4G			62	None	Forbidden	75kg	A	1, 3	1E, 7E, 9E
	Fuse, instantaneous, non-detonating.	1.3G	UN0101	II	Explosive 1.3G			62	None	Forbidden	Forbidden	A	1, 3	1E, 7E, 9E
	Fuse, safety	1.4S	UN0105	II	Explosive 1.4S			62	None	25kg	100kg	A	3	1E, 7E, 9E
	Fuzes, detonating	1.1B	UN0106	II	Explosive 1.1B			62	None	Forbidden	Forbiddne	E	5	2E, 6E
	Fuzes, detonating	1.2B	UN0107	II	Explosive 1.2B			62	None	Forbidden	Forbidden	E	5	2E, 6E
	Fuzes, detonating	1.4B	UN0257	II	Explosive 1.4B			62	None	Forbidden	75kg	E	5	1E, 7E
	Fuzes, detonating	1.4S	UN0367	II	Explosive 1.4S			62	None	25kg	100kg	A	1, 2	1E, 7E, 9E
	Fuzes, detonating, *with protective features.*	1.1D	UN0408	II	Explosive 1.1D			62	None	Forbidden	Forbidden	E	5	1E, 7E
	Fuzes, detonating, *with protective features.*	1.2D	UN0409	II	Explosive 1.2D			62	None	Forbidden	Forbidden	E	5	1E, 7E
	Fuzes, detonating, *with protective features.*	1.4D	UN0410	II	Explosive 1.4D			62	None	Forbidden	75kg	E	5	1E, 7E
	Fuzes, igniting	1.3G	UN0316	II	Explosive 1.3G			62	None	Forbidden	Forbidden	E	5	1E, 7E
	Fuzes, igniting	1.4G	UN0317	II	Explosive 1.4G			62	None	Forbidden	75kg	A	1, 2	1E, 7E
	Fuzes, igniting	1.4S	UN0368	II	Explosive 1.4S			62	None	25kg	100kg	A	1, 2	1E, 7E, 9E
	Grenades, *hand or rifle, with bursting charge.*	1.1D	UN0284	II	Explosive 1.1D		63(b)	62	None	Forbidden	Forbidden	E	5	1E, 7E

Symbols	Hazardous materials descriptions and proper shipping names	Hazard class	Identification Numbers	Packing group	Labels	Special provisions	(8) Packaging authorizations (§ 173.***)			(9) Quantity limitations		(10) Vessel stowage requirements		
							Exceptions	Non-bulk packaging	Bulk packaging	Passenger aircraft or railcar	Cargo aircraft only	Cargo vessel	Passenger vessel	Other stowage provisions
(1)	(2)	(3)	(4)	(5)	(6)	(7)	(8A)	(8B)	(8C)	(9A)	(9B)	(10A)	(10B)	(10C)
	Grenades, *hand or rifle, with bursting charge.*	1.2D	UN0285	II	Explosive 1.2D		63(b)	62	None	Forbidden	Forbidden	E	5	1E, 7E
	Grenades, *hand or rifle, with bursting charge.*	1.1F	UN0292	II	Explosive 1.1F		63(b)	62	None	Forbidden	Forbidden	E	5	1E, 7E
	Grenades, *hand or rifle, with bursting charge.*	1.2F	UN0293	II	Explosive 1.2F		63(b)	62	None	Forbidden	Forbidden	E	5	1E, 7E
	Grenades practice	1.4G	UN0452	II	Explosive 1.4G		63(b)	62	None	Forbidden	75kg	E	5	1E, 7E
	Grenades, practice, *hand or rifle*	1.4S	UN0110	II	Explosive 1.4S		63(b)	62	None	25kg	100kg	A	1, 2	1E, 7E, 9E
	Grenades, practice, *hand or rifle*	1.3G	UN0318	II	Explosive 1.3G		63(b)	62	None	Forbidden	Forbidden	E	5	1E, 7E
	Grenades, practice, *hand or rifle*	1.2G	UN0372	II	Explosive 1.2G		63(b)	62	None	Forbidden	Forbidden	E	5	1E, 7E
	Guanyl nitrosaminoguanylidene hydrazine, *wetted with not less than 30 per cent water, by weight.*	1.1A	UN0113	II	Explosive 1.1A	111		62	None	Forbidden	Forbidden	B	5	2E, 6E
	Guanyl nitrosaminoguanyltetrazene (Tetrazene), *wetted with not less than 30 per cent water by weight, or mixture of alcohol and water.*	1.1A	UN0114	II	Explosive 1.1A	111		62	None	Forbidden	Forbidden	B	5	2E, 6E
	Hexanitrodiphenylamine (Dipicrylamine; Hexyl).	1.1D	UN0079	II	Explosive 1.1D			62	None	Forbidden	Forbidden	B	5	1E, 5E
	Hexanitrostilbene	1.1D	UN0392	II	Explosive 1.1D			62	None	Forbidden	Forbidden	B	5	1E, 4E, 10E
	Hexatonal, cast	1.1D	UN0393	II	Explosive 1.1D			62	None	Forbidden	Forbidden	B	5	1E, 5E
	Hexolite, *dry or wetted with less than 15 per cent water, by weight.*	1.1D	UN0118	II	Explosive 1.1D			62	None	Forbidden	Forbidden	B	5	1E, 5E
	Igniters	1.1G	UN0121	II	Explosive 1.1G			62	None	Forbidden	Forbidden	E	5	1E, 7E
	Igniters	1.2G	UN0314	II	Explosive 1.2			62	None	Forbidden	Forbidden	E	5	1E, 7E
	Igniters	1.3G	UN0315	II	Explosive 1.3G			62	None	Forbidden	Forbidden	E	5	1E, 7E
	Igniters	1.4G	UN0325	II	Explosive 1.4G			62	None	Forbidden	75kg	A	1, 3	1E, 7E
	Jet perforating guns, charged *oil well, without detonator.*	1.1D	UN0124	II	Explosive 1.D			63(g) 62	None	Forbidden	Forbidden	B	5	1E, 7E, 9E
D	Jet perforating guns, charged *oil well, without detonator.*	1.4D	NA0124	II	Explosive 1.4D	114	63 (g)	62	None	Forbidden	Forbidden	E	5	1E, 7E
	Lead azide, *wetted with not less than 20 per cent water, by weight, or mixture of alcohol and water.*	1.1A	UN0129	II	Explosive 1.1A	111		62	None	Forbidden	Forbidden	B	5	2E, 6E
D	Lead mononitroresorcinate	1.1A	NA0473	II	Explosive 1.1A	111		62	None	Forbidden	Forbidden	B	5	2E, 6E
	Lead styphnate (Lead trinitroresorcinate), *wetted Δwith not less than 20 per cent water, by weight (or mixture of alcohol and water).*	1.1A	UN0130	II	Explosive 1.1A	111		62	None	Forbidden	Forbidden	B	5	2E, 6E
	Lighters, fuse	1.4S	UN0131	II	Explosive 1.4S			62	None	25kg	100kg	A	1,	1E, 7E, 9E
D	Mannitol hexanitrate (Nitromannite), wetted *with not less than 40 per cent water, by weight or mixture of alcohol and water.*	1.1A	NA0133	II	Explosive 1.1A	111		62	None	Forbidden	Forbidden	B	5	1E, 5E

Symbols	Hazardous materials descriptions and proper shipping names	Hazard class	Identification Numbers	Packing group	Labels	Special provisions	(8) Packaging authorizations (§ 173.***)			(9) Quantity limitations		(10) Vessel stowage requirements		
							Exceptions	Non-bulk packaging	Bulk packaging	Passenger aircraft or railcar	Cargo aircraft only	Cargo vessel	Passenger vessel	Other stowage provisions
(1)	(2)	(3)	(4)	(5)	(6)	(7)	(8A)	(8B)	(8C)	(9A)	(9B)	(10A)	(10B)	(10C)
	Mannitol hexanitrate (Nitromannite), wetted *with not less than 40 percent water, by weight or mixture of alcohol and water.*	1.1D	UN0133	II	Explosive 1.1D	111		62	None	Forbidden	Forbidden	B	5	1E, 5E
	5-Mercapto-tetrazol-1-acetic acid	1.4C	UN0448	II	Explosive 1.4C			62	None	Forbidden	75kg	B	5	1E, 5E
	Mercury fulminate, wetted *with not less than 20 percent water, or mixture of alcohol and water, by weight.*	1.1A	UN0135	II	Explosive 1.1A	111		62	None	Forbidden	Forbidden	B	5	2E, 6E
	Mines *with bursting charge*	1.1F	UN0136	II	Explosive 1.1F		63(b)	62	None	Forbidden	Forbidden	E	5	2E, 7E
	Mines *with bursting charge*	1.1D	UN0137	II	Explosive 1.1D		63(b)	62	None	Forbidden	Forbidden	E	5	1E, 7E
	Mines *with bursting charge*	1.2D	UN0138											
	Mines *with bursting charge*	1.2F	UN0294	II	Explosive 1.2F		63(b)	62	None	Forbidden	Forbidden	E	5	3E, 7E
	5-Nitrobenzotriazol	1.1D	UN0385	II	Explosive 1.1D			62	None	Forbidden	Forbidden	B	5	3E, 7E
	Nitrocellulose, *dry or wetted with less than 25 percent water (or alcohol), by weight.*	1.1D	UN0340	II	Explosive 1.1D			62	None	Forbidden	Forbidden	B	5	1E, 5E
	Nitrocellulose, plasticized *with not less than 18 percent plasticizing substance, by weight.*	1.3C	UN0343	II	Explosive 1.3C			62	None	Forbidden	Forbidden	E	5	1E, 5E
	Nitrocellulose, *unmodified or plasticized with less than 18 percent plasticizing substance, by weight.*	1.1D	UN0341	II	Explosive 1.1D			62	None	Forbidden	Forbidden	B	5	1E, 5E
	Nitrocellulose, wetted *with not less than 25 percent alcohol, by weight.*	1.3C	UN0342	II	Explosive 1.3C			62	None	Forbidden	Forbidden	E	5	1E, 5E
	Nitroglycerin, desensitized *with not less than 40 percent non-volatile water insoluble phlegmatizer, by weight.*	1.1D	UN0143	II	Explosive 1.1D			62	None	Forbidden	Forbidden	B	5	1E, 4E
	Nitroglycerin, solution in alcohol, *with more than 1 percent but not more than 10 percent nitroglycerin.*	1.1D	UN0144	II	Explosive 1.1D			62	None	Forbidden	Forbidden	B	5	1E, 5E, 21E
	Nitroguanidine (Picrite), *dry or wetted with less than 20 percent water, by weight.*	1.1D	UN0282	II	Explosive 1.1D			62	None	Forbidden	Forbidden	B	5	1E, 5E
	Nitrostarch, *dry or wetted with less than 20 percent water, by weight.*	1.1D	UN0146	II	Explosive 1.1D			62	None	Forbidden	Forbidden	B	5	1E, 5E
	Nitro urea	1.1D	UN0147	II	Explosive 1.1D			62	None	Forbidden	Forbidden	B	5	1E, 5E
	Octolite (Octol), *dry or wetted with less than 15 percent water, by weight.*	1.1D	UN0266	II	Explosive 1.1D	104		62	None	Forbidden	Forbidden	B	5	1E, 5E

Symbols	Hazardous materials descriptions and proper shipping names	Hazard class	Identification Numbers	Packing group	Labels	Special provisions	(8) Packaging authorizations (§ 173.***)			(9) Quantity limitations		(10) Vessel stowage requirements		
							Exceptions	Non-bulk packaging	Bulk packaging	Passenger aircraft or railcar	Cargo aircraft only	Cargo vessel	Passenger vessel	Other stowage provisions
(1)	(2)	(3)	(4)	(5)	(6)	(7)	(8A)	(8B)	(8C)	(9A)	(9B)	(10A)	(10B)	(10C)
D	Pentaerythrite tetranitrate (Pentaerythritol tetranitrate; PETN) wetted *with not less than 25 percent water, by weight, or* Pentaerythrite tetranitrate (Pentaerythritol tetranitrate ; PETN) desensitized *with not less than 15 percent phlegmatizer by weight.*	1.1D	NA0150	II	Explosive 1.1A	111		62	None	Forbidden	Forbidden	B	5	1E, 5E
	Pentaerythrite tetranitrate (PETN) *with not less than 7 percent wax by weight.*	1.1D	UN0411	II	Explosive 1.1D			62	None	Forbidden	Forbidden	B	5	1E, 5E
	Pentolite, *dry or wetted with less than 15 percent water, by weight.*	1.1D	UN0151	II	Explosive 1.1D			62	None	Forbidden	Forbidden	B	5	1E, 5E
	Flash powder	1.1G	UN0094	II	Explosive 1.1G			62	None	Forbidden	Forbidden	B	5	1E, 5E
	Photo-flash powder, *in units*	1.2G	UN0096											
	Flash powder	1.3G	UN0305	II	Explosive 1.3G			62	None	Forbidden	Forbidden	E	5	1E, 5E
	Potassium salts of aromatic nitroderivatives, *explosive-*.	1.3C	UN0158	II	Explosive 1.3C			62	None	Forbidden	Forbidden	E	5	1E, 5E, 21E
	Powder cake (powder paste) wetted *with not less than 35-percent water, by weight.*	1.3C	UN0159	II	Explosive 1.3C			62	None	Forbidden	Forbidden	E	5	1E, 21E, 5E
	Powder cake; (powder paste) wetted *with not less than 17 percent alcohol by weight.*	1.1C	UN0433	II	Explosive 1.1C			62	None	Forbidden	Forbidden	B	5	1E, 5E, 21E
	Powder, smokeless	1.1C	UN0160	II	Explosive 1.1C			62	None	Forbidden	Forbidden	B	5	1E, 4E, 10E
	Powder, smokeless	1.3C	UN0161	II	Explosive 1.3C		63(c)	62	None	Forbidden	Forbidden	E	5	1E, 4E, 10E
	Primers, cap type	1.4S	UN0044	II	Explosive 1.4S			62	None	25 kg	100 kg	A	1, 2	1E, 7E, 9E
	Primers, cap type	1.1B	UN0377	II	Explosive 1.1B			62	None	Forbidden	Forbidden	E	5	2E, 6E
	Primers, cap type	1.4B	UN0378	II	Explosive 1.4B			62	None	Forbidden	Forbidden	E	5	1E, 7E
	Primers, tubular	1.3G	UN0319	II	Explosive 1.3G			62	None	Forbidden	Forbidden	E	5	1E, 7E
	Primers, tubular	1.4G	UN0320	II	Explosive 1.4G			62	None	Forbidden	75 kg	E	5	1E, 7E
	Primers, tubular	1.4S	UN0376	II	Explosive 1.4S			62	None	25 kg	100kg	A	1, 2	1E, 7E, 9E
	Projectiles, *inert with tracer*	1.45	UN0345	II	Explosive 1.45		63(b)	62	None	25kg	100kg	A	1, 2	1E, 7E, 9E
	Projectiles, *inert, with tracer*	1.3G	UN0424	II	Explosive 1.3G		63(b)	62	None	Forbidden	Forbidden	E	5	1E, 7E
	Projectiles, *inert, with tracer*	1.4G	UN0425	II	Explosive 1.4G		63(b)	62	None	Forbidden	75kg	A	1, 2	1E, 7E
	Projectiles, *with burster or expelling charge.*	1.2D	UN0346	II	Explosive 1.2D		63(b)	62	None	Forbidden	Forbidden	E	5	1E, 7E
	Projectiles, *with burster or expelling charge.*	1.4D	UN0347	II	Explosive 1.4D		63(b)	62	None	Forbidden	75kg	A	1, 2	1E, 7E
	Projectiles, *with burster or expelling charge.*	1.2F	UN0426	II	Explosive 1.2F		63(b)	62	NOne	Forbidden	Forbidden	E	5	1E, 7E
	Projectiles, *with burster or expelling charge.*	1.4F	UN0427	II	Explosive 1.4F		63(b)	62	None	Forbidden	Forbidden	E	5	1E, 7E
	Projectiles, *with burster or expelling charge.*	1.2G	UN0434	II	Explosive 1.2G		63(b)	62	None	Forbidden	Forbidden	E	5	1E, 7E

Symbols	Hazardous materials descriptions and proper shipping names	Hazard class	Identification Numbers	Packing group	Labels	Special provisions	(8) Packaging authorizations (§ 173.***)			(9) Quantity limitations		(10) Vessel stowage requirements		
							Exceptions	Non-bulk packaging	Bulk packaging	Passenger aircraft or railcar	Cargo aircraft only	Cargo vessel	Passenger vessel	Other stowage provisions
(1)	(2)	(3)	(4)	(5)	(6)	(7)	(8A)	(8B)	(8C)	(9A)	(9B)	(10A)	(10B)	(10C)
	Projectiles, *with burster or expelling charge.*	1.4G	UN0435	II	Explosive 1.4G		63(b)	62	None	Forbidden	75kg	E	5	1E, 7E
	Projectiles, *with bursting charge*	1.1F	UN0167	II	Explosive 1.1F		63(b)	62	None	Forbidden	Forbidden	E	5	1E, 7E
	Projectiles, *with bursting charge*	1.1D	UN0168	II	Explosive 1.1D		63(b)	62	None	Forbidden	Forbidden	E	5	1E, 7E
	Projectiles, *with bursting charge*	1.2D	UN0169	II	Explosive 1.2D		63(b)	62	None	Forbidden	Forbidden	E	5	1E, 7E
	Projectiles, *with bursting charge*	1.2F	UN0324	II	Explosive 1.2F		63(b)	62	None	Forbidden	Forbidden	E	5	1E, 7E
	Projectiles, *with bursting charge*	1.4D	UN0344	II	Explosive 1.4D		63(b)	62	None	Forbidden	75kg	E	5	1E, 7E
D	Propellant explosive, liquid	1.1C	NA0273	II	Explosive 1.1C			62	None	Forbidden	Forbidden	B	5	1E, 5E
D	Propellant explosive, liquid	1.3C	NA0274	II	Explosive 1.3C			62	None	Forbidden	Forbidden	B	5	1E, 5E
	Propellant explosive, liquid	1.1C	NA0474	II	Explosive 1.1C			62	None	Forbidden	Forbidden	B	5	1E, 5E
D	Propellant explosive, liquid	1.3C	NA0477	II	Explosive 1.3C			62	None	Forbidden	Forbidden	B	5	1E, 5E
	Release devices, explosive	1.4S	UN0173	II	Explosive 1.4S			62	None	25kg	100kg	A	1, 2	1E, 7E, 9E
	Rivets, explosive	1.4S	UN0174	II	Explosive 1.4S			62	None	25kg	100kg	A	1, 2	1E, 7E, 9E
	Rocket motors	1.3C	UN0186	II	Explosive 1.3C	109	63(d)	62	None	Forbidden	Forbidden	E	5	1E, 7E
	Rocket motors	1.1C	UN0280	II	Explosive 1.1C	109	63(d)	62	None	Forbidden	Forbidden	E	5	1E, 7E
	Rocket motors	1.2C	UN0281	II	Explosive 1.2C	109	63(d)	62	None	Forbidden	Forbidden	E	5	1E, 7E
	Rocket motors, liquid fueled	1.2J	UN0395	II	Explosive 1.2J	109	63(d),63 (e)	62	None	Forbidden	Forbidden	E	5	7E, 14E, 16E
	Rocket motors, liquid fueled	1.3J	UN0396	II	Explosive 1.3J	109	63(d),63 (e)	62	None	Forbidden	Forbidden	E	5	7E, 13E, 16E
	Rocket motors *with hypergolic liquids, with or without an expelling charge.*	1.3L	UN0250	II	Explosive 1.3L	109	63(d)	62	None	Forbidden	Forbidden	B	5	7E, 14E, 16E
	Rocket motors *with hypergolic liquids, with or without an expelling charge.*	1.2L	UN0322	II	Explosive 1.2L	109	63(d)		None	Forbidden	Forbidden	B	5	7E, 14E, 16E
	Rockets, line throwing	1.4G	UN0453	II	Explosive 1.4G			62	None	Forbidden	75 kg	E	5	1E, 7E, 9E
	Rockets, line-throwing	1.2G	UN0238											
	Rockets, line-throwing	1.3G	UN0240	II	Explosive 1.3G			62	None	Forbidden	75 kg	E	5	1E, 7E, 9E
	Rockets, liquid fueled *with bursting charge.*	1.2J	UN0398	II	Explosive 1.2J			62	None	Forbidden	Forbidden	E	5	7E, 14E, 16E
	Rockets, liquid-fueled *with bursting charge.*	1.1J	UN0397	II	Explosive 1.1J			62	None	Forbidden	Forbidden	E	5	7E, 14E, 16E
	Rockets, *with bursting charge*	1.1F	UN0180											
	Rockets, *with bursting charge*	1.1E	UN0181	II	Explosive 1.1E			62	None	Forbidden	Forbidden	E	5	1E, 7E
	Rockets, *with bursting charge*	1.2E	UN0182	II	Explosive 1.2E			62	None	Forbidden	Forbidden	E	5	1E, 7E
	Rockets, *with bursting charge*	1.2F	UN0295	II	Explosive 1.2F			62	None	Forbidden	Forbidden	E	5	1E, 7E
	Rockets, *with expelling charge*	1.2C	UN0436	II	Explosive 1.2C			62	None	Forbidden	Forbidden	E	5	1E, 7E
	Rockets, *with expelling charge*	1.3C	UN0437	II	Explosive 1.3C			62	None	Forbidden	Forbidden	E	5	1E, 7E
	Rockets, *with expelling charge*	1.4C	UN0438	II	Explosive 1.4C			62	None	Forbidden	75 kg	E	5	1E, 7E
	Rockets, *with inert head*	1.3C	UN0183	II	Explosive 1.3C			62	None	Forbidden	Forbidden	A	1, 3	1E, 7E
	Signal devices, hand	1.4G	UN0191	II	Explosive 1.4G			62	None	Forbidden	75kg	A	1, 3	1E, 7E, 9E
	Signal devices, hand	1.4S	UN0373	II	Explosive 1.4S			62	None	25 kg	100 kg	A	1, 3	1E, 7E, 9E
	Signals, railway track, explosive	1.1G	UN0192	II	Explosive 1.1G			62	None	Forbidden	Forbidden	B	1,5	1E, 7E

Symbols	Hazardous materials descriptions and proper shipping names	Hazard class	Identification Numbers	Packing group	Labels	Special provisions	(8) Packaging authorizations (§ 173.***)			(9) Quantity limitations		(10) Vessel stowage requirements		
							Exceptions	Non-bulk packaging	Bulk packaging	Passenger aircraft or railcar	Cargo aircraft only	Cargo vessel	Passenger vessel	Other stowage provisions
(1)	(2)	(3)	(4)	(5)	(6)	(7)	(8A)	(8B)	(8C)	(9A)	(9B)	(10A)	(10B)	(10C)
	Signals, railway track, explosive	1.4S	UN0193	II	Explosive 1.4S			62	None	25 kg	100 kg	A	1, 3	1E, 7E
	Signals, ship distress (*other than water-activated contrivances*).	1.1G	UN0194	II	Explosive 1.1G			62	None	Forbidden	Forbidden	E	5	1E, 5E, 7E
	Signals, ship distress (*other than water-activated contrivances*).	1.3G	UN0195	II	Explosive 1.3G			62	None	Forbidden	75 kg	A	1, 3	1E, 7E, 9E
	Signals, smoke *with explosive sound unit.*	1.1G	UN0196	II	Explosive 1.1G			62	None	Forbidden	Forbidden	E	5	1E, 7E, 9E
	Signals, smoke *with explosive sound unit.*	1.2G	UN0313	II	Explosive 1.2G			62	None	Forbidden	Forbidden	E	5	1E, 7E, 9E
	Signals, smoke *without explosive sound unit.*	1.4G	UN0197	II	Explosive 1.4G			62	None	Forbidden	75kg	A	1, 3	1E, 7E, 9E
	Sodium dinitro-o-cresolate, *dry or wetted with less than 15 percent water, by weight.*	1.3C	UN0234	II	Explosive 1.3C			62	None	Forbidden	Forbidden	E	5	1E, 5E
	Sodium picramate, *dry or wetted with less than 20 per cent water, by weight.*	1.3C	UN0235	II	Explosive 1.3C			62	None	Forbidden	Forbidden	E	5	1E, 5E
	Sodium salts of aromatic nitro-derivatives, n.o.s., *explosive.*	1.3C	UN0203	II	Explosive 1.3C			62	None	Forbidden	Forbidden	E	5	1E, 5E
	Sounding devices, explosive	1.2F	UN0204	II	Explosive 1.2F			62	None	Forbidden	Forbidden	E	5	1E, 7E
	Sounding devices, explosive	1.1F	UN0296	II	Explosive 1.1F			62	None	Forbidden	Forbidden	E	5	1E, 7E
	Sounding devices, explosive	1.1D	UN0374	II	Explosive 1.1D			62	None	Forbidden	Forbidden	E	5	1E, 7E
	Sounding devices, explosive	1.2D	UN0375	II	Explosive 1.2D			62	None	Forbidden	Forbidden	E	5	1E, 7E
	Squibs	1.4B	UN0422	II	Explosive 1.4B									
	Squibs	1.4G	UN0423						D					
	Squibs, *including electric squibs and safety squibs.*	1.4S	UN0206											
	Substances, explosive, n.o.s.	1.1L	UN0357	II	Explosives 1.1L	101		62	None	Forbidden	Forbidden	E	5	12E
	Substances, explosive, n.o.s.	1.2L	UN0358	II	Explosive 1.2L	101		62	None	Forbidden	Forbidden	E	5	12E
	Substances, explosive, n.o.s.	1.3L	UN0359											
	Substances, explosive, n.o.s.	1.1A	UN0473	II	Explosive 1.1A	101, 111		62	None	Forbidden	Forbidden	B	5	2E, 6E
	Substances, explosive, n.o.s.	1.1C	UN0474	II	Explosive 1.1C	101		62	None	Forbidden	Forbidden	B	5	1E, 5E
	Substances, explosive, n.o.s.	1.1D	UN0475	II	Explosive 1.1D	101		62	None	Forbidden	Forbidden	E	5	1E, 7E
	Substances, explosive, n.o.s.	1.1G	UN0476	II	Explosive 1.1G	101		62	None	forbidden	Forbidden	B	5	1E, 5E, 11E
	Substances, explosive, n.o.s.	1.1C	UN0477	II	Explosive 1.1C	101		62	None	Forbidden	Forbidden	B	5	1E, 5E
	Substances, explosive, n.o.s.	1.3G	UN0478	II	Explosive 1.3G	101		62	None	Forbidden	Forbidden	B	5	1E, 5E, 11E
	Substances, explosive, n.o.s.	1.4C	UN0479	II	Explosive 1.4C	101		62	None	Forbidden	Forbidden	B	5	1E, 5E
	Substances, explosive, n.o.s.	1.4D	UN0480	II	Explosive 1.4D	101		62	None	Forbidden	Forbidden	B	5	1E, 7E
	Substances, explosive, n.o.s.	1.4S	UN0481	II	Explosive 1.4S	101		62	None	25kg	100kg	A	1,2	1E, 7E, 9E
	Substances, explosive, n.o.s.	1.5D	UN0482	II	Explosive 1.5D	101		62	None	Forbidden	Forbidden	E	5	1E, 7E
	Substances, explosive, n.o.s.	1p												
	Tetranitroaniline	1.1D	UN0207	II	Explosive 1.1D			62	None	Forbidden	Forbidden	B	5	1E, 7E
	Tetrazol-1-acetic acid	1.4C	UN0407	II	Explosive 1.4C			62	None	Forbidden	75kg	E	5	1E, 5E
	Torpedoes, liquid fuelled, *with inert head.*	1.3J	UN0450	II	Explosive 1.3J		63(b)	62	None	Forbidden	Forbidden	E	5	7E, 14, 16E
	Torpedoes, liquid fuelled, *with or without bursting charge.*	1.1J	UN0449	II	Explosives 1.1J		63B	62	None	Forbidden	Forbidden	E	5	1E, 7E

Symbols	Hazardous materials descriptions and proper shipping names	Hazard class	Identification Numbers	Packing group	Labels	Special provisions	(8) Packaging authorizations (§ 173.***)			(9) Quantity limitations		(10) Vessel stowage requirements		
							Exceptions	Non-bulk packaging	Bulk packaging	Passenger aircraft or railcar	Cargo aircraft only	Cargo vessel	Passenger vessel	Other stowage provisions
(1)	(2)	(3)	(4)	(5)	(6)	(7)	(8A)	(8B)	(8C)	(9A)	(9B)	(10A)	(10B)	(10C)
	Torpedoes *with bursting charge*	1.1E	UN0329	II	Explosive 1.1E		63(b)	62	None	Forbidden	Forbidden	E	5	1E, 7E
	Torpedoes *with bursting charge*	1.1F	UN0330	II	Explosive 1.1F		63(b)	62	None	Forbidden	Forbidden	E	5	1E, 5B
	Torpedoes *with bursting charge*	1.1D	UN0451	II	Explosive 1.1D		63(b)	62	None	Forbidden	Forbidden	E	5	1E, 7E
	Tracers for ammunition	1.3G	UN0212	II	Explosive 1.3G			62	None	Forbidden	Forbidden	E	5	7E, 14E, 16E
	Tracers for ammunition	1.4G	UN0306	II	Explosive 1.4G			62	None	Forbidden	75kg	A	1,2	1E, 7E, 20E
	Trinitroaniline	1.1D	UN0153	II	Explosive 1.1D			62	None	Forbidden	Forbidden	B	5	1E, 7E, 20E
	Trinitroanisole	1.1D	UN0213	II	Explosive 1.1D			62	None	Forbidden	Forbidden	B	5	1E, 5E
	Trinitrobenzene, *dry or wetted with less than 30 percent water, by weight.*	1.1D	UN0214	II	Explosive 1.1D			62	None	Forbidden	Forbidden	B	5	1E, 5E
	Trinitrobenzenesulfonic acid	1.1L	UN0386	II	Explosive 1.1L			62	None	Forbidden	Forbidden	B	5	1E, 5E
	Trinitrobenzoic acid, *dry or wetted with less than 30 percent water, by weight.*	1.1D	UN0215	II	Explosive 1.1D			62	None	Forbidden	Forbidden	B	5	12E
	Trinitrochlorobenzene; (Picryl chloride).	1.1D	UN0155	II	Explosive 1.1D			62	None	Forbidden	Forbidden	B	5	1E, 5E
	Trinitro-m-cresol	1.1D	UN0216	II	Explosive 1.1D			62	None	Forbidden	Forbidden	B	5	1E, 5E
	Trinitrofluorenone	1.1D	UN0387	II	Explosive 1.1D			62	None	Forbidden	Forbidden	B	5	1E, 5E
	Trinitronaphthalene	1.1D	UN0217	II	Explosive 1.1D			62	None	Forbidden	Forbidden	B	5	1E, 5E
	Trinitrophenetole	1.1D	UN0218	II	Explosive 1.1D			62	None	Forbidden	Forbidden	B	5	1E, 5E
	Trinitrophenol (Picric acid); *dry or wetted with less than 30 percent water, by weight.*	1.1D	UN0154	II	Explosive 1.1D			62	None	Forbidden	Forbidden	B	5	1E, 5E
	Trinitrophenylmethylnitramine (Tetryl).	1.1D	UN0208	II	Explosive 1.1D			62	None	Forbidden	Forbidden	B	5	1E, 4E, 10E
	Trinitroresorcinol (Styphnic acid), *dry or wetted with less than 20 percent water, by weight, or mixture of alcohol and water.*	1.1D	UN0219	II	Explosive 1.1D			62	None	Forbidden	Forbidden	B	5	1E, 5E
	Trinitroresorcinol (Styphnic acid), wetted *with not less than 20 percent water, by weight, or mixture of alcohol and water.*	1.1D	UN0394	II	Explosive 1.1D			62	None	Forbidden	Forbidden	B	5	1E, 5E
	Trinitrotoluene (TNT) and Trinitrobenzene mixtures *or* Trinitrotoluene (TNT) and Hexanitrostilbene mixtures.	1.1D	UN0388	II	Explosive 1.1D			62	None	Forbidden	Forbidden	B	5	1E, 5E
	Trinitrotoluene (TNT), *dry or wetted with less than 30 percent water, by weight.*	1.1D	UN0209	II	Explosive 1.1D			62	None	Forbidden	Forbidden	B	5	1E, 5E
	Trinitrotoluene (TNT) mixtures containing Trinitrobenzene and Hexanitrostilbene.	1.1D	UN0389	II	Explosive 1.1D			62	None	Forbidden	Forbidden	B	5	1E, 5E
	Tritonal	1.1D	UN0390	II	Explosive 1.1D			62	None	Forbidden	Forbidden	B	5	1E, 5E
	Urea nitrate, *dry or wetted with less than 20 percent water, by weight.*	1.1D	UN0220	II	Explosive 1.1D			62	None	Forbidden	Forbidden	B	5	1E, 5E

Symbols	Hazardous materials descriptions and proper shipping names	Hazard class	Identification Numbers	Packing group	Labels	Special provisions	(8) Packaging authorizations (§ 173.***)			(9) Quantity limitations		(10) Vessel stowage requirements		
							Exceptions	Non-bulk packaging	Bulk packaging	Passenger aircraft or railcar	Cargo aircraft only	Cargo vessel	Passenger vessel	Other stowage provisions
(1)	(2)	(3)	(4)	(5)	(6)	(7)	(8A)	(8B)	(8C)	(9A)	(9B)	(10A)	(10B)	(10C)
	Warheads, rocket *with burster or expelling charge.*	1.4D	UN0370	II	Explosive 1.4D			62	None	Forbidden	75kg	E	5	1E, 7E
	Warheads, rocket *with burster or expelling charge.*	1.4F	UN0371	II	Explosive 1.4F			62	None	Forbidden	Forbidden	E	5	1E, 7E
	Warheads, rocket *with bursting charge.*	1.1D	UN0286	II	Explosive 1.1D			62	None	Forbidden	Forbidden	E	5	1E, 7E
	Warheads, rocket *with bursting charge.*	1.2D	UN0287	II	Explosive 1.2D			62	None	Forbidden	Forbidden	E	5	1E, 7E
	Warheads, rocket *with bursting charge.*	1.1F	UN0369	II	Explosive 1.1F			62	None	Forbidden	Forbidden	E	5	1E, 7E
	Warheads, torpedo *with bursting charge.*	1.1D	UN0221	II	Explosive 1.1D			62	None	Forbidden	Forbidden	E	5	1E, 7E
	Zirconium picramate, *dry or wetted with less than 20 percent water, by weight.*	1.3C	UN0236	II	Explosive 1.3C			62	None	Forbidden	Forbidden	E	5	1E, 5E

7. In § 172.102(c)(1), as proposed at 52 FR 42932 on November 6, 1987, the following special provisions are added to the *Table of special provisions*, in appropriate numerical sequence:

§ 172.102 Special provisions.

* * * * *

(c) * * *

(1) * * *

Code	Special provisions
* * * * *	
101	The name of the particular substance or article must be specified.
102	The articles may be transported as in Division 1.4 Compatibility Group D (1.4D) if all of the conditions specified in § 173.63(a) are met.
105	The word "Agents" may be used instead of "Explosives" when approved by the Director, OHMT
106	The recognized name of the particular explosive may be specified in addition to the type.
107	The classification of the substance is expected to vary with the particle size.
108	Fireworks must be so constructed and packaged that loose pyrotechnic composition will not be present in packages during transportation.
109	Rocket motors must be nonpropulsive in transportation. A rocket motor to be considered "nonpropulsive" must be capable of unrestrained burning and must not appreciably move in any direction when ignited by any means.
110	Fire extinguisher charges containing 3.2 grams or less of propellant explosives per unit are not subject to the requirements of this subchapter
111	Explosive substances of Division 1.1 Compatibility Group A (1.1A) are forbidden for transportation if dry or not desensitized, unless incorporated in a device.
112	Cartridges, small arms which have been classed in Division 1.4 Compatibility Group S (1.4S) may be reclassed and offered for transportation as ORM-D material if they are packaged in accordance with § 173.63(f). Cartridges, small arms that may be shipped as ORM-D are limited to: (1) Ammunition for rifle, pistol, or shotgun; (2) Ammunition with inert projectiles or blank ammunition; and, (3) Ammunition not exceeding 50 caliber for rifle or pistol cartridges or 8 gauge for shotgun shells.
113	The sample must be given a tentative approval by an agency or laboratory in accordance with § 173.56.
114	Jet perforating guns, charged, oil well, without detonator may be reclassed to Division 1.4 Compatibility Group D (1.4D) if the following conditions are met: (1) The total weight of the explosive contents of the shaped charges assembled in the guns does not exceed 90.5 kilograms (199.5 pounds) per vehicle; and (2) The guns are packaged in accordance with Packaging Method US073.
* * * * *	

7a. Section 172.320 would be added to read as follows:

§ 172.320 Explosive hazardous materials.

Except for Class 1 materials (i.e., explosives) offered for transportation in accordance with § 173.56(e) of this subchapter, each package containing Class 1 materials must be marked with the EX-number for each substance, article or device contained therein. However, when more than five different Class 1 materials are packed in the same package, the package need not be marked with more than five of the EX-numbers.

§ 172.400 [Amended]

8. In § 172.400, as proposed at 52 FR 42938 on November 6, 1987, the table in paragraph (b) is amended by adding the following entry in numerical sequence "1.6.....EXPLOSIVE 1.6.....172.411".

9. In § 172.405, the introductory text of paragraph (a), as proposed at 52 FR 42939 on November 6, 1987, is revised to read as follows:

§ 172.405 Authorized label modifications.

(a) For Class 1, 2, 3, 4, 5, 6, or 8, text indicating the hazard class (for example, "FLAMMABLE LIQUID") is not required on a label when—

* * * * *

9a. In § 172.411, as proposed at 52 FR 42940 on November 6, 1987, the section heading, the introductory text of paragraph (c), and paragraph (d) are revised and, following the EXPLOSIVE 1.5 label, the EXPLOSIVE 1.6 label is added, as follows:

§ 172.411 EXPLOSIVE 1.1, 1.2, 1.3, 1.4, 1.5 and 1.6 labels.

* * * * *

(c) Except for size and color, the EXPLOSIVE 1.4, EXPLOSIVE 1.5 and EXPLOSIVE 1.6 must be as follows:

* * * * *

EXPLOSIVE 1.6:



(d) In addition to complying with § 172.407, the background color on the EXPLOSIVE 1.4, EXPLOSIVE 1.5 and EXPLOSIVE 1.6 labels must be orange. The "*" shall be replaced with the appropriate compatibility group letter. The compatibility group letter must be shown as a capitalized Roman letter measuring at least 12.7mm (0.5 inch) in height. Division numerals must measure at least 30mm (1.2 inches) in height and at least 5mm (0.2 inch) in width.

§ 172.504 [Amended]

10. In § 172.504, paragraph (e), as proposed at 52 FR 42944 on November 6, 1987, the entry "1.6..... Explosives 1.6..... 172.525" is added in numerical sequence to Table 2.

10a. Section 172.525 would be redesignated as § 172.526.

11. New § 172.525 would be added to read as follows:

§ 172.525 EXPLOSIVES 1.6 placard.

(a) Except for size and color the EXPLOSIVES 1.6 placard must be as follows:



(b) In addition to complying with § 172.519. the background color on the EXPLOSIVES 1.6 placard must be orange. The division numerals, 1.6, must measure at least 63.5mm (2.5 inches) in height. The text, numerals and inner border must be black.

PART 173—SHIPPERS—GENERAL REQUIREMENTS FOR SHIPMENTS AND PACKAGINGS

12. The authority citation for part 173 would continue to read as follows:

Authority: 49 U.S.C. App. 1803, 1804, 1805, 1808; 49 CFR part 1, unless otherwise noted.

13. In part 173, subpart C would be revised to read as follows:

Subpart C—Definitions, Classification and Packaging for Class 1

Sec.

173.50 Class 1—definitions.
173.51 Authorization to offer and transport explosives.
173.52 Classification codes and compatibility groups of explosives.
173.53 Provisions for using old classifications of explosives.
173.54 Forbidden explosives.
173.55 [Reserved]
173.56 New explosives—definition and procedures for classification and approval.
173.57 Acceptance criteria for new explosives.
173.58 Assignment of class and division for new explosives.
173.59 Description of terms for explosives.
173.60 General packaging requirements for explosives.
173.61 Mixed packaging requirements.
173.62 Specific packaging requirements.
173.63 Packaging exceptions.

Subpart C—Definitions, Classification and Packaging for Class 1

§ 173.50 Class 1—definitions.

(a) *Explosive.* For the purpose of this subchapter, an "explosive" means any substance or article, including a device, which is designed to function by explosion (i.e., an extremely rapid release of gas and heat) or which, by chemical reaction within itself, is able to function in a similar manner even if not designed to function by explosion, unless the substance or article is otherwise classed under the provision of this subchapter.

(b) Explosives in Class 1 are divided into six divisions as follows:

(1) *Division 1.1* consists of explosives that have a mass explosion hazard. A mass explosion is one which affects almost the entire load instantaneously.

(2) *Division 1.2* consists of explosives that have a projection hazard but not a mass explosion hazard.

(3) *Division 1.3* consists of explosives that have a fire hazard and either a minor blast hazard or a minor projection hazard or both, but not a mass explosion hazard.

(4) *Division 1.4* consists of explosive devices that present a minor explosion hazard. No device in this division may contain more than 25 grams (0.9 ounce) of a detonating material.

(5) *Division 1.5* [1] consists of very insensitive explosives. This division is comprised of substances which have a mass explosion hazard but are so insensitive that there is very little probability of initiation or of transition from burning to detonation under normal conditions of transport.

(6) *Division 1.6* [2] consists of extremely insensitive articles which do not have a mass explosive hazard. This division is comprised of articles which contain only extremely insensitive detonating substances and which demonstrate a negligible probability of accidental initiation or propagation.

[1] The probability of transition from burning to detonation is greater when large quantities are transported in a vessel.

[2] The risk from articles of Division 1.6 is limited to the explosion of a single article

§ 173.51 Authorization to offer and transport explosives.

(a) Unless otherwise provided, no person may offer or transport an explosive, unless it has been tested and classed as required by this subpart and approved by the Director, OHMT (See § 173.56 of this subchapter).

(b) Reports of explosive approved by the Department of Defense or the Department of Energy must be filed with, and receipt acknowledge in writing by, the Director, OHMT, prior to such explosives being offered for transportation.

§ 173.52 Classification codes and compatibility groups of explosives.

(a) The classification code for an explosive, which is assigned by the Director, OHMT in accordance with this subpart, consists of the division number followed by the compatibility group letter. Compatibility group letters are used to specify the controls for the storage and transportation of explosives and to prevent an increase in hazard that might result if certain types of explosives were stored or transported together. Transportation compatibility requirements for carriers are prescribed in §§ 174.81, 175.78, 176.83 and 177.848 of this subchapter for transportation by rail, air, vessel, and public highway, respectively, and storage directly related thereto.

(b) Compatibility groups and classification codes for the various types of explosives are set forth in the following tables. Table 1 sets forth compatibility groups and classification codes for substances and articles described in the first column of the table. Table 2 shows the number of classification codes that are possible within each explosive division. Altogether, there are 35 possible classification codes for explosives.

TABLE 1. CLASSIFICATION CODES

Description of substances or article to be classified	Compatibility Group	Classification code
Primary explosive substance	A	1.1A.
Article containing a primary explosive substance and not containing two or more effective protective features.	B	1.1B, 1.2B, 1.4B.
Propellant explosive substance or other deflagrating explosive substance or article containing such explosive substance.	C	1.1C, 1.2C, 1.3C, 1.4C.

TABLE 1. CLASSIFICATION CODES—Continued

Description of substances or article to be classified	Compatibility Group	Classification code
Secondary detonating explosive substance or black powder or article containing a secondary detonating explosive substance, in each case without means of initiation and without a propelling charge, or article containing a primary explosive substance and containing two or more effective features.	D	D1.1D, 1.2D, 1.4D, 1.5D.
Article containing a secondary detonating explosive substance, without means of initiation, with a propelling charge (other than one containing flammable liquid or hypergolic liquid).	E	1.1E, 1.2E, 1.4E.
Article containing a secondary detonating explosive substance with its means of initiation, with a propelling charge (other than one containing flammable liquid or hypergolic liquid) or without a propelling charge.	F	1.1F, 1.2F, 1.3F, 1.4F.
Pyrotechnic substance or article containing a pyrotechnic substance, or article containing both an explosive substance and an illuminating, incendiary, tear-producing or smoke-producing substance (other than a water-activated article or one containing white phosphorus, phosphide or flammable liquid or gel or hypergolic liquid).	G	1.1G, 1.2G, 1.3G, 1.4G.
Article containing both an explosive substance and white phosphorus	H	1.2H, 1.3H.
Article containing both an explosive substance and flammable liquid or gel	J	1.1J, 1.2J, 1.3J.
Article containing both an explosive substance and a toxic chemical agent	K	1.2K, 1.3K.
Explosive substance or article containing an explosive substance and presenting a special risk (e.g., due to water-activation or presence of hybergolic liquids, phosphides or pyrophoric substances) needing isolation of each type.	L	1.1L, 1.2L, 1.3L.
Articles containing only extremely insensitive detonating substances	N	1.6N.
Substance or article so packed or designed that any hazardous effects arising from accidental functioning are limited to the extent that they do not significantly hinder or prohibit fire fighting or other emergency response efforts in the immediate vicinity of the package.	S	1.4S.

TABLE 2.—SCHEME OF CLASSIFICATION OF EXPLOSIVES, COMBINATION OF HAZARD DIVISION WITH COMPATIBILITY GROUP

Hazard division	Compatibility group													
	A	B	C	D	E	F	G	H	J	K	L	N	S	A-S
1.1	1.1A	1.1B	1.1C	1.1D	1.1E	1.1F	1.1G		1.1J		1.1L			9
1.2		1.2B	1.2C	1.2D	1.2E	1.2F	1.2G	1.2H	1.2J	1.2K	1.2L			10
1.3			1.3C			1.3F	1.3G	1.3H	1.3J	1.3K	1.3L			7
1.4		1.4B	1.4C	1.4D	1.4E	1.4F	1.4G						1.4S	7
1.5				1.5D										1
1.6												1.6N		1
1.1–1.6	1	3	4	4	3	4	4	2	3	2	3	1	1	35

§ 173.53 Provisions for using old classifications of explosives.

Where the classification system in effect prior to January 1, 1991, is referenced in State or local laws, ordinances or regulations not pertaining to the transportation of hazardous materials, the following table may be used to compare old and new hazard class names:

Class name prior to January 1, 1991	Current classification
Class A explosives	Division 1.1.
Class A or Class B explosives	Division 1.2.
Class B explosives	Division 1.3.
Class C explosives	Division 1.4.
Blasting Agents	Division 1.5.
No applicable hazard class	Division 1.6.

§ 173.54 Forbidden explosives.

Unless otherwise provided in this subchapter, the following explosives shall not be offered for transportation or transported:

(a) An explosive that has not been approved in accordance with § 173.56 of this subchapter.

(b) An explosive mixture or device containing a chlorate and also containing:

(1) An ammonium salt, including a substituted ammonium of quaternary ammonium salt; or,

(2) An acidic substance, including a salt of a weak base and a strong acid.

(c) A leaking or damaged package of explosives.

(d) Propellants that are unstable, condemned or deteriorated.

(e) Nitroglycerin, ethylene glycol dinitrate, or other liquid explosives not specifically authorized by this subchapter.

(f) A loaded firearm (except as provided in 14 CFR 108.11).

(g) Fireworks that combine an explosive and a detonator.

(h) Fireworks containing yellow or white phosphorus.

(i) A toy torpedo, the maximum outside dimension of which exceeds 23mm (0.8 inch), or a toy torpedo containing a mixture of potassium chlorate, black antimony (antimony sulfide), and sulfur, if the weight of the explosive material in the device exceeds 0.26 gram (4 grains).

(j) Explosives specifically forbidden in the Hazardous Materials Table in § 172.101 of this subchapter.

(k) Explosives not meeting the acceptance criteria specified in § 173.57 of this subchapter.

§ 173.55 [Reserved]

§ 173.56 New explosives—definition and procedures for classification and approval.

(a) *Definition of new explosive.* For the purposes of this subchapter a "new explosive" means an explosive produced by a person who:

(1) Has not previously produced that explosive; or

(2) Has previously produced that explosive but has made a change in the formulation, design or process so as to alter the properties of the explosive. An explosive will not be considered a "new

explosive" if an agency listed in paragraph (b) of this section has determined, and confirmed in writing to the Director, OHMT, that there are no significant differences in hazard characteristics from the explosive previously approved.

(b) *Examination, classing and approval.* Except as provided in paragraph (j) of this section, no person may offer a new explosive for transportation unless that person has specified to the examining agency the ranges of composition of ingredients and components that will be allowed in that particular material or device, and unless it has been examined, classed, and approved as follows:

(1) A new explosive must be examined and assigned a recommended shipping description, class, and classification code by the Bureau of Explosives (BOE) or the Bureau of Mines, U.S. Department of Interior (BOM). The recommendation of class and classification code must be based on the tests and criteria prescribed in §§ 173.52, 173.57 and 173.58 of this subchapter. Each person who offers for transportation a new explosive must submit a copy of the report of examination and assignment of recommended shipping description, class and classification code to the Director, OHMT, for approval and must receive written approval and an EX- number from the Director, OHMT, before offering that explosive for transportation.

(2) A new explosive made by or under the direction or supervision of a component of the DOD may be examined, classed, and approved by—

(i) The U.S. Army Command Field Safety Activity, Naval Sea Systems Command (SEA-665), or Headquarters U.S. Air Force (HQUSAF; ISC/SEWV), in accordance with the Department of Defense Explosive Hazard Classification Procedures (TB 700-2; NAVSEAINST 8020.8; AFTO 11A-1-47; DLAR 8220.1), dated December 1989; or

(ii) The agencies and procedures specified in paragraph (b)(1) of this section.

(3) A new explosive made by or under the direction or supervision of the Department of Energy (DOE) may be—

(i) Examined by the DOE in accordance with the Explosive Hazard Classification Procedures (TB 700-2, dated December, 1989), and must be classed and approved by DOE; or

(ii) Examined, classed, and approved in accordance with paragraph (b)(1) of this section.

(4) For a material shipped under the description of "ammonium nitrate—fuel oil mixture (ANFO)", the only test required for classification purposes is the Cap Sensitivity Test (Test Method 5(a), prescribed in the Explosive Test Manual). The test must be performed by an agency listed in paragraph (b)(1), (b)(2), or (b)(3) of this section, the manufacturer, or the shipper. A copy of the test report must be submitted to the Director, OHMT, before the material is offered for transportation, and a copy of the test report must be retained by the shipper for as long as that material is shipped. At a minimum, the test report must contain the name and address of the person or organization conducting the test, date of the test, quantitative description of the mixture, including prill size and porosity, and a description of the test results.

(c) *Filing DOD or DOE approval report.* Each person who offers for transportation a new explosive approved by DOD or DOE must file with, and receipt acknowledged in writing by, the Director, OHMT, a copy of the approval accompanied by a supporting laboratory report or equivalent data, before offering the new explosive for transportation, unless the new explosive is:

(1) Being transported under paragraph (d) or (e) of this section; or

(2) Covered by a national security classification currently in effect.

(d) *Transportation of explosive samples for examination.* Notwithstanding the requirements of paragraph (b) of this section with regard to the transportation of a new explosive that has not been approved, a person may offer a sample of a new explosive for transportation, by railroad, highway, or vessel from the place where it was produced to an agency identified in paragraph (b) of this section, for examination if—

(1) The new explosive has been assigned a tentative shipping description and class in writing by the testing agency;

(2) The new explosive is packaged as required by this part according to the tentative description and class assigned, unless otherwise specified in writing by the testing agency; and,

(3) The package is labeled as required by this subchapter and the following is marked on the package:

(i) The words "SAMPLE FOR LABORATORY EXAMINATION";

(ii) The net weight of the new explosive; and

(iii) The tentative shipping name and identification number.

(e) Transportation of unapproved explosives for developmental testing. Notwithstanding paragraph (b) of this section, the owner of a new explosive that has not been examined or approved may transport that new explosive from the place where it was produced to an explosives testing range if—

(1) It is not a primary (initiating) explosive or a forbidden explosive according to this subchapter;

(2) It is described as a Division 1.1 explosive (substance or article) and is packed, marked, labeled, described on shipping papers and is otherwise offered for transportation in conformance with the requirements of this subchapter applicable to Division 1.1;

(3) It is transported in a motor vehicle operated by the owner of the explosive; and

(4) It is accompanied by a person, in addition to the operator of the motor vehicle, who is qualified by training and experience to handle the explosive.

(f) Notwithstanding paragraph (b) or (d) of this section, the Director, OHMT, may approve a new explosive on the basis of an approval issued for the explosive by the competent authority of a foreign government, or when examination of the explosive by the Bureau of Explosives or the Bureau of Mines is impracticable, on the basis of reports of tests conducted by disinterested third parties, or may approve the transportation of an explosives sample for the purpose of examination by the BOE, the BOM, or other government agency.

(g) Not withstanding paragraph (b) of this section, an explosive may be transported under §§ 171.11, 171.12, or 176.11 of this subchapter without the approval of the Director, OHMT, if the Director, OHMT, has acknowledged, in writing, the acceptability of an approval issued by the competent authority of a foreign government pursuant to the provisions of the UN Recommendations, the ICAO Technical Instructions, the IMDG Code, or other national or international regulations based on the UN Recommendations. In such a case, a copy of the foreign competent authority approval, and a copy of the written acknowledgement of its acceptance must accompany each shipment of that explosive.

(h) The requirements of this section do not apply to small arms ammunition which is:

(1) Not a forbidden explosive under § 173.54 of this subchapter;

(2) Ammunition for rifle, pistol, or shotgun;

(3) Ammunition with inert projectile or blank ammunition; and

(4) Ammunition not exceeding 50 caliber for rifle or pistol cartridges or 8 gauge for shotgun shells.

(i) If experience or other data indicate that the hazard of a material or a device

containing an explosive composition is greater or less than indicated according to the definition and criteria specified in §§ 173.50, 173.56, and 173.58 of this subchapter, the Director, OHMT, may, following examination in accordance with paragraph (b) of this section, revise its classification or except the material or device from the requirements of this subchapter.

(j) *Fireworks.* Notwithstanding the provisions of paragraph (b) of this section, Division 1.3 and 1.4 fireworks may be classed and approved by the Director, OHMT, without prior examination and offered for transportation, if:

(1) The fireworks are manufactured in accordance with the applicable requirements in APA Standard 87–1;

(2) A thermal stability test is conducted on the device by the BOE, the BOM, or the manufacturer. The test must be performed by maintaining the device, or a representative prototype of a large device such as a display shell, at a temperature of 75 °C. (167 °F.) for 48 consecutive hours. When a device contains more than one component, those components which could be in physical contact with each other in the finished device must be placed in contact with each other during the thermal stability test; and

(3) The manufacturer applies in writing to the Director, OHMT, following the applicable requirements in APA Standard 87–1, and is notified in writing by the Director, OHMT, that the fireworks has been classed, approved, and assigned an EX-number. Each application must be complete, including all relevant background data and copies of all applicable drawings, test results, and any other pertinent information on each device for which approval is being requested. The manufacturer must sign the application and certify that the device for which approval is requested conforms to APA Standard 87–1 and that the descriptions and technical information contained in the application are complete and accurate. If the application is denied, the manufacturer will be notified in writing of the reasons for the denial. The Director, OHMT, may require that the fireworks be examined by an agency listed in paragraph (b)(1) of this section.

(Approved by the Office of Management and Budget under Control Number 2137–0557).

§ 173.57 Acceptance criteria for new explosives.

(a) Unless otherwise excepted, an explosive substance must be subjected to the Drop Weight Impact Sensitivity Test (Test Method 3(a)(i)), the Friction Sensitivity Test (Test Method 3(b)(iii)), the Thermal Stability Test (Test Method 3(c)) at 75 °C. (167 °F.) and the Small-Scale Burning Test (Test Method 3(d)(i)), each as described in the Explosive Test Manual (UN Recommendations on the Transport of Dangerous Goods, Tests and Criteria, First Edition (see § 171.8 of this subchapter). A substance is forbidden for transportation if any one of the following occurs:

(1) For a liquid, failure to pass the test criteria when tested in the Drop Weight Impact Sensitivity Test apparatus for liquids;

(2) For a solid, failure to pass the test criteria when tested in the Drop Weight Impact Sensitivity Test apparatus for solids;

(3) The substance has a friction sensitiveness equal to or greater than that of dry pentaerythrite tetranitrate (PETN) when tested in the Friction Sensitivity Test;

(4) The substance fails to pass the test criteria specified in the Thermal Stability Test at 75 °C. (167 °F.); or

(5) Explosion occurs when tested in the Small-Scale Burning Test.

(b) An explosive article, packaged or unpackaged, or a packaged explosive substance must be subjected to the Thermal Stability Test for Articles and Packaged Articles (Test method 4(a)(i)) and the Twelve Meter Drop Test (Test Method 4(b)(ii)), when appropriate, in the Explosive Test Manual. An article or packaged substance is forbidden for transportation if evidence of thermal instability or excessive impact sensitivity is found in those tests according to the criteria and methods of assessing results prescribed therein.

(c) Dynamite (explosive, blasting, type A) is forbidden for transportation if any one of the following occurs:

(1) It does not have uniformly mixed with the absorbent material a satisfactory antacid in a quantity sufficient to have the acid neutralizing power of an amount of magnesium carbonate equal to one percent of the nitroglycerin or other liquid explosive ingredient;

(2) During the centrifuge test (Test Method D–2, in Appendix D to this part), or in the compression test (Test Method D–3 in Appendix D to this part), a non-gelatin dynamite loses more than 3 percent by weight of the liquid explosive or a gelatin dynamite loses more than 10 percent by weight of the liquid explosive; or

(3) During the leakage test (Test Method D–1 in Appendix D to this part), there is any loss of liquid.

§ 173.58 Assignment of class and division for new explosives.

(a) *Division 1.1, 1.2, 1.3, and 1.4 explosives.* In addition to the test prescribed in § 173.57 of this subchapter, a substance or article in these divisions must be subjected to Test Methods 6(a), 6(b), and 6(c), as described in the Explosive Test Manual, for assignment to an appropriate division. The criteria for assignment of class and division are as follows:

(1) Division 1.1 if the major hazard is mass explosion;

(2) Division 1.2 if the major hazard is dangerous projections;

(3) Division 1.3 if the major hazard is radiant heat or violent burning, or both, but there is no blast or projection hazard;

(4) Division 1.4 if there is a small hazard with no mass explosion and no projection of fragments of appreciable size or range;

(5) Division 1.4 Compatibility Group S (1.4S) if the hazardous effects are confined within the package or the blast and projection effects do not significantly hinder emergency response efforts; or

(6) Not in the explosive class if the substance or article does not have significant explosive hazard or if the effects of explosion are completely confined within the article.

(b) *Division 1.5 explosive.* Except for ANFO, a substance that has been previously examined in accordance with the provisions § 173.57(a) of this subchapter, must be subjected to the following additional tests: Cap Sensitivity Test, Princess Incendiary Spark Test, DDT Test, and External Fire Test, each as described in the Explosive Test Manual. A material may not be classed as a Division 1.5 explosive if any of the following occurs:

(1) Detonation occurs in the Cap Sensitivity Test (Test Method 5(a));

(2) Detonation occurs in the DDT Test (Test Method 5(b)(ii));

(3) An explosion, evidenced by a loud noise and projection of fragments, occurs in the External Fire Test (Test Method 5(c); or

(4) Ignition or explosion occurs in the Princess Incendiary Spark Test (Test Method 5(d)).

(c) *Division 1.6 explosive.* (1) In order to be classed as a 1.6 explosive, an article must pass all of the following tests, as prescribed in the Explosive Test Manual:

(i) The 1.6 Article External Fire Test;

(ii) The 1.6 Article Slow Cook-off Test; and

(iii) The 1.6 Article Propagation Test.

(2) A substance intended for use as the explosive load in an article of Division 1.6 must be an extremely insensitive detonating substance (EIDS). In order to determine if a substance is an EIDS, it must be subjected to the tests in paragraphs (c)(2)(i) through (c)(2)(x) of this section, which are described in the Explosive Test Manual. The substance must be tested in the form (i.e., composition, granulation, density, etc.) in which it is to be used in the article. A substance is not an EIDS (extremely insensitive detonating substance) if it fails any one of the tests described in paragraphs (c)(2)(i) through (c)(2)(x) of this section.

(i) The Drop Weight Impact Sensitivity Test;

(ii) The Friction Sensitivity Test;

(iii) The Thermal Sensitivity Test at 75 °C. (167 °F.);

(iv) The Small Scale Burning Test;

(v) The EIDS Cap Test;

(vi) The EIDS Gap Test;

(vii) The Susan Test;

(viii) The EIDS Bullet Impact Test;

(ix) The EIDS External Fire Test; and

(x) The EIDS Slow Cook-off Test.

(d) The Director, OHMT, may waive or modify certain test(s) identified in §§ 173.57 and 173.58 of this subchapter, or require additional testing, if appropriate. In addition, the Director, OHMT, may limit the quantity of explosive in a device.

(e) Each explosive is assigned a compatibility group letter, by the Director, OHMT, based on the criteria prescribed in § 173.52(b) of this subchapter.

§ 173.59 Description of terms for explosives.

For the purpose of this subchapter, a description of the following terms is provided for information only. They must not be used for purposes of classification or to replace proper shipping names prescribed in § 172.101 of this subchapter.

Ammonium-nitrate—fuel oil mixture (ANFO). A blasting explosive containing no ingredients other than prilled ammonium nitrate and fuel oil.

Ammunition. Generic term related mainly to articles of military application consisting of all types of bombs, grenades, rockets, mines, projectiles and other similar devices or contrivances.

Ammunition, illuminating, with or without burster, expelling charge or propelling charge. Ammunition designed to produce a single source of intense light for lighting up an area. The term includes illuminating cartridges, grenades and projectiles, and illuminating and target identification bombs. The term excludes the following articles which are listed separately: *cartridges, signal; signal devices; hand signals; distress flares, aerial* and *flares, surface.*

Ammunition, incendiary. Ammunition containing an incendiary substance which may be a solid, liquid or gel including white phosphorus. Except when the composition is an explosive *per se.* it also contains one or more of the following: a propelling charge with primer and igniter charge, a fuze with burster or expelling charge. The term includes: "*Ammunition, incendiary,* liquid or gel, with burster, expelling charge or propelling charge"; "*Ammunition, incendiary* with or without burster, expelling charge or propelling charge"; and "*Ammunition, incendiary white phosphorus,* with burster, expelling charge or propelling charge".

Ammunition, practice. Ammunition without a main bursting charge, containing a burster or expelling charge. Normally it also contains a fuze and propelling charge. The term excludes the following article which is listed separately: "*Grenades, practice*".

Ammunition, proof. Ammunition containing pyrotechnic substance, used to test the performance or strength of new ammunition, weapon component or assemblies.

Ammunition, smoke. Ammunition containing a smoke-producing substance such as chlorosulphonic acid mixture (CSAM), titanium tetrachloride (FM), white phosphorus, or smoke producing substance whose composition is based on hexachlorothannol (HC) or red phosphorus. Except when the substance is an explosive *per se,* the ammunition also contains one or more of the following: a propelling charge with primer and igniter charge; a fuze with burster or expelling charge. The term includes: "*Ammunition, smoke,* with or without burster, expelling charge or propelling charge"; "*Ammunition, smoke, white phosphorus* with burster, expelling charge or propelling charge".

Ammunition, tear-producing with burster, expelling charge or propelling charge. Ammunition containing tear-producing substance. It may also contain one or more of the following: a pyrotechnic substance, a propelling charge with primer and igniter charge, a fuze with burster or expelling charge.

Ammunition, toxic. Ammunition containing toxic agent. It may also contain one or more of the following: a pyrotechnic substance, a propelling charge with primer and igniter charge, a fuze with burster or expelling charge.

Articles, explosive, extremely insensitive (Articles, EEI). Articles that contain only extremely insensitive detonating substances and which demonstrate a negligible probability of accidental initiation or propagation under normal conditions of transport and which have passed Test Series 7.

Articles, pyrophoric. Articles which contain a pyrophoric substance (capable of spontaneous ignition when exposed to air) and an explosive substance or component. The term excludes articles containing white phosphorus.

Articles, pyrotechnic for technical purposes. Articles which contain pyrotechnic substances and are used for technical purposes such as heat generation, gas generation, theatrical effects, etc. The term excludes the following articles which are listed separately: all ammunition; *cartridges, signal; cutters, cable, explosive; fireworks; flares, aerial; flares, surface; release devices, explosives; rivets, explosive; signal devices, hand; signals, distress; signals, railway track, explosive;* and *signals, smoke.*

Black powder (gunpowder). Substance consisting of an intimate mixture of charcoal or other carbon and either potassium or sodium nitrate, and sulphur. It may be meal, granular, compressed, or pelletized.

Bombs. Explosive articles which are dropped from aircraft. They may contain a flammable liquid with bursting charge, a photo-flash composition or bursting charge. The term excludes *torpedoes* (aerial) and includes *bombs, photo-flash; bombs* with bursting charge; *bombs with flammable liquids,* with bursting charge.

Boosters. Articles consisting of a charge of detonating explosive without means of initiation. They are used to increase the initiating power of detonators or detonating cord.

Bursters, explosive. Articles consisting of a small charge of explosive to open projectiles or other ammunition in order to disperse their contents.

Cartridges, blank. Articles which consist of a cartridge case with a center or rim fire primer and a confined charge of smokeless or black powder, but no projectile. Used in training, saluting, or in starter pistols, etc.

Cartridges, flash. Articles consisting of a casing, a primer and flash powder, all assembled in one piece for firing.

Cartridges for weapons. (1) Fixed (assembled) or semi-fixed (partially assembled) ammunition designed to be fired from weapons. Each cartridge includes all the components necessary to function the weapon once. The name and description should be used for military small arms cartridges that cannot be described as "cartridges, small arms". Separate loading

ammunition is included under this name and description when the propelling charge and projectile are packed together (see also "Cartridges, blank").

(2) Incendiary, smoke, toxic, and tear-producing cartridges are described under "ammunition, incendiary", etc.

Cartridges for weapons, inert projectile. Ammunition consisting of a casing with propelling charge and a solid or empty projectile.

Cartridges, oil well. Articles consisting of a casing of thin fiber, metal or other material containing only propellant explosive. The term excludes "charges, shaped, commercial".

Cartridges, power device. Articles designed to accomplish mechanical actions. They consist of a casing with a charge of deflagrating explosive and a means of ignition. The gaseous products of the deflagration produce inflation, linear or rotary motion or activate diaphragms, valves or switches or project fastening devices or extinguishing agents.

Cartridges, signal. Articles designed to fire colored flares or other signals from signal pistols or devices.

Cartridges, small arms. Ammunition consisting of a cartridge case fitted with a center or rim fire primer and containing both a propelling charge and solid projectile(s). They are designed to be fired in weapons of caliber not larger than 19.1 mm. Shotgun cartridges of any caliber are included in this description. The term excludes: "Cartridges, small arms, blank", and some military small arms cartridges listed under "Cartridges for weapons, inert projectile".

Cases, cartridge, empty with primer. Articles consisting of a cartridge case made from metal, plastics or other non-flammable materials, in which only the explosive component is the primer.

Cases, combustible, empty, without primer. Articles consisting of cartridge cases made partly or entirely from nitrocellulose.

Charges, bursting. Articles consisting of a charge of detonating explosive such as hexolite, octolite, or plastics bonded explosive designed to produce effect by blast or fragmentation.

Charges, demolition. Articles consisting of a charge of detonating explosive in a casing of fiberboard, plastics, metal or other material. The term excludes articles identified as "bombs, mines, etc.".

Charges, depth. Articles consisting of a charge of detonating explosive contained in a drum or projectile. They are designed to detonate under water.

Charges, expelling. A charge of deflagrating explosive designed to eject the payload from the parent article without damage.

Charges, explosive, commercial without detonator. Articles consisting of a charge of detonating explosive without means of initiation, used for explosive welding, joining, forming, and other metallurgical processes.

Charges, propelling. Articles consisting of propellant charge in any physical form, with or without a casing, for use in cannon or as a component of rocket motors.

Charges, shaped commercial, without detonator. Articles consisting of a casing containing a charge of detonating explosive with a cavity lined with rigid material, without means of initiation. They are designed to produce a powerful, penetrating jet effect.

Charges, shaped, flexible, linear. Articles consisting of a V-shaped core of a detonating explosive clad by a flexible metal sheath.

Charges, supplementary, explosive. Articles consisting of a small removable booster used in the cavity of a projectile between the fuze and the bursting charge.

Components, explosive train, n.o.s. Articles containing an explosive designed to transmit a detonation or deflagration within an explosive train.

Contrivance, water-activated with burster, expelling charge or propelling charge. Articles whose functioning depends on physico-chemical reaction of their contents with water.

Cord, detonating, flexible. Articles consisting of a core of detonating explosive enclosed in spun fabric with plastics or other covering.

Cord (fuse) detonating, metal clad. Articles consisting of a core of detonating explosive clad by a soft metal tube with or without protective covering. When the core contains a sufficiently small quantity of explosive, the words "mild effect" are added.

Cord igniter. Articles consisting of textile yarns covered with black powder or another fast burning pyrotechnic composition and a flexible protective covering or it consists of a core of black powder surrounded by a flexible woven fabric. It burns progressively along its length with an external flame and is used to transmit ignition from a device to a charge or primer.

Cutters, cable, explosive. Articles consisting of a knife-edged device which is driven by a small charge of deflagrating explosive into an anvil.

Detonator assemblies, non-electric, for blasting. Non-electric detonators assembled with and activated by such means as safety fuse, shock tube, flash tube, or detonating cord. They may be of instantaneous design or incorporate delay elements. Detonating relays incorporating detonating cord are included. Other detonating relays are included in "Detonators, non-electric".

Detonators. Articles consisting of a small metal or plastic tube containing explosives such as lead azide, PETN, or combinations of explosives. They are designed to start a detonation train. They may be constructed to detonate instantaneously, or may contain a delay element. They may contain no more than 10 grams of total explosives weight, excluding ignition and delay charges, per unit. The term includes: "detonators for ammunition"; "detonators for blasting, both electric and non-electric"; and "detonating relays without flexible detonating cord".

Dynamite. A detonating explosive containing a liquid explosive ingredient (generally nitroglycerin or similar organic nitrate esters or both) that is uniformly mixed with an absorbent material, such as wood pulp, and usually contains materials such as nitrocellulose, sodium and ammonium nitrate.

Entire load and total contents. The phrase means such a substantial portion of the material explodes that the practical hazard should be assessed by assuming simultaneous explosion of the whole of the explosive content of the load or package.

Explode. The term indicates those explosive effects capable of endangering life and property through blast, heat, and projection of missiles. It encompasses both deflagration and detonation.

Explosion of the total contents. The phrase is used in testing a single article or package or a small stack of articles or packages.

Explosive, blasting. Detonating explosive substances used in mining, construction, and similar tasks. Blasting explosives are assigned to one of five types. In addition to the ingredients listed, blasting explosives may also contain inert components such as kieselguhr and other minor ingredients such as coloring agents and stabilizers.

Explosive, blasting, type A. Substances consisting of liquid organic nitrates such as nitroglycerin or a mixture of such ingredients with one or more of the following: Nitrocellulose, ammonium nitrate or other inorganic nitrates, aromatic nitro-derivatives, or combustible materials, such as wood-meal and aluminum powder. Such explosives must be in powdery, gelatinous, plastic or elastic form. The term includes dynamite, blasting gelatine and gelatine dynamites.

Explosive, blasting, type B. Substances consisting of a mixture of ammonium nitrate or other inorganic

nitrates with an explosive such as trinitrotoluene, with or without other substances, such as wood-meal and aluminum powder, or a mixture of ammonium nitrate or other inorganic nitrates with other combustible substances which are not explosive ingredients. Such explosives must not contain nitroglycerin, similar liquid organic nitrates, or chlorates.

Explosive, blasting, type C. Substances consisting of a mixture of either potassium or sodium chlorate or potassium, sodium or ammonium perchlorate with organic nitro-derivatives or combustible materials such as wood-meal or aluminum powder or a hydrocarbon. Such explosives must not contain nitroglycerin or similar liquid organic nitrates.

Explosive, blasting, type D. Substances consisting of a mixture of organic nitrate compounds and combustible materials such as hydrocarbons and aluminum powder. Such explosives must not contain nitroglycerin, similar liquid organic nitrates, chlorates or ammonium-nitrate. The term generally includes plastic explosives.

Explosive, blasting, type E. Substances consisting of water as an essential ingredient and high proportions of ammonium nitrate or other oxidizers, some or all of which are in solution. The other constituents may include nitro-derivatives such as trinitrotoluene, hydrocarbons or aluminum powder. The term includes; explosives, emulsion; explosives, slurry; and explosives, watergel.

Explosive, deflagrating. A substance, e.g., propellant, which reacts by deflagration rather than detonation when ignited and used in its normal manner.

Explosive, detonating. A substance which reacts by detonation rather than deflagration when initiated and used in its normal manner.

Explosive, extremely insensitive detonating substance (EIDS). A substance which, although capable of sustaining a detonation, has demonstrated through tests that it is so insensitive that there is very little probability of accidental initiation.

Explosive, primary. Explosive substance manufactured with a view to producing a practical effect by explosion which is very sensitive to heat, impact, or friction and which, even in very small quantities, detonates. The main primary explosives are mercury fulminate, lead azide, and lead styphnate.

Explosive, secondary. An explosive substance which is relatively insensitive (when compared to primary explosives) which is usually initiated by primary explosives with or without the aid of boosters or supplementary charges. Such an explosive may react as a deflagrating or as a detonating explosive.

Fireworks. Pyrotechnic articles designed for entertainment.

Flares. Articles containing pyrotechnic substances which are designed to illuminate, identify, signal, or warn. The term includes: flares, aerial and flares, surface.

Flash powder. Pyrotechnic substance which, when ignited, produces an intense light.

Fracturing devices, explosive, for oil wells, without detonators. Articles consisting of a charge of detonating explosive contained in a casing without the means of initiation. They are used to fracture the rock around a drill shaft to assist the flow of crude oil from the rock.

Fuse/Fuze. Although these two words have a common origin (French fusee, fusil) and are sometimes considered to be different spellings, it is useful to maintain the convention that fuse refers to a cord-like igniting device, whereas fuze refers to a device used in ammunition which incorporates mechanical, electrical, chemical, or hydrostatic components to initiate a train by deflagration or detonation.

Fuse, igniter. Articles consisting of a metal tube with a core of deflagrating explosives.

Fuse, instantaneous, non detonating (Quickmatch). Article consisting of cotton yarns impregnated with fine black powder. It burns with an external flame and is used in ignition trains for fireworks, etc.

Fuse, safety. Article consisting of a core of fine-grained black powder surrounded by a flexible woven fabric with one or more protective outer coverings. When ignited, it burns at a predetermined rate without any explosive effect.

Fuzes. Articles designed to start a detonation or deflagration in ammunition. They incorporate mechanical, electrical, chemical, or hydrostatic components and generally protective features. The term includes: Fuzes, detonating; fuzes detonating with protective features; and fuzes igniting.

Grenades, hand or rifle. Articles which are designed to be thrown by hand or to be projected by rifle. The term includes: Grenades, hand or rifle, with bursting charge; and grenades, practice, hand or rifle. The term excludes: Grenades, smoke.

Igniters. Articles containing one or more explosive substance used to start deflagration of an explosive train. They may be actuated chemically, electrically, or mechanically. The term excludes: Cord, igniter; fuse, igniter; fuse, instantaneous, non-detonating; fuze, igniting; lighters, fuse, instantaneous, non-detonating; fuzes, igniting; lighters, fuse; primers, cap type; and primers, tubular.

Ignition, means of. A general term used in connection with the method employed to ignite a deflagrating train of explosive or pyrotechnic substances (for example: a primer for propelling charge, an igniter for a rocket motor or an igniting fuze).

Initiation, means of. (1) A device intended to cause the detonation of an explosive (for example: detonator, detonator for ammunition, or detonating fuze).

(2) The term "with its own means of initiation" means that the contrivance has its normal initiating device assembled to it and this device is considered to present a significant risk during transport but not one great enough to be unacceptable. The term does not apply, however, to a contrivance packed together with its means of initiation, provided the device is packaged so as to eliminate the risk of causing detonation of the contrivance in the event of functioning of the initiating device. The initiating device can even be assembled in the contrivance provided there are protective features such that the device is very unlikely to cause detonation of the contrivance under conditions which are associated with transport.

(3) For the purposes of classification, any means of initiation without two effective protective features should be regarded as Compatibility Group B; an article with its own means of initiation, without two effective protective features, would be Compatibility Group F. On the other hand, a means of initiation which itself possesses two effective protective features would be Compatibility Group D, and an article with a means of initiation which possesses two effective features would be Compatibility Group D or E. A means of initiation, adjudged as having two effective protective features, must be approved by the Director, OHMT. A common and effective way of achieving the necessary degree of protection is to use a means of initiation which incorporates two or more independent safety features.

Jet perforating guns, charged, oil well, without detonator. Articles consisting of a steel tube or metallic strip, into which are inserted shaped charges connected by detonating cord, without means of initiation.

Lighters, fuse. Articles of various design actuated by friction, percussion, or electricity and used to ignite safety fuse.

Mass explosion. Explosion which affects almost the entire load virtually instantaneously.

Mines. Articles consisting normally of metal or composition receptacles and bursting charge. They are designed to be operated by the passage of ships, vehicles, or personnel. The term include "Bangalore torpedoes".

Powder cake (powder paste). Substance consisting of nitrocellulose impregnated with not more than 60 percent of nitroglycerin or other liquid organic nitrates or a mixture of these.

Powder, smokeless. Substance generally based on nitrocellulose used as propellant. The term includes propellants with a single base (nitrocellulose (NC) alone), those with a double base (such as NC and nitroglycerin (NG)) and those with a triple base (such as NC/NG/nitroguanidine). Cast pressed or bag-charges of smokeless powder are listed under "charges, propelling".

Primers, cap type. Articles consisting of a metal or plastic cap containing a small amount of primary explosive mixture that is readily ignited by impact. They serve as igniting elements in small arms cartridges and in percussion primers for propelling charges.

Primers, tubular. Articles consisting of a primer for ignition and an auxiliary charge of deflagrating explosive, such as black powder, used to ignite the propelling charge in a cartridge case for cannon, etc.

Projectiles. Articles, such as a shell or bullet, which are projected from a cannon or other artillery gun, rifle, or other small arm. They may be inert, with or without tracer, or may contain a burster or expelling charge or bursting charge. The term includes: Projectiles, inert, with tracer; projectiles, with burster or expelling charge; and projectiles, with bursting charge.

Propellants. Deflagrating explosive used for propulsion.

Release devices, explosive. Articles consisting of a small charge of explosive with means of initiation. They sever rods or links to release equipment quickly.

Rocket motors. Articles consisting of a solid, liquid, or hypergolic propellant contained in a cylinder fitted with one or more nozzles. They are designed to propel a rocket or guided missile. The term includes: Rocket motors; rocket motors with hypergolic liquids with or without an expelling charge; and rocket motors, liquid fueled.

Rockets. Articles containing a rocket motor and a payload which may be an explosive warhead or other device. The term includes: Guided missiles; rockets, line-throwing; rockets, liquid fueled, with bursting charge; rockets, with bursting charge; rockets, with expelling charge; and rockets, with inert head.

Signals. Articles consisting of pyrotechnic substances designed to produce signals by means of sound, flame, or smoke or any combination thereof. The term includes: Signal devices, hand; signals, distress ship; signals, railway track, explosive; signals smoke.

Sounding devices, explosive. Articles consisting of a charge of detonating explosive. They are dropped from ships and function when they reach a predetermined depth or the sea bed.

Substance, explosive, very insensitive (Substance, EVI) N.V.S. Substances which present a mass explosive hazard but which are so insensitive that there is very little probability of initiation, or of transition from burning to detonation under normal conditions of transport and which have passed test series 5.

Torpedoes. Articles containing an explosive or non-explosive propulsion system and designed to be propelled through water. They may contain an inert head or warhead. The term includes: Torpedoes, liquid fueled, with inert head; torpedoes, liquid fueled, with or without bursting charge; and torpedoes, with bursting charge.

Tracers for ammunition. Sealed articles containing pyrotechnic substances, designed to reveal the trajectory of a projectile.

Warheads. Articles containing detonating explosives, designed to be fitted to a rocket, guided missile, or torpedo. They may contain a burster or expelling charge or bursting charge. The term includes: Warhead rocket with bursting charge; and warheads, torpedo, with bursting charge.

§ 173.60 General packaging requirements for explosives.

(a) Unless otherwise provided in this subpart, the packaging used for explosives (Class 1) must meet Packing Group II requirements. Each packaging used for an explosive must be capable of meeting the test requirements of subpart M of part 178 of this subchapter, at the specified level of performance, and the applicable general packaging requirements of paragraph (b) of this section.

(b) The general requirements for packaging of explosives are as follows:

(1) Nails, staples, and other closure devices, made of metal, having no protective covering may not penetrate to the inside of the outer packaging unless the inner packaging adequately protects the explosive against contact with the metal.

(2) The closure device of containers for liquid explosives must provide double protection against leakage, such as a screw cap secured in place with tape.

(3) Inner packagings, fitting, and cushioning materials, and the placing of explosive substances or articles in packages, must be such that no dangerous movement may occur within the packages during transportation.

(4) When the packaging includes water that could freeze during transportation, a sufficient amount of anti-freeze, such as denatured ethyl alcohol, must be added to the water to prevent freezing. Anti-freeze that could create a fire hazard because of excessive volatility or excessive concentration may not be used.

(5) Each article fitted with a means of ignition or initiation must be effectively protected from accidental operation during normal conditions of transportation.

(6) For a metal packaging that is double seamed, entry of an explosive substances into the recesses of the seams must be prevented.

(7) The closure device of each metal packaging must include a suitable gasket. The closure device may not include a screw thread.

(8) If a metal-lined box is used for packaging an explosive substance, the box must be constructed in such a way that the explosive substance carried cannot get between the liner and the sides or bottom of the box.

(9) Whenever a box of ordinary natural wood is specified, plywood or reconstituted wood may be substituted for that material, if it is compatible with the explosive carried and is in compliance with the appropriate specification, if any.

(10) An explosive article containing an electrical means of initiation that is sensitive to external electromagnetic radiation, must have its means of initiation effectively protected from electromagnetic radiation sources (for example, radar or radio transmitters) through either design of packaging or the article, or both.

(11) If a plastic bag or plastic container is used in direct contact with the explosive, only those types of plastic may be used that:

(i) Will not build up an electrostatic charge which would lead to ignition of the explosive; and

(ii) Will not be deteriorated by or react dangerously with the explosive.

(12) A metal surface that could increase the sensitivity or decrease the thermal stability of an explosive may not be in contact with that explosive.

(13) An explosive must be in a waterproof receptacle if:

(i) It is water soluble;

(ii) It has water or a water solution as part of its composition; or

(iii) It has water or a water solution added to it when offered for transportation.

(14) When this subpart requires a specified percentage of desensitizer or phlegmatizer to be mixed with an explosive, the percentage is based on the total weight of the mixture, not the weight of the explosive alone. When a percentage of water is specified and anti-freeze must be added in accordance with paragraph (a)(4) of this section, the combined weight of the water and the anti-freeze may be substituted for the weight of water required.

§ 173.61 Mixed packaging requirements.

(a) Unless specifically authorized in this subchapter, explosives may not be packed in the same outside packaging with any other material, unless packaged by the DOD in accordance with § 173.7(a) of this subchapter.

(b) Hardware necessary for assembly of explosive articles at the point- of-use may be packed in the same outside packaging with the explosive articles. The hardware must be securely packed in a separate inside packaging. Sufficient cushioning materials shall be used to ensure that all inside packagings are securely packed in the outside packaging.

§ 173.62 Specific packaging requirements.

(a) When the Hazardous Materials Table in § 172.101 of this subchapter, specifies that an explosive must be packaged in accordance with this section, only non-bulk packagings which conform to the provisions of this section, and the applicable requirements in §§ 173.60 and 173.61 of this subchapter, may be used.

(b) *Explosives Table:* The Explosives Table specifies, by a two step process, which packaging methods shall be utilized for a particular proper shipping names. Proper shipping names are identified by their identification number, obtained from column 4 of the Hazardous Materials, § 172.101 of this subchapter, in the first column of the Explosives Table. The second column of which must be used to pack a particular explosive. The table of packaging methods in paragraph (c) of this section defines the packaging method or methods (e.g., US032) which must be used to pack a particular methods in paragraph (c) of this section defines the packaging methods.

EXPLOSIVES TABLE

Identification No. (1)	Packaging methods (2)
UN0004	US002
UN0005	US032
UN0006	US032
UN0007	US032
UN0009	US023
UN0010	US023
UN0012	US032
UN0014	US032
UN0015	US023
UN0016	US023
UN0018	US023
UN0019	US023
UN0020	US023
UN0021	US023
UN0027	US004
UN0028	US005
UN0029	US027
UN0030	US026
UN0033	US029
UN0034	US029
UN0035	US029
UN0037	US029
UN0038	US029
UN0039	US029
UN0042	US030
UN0043	US031
UN0044	US059
UN0048	US037
UN0049	US035
UN0050	US035
UN0054	US035
UN0055	US036
UN0056	US029
UN0059	US040
UN0060	US042
UN0065	US044
UN0066	US046
UN0070	US047
UN0072	US006
UN0073	US048
UN0074	US003
UN0075	US024
UN0076	US002
UN0077	US002
UN0078	US002
UN0079	US010
UN0081	US007
UN0082	US007
UN0083	US009
UN0084	US010
UN0092	US051
UN0093	US051
UN0094	US017
UN0099	US052
UN0101	US053
UN0102	US045
UN0103	US053
UN0104	US045
UN0105	US054
UN0106	US055
UN0107	US055
UN0110	US056
UN0113	US003
UN0114	US003
UN0118	US012
UN0121	US057
UN0124	US073
UN0129	US003
UN0130	US003
UN0131	US058
UN0132	US002

EXPLOSIVES TABLE—Continued

Identification No. (1)	Packaging methods (2)
UN0133	US003
UN0135	US003
UN0136	US029
UN0137	US029
UN0138	US029
UN0143	US024
UN0144	US014
UN0146	US016
UN0147	US002
UN0150	US003
UN0151	US012
UN0153	US002
UN0154	US002
UN0155	US002
UN0158	US018
UN0159	US016
UN0160	US019
UN0161	US019
UN0167	US029
UN0168	US029
UN0169	US029
UN0171	US023
UN0173	US061
UN0174	US061
UN0180	US062
UN0181	US062
UN0182	US062
UN0183	US062
UN0186	US063
UN0190	US072
UN0191	US067
UN0192	US068
UN0193	US068
UN0194	US067
UN0195	US067
UN0196	US067
UN0197	US067
UN0203	US018
UN0204	US069
UN0207	US002
UN0208	US010
UN0209	US022
UN0212	US070
UN0213	US070
UN0214	US002
UN0215	US010
UN0216	US002
UN0217	US002
UN0218	US002
UN0219	US002
UN0220	US002
UN0221	US029
UN0222	US001
UN0223	US001
UN0224	US003
UN0226	US006
UN0234	US002
UN0235	US002
UN0236	US002
UN0237	US041
UN0238	US065
UN0240	US065
UN0241	US007
UN0242	US039
UN0243	US023
UN0244	US023
UN0245	US023
UN0246	US023
UN0247	US023
UN0248	US043
UN0249	US043
UN0250	US066
UN0254	US023
UN0255	US026
UN0257	US055
UN0266	US012
UN0267	US027

EXPLOSIVES TABLE—Continued

Identification No. (1)	Packaging methods (2)
UN0271	US019
UN0272	US019
UN0273	US019
UN0274	US019
UN0275	US034
UN0276	US034
UN0277	US033
UN0278	US033
UN0279	US039
UN0280	US063
UN0281	US063
UN0282	US015
UN0283	US030
UN0284	US056
UN0285	US056
UN0286	US029
UN0287	US029
UN0288	US041
UN0289	US044
UN0290	US045
UN0291	US029
UN0292	US056
UN0293	US056
UN0294	US029
UN0295	US062
UN0296	US069
UN0297	US023
UN0299	US029
UN0300	US023
UN0301	US023
UN0303	US023
UN0305	US017
UN0306	US071
UN0312	US035
UN0313	US067
UN0314	US057
UN0315	US057
UN0315	US057
UN0316	US055
UN0318	US056
UN0319	US060
UN0320	US060
UN0321	US032
UN0322	US066
UN0323	US034
UN0324	US029
UN0325	US057
UN0326	US032
UN0327	US032
UN0328	US032
UN0329	US064
UN0330	US064
UN0331	US007, US008
UN0332	US011
UN0333	US049
UN0334	US050
UN0335	US025
UN0336	US025
UN0337	US002
UN0338	US002
UN0339	US032
UN0340	US072
UN0341	US072
UN0342	US013
UN0343	US013
UN0344	US029
UN0345	US029
UN0346	US029
UN0347	US029
UN0348	US033
UN0349	US072
UN0350	US072
UN0351	US072
UN0352	US072
UN0353	US072
UN0354	US072

EXPLOSIVES TABLE—Continued

Identification No. (1)	Packaging methods (2)
UN0355	US072
UN0356	US072
UN0357	US072
UN0358	US072
UN0360	US028
UN0361	US028
UN0362	US023
UN0363	US023
UN0364	US048
UN0365	US048
UN0366	US048
UN0367	US055
UN0368	US055
UN0369	US029
UN0370	US029
UN0371	US029
UN0372	US056
UN0373	US067
UN0374	US069
UN0375	US069
UN0376	US060
UN0377	US059
UN0378	US059
UN0379	US036
UN0380	US072
UN0381	US034
UN0382	US072
UN0383	US072
UN0384	US072
UN0385	US002
UN0386	US002
UN0387	US002
UN0388	US002
UN0389	US002
UN0391	US006
UN0392	US010
UN0393	US012
UN0394	US020
UN0395	US072
UN0396	US072
UN0397	US072
UN0398	US072
UN0399	US072
UN0400	US072
UN0401	US002
UN0402	US002
UN0403	US051
UN0404	US051
UN0405	US035
UN0406	US021
UN0407	US021
UN0408	US055
UN0409	US055
UN0410	US055
UN0412	US032
UN0413	US032
UN0414	US039
UN0415	US019
UN0416	US019
UN0417	US032
UN0418	US051
UN0419	US051
UN0420	US051
UN0421	US051
UN0424	US029
UN0425	US029
UN0426	US029
UN0427	US029
UN0428	US031
UN0429	US031
UN0430	US052
UN0431	US052
UN0432	US052
UN0433	US002
UN0434	US029
UN0435	US029
UN0436	US062

EXPLOSIVES TABLE—Continued

Identification No. (1)	Packaging methods (2)
UN0437	US062
UN0438	US062
UN0439	US040
UN0440	US040
UN0441	US040
UN0442	US070
UN0443	US070
UN0444	US070
UN0445	US070
UN0446	US036
UN0447	US036
UN0448	US021
UN0449	US064
UN0450	US064
UN0451	US064
UN0452	US056
UN0453	US065
UN0454	US057
UN0455	US027
UN0456	US026
UN0457	US071
UN0458	US071
UN0459	US071
UN0460	US071
UN0461	US072
UN0462	US072
UN0463	US072
UN0464	US072
UN0465	US072
UN0466	US072
UN0467	US072
UN0468	US072
UN0469	US072
UN0470	US072
UN0471	US072
UN0472	US072
UN0473	US072
UN0474	US072
UN0745	US072
UN0476	US072
UN0477	US072
UN0478	US072
UN0479	US072
UN0480	US072
UN0481	US072
UN0482	US072
UN0484	US006
NA0124	US073
NA0331	US011
NA0411	US003
NA0473	US003

(c) Table of packaging methods: Packaging methods must be utilized in accordance with the following table.

(1) The first column lists, in alphanumeric sequence, the packaging methods prescribed for explosives according to the Explosives Table of paragraph (b) of this section with corresponding UN packaging method identifier in parentheses. If more than one set of packagings are authorized for a packaging method, it is noted with designations (a), (b), (i), (ii), etc.

(2) The second column specifies the inner packagings that are required. If inner packagings are not required, a notation of "Not necessary" or "Optional" appears in the column. The terms "Optional" and "Not necessary"

mean, at the shipper's choice a suitable inner packaging may be used, though not required. If intermediate packagings are required, it is so noted in this column. In addition, any special requirements regarding the inner packagings are specified with a "Note".

(3) The third column specifies the outer packagings which are permitted. If inner packagings and/or intermediate packagings are specified in the second column, then the packaging specified in the third column must be used as the outer packaging of a combination packaging; otherwise it may be used as a single packaging. Any special requirements regarding the outer packagings are specified with a "Note".

(4) The fourth column specifies, by numerical sequence, particular requirements or exceptions, if applicable. The exception or requirement associated with a particular number is explained in paragraph (d) of this section.

TABLE OF PACKAGING METHODS

(1)	(2)	(3)	(4)
US001 (UN-E1)(a)	Not necessary	Bags: Paper, multiwall, water resistant (5M2) Textile, sift-proof (5L2) Textile, water resistant (5L3) Plastic, woven, sift-proof (5H2) Plastic, woven, water resistant (5H3) Plastic, film (5H4)	
US001 (UN-E1)(b)	Bags: Paper, Kraft Plastic Sheets: Plastic	Barrels: Wood, removable head (2C2) Boxes: Wood, ordinary (4C1) Plywood (4D) Reconstituted wood (4F) Drums: Steel, removable head (1A2)	
US002 (UN-E2)	Receptacles: Metal, Paper, Plastic, Sheets: Plastic	Barrels: Wood, removable head (2C2) Boxes: Fiberboard (4G) Wood, ordinary (4C1) Plywood (4D) Reconstituted wood (4F) Drums: Fiber (1G) *Note:* Removable head plastic drums (1H2) are authorized for UN0219	1 for all entires. 2 for all entries except UN0402.
UN003 (UN-E3)	Bags: Plastic, Rubber, Textile, Rubberized textile *Intermediate* Bags: Plastic, Rubber, Textile, Rubberized textile Barrels: Wood Receptacles: Plastic	Barrles: Wood, removable head (2C2) Drums: Plastic, removable head (1H2) Steel, removable head (1A2) *Note:* Coatings other than lead are authorized for steel drums (1A2)	3, 4, 6.
US004 (UN-E4)(a)	Receptacles: Fiberboard, Metal, Paper, Plastic, Rubberized textile	Barrels: Wood, removable head (2C2) Boxes: Fiberboard (4G) Wood, sift-proof (4C2) Plywood (4D) Reconstituted wood (4F)	
US004 (UN-E4)(b)	Optional	Drums: Aluminum, removable head (1B2) Fiber (1G) Steel, removable head (1A2) *Note:* steel drums (1A2) must be dust tight.	
US005 (UN-E5)	Bags: Plastic Sheets: Paper, Kraft Paper, waxed	Boxes: Fiberboard (4G) Wood, sift-proof (4C2) Plywood (4D) Reconstituted wood (4F)	
US006 (UN-E6)(a)(i)	*For wetted explosives:* Bags: Plastic, Rubberized, textile	Barrels: Wood, removable head (2C2) Boxes: Fiberboard (4G) Wood, ordinary (4C1) Plywood (4D) Reconstituted wood (4F) Drums: Steel, removable head (1A2) Fiber (1G)	
US006 (UN-E6)(a)(ii)	*For wetted explosives:* Bags: Rubber, Textile, Rubberized textile, *Intermediate:* Bags: Rubber, Rubberized textile	Barrels: Wood, removable head (2C2) Drums: Steel, removable head (1A2) Fiber (1G)	
US006 (UN-E6)(b)	*For desensitized explosives:* Same as for wetted explosives except that any fiberboard boxes may be used as inner packaging and any textile bags as intermediate packaging	*For desensitized explosives:* Same as for wetted explosives except that any fiberboard boxes may be used as inner packagings and any textile bags as intermediate packaging	
US007 (UN-E8)	Receptacles: Waterproof material Sheets: Waterproof	Barrels: Wood, removable head (2C2) Boxes: Fiberboard (4G), Wood, ordinary (4C1) Plywood (4D) Reconstituted wood (4F) Drums: Fiber (1G)	5.

TABLE OF PACKAGING METHODS—Continued

(1)	(2)	(3)	(4)
US008 (UN–E9).....	Bags: Oil-resistant Sheets: Plastic Cans: Metal	Bags: Paper, multiwall water resistant (5M2) Textile, sift-proof (5L2) Textile, water resistant (5L3) Woven plastic, without inner lining or coating (5H1) Woven plastic, sift-proof (5H2) Woven plastic, water resistant (5H3) Plastic film (5H4) Boxes: Fiberboard (4G) Wood, ordinary (4C1) Plywood (4D) Drums: Fiber (1G) Steel, removable head (1A2) *Note:* If bags of 5H2, 5H3, or 5H4 are used, no inner packaging necessary.	5.
US009 (UN–E10).....	Bags: Waxed paper, Plastic, Rubberized textile	Barrels: Wood, removable head (2C2) Boxes: Wood, ordinary (4C1) Plywood (4D) Reconstituted wood (4F)	
US010 (UN–E11).....	Bags: Waxed paper, Plastic, Rubberized textile Sheets: Waxed paper, Plastic, Textile, Rubberized textile	Barrels: Wood, removable head (2C2) Boxes: Wood, ordinary (4C1) Fiberboard (4G) Plywood (4D) Reconstituted wood (4F) Drums: Fiber (1G)	
US011 (UN–E12).....	Bags: Oil-resistant Sheets: Plastic	Bags: Paper, multiwall, water resistant (5M2) Woven plastic, without inner lining or coating (5H1) Woven plastic, sift-proof (5H2) Woven plastic, water resistant (5H3) Plastic film (5H4) Textile, sift-proof (5L2) Textile, water resistant (5L3) Boxes: Fiberboard (4G) Wood, ordinary (4C1) Plywood (4D) Reconstituted wood (4F) Drums: Fiber (1G) Steel, removable head (1A2) *Note:* If bags of 5H2 or 5H3 are used, no inner packaging is necessary.	
US012 (UN–E13) (a).	*For wetted explosives* Bags: Plastic Sheets: Plastic	Barrels: Wood, removable head (2C2) Boxes: Fiberboard (4G) Wood, ordinary (4C1) Plywood (4D) Reconstituted wood (4F) Drums: Fiber (1G)	
US012 (UN–E13) (b).	*For dry explosives* Bags: Paper, Plastic Boxes: Fiberboard Sheets: Plastic	Barrels: Wood, removable head (2C2) Boxes: Fiberboard (4G) Wood, ordinary (4C1) Plywood (4D) Reconstituted wood (4F) Drums: Fiber (1G)	
US013 (UN–E15) (a).	Not necessary	Drums: Aluminum, removable head (1B2) Steel, removable head (1A2)	
US013 (UN–E15) (b).	Bags: Waterproof paper, Plastic, Rubberized textile Sheets: Plastic, Rubberized textile	Barrels: Wood removable head (2C2) Boxes: Wood, ordinary (4C1) Plywood (4D) Reconstituted wood (4F) Fiberboard (4G) Drums: Fiber (1G)	
US014 (UN–E17).....	Cans: Metal Receptacles: Glass, Plastic	Boxes: Wood, ordinary (4C1) Plywood (4D) Reconstituted wood (4F)	

TABLE OF PACKAGING METHODS—Continued

(1)	(2)	(3)	(4)
US015 (UN–E18).....	Bags: Paper, Plastic Sheets: Plastic	Barrels: Wood, removable head (2C2) Boxes: Fiberboard (4G) Wood, ordinary (4C1) Plywood (4D) Reconstituted wood (4F) Drums: Fiber (1G) Plywood (1D) Steel, removable head (1A2)	
US016 (UN–E19) (a).	Not necessary	Drums: Aluminum, removable head (1B2) Steel, removable head (1A2) Plastic, removable head (1H2)	7.
US016 (UN–E19) (b).	Bags: Plastic Sheets: Plastic	Barrels: Wood, removable head (1B2) Boxes: Wood, ordinary (4C1) Plywood (4D) Reconstituted wood (4F) Drums: Fiber (1G)	
US017 (UN–E20).....	Receptacles: Metal, Plastic, Wood	Boxes: Fiberboard (4G) Wood, ordinary (4C1) Plywood (4D) Reconstituted wood (4F) Steel, with inner-liner or coating (4A2) Drums: Fiber (1G)	53.
US018 (UN–E21).....	Boxes: Fiberboard Cans: Metal Receptacles: Waterproof paper, Plastic *Note:* Plastic used must not be liable to generate static electricity by contained substances	Boxes: Wood, sift-proof (4C2) Plywood (4D) Reconstituted wood (4F)	
US019 (UN–E22) (a).	Bags: Paper, Kraft, Plastic, Textile, Rubberized textile	Barrels: Wood, removable head (2C2) Boxes: Fiberboard (4G) Wood, ordinary (4C1) Wood, sift-proof (4C2) Plywood (4D) Reconstituted wood (4F) Drums: Fiber (1G) Plywood (1D)	
US019 (UN–E22) (b).	Receptacles: Fiberboard, Metal, Plastic	Boxes: Fiberboard (4G) Wood, ordinary (4C1) Wood, sift-proof (4C2) Plywood (4D) Reconstituted wood (4F)	10.
US019 (UN–E22) (c).	Not necessary	Drums: Steel, removable head (1A2) Fiber (1G) Plywood (1D) Jerricans: Steel (3A1) Steel, removable head (3A2)	8, 9, 10.
US020 (UN–E24) (a).	Bags: Rubber, Rubberized textile, Plastic	Boxes: Fiberboard (4G)	
US020 (UN–E24) (b).	Bags: Rubber, Rubberized textile, Plastic *Intermediate* Bags: Rubber, Rubberized textile, Plastic	Drums: Steel, removable head (1A2) with coating other than lead	
US021 (UN–E25).....	Bags: Plastic	Drums: Fiber (1G)	
US022 (UN–E26).....	Bags: Plastic Sheets: Plastic Receptacles: Metal, Paper, Plastic	Barrels: Wood, removable head (2C2) Boxes: Fiberboard (4G) Wood, ordinary (4C1) Plywood (4D) Reconstituted wood (4F) Drums: Fiber (1G) Bags: Plastic, sift-proof (5H2)	51.
US023 (UN–E102)..	Optional	Boxes: Wood, ordinary (4C1) Plywood (4D) Reconstituted wood (4F) Steel (4A1) Steel, with inner liner or coating (4A2) Fiberboard (4G) Crates: (For large articles) Drums: Steel, removable head (1A2) Fiber (1G)	13, 14, 16, 47.

TABLE OF PACKAGING METHODS—Continued

(1)	(2)	(3)	(4)
US024	Cans: Metal Receptacles: Glass Plastic	Boxes: Wood, ordinary (4Cl) *Note:* DOT Spec. MC–200, motor vehicle container may be used as the outer packaging.	
US025	Optional	Boxes: Fiberboard (4G) Plywood (4D) Reconstituted wood (4F) Wood, sift-proof (4C2) *Note:* Wood boxes (4C1) may be used if the fireworks are packed in fiberboard box inner packagings.	
US026 (UN–E104)	Receptacles: Fiberboard, Metal, Paper	Boxes: Fiberboard (4G) Wood, ordinary (4Cl) Plywood (4D) Reconstituted wood (4F) Steel, with inner liner or coating (4A2)	5, 15, 16, 17, 18, 19, 20.
US027 (UN–E105)	Receptacles: Fiberboard, Metal, Plastic *Intermediate:* Boxes: Fiberboard, Wood Sheets: Paper, Kraft, Plastic	Boxes: Fiberboard (4G) Wood, ordinary (4C1) Plywood (4D) Reconstituted wood (4F) Steel, with inner liner or coating (4A2)	5, 15, 16, 17, 18, 19, 20, 21, 22, 52.
US028 (UN–E105A).	Receptacles: Fiberboard, Metal, Paper	Boxes: Fiberboard (4G) Wood, ordinary (4C1) Plywood (4D) Reconstituted wood (4F) Steel, with inner liner or coating (4A2)	5, 15, 16, 17, 18, 20, 24, 25, 26, 27.
US029 (UN–E106)	Not necessary	Boxes: Wood, ordinary (4C1) Plywood (4D) Reconstituted wood (4F) Steel (4A1) Cradles Crates	14 & 16 for all entries 48 for all entries except UN0434 and UN0435.
US030 (UN–E107)(a).	Not necessary *Note:* This packaging method is to be used for boosters which are finished articles consisting of closed metal, plastic, or fiberboard receptacles that contain a detonating explosive, or consisting of a plastic-bonded detonating explosive	Boxes: Fiberboard (4G) Wood, ordinary (4Cl) Plywood (4D) Reconstituted wood (4F) *Note:* This packaging method is to be used for boosters which are finished articles consisting of closed metal, plastic, or fiberboard receptacles that contain a detonating explosive, or consisting of a plastic-bonded, detonating explosive	
US030 (UN–E107)(b).	Receptacles: Fiberboard, Metal, Plastic Sheets: Plastic, Paper *Note:* This packaging method is to be used for cast or pressed boosters in tube or capsules without end closures.	Boxes: Fiberboard (4G) Wood, ordinary (4C1) Plywood (4D) Reconstituted wood (4F) *Note:* This packaging method is to be used for cast or pressed boosters in tube or capsules without end closures.	
US031 (UN–E109)	Receptacles: Metal, Plastic, Wood	Boxes: Wood, ordinary (4C1) Plywood (4D) Reconstituted wood (4F) Steel, with inner liner or coating (4A2)	16, 28.
US032 (UN–E112)	Boxes: Fiberboard, Metal, Plastic, Wood *Note:* Metal clips or dividing partitions in the outer packaging may be used in place of inner packaging	Boxes: Fiberboard (4G) Wood, ordinary (4C1) Plywood (4D) Reconstituted wood (4F) Steel (4A1) Steel, with inner liner or coating (4A2) Drums: steel, removable head (1A2)	13, 14.
US033 (UN–E113)	Receptacles: Fiberboard, Plastic, Metal	Boxes: Fiberboard (4G) Wood, ordinary (4C1) Plywood (4D) Reconstituted wood (4F)	14.
US034 (UN–E114)	Receptacles: Fiberboard, Plastic, Metal, Wood	Boxes: Fiberboard (4G) Wood, ordinary (4C1) Plywood (4D) Reconstituted wood (4F) Steel, with inner liner or coating (4A2)	14 for entries of UN0275, UN0276, and UN0381.

TABLE OF PACKAGING METHODS—Continued

(1)	(2)	(3)	(4)
US035 (UN-E115).	Receptacles: Fiberboard, Metal, Paper, Kraft (for cartridge of 1.4G and 1.4S) Plastic, Wood	Boxes: Fiberboard (4G) Wood, ordinary (4C1) Plywood (4D) Reconstituted wood (4F) Steel, with inner liner or coating (4A2)	
US036 (UN-E116) ..	Bags: Plastic, Textile Boxes: Fiberboard, Plastic, Wood *Note:* (1) Bags are authorized for small cases only. (2) Dividing partitions in the outer packaging may be used in place of inner packagings	Boxes: Fiberboard (4G) Wood, ordinary (4C1) Plywood (4D) Reconstituted wood (4F) Steel (4A1)	
US037 (UN-E117) ..	Boxes: Fiberboard, Metal, Plastic, Wood Cans: Metal	Boxes: Wood, ordinary (4C1) Plywood (4D) Reconstituted wood (4F) Steel, with inner liner or coating (4A2)	14
US038.....	Not necessary	Cradles, Crates	14, 50.
US039 (UN-E119) ..	Not necessary	Boxes: Wood, ordinary (4C1) Wood, sift-proof (4C2) Plywood (4D) Reconstituted wood (4F) Steel (4A1) Steel, with inner liner or coating (4A2) Drums: Steel, removable head (1A2) *Note:* Packaging 4C1 is authorized for cased charges only	14, 50.
US040 (UN-E120) ..	Tubes: Fiberboard, Other materials *Notes:* Dividing partitions in the outer packaging may be used in place of inner packagings	Boxes: Fiberboard (4G) Wood, ordinary (4C1) Plywood (4D) Reconstituted wood (4F)	29, 30.
US041 (UN-E121) ..	Not necessary	Boxes: Fiberboard (4C1) Wood, ordinary (4C1) Plywood (4D) Reconstituted wood (4F) Steel, with inner liner or coating (4A2)	31.
US042 (UN-E122) ..	Boxes: Metal, Plastic, Wood, Fiberboard	Boxes: Fiberboard (4G) Wood, ordinary (4C1) Plywood (4D) Reconstituted wood (4F) Steel, with inner liner or coating (4A2)	14.
US043 (UN-E123) ..	Receptacles: Fiberboard, Metal *Note:* Dividing partitions in the outer packaging may be used in place of inner packagings.	Boxes: Wood, ordinary (4C1), with metal liner Plywood (4D) Reconstituted wood (4F) Steel (4A1)	15, 16, 34, 50.
US044 (UN-E124) ..	Optional	Boxes: Fiberboard (4G) Wood, ordinary (4C1) Plywood (4D) Reconstituted (4F)	14, 32, 54.
US0045 (UN-E125).	Bags: Plastic Sheets: Paper, Kraft, Plastic *Note:* Reels may be used in place of inner packagings	Boxes: Fiberboard (4G) Wood, ordinary (4C1) Plywood (4D) Reconstituted wood (4F)	33.
US046 (UN-E126) ..	Receptacles: Fiberboard *Note:* Reels may be used in place of inner packagings	Boxes: Fiberboard (4G) Wood, ordinary (4C1) Plywood (4D) Reconstituted wood (4F)	14.
US047 (UN-3127)...	Receptacles Fiberboard	Boxes: Wood, oridinary (C1) Steel, with inner liner or coating ($A2)	14.
US048 (UN-E128) ..	Boxes: Fiberboard, Plastic, Wood Trays: Fiberboard, Plastic, Wood Cans: Metal *Note:* All inner packagings must be fitted with dividing partitions	Boxes: Wood, ordinary (4C1) Plywood (4D) Reconstituted wood (4F) Steel (4A1)	16, 23, 35.
US049 (UN-E129) ..	Receptacles: Fiberboard, Plastic Sheets: Paper	Boxes: Fiberboard (4G) Wood, ordinary (4C1) Plywood (4D) Reconstituted wood (4F) Drums: Fibert (1G)	14, 16, 36.

TABLE OF PACKAGING METHODS—Continued

(1)	(2)	(3)	(4)
US050 (UN-E130) ..	Receptacles: Fiberboard, Plastic Sheets: Paper	Boxes: Fiberboard (4G) Wood, ordinary (4C1), Plywood (4D) Reconstituted wood (4F) Drums: Fiber (1G)	14.
US051 (UN-E133) ..	Receptacles: Fiberboard, Metal, Plastic Sheets: Paper, Kraft *Note:* Dividing partitions in the outer package may be used in place of inner packagings	Boxes: Fiberboard (4G) Wood, ordinary (4C1) Plywood (4D) Reconstituted wood (4F) Steel (4A1) Solid plastics (4H2) Drums: Fiber (1G) Plastic, removable head (1H2)	14.
US052 (UN-E134) ..	Receptacles: Fiberboard, Metal, Plastic, Wood	Boxes: Fiberboard (4G) Wood, ordinary (4C1) Plywood (4D) Reconstituted wood (4F) Steel (4A1)	14.
US053 (UN-E135) ..	Bags: Plastic, Reels Sheets: Paper, Kraft, Plastic	Boxes: Fiberboard (4G) Wood, ordinary (4C1) Plywood (4D) Reconstituted wood (4F)	
US054 (UN-E136) ..	Not necessary	Boxes: Fiberboard (4G) Wood, ordinary (4C1) Plywood (4D) Reconstituted wood (4F) Steel, with inner liner or coating (4A2) Drums: Fiber (1G)	31.
US055 (UN-E137) ..	Receptacles: Fiberboard, Metal, Plastic, Wood Trays: Plastic, Wood *Note:* Dividing partitions in the outer packaging may be used in place of inner packagings	Boxes: Wood, ordinary (4C1) Plywood (4D) Reconstituted wood (4F) Steel (4A2)	14, 16, 37.
US056 (UN-E138) ..	Optional	Boxes: Wood, ordinary (4C1) Plywood (4D) Reconstituted wood (4F) Steel (4A1)	14, 16.
US057 (UN-E139) ..	Receptacles: Metal, Plastic, Wood	Boxes: Wood, ordinary (4C1) Plywood (4D) Reconstituted wood (4F) Steel with inner liner or coating (4A2)	14, 16 for all entries 28 for UN0121 only.
US058 (UN141).....	Receptacles: Fiberboard, Metal, Wood Sheets: Paper Trays: Plastic	Boxes: Fiberboard (4G) Wood, ordinary (4C1) Plywood (4D) Reconstituted wood (4F) Steel, with inner liner or coating (4A2)	
US059 (UN-E142) ..	Boxes: Fiberboard, Metal, Plastic, Wood Cans: Metal Trays: Fiberboard, sleeved, Plastic, sleeved *Intermediate:* (Optional with inner boxes but mandatory with trays.) Boxes: Fiberboard	Boxes: Fiberboard (4G) Wood, ordinary (4C1) Plywood (4D) Reconstituted wood (4F) Steel, with inner liner or coating (4A2)	5, 38, 39, 40.
US060 (UN-E143) ..	Boxes: Fiberboard, Metal, Wood Tubes: Fiberboard Trays: Plastic	Boxes: Wood, ordinary (4C1) Plywood (4D) Reconstituted wood (4F) Steel (4A1)	14, 16.
US061 (UN-E145) ..	Receptacles: Fiberboard, Metal (for rivets, explosives) Plastic, Wood	Boxes: Fiberboard (4C1) Plywood (4D) Reconstituted wood (4F) Steel, with inner liner or coating (4A2)	
US062 (UN-E146) ..	Not necessary	Boxes: Fiberboard (4G) Plywood (4D) Reconstituted wood (4F) Steel (4A1) Wood, ordinary (4C1)	14, 16.

TABLE OF PACKAGING METHODS—Continued

(1)	(2)	(3)	(4)
US061 (UN–E145)	Receptacles: Fiberboard, Metal (for rivets, explosives) Plastic, Wood	Boxes: Fiberboard (4C1) Plywood (4D) Reconstituted wood (4F) Steel, with inner liner or coating (4A2)	
US062 (UN–E146)	Not necessary	Boxes: Fiberboard (4G) Plywood (4D) Reconstituted wood (4F) Steel (4A1) Wood, ordinary (4C1)	14, 16.
US063 (UN–E146)	Not necessary	Boxes: Fiberboard (4G) Wood, ordinary (4C1) Plywood (4D) Reconstituted wood (4F)	14, 16.
US064 (UN–E146)	Not necessary	Boxes: Steel (4A1) Wood, ordinary (4C1) Plywood (4D) Reconstituted wood (4F)	14, 16.
US065 (UN–E147)	Receptacles: Fiberboard, Metal	Boxes: Fiberboard (4G) Wood, ordinary (4C1) Drums: Fiber (1G)	
US066 (UN–E149)	Optional	Boxes: Wood, ordinary (4C1)	15, 16, 41, 49
US067 (UN–E150)	Boxes: Fiberboard Receptacles: Metal, Plastic Sheets: Paper, Kraft	Boxes: Fiberboard (4G) Wood, ordinary (4C1) Plywood (4D) Reconstituted wood (4F) Steel (4A1) Drums: Fiber (1G)	12, 15.
US068 (UN–E151)	Receptacles: Metal, Plastic, Wood, Fiberboard	Boxes: Fiberboard (4G) Wood, ordinary (4C1) Plywood (4D) Reconstituted wood (4F) Steel (4A1) Drums: Fiber (1G)	42, 43, 44.
US069 (UN–E153)	Sheets: Fiberboard, corrugated Tubes: Fiberboard *Intermediate:* Receptacles: Fiberboard, Metal, Plastic	Boxes: Wood, ordinary (4C1) Plywood (4D) Reconstituted wood (4F) Steel (4A1)	45.
US070 (UN–E156)	Bags: Plastic Boxes: Fiberboard Tubes: Fiberboard, Plastic, Metal *Note:* Dividing partitions in the outer packaging may be used in place of inner packaging	Boxes: Fiberboard (4G) Wood, ordinary (4C1) Plywood (4D) Reconstituted wood (4F) Steel (4A1) Steel, with inner liner or coating (4A2)	15.
US071 (UN–E157)	Not necessary	Boxes: Wood, ordinary (4C1) Plywood (4D) Reconstituted wood (4F) Steel (4A1)	14, 16.
US072 (UN–E103)	Must be specifically authorized prior to transportation. See §§ 173.56 and 173.57 of this subchapter. For an international shipment, the package must be marked with "Packaging authorized by competent authority of the United States of America (USA)."		
US073	Jet perforating guns, charged, oil well, may be transported under the following conditions: (1) Only by private highway carriers engaged in oil well operations. (2) No initiation devices (detonator, blasting cap, electric or non-electric) may be affixed to or installed in guns. (3) Motor vehicles must have specifically built racks or carrying cases designed and constructed so that the guns are securely held in place during transportation and are not subject to damage by contact, one to the other or other articles or materials carried on the vehicle. (4) Each shaped charge affixed to the gun may not contain more tha 112 grams (4 ounces) of explosives. (5) Each shaped charge, if not completely enclosed in glass or metal, must be fully protected by a metal cover after installation in the gun. (6) The assembled gun or guns packed on the vehicle may not extend beyond the body of the motor vehicle and must be secured in the body of the motor vehicle in a fixed position so as to prevent movement relative to each other or in the body of the motor vehicle. (7) Initiation devices carried on the same motor vehicle must be segregated; each kind from every other kind, and from the guns, tools, or other supplies. Initiation devices shall be carried in a container having individual pockets for each such device or in a fully enclosed steel container lined with a non-sparking material. No more than two initiation devices per gun shall be carried on the same motor vehicle.	

(d) Table of particular packaging requirements or exceptions.

Number identifying packaging requirement or exception	Explanation of packaging requirement or exception
1	Water soluble substances must be packed in waterproof receptacles.
2	Packages must be lead free.
3	The barrels and drums must have a watertight seal.
4	The intermediate and outer packagings must be filled with water or an appropriate water saturated material when the intermediate packaging is a rubber or rubberized textile bag.
5	The particular packing requirements are made in the interest of safety. They do not guarantee that articles so packed will be classified as shown. Assessment of the hazard must be made in accordance with the classification procedures described in § 173.56 of this subchapter.
6	The intermediate packaging must be secured within the outer packaging with spacers.
7	Metal drums used for powder paste must be so constructed that explosion is not possible by reason of increase in internal pressure from internal or external causes.
8	The inside of drums and jerricans must be galvanized, painted or otherwise protected. Bare steel must not come into contact with smokeless powder.
9	Drums or jerricans of steel must be constructed without pockets or crevices in which smokeless powder could be trapped or nipped.
10	Metal receptacles must be so constructed that the risk of explosion, by reason of increase in internal pressure from internal or external causes, is reduced.
11	The inner packagings must be sealed.
12	Outer boxes of natural wood may be provided with tin-plate liner having a sealed lid.
13	Open ends of inner packagings must be fitted with padded end caps or the outer packaging must be padded.
14	The articles must be secured to prevent significant movement.
15	The articles and inner packagings must be secured to prevent significant movement.
16	Nails must not be used to secure the lids of wooden packagings.
17	Quantity limitations for all detonators are as follows unless specifically defined for each type of detonator: (a) For detonators containing no more than 10 grams of explosive (excluding ignition and delay charges): (i) No more than 50 detonators may be packed in one inner packaging. (ii) No more than 500 detonators may be packed in one outer packaging. (b) For detonators containing no more than 3 grams of explosive (excluding ignition and delay charges): (i) No more than 100 detonators may be packed in one inner packaging. (ii) No more than 1000 detonators may be packed in one outer packaging. (c) There are no quantity limitations for detonators classed as 1.4B or 1.4S. The number of detonators that may be packed in each inner or outer (if inner packaging is not required) packaging is determined by: (i) The ability for that package to pass certain tests (see § 173.57 of this subchapter) that qualify the detonators to be classed as 1.4B or 1.4S; or (ii) The gross weight limitations of the packaging used.

Number identifying packaging requirement or exception	Explanation of packaging requirement or exception
18	Detonators containing no more than 1 gram explosive (excluding ignition and delay charges) that are electric blasting caps with leg wires 4 feet long or longer, delay connectors in plastic sheaths, or blasting caps with empty plastic tubing 12 feet long or longer may be packed as follows: (a) No more than 50 detonators in one inner packaging; (b) IME Standard 22 container or compartment is used as the outer packaging; (c) No more than 1000 detonators in one outer packaging; and (d) No material may be loaded on top of the IME Standard 22 container and no material may be loaded against the outside door of the IME Standard 22 compartment.
19	Inner packaging is not required for electric blasting caps when packed in pasteboard tubes, or when their leg wires are wound on spools with the caps either placed inside the spool or securely taped to the wire on the spool, so as to restrict freedom of movement of the caps and to protect them from impact forces. No more than 500 electric blasting caps shall be contained in one outer packaging.
20	Detonators that are classed as 1.4B or 1.4S and contain no more than 1 gram of explosive (excluding ignition and delay charges) must be packed as follows: (a) No more than 50 detonators in one inner packaging; (b) IME Standard 22 container is used as the outer packaging; (c) No more than 1000 detonators in one outer packaging; and (d) Each inner packaging is marked "1.4B Detonators" or "1.4S Detonators", as appropriate.
21	Intermediate packagings are required only for non-electric detonators that are blasting caps or delay connectors in metal tubes.
22	Detonators that are blasting caps (including percussion activated) or delay connectors in metal tubes must be packed as follows: (a) The detonators must be packed in an inner packaging with the open end of any detonator covered with appropriate cushioning material; (b) Inner packagings must be snugly packed in an intermediate packaging; (c) Intermediate packagings must be separated from the outside packaging by at least 25 mm (0.98 inch) of cushioning material; (d) Detonators containing no more than 10 grams of explosive (excluding ignition and delay charges) must be packed as follows: (i) No more than 50 detonators in one inner packaging. (ii) No more than 500 detonators in one outer packaging. (e) Detonators containing no more than 3 grams of explosive (excluding ignition and delay charges) must be packed as follows: (i) No more than 110 detonators in one inner packaging. (ii) No more than 5,000 detonators in one outer packaging.
23	The inner packagings must be separated from the outer packaging by a gap of not less than 25 mm (0.98 inch) of cushioning material, e.g., sawdust, wood wool.
24	Blasting caps are not required to be attached to the safety fuse, metal clad mild detonating cord, detonating cord, or shock tube.
25	Inner packagings are not required if the packing configuration restricts freedom of movement of the caps and protects them from impact forces.
26	Quantity limitations for detonator assemblies with detonating cord are: (a) No more than 50 detonator assemblies shall be packed in one inner packaging. (b) No more than 500 detonator assemblies shall be packed in one outer packaging.
27	Quantity limitations for detonator assemblies with safety fuse or shock tube are: (a) No more than 50 detonator assemblies shall be packed in one inner packaging. (b) No more than 1,000 detonator assemblies shall be packed in one outer packaging.
28	Metal inner packagings must be padded with cushioning material.
29	The shaped charges must be packed so that contact between them is prevented.
30	The conical cavities of the shaped charges must face inward in pairs or groups to minimize the shaped charge (jetting) effect in the event of accidental initiation.
31	The ends of the articles must be sealed.
32	The ends of the detonating cord must be sealed and tied fast.
33	The ends of the detonating cord must be sealed. Spaces must be filled with packing material.
34	Packagings must be sealed against the ingress of water.
35	The detonators must be cushioned to prevent significant movement and contact between them.
36	Venturis of rockets (fireworks) must be plugged and means of ignition fully protected.
37	The detonating fuses must be separated from each other in the inner packaging.
38	Primers fitted with anvil, composition not covered with a disc of metal foil or other material (varnished only). (a) The primers must be packed in rows in single layers in trays of fiberboard or plastic. (b) Not more than 500 primers shall be packed in an inner packaging.
39	Primers not fitted with an anvil, composition covered, not more than 5,000 primers shall be packed in an inner packaging.
40	The primers must be packed with shock absorbent layers of felt, paper or plastic to prevent propagation within the outer packaging.
41	The outer plastic packagings must be reinforced with metal at corners and edge.
42	The signals must be separated to prevent contact with one another and kept apart from the bottom, walls, and lid of the outer packaging, e.g., by cushioning material.
43	Where the signals are contained in magazines for fitting into automatic units, the magazine may replace the inner packaging provided adequate cushioning material is used.
44	Tin-plate inner packagings must be sealed.
45	The sounding device must be wrapped individually in corrugated fiberboard sheets or inserted in fiberboard tubes.
46	Absorbent cushioning material must be inserted.
47	Large articles without propelling charge and without means of ignition or initiation may be carried unpacked.
48	Large articles without their means of initiation may be carried unpackaged.
49	Large articles without their means of ignition may be carried unpackaged.
50	Large articles may be carried unpackaged.
51	Bags, sift-proof (5H2) recommended only for flake or prilled TNT in the dry state and a maximum net mass of 30 kg (66.1 pounds).
52	Plastic inner packagings must not be liable to generate sufficient static electricity that a discharge could cause the packaged articles to function.
53	Not more than 50 grams (1.75 ounces) of a substance shall be packed in an inner packaging.
54	Shall not be packed in the same package with detonators or with any detonating explosive.

§ 173.63 Packaging exceptions.

(a) Cord, detonating (UN 0065), having an explosive content not exceeding 6.5 grams (100 grains) per 30 centimeter length (one linear foot) may be offered for transportation domestically and transported as Division 1.4 Compatibility Group D (1.4D) explosives, if the gross weight of all packages containing Cord, detonating (UN0065), does not exceed 45 kg (99.2 pounds) per:

(1) transport vehicle, freight container, or cargo only aircraft;

(2) off-shore down hole tool pallet carried on an off-shore supply vessel;

(3) cargo compartment of a cargo vessel; or

(4) passenger-carrying aircraft used to transport personnel to remote work sites, such as offshore drilling units.

(b) Detonating fuzes or ignition devices must not be assembled in the articles or included in the same outside package with the articles unless shipped by or for the DOD and in accordance with established practices and procedures specified by DOD.

(c) Smokeless powder for small arms in quantities not exceeding 45 kilograms (99.2 pounds) net weight transported in one rail car or motor vehicle may be classed as a flammable solid when the completed package has been examined for this classification by the Bureau of Explosives or the Bureau of Mines and approved by the Director, OHMT. Maximum quantity in any inside packaging must not exceed 3.6 kilograms (7.9 pounds) and inside packagings must be arranged and protected to prevent simultaneous ignition of the contents.

(d) Rocket motors may be shipped in a propulsive state or with igniters assembled therein only under conditions approved by the Department of Defense (DOD) or the National Aeronautics and Space Administration (NASA).

(e) Rocket motors, liquid fueled or cartridges, power devices (other than in Division 1.4) may not be shipped with igniters assembled therein unless shipped by or for the DOD or NASA in accordance with established practices and procedures specified by DOD or NASA.

(f) Packaging for cartridges, small arms, as ORM–D must be as follows:

(1) Ammunition must be packed in inside boxes or in partitions which fit snugly inside the outside packaging or in metal clips;

(2) Primers must be protected from accidental initiation;

(3) Inside boxes, partitions, or metal clips must be packed in securely closed strong outside packagings; and

(4) Maximum gross weight is limited to 30 kilograms (66.1 pounds) per package.

(g) Jet perforating guns classed as 1.4D may be offered for transportation and transported by private offshore supply vessels only when the guns are carried in the manner described in Packaging Method US073 or on offshore down hole tool pallets provided that:

(1) The total explosive contents does not exceed 9.1 kilograms (20 pounds) per pallet;

(2) Each cargo vessel compartment may contain up to 90.5 kilograms (199.5 pounds) of explosive content if the segregation requirements of § 176.83(b)(3) of this subchapter are met; and

(3) When more than one vehicle or pallet is stowed "on deck" a minimum horizontal separation distance of 3 meters (9.8 feet) must be provided.

14. Appendix D would be added to part 173 to read as follows:

Appendix D—Test methods for dynamite (Explosive, blasting, type A).

1. Test Method D–1—Leakage Test

A wooden stick, 114mm (4.5 inches) long and 4.8mm (0.2 inch) in diameter, with a sharpened end is used to punch 5 holes in one end of the wrapper of a dynamite cartridge. A cork stopper is placed on the bottom of a glass volumetric cylinder. The dynamite cartridge is placed, perforated end down, resting on the cork stopper in the cylinder. The entire assembly is placed in an oven at 37.8 °C. (100 °F.) for 48 hours and then examined visually for evidence of leakage.

2. Test Method D–2—Centrifugal Exudation Test

The test apparatus consists of a glass tube, 135mm (5.3 inches) long and one inch in diameter, with both ends open, and is assembled in the following manner:

(i) place a plastic plug of diameter equal to the inner diameter of the glass tube to close the bottom;

(ii) place a small amount of absorbent cotton on top of the plug;

(iii) place a plastic disk that matches the inner diameter to the glass tube and has seven small perforations on top of the cotton; and

(iv) place 10 grams (154 grains) of the dynamite sample on top of the disk.

The assembled glass tube is then placed in a hand operated centrifuge and spun for one minute at 600 rpm (revolutions per minute). The dynamite sample is then removed from the glass tube and weighed. The percent of loss is then determined by the loss in weight of the dynamite sample.

3. Test method D–3—Compression Exudation Test

The entire apparatus for this test is shown in Figure 1 of this appendix. The test is conducted using the following procedures:

(i) A glass tube, 135mm (5.3 inches) long and one inch in diameter, is held on a wooden base;

(ii) a small amount of absorbent cotton is placed into the bottom of the glass tube;

(iii) 10 grams (154 grains) of dynamite sample is placed on top of the cotton in the glass tube;

(iv) a small amount of absorbent cotton is placed on top of the dynamite sample;

(v) a plastic disk that matches the inner diameter of the glass tube and has seven small perforations is placed on top of the cotton;

(vi) a plastic plug matching the inner diameter of the glass tube is then placed on top of the disk;

(vii) the glass tube assembly is placed under the compression rod and compression is applied by means of the weight on the metal lever rod. The sample is compressed for one minute; and

(viii) the dynamite sample is then removed from the glass tube and weighed to determine the percent weight loss.

BILLING CODE 4910–60–M

FIGURE 1
COMPRESSION APPARATUS

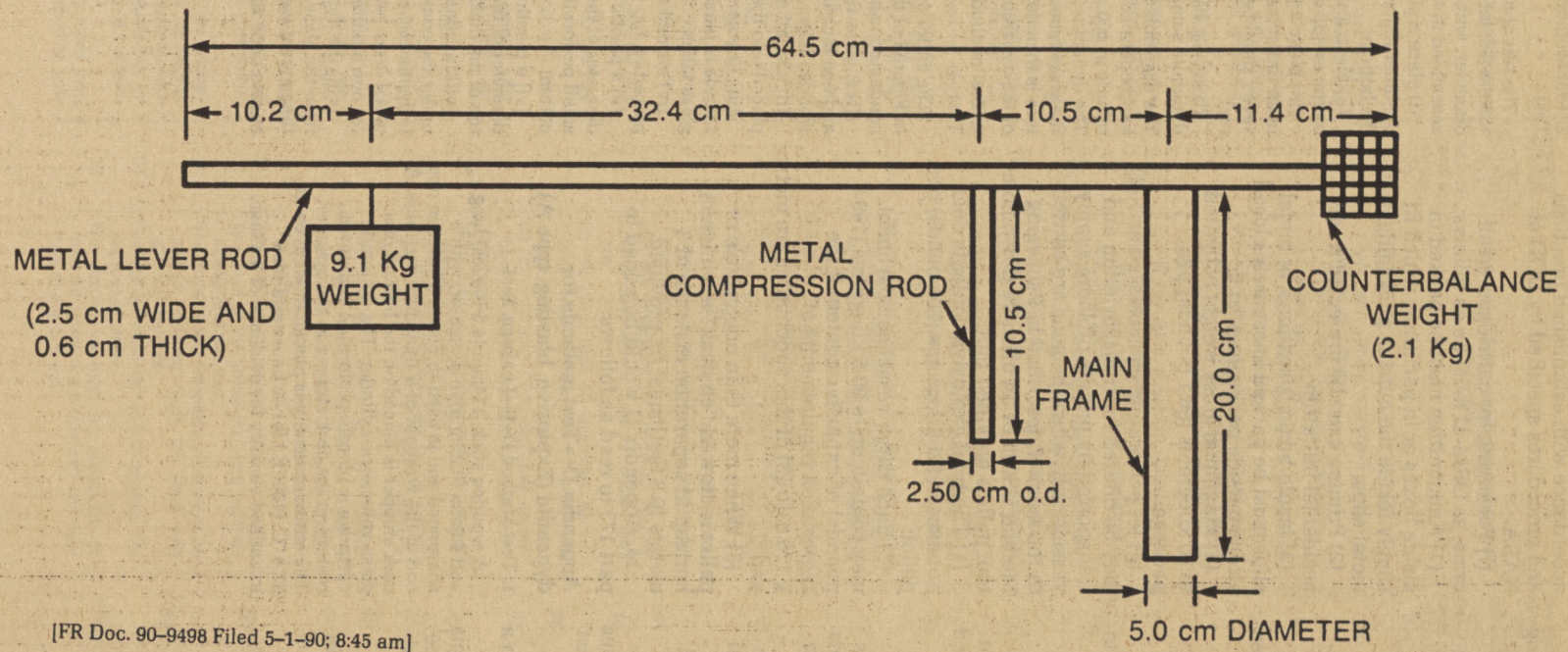

[FR Doc. 90–9498 Filed 5–1–90; 8:45 am]
BILLING CODE 4910–60–C

federal register

Wednesday
May 2, 1990

Part III

Department of Housing and Urban Development

Office of the Secretary

24 CFR Part 49 et al.

Temporary Disqualification From Financial Assistance of Aliens Granted Temporary/ Permanent Resident Status; Final Rule

DEPARTMENT OF HOUSING AND URBAN DEVELOPMENT

Office of the Secretary

24 CFR Parts 49, 203, 207, 213, 221, 234, 237, 510, and 570

[Docket No. R-90-1477; FR-2600-F-01]

RIN Number 2501-AA77

Temporary Disqualification From Financial Assistance of Aliens Granted Temporary/Permanent Resident Status

AGENCY: Office of the Secretary, HUD.

ACTION: Final rule.

SUMMARY: This rule implements a final rule published by the Immigration and Naturalization Service (INS) of the Department of Justice on July 12, 1989 (54 FR 29434). The INS rule amended 8 CFR part 245a to list a number of Federal programs, including a number of HUD programs, that are subject to a statutory restriction against the receipt of certain governmental benefits for a period of five years from the adjustment of an individual's immigration status to lawful resident status under a measure adopted by section 301 of the Immigration Reform and Control Act of 1986. This rule creates a new part 49 under the jurisdiction of the Office of the Secretary to state the restriction, since it applies to programs administered by more than one Assistant Secretary. Cross-references to that new part are then added to the various parts that govern the programs affected.

EFFECTIVE DATE: June 1, 1990.

FOR FURTHER INFORMATION CONTACT: For Block Grant Programs—Don Patch, Director, Office of Block Grant Assistance, (202) 755–6587; for the Urban Development Action Grants program—Roy Priest, Director, Office of Urban Development Action Grants, (202) 755–6290; for the Section 312 Rehabilitation Loan program—David Cohen, Director of Urban Rehabilitation, (202) 755–5685; for Multifamily Mortgage Insurance programs (223(e) and 221(d)(3) BMIR)—Donald A. Kaplan, Director, Office of Multifamily Housing Management, (202) 755–5730; and for Single Family Mortgage Insurance programs (223(e) and 237)—Stephen A. Martin, Director, Insured Single Family Housing, (202) 755–5210. (These are not toll-free telephone numbers.)

SUPPLEMENTARY INFORMATION:

I. Paperwork Reduction Act Statement

The Department has identified no information collection requirements in this rule that would require review by the Office of Management and Budget (OMB) under the Paperwork Reduction Act of 1980.

II. Background

Section 245A of the Immigration and Nationality Act, as adopted in 1986, permitted aliens who had been present illegally continuously since before January 1, 1982, to apply for legal resident status. Recognizing that many Federal benefit programs restrict participation to citizens and aliens who are lawful permanent residents of the United States, the statute also provided that these formerly illegal aliens would be prohibited from receiving Federal financial assistance furnished on the basis of financial need for a period of five years (section 245A(h) of the Immigration and Nationality Act, 8 U.S.C. 1101 note). The Attorney General, acting through the INS, was given authority by the statute to identify the programs to be covered, in consultation with the affected agencies.

The intent of the restriction, as stated in the preamble to the INS rule, was to minimize the financial burden of newly legalized aliens on U.S. taxpayers and to minimize the impact on citizens and lawful permanent residents of this increase in the number of persons eligible for these programs (54 FR 29435, July 2, 1989). The HUD programs listed by the INS as subject to this restriction do not require citizenship or lawful resident alien status for eligibility. (In fact, in many cases, the programs are intended to benefit broad classes of persons, and the individuals benefiting do so indirectly.) However, the INS determined that the programs satisfied its interpretation of the type of benefit to be covered by the statutory restriction. Thus, the anomaly results that illegal aliens may be eligible to receive these benefits, while alien residents who have been granted lawful resident status under section 245A of the INA are not eligible.

In discussions with the INS, HUD has been informed that an acceptable method of determining whether an applicant for a benefit is in the ineligible category of immigration status would be to request a certification of sttus at the time the benefit is to be provided. This position is reflected in the section on compliance, § 49.20.

The persons who are temporarily disqualified under section 245A are aliens who were granted lawful temporary resident status under that section, except for three categories of people: (1) Persons granted the status of lawful admission for permanent residence pursuant to section 249 of the INA (for certain admissions before July 1, 1924 or before January 1, 1972); (2) Cuban and Haitian entrants (as defined in paragraph (1) or (2) (A) of section 501(e) of Public Law 96–422, as in effect on April 1, 1983; and (3) persons who are at least 65 years of age or are blind or disabled.

In addition, individuals who are classified as Replenishment Agricultural Workers (RAWs) whose immigration status is adjusted to that of lawful admission for temporary or permanent residence under section 210A of the INA are disqualified under this rule, since section 210A(d)(6) states that the provisions of section 245A(h) apply to them. However, Special Agricultural Workers (SAWs) whose immigration status is adjusted to the status of lawful admission for temporary or permanent residence under section 210 of the INA are not affected by this rule.

A question has been raised about whether newly legalized aliens who are disqualified from participating in these programs are also disqualified from receiving Uniform Relocation Act benefits when they are required to move in connection with one of these programs. Since benefits are provided under that Act, in accordance 49 CFR part 24, not on the basis of financial need, but on the basis of displacement for a government program, HUD concludes that such aliens remain eligible for relocation benefits under the Act. (We also note that relocation benefits were not listed in the INS' rule that listed the programs affected by the disqualification.)

III. Programs Affected

The programs affected by this disqualification are the Community Development Block Grant program for small cities, for entitlement grants, and for States; the Urban Development Action Grants program; the section 312 Rehabilitation Loan program; mortgage insurance issued pursuant to section 237 (National Housing Act) for single family homes that are deemed to be special credit risks; mortgage insurance issued pursuant to section 223(e) (NHA) for housing in older, declining urban areas—both for single family and multifamily dwellings, and the section 221(d)(3) mortgage insurance program for below market interest rate projects.

However, the INS rule recognized that assisted activities in the Community Development Block Grant programs and the Urban Development Action Grant program are not limited to furnishing assistance on the basis of financial need. Therefore, these programs are covered only to the extent that a particular use of the grant funds is for

activities targeted to individuals in financial need. The disqualification applies where the use of these grant funds is targeted by restriction of benefits to persons with incomes below a certain level, or in a way that the assistance is intended to primarily benefit persons in financial need (except where the assisted activity serves the public at large, *e.g.*, sewers, roads, sidewalks, and parks) and the benefits are provided to persons on the basis of applications.

The section 312 loan program and the various mortgage insurance programs covered by this rule are subject to these restrictions not necessarily because the income of the applicant is below a certain level but because the loan or loan guarantee is made to persons otherwise unable to obtain financing at reasonable rates, or is made in a way that will primarily benefit persons in financial need.

IV. Applicability

The Department has determined that the disqualification should apply to new applicants for benefits in the listed programs, and not to individuals already receiving benefits. In consultation with the INS, HUD has determined that the date from which the five year disqualification starts to run is the effective date of the adjustment of status. In most cases, the effective date is not the date it is granted but the date of application for lawful status under section 245A, since grants of temporary status are generally made retroactive by the INS to the date of application. Since the deadline for applying for such temporary resident status under the section 245A legalization program was May 4, 1988, the disqualification period may expire by May 4, 1993 for most individuals.

If a person has applied for legal resident status under section 245A by the time of application for HUD-funded assistance but no final action has been taken by the INS, the applicant will not be barred from participation under this rule.

V. Effective Date

The INS final rule stated that it was effective on the date of its publication—July 12, 1989. It also stated that compliance with its requirements could begin at a later date specified by administering agencies, but no later than October 1, 1989.

The Department was unable to publish a rule in time for it to be effective by October 1, 1989. Under section 7(o)(3) of the Department of Housing and Urban Development Act (35 U.S.C. 3535(o)(3)) as it was in effect until December 15, 1989, HUD's rules could not become effective until 30 calendar days of continuous session of Congress following their publication. Under that statutory restriction, the HUD rule would have had to be published by July 31, 1989 in order to take effect by October 1, 1989. Since the INS final rule was not published until July 12, 1989, the Department did not have adequate time to develop its own final rule and process it for publication by July 31.

Since publication of the INS rule, the Department has been in contact with the INS about correcting its July rule with respect to two programs (the Rental Rehabilitation program and the Flexible Subsidy program), for which a correction document has been published by the INS (54 FR 49963, December 4, 1989). Neither program should have been included. The first was not actually included in the rule's list of covered programs but was described in the preamble as if it were. The second program was listed, although the INS had agreed with HUD's comment that it should not be.

The issue has arisen whether, in the case of a UDAG or CDBG grant, this rule's June 1, 1990, effective date applies to the time the Federal grant funds for the specific activity or project providing the benefit are obligated, or to the time that an ultimate beneficiary applies for and receives a benefit. The Department has concluded that Congress was concerned with the ultimate beneficiary's receipt of a benefit, and that the limitation on eligibility may be applied to a grant recipient after commitment of funds to a particular activity. This position is supported by the INS' suggestion in its rule that efficient administration of certain programs might require "a limited amount of 'grandfathering' " (54 FR 29437). This language implies that without such consideration for persons already receiving benefits, they too, could be deprived of benefits. Consequently, this rule provides that any applicant for a benefit who applies after the effective date of this rule is subject to the restrictions, regardless of the date the funds providing the benefit were obligated.

VI. Justification for Final Rule

Under the Department's regulations concerning rulemaking, 24 CFR part 10, rules are to be published for public comment before being issued for effect, unless the agency finds good cause to omit public participation. This good cause requirement is satisfied when prior public procedure is "impracticable, unnecessary, or contrary to the public interest." 24 CFR 10.1.

In this case, the INS has made a determination of the HUD programs affected by the statute by a rulemaking process that provided for public participation. This rule merely codifies the statutory restriction in the Department's own rules consistent with the requirements of the INS rule and gives guidance on how to apply the restriction. Therefore, the Department has determined that solicitation of public comment on the content of the HUD rule is unnecessary and would improperly delay further the implementation of the statutory restriction enacted in 1986.

VII. Findings and Certifications

Environment. A Finding of No Significant Impact with respect to the environment has been made in accordance with HUD regulations at 24 CFR part 50 that implement section 102(2)(C) of the National Environmental Policy Act of 1969, 42 U.S.C. 4332. The Finding of No Significant Impact is available for public inspection and copying between 7:30 a.m. and 5:30 p.m. weekdays in the Office of the Rules Docket Clerk, Room 10276, 451 Seventh Street, SW., Washington, DC 20410.

Executive Order 12291, Regulatory Planning Process. This rule does not constitute a "major rule" as that term is defined in section 1(b) of Executive Order 12291 issued by the President on February 17, 1981, and therefore no regulatory impact analysis is necessary. Excluding this new class of lawful resident aliens from participation in the programs identified will not have an annual effect on the economy of $100 million or more. Furthermore, it will not cause a major increase in cost or prices for consumers, individual industries, Federal, State, or local government agencies, or geographic regions, nor have a significant adverse effect on competition, employment, investment, productivity, innovation, or on the ability of United States-based enterprises to compete with foreign-based enterprises in domestic or export markets.

Regulatory Flexibility Act. Under the Regulatory Flexibility Act (5 U.S.C. 601), the Undersigned hereby certifies that this rule, as distinguished from the statute that mandates the disqualification, will not have a significant economic impact on a substantial number of small entities. The rule merely recites the disqualification required by the statute and suggests a self-certification approach to determining who is disqualified that will

minimize the impact on administrators of the programs affected.

Executive Order 12612, Federalism. The General Counsel, as the Designated Official under section 6(a) of Executive Order 12612, has determined that this rule, as distinguished from the statute that mandates the disqualification, will not have federalism implications and, thus, is not subject to review under the Order. The rule affects only the use of Federal funds in the hands of State of local government or a private project owner participating in a Federal program. It does not disturb the relationship between State or local governments and the Federal government.

Executive Order 12606, the Family. The General Counsel, as the Designated Official under Executive Order 12606, has determined that this rule, as distinguished from the statute that mandates the disqualification, does not have potential significant impact on family formation, maintenance, and general well-being, and, thus, is not subject to review under the Order.

Regulatory Agenda. This rule was listed as sequence number 1131 under the Office of the Secretary in the Department's semiannual agenda of regulations published on April 23, 1990 (55 FR 16226, 16237), under Executive Order 12291 and the Regulatory Flexibility Act.

Catalog. The Catalog of Federal Domestic Assistance Program numbers for this rule are 14.123, 14.136, 14.140, 14.218, 14.219, 14.220, 14.221, and 14.228.

Information Collection Requirements. There are no information collection requirements contained in this rule.

List of Subjects

24 CFR Part 49

Aliens, Grant programs—housing and community development, Loan programs—housing and community development, Mortgage insurance.

24 CFR Part 203

Home improvement, Loan programs—housing and community development, Mortgage insurance, Solar energy.

24 CFR Part 207

Mortgage insurance, Rental housing, Mobile home parks.

24 CFR Part 213

Mortgage insurance, cooperatives.

24 CFR Part 221

Condominiums, Low and moderate income housing, Mortgage insurance, Displaced families, Single family housing, Projects, Cooperatives.

24 CFR Part 234

Condominiums, Mortgage insurance, Homeownership, Projects, Units.

24 CFR Part 237

Low and moderate income housing, Mortgage insurance.

24 CFR Part 510

Loan programs—housing and community development, Housing, Relocation assistance, Home improvement, Rehabilitation, Urban renewal.

24 CFR Part 570

Community development block grants, Grant programs—housing and community development, Loan programs: housing and community development, Low and moderate income housing, New communities, Pockets of poverty, Small cities.

Accordingly, Title 24 of the Code of Federal Regulations is amended as follows:

1. A new part 49 is added, to read as follows:

PART 49—INELIGIBILITY OF CERTAIN PERSONS BASED ON ALIEN STATUS

Sec.

49.1 Purpose and applicability.
49.5 Programs affected.
49.10 Category of resident aliens affected.
49.15 Period of disqualification.
49.20 Compliance.
49.25 Distinction from other eligibility restrictions based on alien status.

Authority: Sec. 245A(h), Immigration and Nationality Act (8 U.S.C. 1101 note); sec. 7(d), Department of Housing and Urban Development Act (42 U.S.C. 3535(d)).

§ 49.1 Purpose and applicability.

(a) *Purpose.* The purpose of this rule is to decrease the cost to United States taxpayers of the legalization of certain newly legalized aliens by denying them eligibility to certain Federal financial assistance. The Immigration and Naturalization Service has determined that certain of HUD's programs fit its definition of Federal financial assistance that is to be covered: assistance is provided to eligible individuals, or to private suppliers of goods or services to individuals, and the assistance is targeted to individuals in financial need. The determination of financial need is made either on an individual basis or on the basis of intention to primarily benefit persons in financial need. In the case of a loan or loan guarantee program, the inability to obtain financing from alternative sources or at a prevailing or reasonable interest rate is sufficient to determine that the program provides assistance based on financial need. See 8 CFR 245a.5.

(b) *Applicability.* This disqualification applies to new applicants for benefits in the affected programs, and not to individuals already receiving benefits in the programs. If an applicant for benefits has already applied for legal resident status under section 245A of the Immigration and Nationality Act but no final action has been taken by the INS on the application for such status, the applicant will not be barred from participation in programs affected by this part (see § 49.5).

§ 49.5 Programs affected.

There are three principal types of programs affected by this disqualification. They are grouped as follows:

(a) *Single family mortgage insurance programs.* The programs affected are the following:

(1) Mortgage insurance issued pursuant to section 223(e) of the National Housing Act for housing in older, declining urban areas (see 24 CFR 203.43a, as well as § 213.45a for cooperatives and § 234.68 for condominiums); and

(2) Mortgage insurance issued pursuant to section 237 of the National Housing Act for mortgages that are deemed to be special credit risks (see 24 CFR 237.5).

(b) *Multifamily mortgage insurance programs.* The programs affected are the following:

(1) Mortgage insurance issued pursuant to section 223(e) of the National Housing Act for housing in older, declining urban areas (see 24 CFR 207.31a); and

(2) The mortgage insurance program for below market interest rate projects, administered pursuant to section 221(d)(5)—but often referred to as the section 221(d)(3) BMIR program (see 24 CFR 221.537).

(c) *Community Planning and Development Programs.* (1) The section 312 Rehabilitation Loan program (for single family and multifamily dwellings), administered under part 510 of this title is covered, in its entirety.

(2) The following programs are affected only to the extent that benefits provided under a particular activity are furnished to eligible individuals or are furnished to private suppliers of goods or services to such individuals and the benefits are targeted to individuals in financial need. An activity is so targeted if benefits are restricted to persons with incomes below a certain level or is provided in a way intended to primarily benefit persons in financial need, where the benefits are provided to persons on the basis of an application:

(i) The Community Development Block Grant program for small cities, administered under subpart F of part 570 of this title.

(ii) The Community Development Block Grant program for entitlement grants, administered under subpart D of part 570 of this title.

(iii) The Community Development Block Grant program for States, administered under subpart I of part 570 of this title.

(iv) The Urban Development Action Grants program, administered under subpart G of part 570 of this title.

§ 49.10 Category of resident aliens affected.

(a) *General.* The category of aliens affected by this part is any alien who has obtained the status of an alien lawfully admitted for temporary residence pursuant to section 245A or section 210A of the Immigration and Nationality Act. Section 245A provides for adjustment of status of certain aliens who have resided in the United States as unlawful residents since before January 1, 1982. Section 210A provides for determinations of agricultural labor shortages and admission of additional Special Agricultural Workers (Replenishment Agricultural Workers, or RAWs).

(b) *Exceptions.* There are three classes of resident aliens who are excepted from the coverage of this part:

(1) An alien granted the status of an alien lawfully admitted for permanent residence pursuant to section 249 of the Immigration and Nationality Act, as evidenced by a record of admission for permanent residence for certain aliens who entered the United States before July 1, 1924 or before January 1, 1972;

(2) A Cuban or Haitian entrant, as defined in paragraph (1) or (2)(a) of section 501(e) of Public Law 96–422 as it was in effect on April 1, 1983; and

(3) An alien who is aged, blind, or disabled, *i.e.*, at least 65 years of age, blind, or having a physical or mental impairment that is expected to last at least twelve months and that prevents the individual from engaging in any substantial gainful activity.

§ 49.15 Period of disqualification.

(a) Individuals who fall into the category of resident aliens described in § 49.10(a) are disqualified for a period of five years from the date such status is obtained, for being admitted to participation in receiving benefits from the programs enumerated in § 49.5.

(b) The disqualification period starts to run on the date lawful status is obtained, including any retroactive effect given by the INS to the date of application. Since the deadline for applying for such temporary resident status under the section 245A legalization program was May 4, 1988, the disqualification period may expire by May 4, 1993 for many individuals.

§ 49.20 Compliance.

Providers of benefits will be regarded as in compliance with this section if they obtain certifications from applicants that they are not in the status of restricted resident aliens.

§ 49.25 Distinction from other eligibility restrictions based on alien status.

The disqualification imposed by this part derives from section 245A of the Immigration and Nationality Act (8 U.S.C. 1101 note). It does not affect any of the applicants or participants in assisted housing programs that are subject to the restrictions imposed by the section 214 of the Housing and Community Development Act of 1980 (42 U.S.C. 1436 note). Participation in the programs covered by that statute is specifically permitted for the category of newly legalized aliens prohibited from participation under this part. (See 24 CFR parts 200, 812 and 912, for the principal rules implementing that statute.)

PART 203—MUTUAL MORTGAGE INSURANCE AND REHABILITATION LOANS

2. The authority citation for part 203 continues to read as follows:

Authority: Secs. 203, 211, National Housing Act (12 U.S.C. 1709, 1715b); sec. 7(d), Department of Housing and Urban Development Act (42 U.S.C. 3535(d)). In addition, subpart C is also issued under sec. 230, National Housing Act (12 U.S.C. 1715u).

3. In § 203.43a, a new paragraph (d) is added, to read as follows:

§ 203.43a Eligibility of mortgages covering housing in certain neighborhoods.

* * * * *

(d) For restrictions against approving mortgage insurance for a certain category of newly legalized alien, see 24 CFR part 49.

PART 207—MULTIFAMILY HOUSING MORTGAGE INSURANCE

4. The authority citation for part 207 continues to read as follows:

Authority: Secs. 207, 211, National Housing Act (12 U.S.C. 1713, 1715b); sec. 7(d), Department of Housing and Urban Development Act (42 U.S.C. 3535(d)). Sections 207.258 and 207.258b are also issued under section 203(e), Housing and Community Development Amendments of 1978 (12 U.S.C. 1701z–11(e)).

5. In §207.31a, a new paragraph (d) is added, to read as follows:

§ 207.31a Eligibility of mortgages covering housing in certain neighborhoods.

* * * * *

(d) For occupancy restrictions that apply to a certain category of newly legalized alien with respect to a project which has a mortgage determined to be eligible for insurance under this section, see 24 CFR part 49.

PART 213—COOPERATIVE HOUSING MORTGAGE INSURANCE

6. The authority citation for part 213 continues to read as follows:

Authority: Secs. 211, 213, National Housing Act (12 U.S.C. 1715b, 1715e); sec. 7(d), Department of Housing and Urban Development Act (42 U.S.C. 3535(d)).

7. In § 213.45a, a new paragraph (d) is added, to read as follows:

§ 213.45a Eligibility of mortgages covering housing in certain neighborhoods.

* * * * *

(d) For restrictions against approving mortgage insurance for a certain category of newly legalized alien, and for occupancy restrictions that apply to the same category of resident alien with respect to a project which has a mortgage determined to be eligible for insurance under this section, see 24 CFR part 49.

PART 221—LOW COST AND MODERATE INCOME MORTGAGE INSURANCE

8. The authority citation for part 221 continues to read as follows:

Authority: Secs. 211, 221, National Housing Act (12 U.S.C. 1715b, 1715*l*); sec. 7(d), Department of Housing and Urban Development Act (42 U.S.C. 3535(d)); section 544(a)(3) is also issued under sec. 201(a), National Housing Act (12 U.S.C. 1707(a)).

9. In § 221.537, a new paragraph (f) is added, to read as follows:

§ 221.537 Additional occupancy requirements; preferred purchasers or tenants.

(f) *Restriction with respect to resident aliens.* For restrictions against admission of certain newly legalized aliens, see 24 CFR part 49.

PART 234—CONDOMINIUM OWNERSHIP MORTGAGE INSURANCE

10. The authority citation for part 234 continues to read as follows:

Authority: Secs. 211, 234, National Housing Act (12 U.S.C. 1715b, 1715y); sec. 7(d), Department of Housing and Urban Development Act (42 U.S.C. 3535(d)). Section

234.520(a)(2)(ii) is also issued under sec. 201(a), National Housing Act (12 U.S.C. 1707(a)).

11. In § 234.68, a new paragraph (d) is added, to read as follows:

§ 234.68 Eligibility of mortgages covering housing in certain neighborhoods.

* * * * *

(d) For restrictions against approving mortgage insurance for a certain category of newly legalized alien, see 24 CFR part 49.

PART 237—SPECIAL MORTGAGE INSURANCE FOR LOW AND MODERATE INCOME FAMILIES

12. The authority citation for part 237 continues to read as follows:

Authority: Secs. 203, 211, 237, National Housing Act (12 U.S.C. 1709, 1715b, 1715z–2); sec. 7(d), Department of Housing and Urban Development Act (42 U.S.C. 3535(d)).

13. In § 237.5, a sentence is added at the end, to read as follows:

§ 237.5 Cross-reference.

* * * For restrictions against approving mortgage insurance for a certain category of newly legalized alien, see 24 CFR part 49.

PART 510—SECTION 312 REHABILITATION LOAN PROGRAM

14. The authority citation for part 510 continues to read as follows:

Authority: Sec. 312, United States Housing Act of 1964 (42 U.S.C. 1452b); sec. 7(d), Department of Housing and Urban Development Act (42 U.S.C. 3535(d)). Section 510.106 is also issued under the authority of sec. 165, Housing and Community Development Act of 1987 (42 U.S.C. 3543).

15. A new § 510.51 is added, to read as follows:

§ 510.51 Eligibility restrictions for certain resident aliens.

Certain newly legalized aliens, as described in 24 CFR part 49, are not eligible to apply for a rehabilitation loan under this part. Similarly, that category of resident aliens is not eligible to occupy units in a multifamily building rehabilitated with assistance under this part applied for after the effective date of 24 CFR part 49, so long as the loan is outstanding.

PART 570—COMMUNITY DEVELOPMENT BLOCK GRANTS

16. The authority citation for part 570 is amended to read as follows:

Authority: Title I, Housing and Community Development Act of 1974 (42 U.S.C. 5301–5320); sec. 7(d), Department of Housing and Urban Development Act (42 U.S.C. 3535(d)).

17. In § 570.496, a new paragraph (h) is added, to read as follows:

§ 570.496 Program requirements.

* * * * *

(h) *Eligibility restrictions for certain resident aliens.* The restrictions described in § 570.613 are applicable to the State's Program under this subpart.

18. A new § 570.613 is added, to read as follows:

§ 570.613 Eligibility restrictions for certain resident aliens.

(a) *Restriction.* Certain newly legalized aliens, as described in 24 CFR part 49, are not eligible to apply for benefits under covered activities funded by the programs listed in paragraph (e) of this section. "Benefits" under this section means financial assistance, public services, jobs and access to new or rehabilitated housing and other facilities made available under covered activities funded by programs listed in paragraph (e) of this section. "Benefits" do not include relocation services and payments to which displacees are entitled by law.

(b) *Covered activities.* "Covered activities" under this section means activities meeting the requirements of § 570.208(a) that either:

(1) Have income eligibility requirements limiting the benefits exclusively to low and moderate income persons; or

(2) Are targeted geographically or otherwise to primarily benefit low and moderate income persons (excluding activities serving the public at large, such as sewers, roads, sidewalks, and parks), and that provide benefits to persons on the basis of an application.

(c) *Limitation on coverage.* The restrictions under this section apply only to applicants for new benefits not being received by covered resident aliens as of the effective date of this section.

(d) *Compliance.* Compliance can be accomplished by obtaining certification as provided in 24 CFR 49.20.

(e) *Programs affected.* (1) The Community Development Block Grant program for small cities, administered under subpart F of part 570 of this title until closeout of the recipient's grant.

(2) The Community Development Block Grant program for entitlement grants, administered under subpart D of part 570 of this title.

(3) The Community Development Block Grant program for States, administered under subpart I of part 570 of this title until closeout of the unit of general local government's grant by the State.

(4) The Urban Development Action Grants program, administered under subpart G of part 570 of this title until closeout of the recipient's grant.

Dated: April 16, 1990.

Jack Kemp.
Secretary.

[FR Doc. 90–9774 Filed 5–1–90; 8:45 am]
BILLING CODE 4210–32–M

federal register

Wednesday
May 2, 1990

Part IV

Environmental Protection Agency

Hazardous Waste Management System: Identification and Listing of Hazardous Waste and CERCLA Hazardous Substance Designation and Reportable Quantity Adjustment—1,1-Dimethylhydrazine Production Wastes; Final Rule and Proposed Rule

ENVIRONMENTAL PROTECTION AGENCY

40 CFR Parts 261, 271, and 302

[SWH-FRL-3719-6]

RIN 2050-AC91

Hazardous Waste Management System: Identification and Listing of Hazardous Waste and CERCLA Hazardous Substance Designation and Reportable Quantity Adjustment—1,1-Dimethylhydrazine Production Wastes

AGENCY: Environmental Protection Agency.

ACTION: Final rule.

SUMMARY: The Environmental Protection Agency (EPA) today is amending the regulations for hazardous waste management under the Resource Conservation and Recovery Act (RCRA) by listing as hazardous four wastes generated during the production of 1,1-dimethylhydrazine (UDMH) from carboxylic acid hydrazides. The effect of this regulation is that these wastes will be subject to regulation under 40 CFR parts 262–266, and parts 270, 271, and 124.

In addition, the Agency also is making final amendments to regulations promulgated under the Comprehensive Environmental Response, Compensation, and Liability Act (CERCLA) in 40 CFR part 302 that are related to today's hazardous waste listings. In particular, EPA is making final the designation as CERCLA hazardous substances all of the wastes made final in today's rule and the final reportable quantities that would be applicable to those wastes.

EFFECTIVE DATE: This regulation becomes effective on November 2, 1990.

ADDRESSES: The official record for this rulemaking is identified as Docket Number F–90–DMHF–FFFFF and is located in the EPA RCRA Docket, Room 2427, 401 M Street SW., Washington, DC 20460. The public must make an appointment to review docket materials by calling (202) 475–9327. Copies of the non-CBI version of the listing background document, the Health and Environmental Effects Profiles (HEEPs), and not readily available references are available for viewing and copying only in the OSW docket. Copies of materials relevant to the CERCLA portions of this rulemaking are also located in Room 2427, U.S. EPA, 401 M Street SW., Washington, DC 20460. Both dockets are available for inspection from 9:00 a.m. to 4:00 p.m. Monday through Friday, excluding Federal holidays. The public may copy a maximum of 100 pages from the docket at no charge; additional copies are available at $0.15 per page.

FOR FURTHER INFORMATION CONTACT: The RCRA/Superfund Hotline at (800) 424–9346 or at (202) 382–3000. For technical information on the RCRA hazardous waste listings, contact Dr. Cate Jenkins, Office of Solid Waste (OS–332), U.S. Environmental Protection Agency, 401 M Street SW., Washington, DC 20460, (202) 382–4786. For technical information on the CERCLA final rule, contact Ms. Ivette Vega, Response Standards and Criteria Branch, Emergency Response Division (OS–210), U.S. EPA, 401 M St. SW., Washington, DC 20460, (202) 382–2463.

SUPPLEMENTARY INFORMATION: The contents of today's preamble are listed in the following outline:

I. Legal Authority
II. Background
III. Summary of the Final Regulation
IV. Response to Comments
  A. Concentration Level Criteria for Listing Waste as Hazardous
  B. Assessment Risk for UDMH in the Wastes
  C. Regulatory Impact Analysis
  D. Additional Waste Streams
V. Relation to Other Regulations
VI. Test Methods for Compound Added to Appendix VII
VII. CERCLA Impacts
VIII. State Authority
  A. Applicability of Rules in Authorized States
  B. Effect on State Authorizations
IX. Compliance Dates
  A. Notification
  B. Interim Status
X. Regulatory Impact Analysis
XI. Regulatory Flexibility Act
XII. Paperwork Reduction Act

I. Legal Authority

These regulations are being promulgated under the authority of sections 2002(a) and 3001 (b) and (e)(2) of the Solid Waste Disposal Act, as amended, 42 U.S.C. 6912(a) and 6921 (b) and (e)(2) (commonly referred to as RCRA), and section 102(a) of the comprehensive Environmental Response, Compensation, and Liability Act of 1980, 42 U.S.C. 9602(a).

II. Background

Pursuant to section 3001 of subtitle C of the Resource Conservation and Recovery Act (RCRA), EPA today promulgates final rules listing four wastes generated during the production of 1,1-dimethylhydrazine (UDMH) from carboxylic acid hydrazides. The following discussion provides a brief overview of regulatory actions affecting the wastes being finalized today.

On December 20, 1984, EPA proposed to amend the regulations for hazardous waste management under RCRA by listing as hazardous four wastes generated during the production of 1,1-dimethylhydrazine (see 49 FR 49556). These wastes are: (1) Column bottoms from product separation (EPA Hazardous Waste No. K107), (2) condensed column overheads from product separation and condensed reactor vent gases (EPA Hazardous Waste No. K108), (3) spent filter cartridges from product purification (EPA Hazardous Waste No. K109), and (4) condensed column overheads from intermediate separation (EPA Hazardous Waste No. K110).

The basis for this action was a determination by the Agency that these wastes contained significant concentrations of 1,1-dimethylhydrazine (UDMH). UDMH is carcinogenic, mutagenic, and teratogenic. UDMH is typically present in each waste at significant levels. In addition, UDMH is mobile and persistent, and can reach environmental receptors in harmful concentrations if these wastes are mismanaged. (See the preamble to the proposed listing for those wastes (49 FR 49556) and the Listing Background Document, available from the **ADDRESSES** section, for more information on the hazards of these wastes.)

On August 17, 1989, the Agency made available for public comment additional data which supports the conclusion that UDMH should be considered a potential human carcinogen (54 FR 33942). The Agency requested comments on the use of this new data as part of the basis for listing wastes generated from the manufacture of UDMH. The comments received on the December 20, 1984 proposal to list the four wastes and on the use of this new data are responded to in this **Federal Register** notice. These comments do not refute the Agency's conclusion that UDMH is carcinogenic, mutagenic and teratogenic.

In addition, in a document published elsewhere in today's **Federal Register**, EPA is proposing to list as hazardous two additional wastes generated during the production of UDMH from carboxylic acid hydrazides. These wastes are: (1) Flush water from the catalyst removal system, and (2) spent catalyst and filter media. As a result of comments received from a manufacturer of UDMH in response to the proposed listing of four wastes generated during the manufacture of UDMH (December 20, 1984, 49 FR 49556), the Agency received data that supports a preliminary determination that these two additional wastes also should be listed as hazardous.

On November 8, 1984, the Hazardous and Solid Waste Amendments of 1984 (HSWA) were enacted. These amendments had far reaching ramifications for EPA's hazardous waste regulatory program. Section 3001(e)(2), which was one of the many provisions added by HSWA, directed EPA to make a decision on whether or not to list certain specified wastes, including wastes from the manufacture of UDMH, as hazardous. Today's rule fulfills this mandate, in part, by promulgating the final listing for four UDMH production wastes. EPA also plans to decide, within the next several years, whether to list as hazardous wastes generated during a different UDMH manufacturing process, namely that used by the Olin corporation. After EPA has (1) made that final decision, and (2) taken final action on today's proposal to list as hazardous two additional wastes generated during the manufacture of UDMH from carboxylic acid hydrazides, the Agency will have fulfilled its mandate under section 3001(e) of RCRA.

III. Summary of the Final Regulation

This regulation designates as RCRA hazardous wastes the following wastes generated during the manufacture of UDMH from carboxylic acid hydrazides:

- K107—Column bottoms from product separation from the production of 1,1-dimethylhydrazine (UDMH) from carboxylic acid hydrazines
- K108—Condensed column overheads from product separation and condensed reactor vent gases from the production of 1,1-dimethylhydrazine (UDMH) from carboxylic acid hydrazines
- K109—Spent filter cartridges from product purification from the production of 1,1-dimethylhydrazine (UDMH) from carboxylic acid hydrazines
- K110—Condensed column overheads from intermediate separation from the production of 1,1-dimethylhydrazine (UDMH) from carboxylic acid hydrazines.

The hazardous constituent of concern in these wastes is UDMH. UDMH is carcinogenic, mutagenic, and teratogenic. UDMH is typically present in each waste at significant levels (*i.e.*, these wastes contain up to 50 percent UDMH). In addition, UDMH is mobile and persistent, and can reach environmental receptors in harmful concentrations if these wastes are mismanaged.

In addition to its toxicity, the flash point of the condensed column overheads from product separation and condensed vent gases from the reactors (EPA Waste No. K108) has been measured to be between 11 to 14 °C (52 to 55 °F), which makes this waste ignitable according to the criteria in 40 CFR 261.21(a)(1). Also, the pH of the column bottoms from product separation (EPA Waste No. K107) has been measured to be between 13 and 14, which makes this waste corrosive according to the criteria in 40 CFR 261.22(a)(1).

EPA has evaluated these wastes against the criteria for listing hazardous wastes (40 CFR 261.11(a)), and has determined that they typically contain high concentrations of the constituent of concern (UDMH), that this toxicant is mobile and persistent in the environment, and that the toxicant in the wastes is regulated by other EPA regulations, as well as by regulations of other government agencies. In addition, one of the wastes is corrosive, and another is ignitable, and thus these wastes are also being listed as hazardous based on these characteristics. The Agency, therefore, believes that these wastes are capable of posing a substantial present or potential threat to human health or the environment when improperly treated, stored, transported, disposed of, or otherwise managed, and thus are hazardous wastes. (Additional information on the hazards and the toxic constituents of these wastes may be found in the listing background document and the Health and Environmental Effects Profiles, available as described in the "**ADDRESSES**" section.)

The Agency received comments on the proposed listings from the generator of the wastes (Uniroyal Corporation) as well as another manufacturer of UDMH that uses a different process not subject to these listings. Uniroyal also submitted comments on the new data on UDMH made available on August 17, 1989. We have evaluated these comments carefully, and have modified the supporting documentation accordingly. This notice makes final the regulations proposed on December 20, 1984, and provides EPA's response to the comments received.

The manufacturer of UDMH from carboxylic acid hydrazides, Uniroyal Corporation, also supplied the Agency with information on the generation of two additional wastes from the manufacture of UDMH as part of their comments—namely (1) flush water from the catalyst removal system, and (2) spent catalyst and filter media. As a result, the Agency is proposing to add these two wastes to the list of hazardous wastes in 40 CFR 261.32 in a document published elsewhere in today's **Federal Register**.

IV. Response to Comments

EPA received comments on several aspects of the proposed regulations (and on the use of the data made available for public comment on August 17, 1989) from the generator of these wastes, Uniroyal Corporation; the Agency also received comments on the proposed regulations from another manufacturer of UDMH that uses a different process not subject to these listings, Olin Corporation. The Agency has evaluated these comments carefully, and has modified the supporting documentation to this regulation accordingly, as well as proposing new hazardous waste listings based on these comments. This section presents the comments received, as well as the Agency's response.

A. Concentration Level Criteria for Listing Waste as Hazardous

One commenter requested that the Agency's listing of UDMH include a "delisting threshold" so that industry would have criteria for determining whether a waste containing UDMH (or any other toxicant) is considered hazardous, and could use this as a basis for a petition pursuant to 40 CFR 260.22 to exclude a particular UDMH manufacturing waste from the list of hazardous waste, the "delisting" process.

When evaluating delisting petitions, the Agency considers a number of factors, including the presence of any additional toxicants other than those for which the waste was listed and the behavior of the toxicants in the environment. See 40 CFR 260.22(a). Therefore, the delisting process is more complex than a simple evaluation of the concentration of the toxicant(s) for which the relevant waste was listed. The Agency has described its general approach to evaluating delisting petitions in the **Federal Register**. See 50 FR 48886, November 27, 1985. In that notice and in many subsequent proposed and final delisting determinations, the Agency described its evaluation process in detail and explained how it uses information provided by the petitioner (e.g., see 54 FR 14101, April 7, 1989). For the reasons described in those notices and above, the Agency is not including a concentration level of UDMH in the wastes below which the wastes would not be considered hazardous.

B. Assessment of Risk for UDMH in the Wastes

Uniroyal challenged the Agency's evaluation of the carcinogenicity of UDMH for several reasons. In response to the December 20, 1984 proposed

UDMH listings (49 FR 49556), Uniroyal contended that a study by Toth,[1] which was used by EPA to conclude that UDMH should be considered a probable human carcinogen (a B2 carcinogen using EPA's weight-of-evidence classification system), was so flawed as to be invalid for any risk assessment. Uniroyal also challenged the validity of EPA's conclusions on the carcinogenicity of UDMH based on the interim results of new studies currently being conducted by Uniroyal. These new studies were conducted by Uniroyal pursuant to requirements under the Federal Insecticide, Fungicide, and Rodenticide Act (FIFRA) (U.S.C. part 136 *et. seq.*), and were proposed to be used as a partial basis for the UDMH listing regulations under RCRA on August 17, 1989 (54 FR 22942).

The response to challenges by Uniroyal on the use of either the earlier Toth study or the new interim results of the studies conducted by Uniroyal are provided below.

1. Use of the Toth Study to Establish Carcinogenic Risk of UDMH

Uniroyal stated that EPA based its risk assessment of the carcinogenicity of UDMH solely on a study by Toth.[2] Uniroyal contended that this study deviated from scientifically valid protocols, thus invalidating the use of the study for establishing the carcinogenic risk of UDMH to humans.

The specific areas where Uniroyal claimed that the Toth study was not in conformance with EPA Guidelines for oncogenicity studies,[3] and the Agency's specific responses to these comments are given below. In general, however, while noting that there are certain deficiencies in the methodological conduct of the Toth study, the Agency's Human Health Assessment Group (HHAG) (formerly the Carcinogen Assessment Group (CAG)) made a final determination in 1988 that the Toth study may be used as the basis for a carcinogenicity determination for UDMH.[4] This determination was made after evaluating the results of an audit performed on the Toth study by the Agency in 1985.[5] The CAG noted that although the study had certain deficiencies, the increases in the tumor incidence was striking and that the evidence from the Toth study was more than adequate to classify UDMH as a carcinogen in animal test systems, and as a B2 category carcinogen (a probable human carcinogen) using EPA's weight-of-evidence system.

The Agency notes that even if the Toth study were as flawed as Uniroyal alleges, subsequent results of new studies also confirm the Agency's determination that UDMH is carcinogenic. These studies, conducted by Uniroyal as part of the requirements of the Registration Process under FIFRA, were noticed for public comment on August 17, 1989 for their potential use to support these UDMH listing regulations under RCRA (54 FR 33942). The results of this new interim study are also discussed in this Response to Comments section.

a. Uniroyal asserted that one deficiency in the Toth study was that there were no concurrent controls (animals maintained under the same test conditions, but not administered UDMH, which provide a reference point for comparison of any statistical increase in tumors) for any particular animals. The control group that Dr. Toth described in his publication actually lived over a different time span than those animals which were administered UDMH, and thus could not be assured to have lived under the exact same laboratory conditions as the animals which were administered UDMH.

Response: As a result of an audit of the Toth study performed by the Agency,[6] data was located to establish the existence of as well as records for concurrent controls that were maintained by Dr. Toth's laboratory during the UDMH bioassay. These concurrent controls were found to have essentially the same tumor incidence as in the non-concurrent control group reported upon by Dr. Toth in his original publication of his study. Thus, the Agency does not believe there are problems in utilizing the Toth study because of Uniroyal's allegations concerning lack of concurrent control animals.

b. Uniroyal stated that only one dose level of UDMH was tested, and this dose level exceeded the Maximum Tolerated Dose (MTD). The MTD is an administered level of substance that significantly shortens the life span of test animals, due to toxicological effects of the test substance (such as suppression of the immune system, endocrine disturbances, and organ damage). Thus, an exceedance of the MTD could interfere with any assessment of the carcinogenic effects of an administered substance. Uniroyal contended that any observed carcinogenicity findings in the Toth study were therefore likely to have been caused by metabolic overload and/or cytotoxicity (exceedance of the MTD), and not due to a genuine carcinogenic response to UDMH. Uniroyal pointed out that after 15 months, there were only 26 percent survivors among the treated mice instead of the allegedly required 50 percent. The company also stated that there were no survivors at the end of 18 months, although it alleged that the Guidelines require a survival rate of 25 percent, thus allegedly providing further evidence that the dose was in excess of the MTD.

Response: First, according to the EPA Guidelines for Carcinogenic Risk Assessment, only one dose is required to determine qualitatively the carcinogenicity of an agent if the results are positive and if the MTD has not been exceeded.[7] Even if the MTD has been exceeded, the study is not necessarily invalidated, but instead must be evaluated closely to determine if concomitant pathology and/or metabolic overload have influenced results.[8] Second, contrary to Uniroyal's suggestion, there is nothing in the Guidelines for Carcinogenic Risk Assessment,[9] the uniform procedures

[1] Toth, B. (1973) 1,1-Dimethylhydrazine (Unsymmetrical) Carcinogenesis in Mice. Light Microscopic and Ultrastructural Studies on Neoplastic Blood Vessels. *J. Natl. Cancer Inst.*, 50:181.

[2] Toth, B. (1973), *ibid.*

[3] Pesticide Assessment Guidelines, Subdivision F, 1982.

[4] U.S.EPA, CAG (June, 1988) Evaluation of the Potential Carcinogenicity of 1,1-Dimethylhydrazine (57-14-7), in Support of Reportable Quantity Adjustments Pursuant to CERCLA section 102 (OHEA-C-073-95, June 1988, Final); W. Pepelko through Wm. Farland, Director, CAG, to E. Claussen, Director, Characterization and Assessment Division, OSW (January 9, 1987) Evidence for Carcinogenicity of 1,1-Dimethylhydrazine (DMZ). (Both documents are in the docket for this final rule, available as indicated in the **ADDRESSES** section.)

[5] U.S. EPA, OPP (April 22, 1985) Report of the Audits of the Studies on the Carcinogenic Potential of Succinic Acid 2,2-Dimethylhydrazide (Daminozide) and 1,1-Dimethylhydrazine in Swiss Mice, Studies Conducted at the Eppley Institute, the University of Nebraska Medical Center, Omaha, Nebraska.

[6] U.S. EPA, OPP (April 22, 1985), *ibid.*

[7] U.S. EPA (September 24, 1986) Guidelines for Carcinogenic Risk Assessment, EPA Publication No. EPA/600/8-87/045). These guidelines were published in the **Federal Register** on September 24, 1986 (51 FR 33992), and were products of a two-year Agency development and review process, where drafts were peer-reviewed by experts from academia, industry, public interest groups, and other governmental agencies. Proposed guidelines were published in the **Federal Register** (49 FR 46294, November 23, 1984), reviewed by special panels of EPA's Science Advisory Board, and revised to take into account public and SAB comments, as well as being reviewed by the Office of Management and Budget.

[8] U.S. EPA (September 24, 1986) Guidelines for Carcinogenic Risk Assessment, *ibid.*

[9] U.S. EPA (September 24, 1986) Guidelines for Carcinogenic Risk Assessment, *ibid.*

that EPA uses to evaluate the effects of toxicants, that require any minimal survival rate at different stages of a bioassay.

In addition, survival rates in the Toth study did not demonstrate that the MTD was exceeded. Among male mice, the survival rate was lower than in the untreated animals, but only after more than 50 weeks of exposure. Since 84 percent of the animals in this group developed vascular tumors and 78 percent lung tumors, with average latencies of 42 and 53 weeks, respectively, it is highly likely that cancer induction itself was responsible for mortality after 50 weeks. Among male hamsters, in which the latency for tumor development was longer with fewer incidences, the survival rate was the same for treated and control animals. If adjustments are made for very early mortality in female hamsters, then the long term survival rate was also equivalent in treated animals and controls.

Excessive noncancer liver pathology was not reported in the Toth study, nor was it found by the EPA audit of this study, as would be expected if the MTD were exceeded.[10] Based upon the mortality results and lack of reported pathology, there is little direct evidence that the MTD was exceeded.

c. Uniroyal challenged the validity of the Toth study because complete necropsy records were not maintained, and portions of the study were conducted by technicians in the absence of direct supervision.

Response: The audit performed by EPA considered in detail this problem with the Toth study, noting that there was a large turnover of technicians, and that none of the observations, calculations or other records for the necropsy histopathology report sheets were dated, signed, or initialled. Despite these deficiencies noted by the auditors, the CAG [11] concluded that the Toth study was still adequate for a risk assessment, since no evidence was found to suggest that errors were made by the technicians under these conditions.

d. Uniroyal contended that animal randomization was inadequate to prevent in-breeding (a condition that could lead to heightened sensitivity to carcinogens as a result of genetic drift).

Response: According to the EPA Guidelines,[12] humans are assumed to be as sensitive to the agent as the most sensitive strains of animal species, unless there is knowledge otherwise. As a result, this allegedly possible change in sensitivity of the colony of mice maintained by Dr. Toth's laboratory would not alter the weight-of-evidence determination for UDMH.

Furthermore, there is no evidence from pathological data on the control animals evaluated in Dr. Toth's laboratory to suggest that any genetically enhanced susceptibility to spontaneous carcinogenesis (carcinogenesis that occurs without the intentional administration of a test substance) has occurred due to genetic drift. If there was such heightened sensitivity, then increased spontaneous carcinogenesis in the control animals would be expected to accompany any genetically enhanced susceptibility to exogenously induced carcinogenesis (carcinogenesis that occurs as the result of the administration of a test substance). The EPA audit of the Toth study did not reveal any increased rate of spontaneous carcinogenesis in the control animals maintained by Dr. Toth's laboratory compared to animals of the same species maintained by other laboratories and the supplier. This fact discredits Uniroyal's theory of in-breeding leading to enhanced susceptibility to carcinogenesis to exogenous carcinogens.

In addition, the rate of spontaneous carcinogenesis was seen to be identical for the control groups maintained by Dr. Toth's laboratory two years prior to the UDMH bioassay as at the same time as the UDMH bioassay. This further supports the conclusion that there was no genetic drift over time due to in-breeding or other factors in the animals tested.

Furthermore, the Swiss albino strain of mice used in the Toth study are highly susceptible to carcinogenesis. This facilitates the development of tumors over the short life span of this rodent species. As a result, any genetic drift that would occur in these mice is likely to lead to decreased sensitivity, not the other way around. Thus, the results of the Toth study are not compromised by any alleged enhanced sensitivity of the animals to carcinogens.

e. Uniroyal contended that another deficiency in the Toth study was a lack of suitable analytical verification of the test material during the study.

Response: The EPA auditors recognized that the overall analytical verification of the study did not conform to today's General Laboratory Practice standards,[13] but concluded that despite the deficiencies, there was no reason to doubt that the mice received the test substances (UDMH and Alar®) at the indicated dosage levels. The EPA auditors found, however, that the UDMH purchased from Aldrich Chemical Company had been analyzed for chemical composition by Aldrich. In addition, the auditors found that the UDMH mixed with water in known proportions were in fact analyzed for chemical composition, and that these were the mixtures that were administered to the animals in the Toth study.

The EPA auditors as well as CAG concluded that despite the uncertainties with the analytical method, there was no evidence to suggest that the UDMH/water solutions did not contain the concentrations reported in the study. This is because even in the absence of analytical verification, laboratory methods for making solutions of known concentrations by the addition of accurately measured portions of a substance (UDMH in this instance) have historically been found to be capable of great accuracy, in the absence of any decomposition or other losses of the substance from the water. Any deterioration of the UDMH/water solutions, through hydrolysis or volatilization of the UDMH, would have resulted in decreased cancer rates, not the other way around.

In addition, even if the analysis of the UDMH obtained from Aldrich Chemical Company, the supplier, were inaccurate, as impliedly alleged by Uniroyal, it was known that Aldrich itself had analyzed the UDMH for purity. There is no evidence that the UDMH contained any toxic contaminants, or that any toxic contaminants were present in sufficient concentration or of sufficient potency to have confounded the observations of the carcinogenic effects of UDMH.

f. Uniroyal contended that even if the Toth study were valid, then the estimated risk from UDMH exposure was lower than the value derived by EPA, based on that study. The q_1^* (carcinogenic potency) value of 8.66 $(mg/kg/day)^{-1}$ was calculated using an observed carcinogenic response of 42 out of 50 mice by EPA. Uniroyal claimed, however, that only 25 of 48 mice were diagnosed as having blood vessel tumors, basing this contention on an audit performed for Uniroyal.[14]

[10] U.S. EPA (September 24, 1986) Guidelines for Carcinogenic Risk Assessment, *ibid.*

[11] U.S. EPA, CAG (January 7, 1987), *ibid.*

[12] U.S. EPA (September 24, 1986), *ibid.*

[13] U.S. EPA, OPP (April 22, 1985), *ibid.*

[14] Vesselinovitch, S.D., Report to Uniroyal, Inc. (1984).

Response: EPA's audit [15] of the Toth study confirmed the tumor incidence found by Dr. Toth. In addition, CAG [16] has concluded that since the control animals lived longer (not suffering the acute toxic effects from UDMH that resulted in premature death, thus presumably having more time to develop tumors) the potency of UDMH as a carcinogen may even be underestimated using data from the Toth study. Moreover, even if the incidence of tumors was the lower rate contended by Uniroyal, that rate is still highly significant and would not alter the determination that UDMH is a category B2 carcinogenic.

g. Uniroyal expressed the position that EPA cannot list the UDMH manufacturing wastes as hazardous until the scientific validity of the carcinogenicity study conducted by Toth was ascertained or repeated. Uniroyal noted that EPA itself was currently conducting an audit of the Toth study as a result of comments on the study submitted by Uniroyal regarding proposed regulations under FIFRA, and suggested that EPA should take the results of this audit into account.

Response: The results of the EPA audit [17] referred to by Uniroyal became available after Uniroyal submitted its comments on the proposed UDMH listings. As discussed earlier, this audit, although acknowledging certain deficiencies in the Toth study, noted that the increases in the tumor incidences were so striking that even if the controls had been dropped from the study, it would not weaken the findings of the study in any regard. The audit team found that data obtained from missing pathology slides that were subsequently located further substantiated the tumor incidences stated in the publication by Dr. Toth. Thus, this audit does not provide any support for Uniroyal's position that the Toth study is invalid for performing a carcinogenic risk assessment.

2. Use of the Interim Results of Studies on UDMH Carcinogenicity Currently Being Conducted by Uniroyal

As part of its review of the pesticide manufactured from UDMH, Daminozide (Alar®), under the Re-registration Process under FIFRA, EPA required Uniroyal Corporation to conduct additional studies on the health effects of both UDMH AND Daminozide. Based on the interim results of the data submitted by Uniroyal, EPA proposed to cancel certain pesticide product registrations under FIFRA.[18]

On August 17, 1989, EPA announced its intent to use this new interim data developed by Uniroyal as part of the basis for listing wastes from the manufacture of UDMH as hazardous under RCRA,[19] since EPA believed that this data provided strong evidence that UDMH is a carcinogen. Uniroyal responded to the August 17, 1989 Notice of Data Availability with the following contentions that the data did not support a determination that UDMH was a probable human carcinogen. The specific challenges to the significance of these data for a carcinogenicity determination are given below.

a. Uniroyal claimed that the biological significance of the interim results of the UDMH and Daminozide study are questionable. For example, while positive tumorigenic results were seen in mice, no significant increases in tumor incidences were detected in any of the exposed groups of rats.

Response: The lack of detectable effects in rats cannot be construed as evidence for noncarcinogenicity. Only an extremely potent carcinogen would be expected to induce an increase in tumor incidence as early as 12 months from the start of exposure. In fact, the positive results seen in mice as early as 8 months, suggest that UDMH is not only a carcinogen, but a rather potent one. Furthermore, it is generally recognized that species may differ in sensitivity to an applied dose, so the interim results with rats is not inconsistent with this expectation.

b. Uniroyal argued that there was no increase in the number and severity of liver islands, as would be expected if an agent was a carcinogen.

Response: The liver is made up of liver cells called hepatocytes. In the liver island assay most of the liver is removed to stimulate rapid cell division among the remaining hepatocytes. Subsequent administration of a potentially carcinogenic agent may induce genetic changes resulting in the gain or loss of specific enzyme systems in the hepatocytes. Since the cells are rapidly dividing, one enzymatically altered cell will reproduce to form an "island" of similar cells. These islands can be made visible by differential staining techniques. The assay is regarded as a test for probable carcinogenicity since the enzymatic changes are considered by many investigators to be early steps in the progression of cellular changes leading to cancer.

The tumors resulting from exposure to UDMH, however, occur in blood vessels, a different type of tissue than located in the liver. Thus, the lack of any increase or severity of the liver islands does not negate the carcinogenicity determination.

c. Uniroyal argued that since positive results were seen in mice only at 40 and 80 ppm, dosages that Uniroyal claims are clearly in excess of the maximum tolerated dose (MTD), any conclusions on the carcinogenicity of UDMH based on results from tests which exceeded the MTD are not valid.

Response: According to established Guidelines [20] using body weight gains, survival, etc., EPA believes that the MTD was not exceeded. Mortality that did occur during the first 12 months of exposure was considered by the EPA reviewers [21] to more likely be the result of cancer rather than liver necrosis. Since tumor increases were detected in intermediate dosed males as well as in females, in which the pathological effects and other toxic signs were minimal, the results are not considered to be invalidated by the alleged overdosage.

Even if the MTD was exceeded, the data can be used in assessing carcinogenicity according to EPA's risk assessment Guidelines, if the results are carefully reviewed to ensure that responses are not due to factors operating only at levels above MTD.[22] These include effects such as metabolic activation at high concentrations and hormonal changes. There is little information to indicate that UDMH requires this type of activation, however, which would call into question the possibility that the observed effects were due to an exceedance of the MTD. In addition, there is also no data to indicate that important hormonal changes are taking place, another effect that could be caused if the MTD were exceeded.

The pathological changes in the liver would be of serious concern in evaluating whether the MTD had been exceeded if the liver itself was the primary target organ for the carcinogenic effects of UDMH. The possible genetic alterations with increased cell turnover rates resulting from the pathological changes could lead to tumor induction in some cases.

[15] U.S. EPA, OPP (April 22, 1985), *ibid.*

[16] U.S. EPA, CAG (January 7, 1987), *ibid.*

[17] U.S. EPA, OPP (April 22, 1985), *ibid.*

[18] 54 FR 22558, May 24, 1989.

[19] 54 FR 33942.

[20] U.S. EPA (September 24, 1986), *ibid.*

[21] U.S. EPA, OPP (May 15, 1989), Second Peer Review of Daminozide (Alar) and UDMH (Unsymmetrical 1,1-dimethylhydrazine).

[22] U.S. EPA (September 24, 1986), *ibid.*, pp. 1–5

UDMH, however induces tumors in blood vessels and not in the liver itself. As a result, the changes in the liver do not confound the observations of carcinogenic effects in other organs, the blood vessels.

Thus, EPA does not believe that the MTD was exceeded in the recent Uniroyal studies. Secondly, even if the MTD has been exceeded, EPA's careful review of the data has ascertained that the carcinogenic effects were independent of any physiological changes which could have been caused by an exceedance of the MTD. The results, therefore, still may be used to determine that UDMH is a carcinogen.

d. Uniroyal claimed that the carcinogenic effects were accompanied by a variety of hematological, liver enzyme and liver pathology changes that may well have been responsible for the tumor induction. Thus, the commenter contended that the tumors should not be considered to be the result of a carcinogenic effect of UDMH.

Response: The hematological, liver enzyme, and liver pathology changes are considered by EPA to be a result of tumor growth, and thus not responsible for their induction. In other words, these changes in the liver and blood are considered to be the result of the carcinogenic effects of UDMH, and not due to any direct action of UDMH by a toxicological mechanism unrelated to carcinogenesis. In addition, it should be noted that tumors were induced in females in which alterations of liver enzyme activity and hematological parameters were minimal. Finally, increased tumor incidences were also seen in the lungs, an organ showing few indications of pathological changes. Thus, the Agency does not agree that the observation of hematological and liver changes negates a conclusion that UDMH should be considered a causative agent for carcinogenesis.

e. In general, Uniroyal contended that the weight-of-evidence from the interim results of the studies on UDMH carcinogenicity did not support a determination that UDMH should be classified as a category "B2" carcinogen, a "probable human carcinogen."

Response: Given that significant increases in tumor incidences were seen at more than one site, in both sexes of mice, and to occur very early, and because the responses occurred in the lungs even at lower, relatively non-toxic doses, the newer, interim data is considered by the Agency to be consistent with the earlier data regarding the carcinogenicity of UDMH.

According to EPA's Guidelines for cancer risk assessment, a chemical is classified into category B2 when there is sufficient evidence for carcinogenicity in animals, but insufficient data in humans. Sufficient evidence for carcinogenicity in animals occurs when there is an increased incidence of malignant or combined benign and malignant tumors (a) in multiple strains or species (b) in multiple experiments (e.g., with different dose levels) or (c) to an unusual degree in a single experiment. The interim results of the studies satisfy both categories "a" and "c" in that significant tumor increases occurred in both mice and hamsters and the response occurred to an unusual degree, e.g., 84 percent incidence of hemangiosarcomas in male mice. Thus, since human data is inadequate, while animal data is sufficient, UDMH is still considered to fit the classification weight-of-evidence category B2.

f. Uniroyal claimed that the interim data were also inadequate to establish a quantitative, or dose-response, risk estimate for UDMH.

Response: The Agency need not develop quantitative weight-of-evidence for a potential carcinogen as a necessary basis for a determination that a toxicant of concern or wastes containing that toxicant should be regulated as hazardous under RCRA. The available study on UDMH does indicate that it is a potent carcinogen. The final studies on UDMH carcinogenicity to be submitted to EPA in the future are not likely to alter this evaluation.

g. Uniroyal also claimed that the results from the interim studies being conducted by Uniroyal demonstrated that UDMH was not mutagenic.

Response: A total of 5 mutagenicity studies were submitted by Uniroyal to EPA during 1989 as part of the interim results on UDMH oncogenicity. The following three tests were considered to be negative and acceptable: (1) The Ames Salmonella test, (2) unscheduled DNA synthesis, and (3) primary rat hepatocyte and CHO/aberration. The use of an unusual solvent (0.25 Normal hydrochloric acid) in these tests, however, limits the use of the results of these tests to predict mutagenesis that may occur under more usual test conditions.

Two CHO/hprt gene mutation assays have also been submitted by Uniroyal, one using the hydrochloric acid solvent. In the second, an attempt was made to buffer the solution. In these latter two studies there were enough instances of elevated frequencies to suggest that there may be mutagenic activity. Taken as a whole, therefore, the results must be considered to be equivocal, rather than negative.

The interim results of the mutagenicity studies being conducted by Uniroyal also do not call into question the validity of the earlier UDMH tests that were positive for mutagenicity, since the conditions used by Uniroyal differed from those in earlier tests. The positive results of earlier mutagenicity studies are discussed in the background documentation for this final rule as well as in the May, 1988 technical support document developed by EPA as part of the FIFRA reregistration review of Alar.[23]

In summary, after carefully evaluating the comments, the Agency believes that the available evidence supports a determination that UDMH is carcinogenic, mutagenic, and teratogenic.

C. Additional Waste Streams

The commenter, the generator of the four wastes covered by today's rulemaking, supplied information on the generation of two additional wastestreams, both having the potential for significant UDMH contamination. As a result of this new information, the Agency, in an accompanying action in today's **Federal Register**, is proposing to add two additional waste streams from the manufacture of UDMH from carboxylic acid hydrazides to the list of hazardous wastes.

V. Relation to Other Regulations

A. Toxicity Characteristics (TC)

As one of the mandates of HSWA, the Agency expanded the toxicity characteristics (TC) by including additional toxic organic chemicals. Under the March 29, 1990 final rule (55 FR 11796), hazardous waste listings will not be affected by the toxicity characteristic—that is, all the listings will remain in effect, including those listings that were based on the presence of TC constituents. It is EPA's intention that the hazardous waste listings will continue to complement the TC. Although the TC currently does not include UDMH as a toxicity characteristic contaminant, any future addition of UDMH to the TC may capture other wastes contaminated by UDMH that are not covered by wastes K107, K108, K109 and K11O. In addition, the recently promulgated TC may capture other wastes generated by the UDMH manufacturing industry that contain the current toxicity characteristic contaminants that are not covered by wastes K107, K108, K109 and K110.

---

[23] U.S. EPA, OPP (May, 1989), *ibid.*

B. Land Disposal Restrictions

HSWA mandated that EPA promulgate under a specific schedule land disposal restrictions for all wastes listed or identified as hazardous prior to the enactment of HSWA (see RCRA section 3004(g)(4)(C)). HSWA also requires the Agency to make a land disposal prohibition determination for any hazardous waste that is newly identified or listed after November 8, 1984, within six months of the date of identification or listing (RCRA section 3004(g)(4), 42 U.S.C. 6924(g)(4)). However, the statute does not provide for an automatic prohibition of the land disposal of such wastes if EPA fails to meet this deadline. The Agency is evaluating treatment standards for newly listed wastes K107, K108, K109, and K110.

VI. Test Methods to Be Added to Appendix III

Appendix III of 40 CFR part 261 is a list of test methods that are approved for use in demonstrating that the constituents of concern in listed wastes are not present at concentrations of concern. The Agency is designating Method 8250 for testing for UDMH, and is adding this method to Appendix III of part 261. The proposed regulation proposed the use of Method 8250 for testing for UDMH in the wastes (49 FR 49556); no comments were received regarding the use of this method for this purpose. Method 8270 is also believed to be a suitable method since most commercial laboratories now prefer to use the capillary column chromatography specified in this method to improve the chromatographic resolution. The only difference between these two methods is the use of a capillary column gas chromatography technique instead of a packed column technique.

Persons wishing to submit delisting petitions must use one of these methods (or an equivalent one) to demonstrate the concentration of UDMH in their wastes.[24] (See 40 CFR 260.22(d)(1).) As part of their petitions, EPA requests submission of quality control data demonstrating that the methods they have used yield acceptable recovery (*i.e.*, >80% recovery at concentrations above 1 μg/g) on spiked aliquots of their waste.

The above methods are in "Test Methods for Evaluating Solid Waste: Physical/Chemical Methods," SW–846, 3rd Ed., as updated, available from: Superintendent of Documents, Government Printing Office, Washington, DC 20402, (202) 783–3238, Document Number: 055–002–81001–2.

VII. CERCLA Impacts

All listed hazardous wastes, as well as any solid waste that exhibits one or more of the characteristics of a hazardous waste (as defined in 40 CFR 261.21 through 261.24), are hazardous substances under section 101(14)(C) of the Comprehensive Environmental Response, Compensation, and Liability Act of 1980, as amended (CERCLA). (CERCLA hazardous substances are listed in Table 302.4 at 40 CFR 302.4, along with their reportable quantities (RQs).) CERCLA section 103(a) requires that persons in charge of vessels or facilities from which a hazardous substance has been released in a quantity that is equal to or greater than its RQ immediately notify the National Response Center of the release [at (800) 424–8802 or in the Washington, DC metropolitan area at (202) 426–2675]. In addition, section 304 of the Superfund Amendments and Reauthorization Act of 1986 (SARA) requires the owner or operator of a facility to report the release of a hazardous substance to the appropriate state emergency response commission (SERC) and to the local emergency planning committee (LEPC) when the amount released equals or exceeds the RQ for the substance.

According to the "mixture rule" used for notification under CERCLA and SARA (50 FR 13463, April 4, 1985), the release of mixtures must be reported when the amount released equals or exceeds the RQ for the waste, unless the concentrations of the constituents of the waste are known. When the concentrations of the individual constituents of a hazardous waste are known, the release of the hazardous waste would need to be reported to the NRC and to the appropriate LEPC and SERC when the RQ of any of the hazardous constituents is equaled or exceeded. RQs of different hazardous substances are not additive under the mixture rule (except for radionuclides, see 54 FR 22536, May 24, 1989), so that spilling a mixture containing half an RQ of one hazardous substance and half an RQ of another hazardous substance does not require a report.

Under Section 102 of CERCLA, all hazardous wastes newly designated under RCRA will have a statutorily-imposed RQ of one pound unless and until adjusted by regulation under CERCLA. In order to coordinate the RCRA and CERCLA rulemaking with respect to new waste listings, the Agency also proposed on December 20, 1984 regulatory amendments under CERCLA authority in connection with the proposed listings to: (1) Designate wastes K107 to K110 based on the hazardous substances under section 102 of CERCLA; and (2) adjust the RQs of wastes K107 to K110 based on the application of the RQ adjustment methodology under section 102(a) (49 FR 49556).

The RQs for each waste and for each of the hazardous constituents are identified in the table below. The constituent of concern, UDMH, has an RQ that has undergone adjustment since the proposed listing of UDMH production wastes. On August 14, 1989, EPA adjusted the RQ for UDMH from one pound to 10 pounds (54 FR 33426).

The adjustment of the RQs of wastes K107, K108, K109 and K110 from the statutory one-pound level is based on the current RQ of the constituent in these listings. Because the only toxic constituent of concern in the wastes (UDMH) has an RQ of 10 pounds, the RQs of the four wastes likewise are being set today as 10 pounds. These RQs will become effective on the effective date of today's action, when the wastes simultaneously become hazardous substances under CERCLA.

Hazardous substance	Constituent	RQ
Waste No. K107		10 lbs.
	UDMH...	10 lbs.
Waste No. K108		10 lbs.
	UDMH...	10 lbs.
Waste No. K109		10 lbs.
	UDMH...	10 lbs.
Waste No. K110		10 lbs.
	UDMH...	10 lbs.

VIII. State Authority

A. Applicability of Rules in Authorized States

Under section 3006 of RCRA, EPA may authorize qualified States to administer and enforce the RCRA program within the State. (See 40 CFR part 271 for the standards and requirements for authorization.) Following authorization, EPA retains enforcement authority under sections 3007, 3008, 3013, and 7003 of RCRA, although authorized States have primary enforcement responsibility.

Prior to the Hazardous and Solid Waste Amendments of 1984 (HSWA), a State with final authorization administered its hazardous waste program entirely in lieu of EPA administering the Federal program in that State. The Federal requirements no

[24] Petitioners may use other methods to analyze for UDMH if, among other things, they demonstrate the equivalency of these methods by submitting their quality control and assurance information along with their analysis data. (See 40 CFR 260.21.)

longer applied in the authorized State, and EPA could not issue permits for any facilities in the State that the State was authorized to permit. When new, more stringent Federal requirements were promulgated or enacted, the State was obliged to enact equivalent authority within specified time frames. New Federal requirements did not take effect in an authorized State until the State adopted the requirements as State law.

In contrast, under section 3006(g) of RCRA, 42 U.S.C. 6926(g), new requirements and prohibitions imposed by the HSWA take effect in authorized States at the same time that they take effect in nonauthorized States. EPA is directed to implement those requirements and prohibitions in authorized States, including the issuance of permits, until the State is granted authorization to do so. While States must still adopt HSWA-related provisions as State law to retain final authorization, the HSWA applies in authorized States in the interim.

Today's rule is promulgated pursuant to section 3001(e)(2) of RCRA, a provision added by the HSWA. Therefore, these wastes have been added to Table 1 in 40 CFR 271.1(j), which identifies the Federal program requirements that are promulgated pursuant to HSWA, and that take effect in all States, regardless of their authorization status. States may apply for either interim or final authorization for the HSWA provisions identified in Table 1, as discussed in the following section of this preamble. Because EPA promulgated rules regarding the timing for HSWA listings after this rule was proposed, the existing regulatory time frames supersede the discussions in the preamble to the proposed rule.

B. Effect on State Authorizations

As noted above, EPA will implement today's rule in authorized States until they modify their programs to adopt these rules, and the modification is approved by EPA. Because the rule is promulgated pursuant to HSWA, a State submitting a program modification may apply to receive either interim or final authorization under section 3006(g)(2) or 3006(b), respectively, on the basis of regulations that are substantially equivalent or equivalent to EPA's. The procedures and schedule for State program modifications under section 3006(b) are described in 40 CFR 271.21. The same procedures should be followed for section 3006(g)(2).

Section 271.21(e)(2) requires that States that have final authorization must modify their programs to reflect Federal program changes and must subsequently submit the modifications to EPA for approval. State program modifications to conform to today's rule must be made by July 1, 1991, if only regulatory changes are necessary, or by July 1, 1992, if statutory changes are necessary. See 40 CFR 271.21(e)(2)(iv) and 271.21(e)(2)(v). These deadlines can be extended in exceptional cases. See 40 CFR 271.21(e)(3).

States with authorized RCRA programs already may have regulations similar to those in today's rule. These State regulations have not been assessed against the Federal regulations being promulgated today to determine whether they meet the tests for authorization. Thus, a State is not authorized to implement these regulations in lieu of EPA until the State program modification is approved. Of course, States with existing regulations may continue to administer and enforce their regulations as a matter of State law. In implementing the Federal program, EPA will work with States under cooperative agreements to minimize duplication of efforts. In many cases, EPA will be able to defer to the States in their efforts to implement their programs, rather than take separate actions under Federal authority.

States that submit official applications for final authorization less than 12 months after the effective date of these regulations are not required to include standards equivalent to these standards in their applications. However, a State must modify its program by the deadlines set forth in 40 CFR 271.21(e). States that submit official applications for final authorization 12 months after the effective date of these standards must include standards in their application. Section 271.3 sets forth the requirements a State must meet when submitting its final authorization application.

IX. Compliance Dates

A. Notification

Under section 3010 of RCRA, EPA may waive the notification requirement otherwise applicable to persons managing newly-regulated hazardous waste. The Agency has decided to waive the RCRA section 3010 notification requirement for only those persons who generate, transport, treat, store, or dispose of hazardous wastes subject to today's rule that have previously notified EPA or an authorized State of hazardous waste activities and have received an identification number. The Agency believes that most, if not all, persons who manage these wastes have already notified EPA and received an EPA identification number and therefore will not have to re-notify. However, any person who generates, transports, treats, stores, or disposes of these wastes has *not* previously notified and received an identification number, that person must notify EPA or an authorized State no later than July 31, 1990, of these activities pursuant to section 3010 of RCRA. Notification instructions are set forth in 45 FR 12746, February 26, 1980.

B. Permitting

Because HSWA requirements are applicable in authorized States at the same time as in unauthorized States, EPA will regulate K107–K110 until States are authorized to regulate these wastes. Thus, once this regulation becomes effective, EPA will apply Federal regulations to these wastes and to their management in both authorized and unauthorized States. Facilities that treat, store, or dispose of K107–K110, but that have not received a permit pursuant to section 3005 of RCRA and are not operating pursuant to interim status, might be eligible for interim status under HSWA (see section 3005(e)(1)(A)(ii) of RCRA, as amended). In order to operate pursuant to interim status, the eligible facilities are required to possess an EPA ID number pursuant to 40 CFR 270.70(a), and will be required to submit a Part A permit application by November 2, 1990.

Currently permitted facilities that manage UDMH wastes must submit Class I permit modifications if they are to continue managing the newly regulated wastes in units that require a permit. The facilities must obtain the necessary modification by the effective date of the rule, or they will be prohibited from accepting additional UDMH wastes.

Interim status facilities that manage UDMH wastes in units that require a permit must file an amended Part A permit application under 40 CFR 270.10(g) if they are to continue managing newly regulated wastes. The facilities must file the necessary amendments by the effective date of the rule, or they will not receive interim status with respect to the UDMH wastes (i.e., they will be prohibited from accepting additional UDMH wastes until permitted).

Newly regulated facilities (i.e., facilities at which the only hazardous wastes that are managed are newly regulated UDMH wastes) must qualify for interim status by the compliance date of the rule in order to continue managing UDMH wastes prior to receiving a permit. Under 40 CFR 270.70, an existing facility may obtain interim status by getting an EPA identification number and submitting a Part A permit

application by the effective date of this rule. To retain interim status, a newly-regulated land disposal facility must submit a Part B permit application within one year after the effective date of the rule and certify that the facility is in compliance with all applicable ground water monitoring and financial responsibility requirements (see RCRA section 3005(e)(3)).

EPA recently promulgated amendments to the procedures for permit modifications for treatment, storage, and disposal facilities (see 53 FR 37934, September 28, 1988). The following discussion assumes implementation in accordance with the new rule. EPA will implement the UDMH listing regulations by using the new permit modification procedures, consistent with EPA policy (see 53 FR 37933, September 28, 1988).

Under the new regulation in 40 CFR 270.42, there are now three classes of permit modifications with different submittal and public participation requirements for each class. In 40 CFR 270.42(g), which concerns newly listed or identified wastes, a permitted facility that is "in existence" as a hazardous waste facility for the newly listed or identified waste on the effective date of the notice must submit a Class 1 modification by that date. Essentially, this modification is a notification to the Agency that the facility is handling the waste. As part of the procedure, the permittee must also notify the public within 90 days of submittal to the Agency.

Next, within 180 days of the effective date, the permittee must submit a Class 2 or 3 modification to the Agency. A permittee may submit a Class 2 modification if the newly regulated waste will be disposed in existing TSD units and will not require additional or different management practices from those authorized in the permit. A Class 1 modification requires public notice by the facility owner of the modification request, a 60 day public comment period, and an informal meeting between the owner and the public within the 60 day period. The rule includes a "default provision," so that for Class 1 modifications, if the Agency does not make a decision within 120 days, the modification is automatically authorized for 180 days. If the Agency does not reach a decision by the end of that period, the modification is permanently authorized. If the newly regulated waste requires additional or different management practices, a Class 3 modification is required. The initial public notification and public meeting requirements are the same as for Class 2. However, after the end of the public comment period, the Agency will develop a draft permit modification, open a public comment period of 45 days and hold a public hearing.

X. Regulatory Impact Analysis

Under Executive Order 12291, EPA must determine whether a regulation is "major" and, therefore, subject to the requirement of a Regulatory Impact Analysis. The generator subject to today's rule, Uniroyal Corporation, is not currently manufacturing UDMH. As a result, none of the wastes covered by this final regulation are currently being generated, and therefore no costs from their management as hazardous would be incurred at the present time.

However, Uniroyal may resume production; when this occurs the total additional incurred cost for disposal of the wastes as hazardous would be less than $2,000 (based on previous production levels), well under the $100 million constituting a major regulation. This cost would be insignificant and would result from minimal additional compliance requirements, as these wastes were already handled as if they were hazardous.

Since EPA does not expect that the amendments promulgated here will have an annual effect on the economy of $100 million or more, result in a measurable increase in cost or prices, or have an adverse impact on the ability of U.S.-based enterprises to compete in either domestic or foreign markets, these amendments are not considered to constitute a major action. As such, a Regulatory Impact Analysis is not required.

The Agency received comments on the economic impact analysis included with the December 20, 1984 proposed regulations. Uniroyal criticized the Agency's economic analysis because it did not consider the impact of co-disposal of the aqueous wastes with other plant wastes by deep well injection. Uniroyal contended that in the event that the subject hazardous wastes are mixed with other solid wastes, the resulting mixture would be hazardous wastes by the mixture rule (see 40 CFR 261.3(a)(2)(iii)).

Because the commenter ceased underground injection of their UDMH manufacturing wastes in May, 1985 (because of having ceased the production of UDMH itself), long before promulgation of today's rule, the commenter will not be subject to the permitting requirements of parts 144 and 146 for Class 1 wells receiving hazardous wastes (assuming no other hazardous wastes are being injected). As a result, no additional management costs would be incurred by a designation as hazardous wastes formerly disposed in this manner. The commenter would still be required to comply with the parts 144 and 146 requirements for Class 1 wells for the disposal of non-hazardous industrial wastes, however, if the deep well continues to receive other wastes from the facility not regulated as hazardous under RCRA.

XI. Regulatory Flexibility Act

Pursuant to the Regulatory Flexibility Act, 5 U.S.C. sections 601–612, whenever an agency is required to publish a general notice of rulemaking for any proposed or final rule, it must prepare and make available for public comment a regulatory flexibility analysis that describes the impact of the rule on small entities (*i.e.*, small businesses, small organizations, and small governmental jurisdictions). No regulatory flexibility analysis is required, however, if the head of the agency certifies that the rule will not have a significant economic impact on a substantial number of small entities.

The hazardous wastes listed here are not generated by small entities (as defined by the Regulatory Flexibility Act), and the Agency received no comments that small entities will dispose of them in significant quantities. Accordingly, I hereby certify that this regulation will not have a significant economic impact on a substantial number of small entities. This regulation, therefore, does not require a regulatory flexibility analysis.

XII. Paperwork Reduction Act

This rule does not contain any information collection requirements subject to OMB review under the Paperwork Reduction Act of 1980, 44 U.S.C. section 3501 *et seq.*

List of Subjects

40 CFR Part 261

Hazardous waste, Recycling.

40 CFR Part 271

Administrative practice and procedure, Confidential business information, Hazardous materials transportation, Hazardous waste, Indian lands, Intergovernmental relations, Penalties, Reporting and recordkeeping requirements, Water pollution control, Water supply.

40 CFR Part 302

Air pollution control, Chemicals, Hazardous materials, Hazardous materials transportation, Hazardous substances, Intergovernmental relations, Natural resources, Nuclear materials,

Pesticides and pests, Radioactive materials, Reporting and recordkeeping requirements, Superfund, Waste treatment and disposal, Water pollution control.

Dated: April 23, 1990.

William K. Reilly,

Administrator.

For the reasons set out in the preamble, Title 40 of the Code of Federal Regulations is amended as follows:

PART 261—IDENTIFICATION AND LISTING OF HAZARDOUS WASTE

1. The authority citation for part 261 continues to read as follows:

Authority: 42 U.S.C. 6905, 6912(a), 6921, 6922, and 6938.

2. In § 261.32, add the following waste streams to the subgroup 'Organic Chemicals':

* * * * *

§ 261.32 Hazardous wastes from specific sources.

Industry and EPA hazardous waste No.	Hazardous waste	Hazard code
*	*	*
Organic chemicals:		
*	*	*
K107	Column bottoms from product separation from the production of 1,1-dimethyl-hydrazine (UDMH) from carboxylic acid hydrazines.	(C,T)
K108	Condensed column overheads from product separation and condensed reactor vent gases from the production of 1,1-dimethylhydrazine (UDMH) from carboxylic acid hydrazides.	(I,T)
K109	Spent filter cartridges from product purification from the production of 1,1-dimethylhydrazine (UDMH) from carboxylic acid hydrazides.	(T)
K110	Condensed column overheads from intermediate separation from the production of 1,1-dimethylhydrazine (UDMH) from carboxylic acid hydrazides.	(T)
*	*	*

3. Add the following compound and analysis methods in alphabetical order to Table 1 of Appendix III of part 261:

Appendix III—Chemical Analysis Test Methods

* * * * *

TABLE 1.—ANALYSIS METHODS FOR ORGANIC CHEMICALS CONTAINED IN SW-846

* * * * *

Compound	Method No.
*	*
1,1-Dimethylhydrazine (UDMH)	8250
*	*

4. Add the following entries in numerical order to Appendix VII of part 261:

Appendix VII—Basis for Listing Hazardous Waste

EPA hazardous waste No.	Hazardous constituents for which listed
*	*
K107	1,1-Dimethylhydrazine (UDMH).
K108	1,1-Dimethylhydrazine (UDMH).
K109	1,1-Dimethylhydrazine (UDMH).
K110	1,1-Dimethylhydrazine (UDMH).
*	*

PART 271—REQUIREMENTS FOR AUTHORIZATION OF STATE HAZARDOUS WASTE PROGRAMS

5. The authority citation for part 271 continues to read as follows:

Authority: 42 U.S.C. 6905, 6912(a), and 6926.

6. Section 271.1(j) is amended by adding the following entry to Table 1 in chronological order by date of publication:

§ 271.1 Purpose and scope.

* * * * *

(j) * * *

TABLE 1.—REGULATIONS IMPLEMENTING THE HAZARDOUS AND SOLID WASTE AMENDMENTS OF 1984

Promulgation date	Title of regulation	Federal Register reference	Effective date
*	*	*	*
May 1, 1990	Listing Wastes from the Production of UDMH from Carboxylic Acid Hydrazides	[insert Federal Register page numbers].	November 2, 1990.
*	*	*	*

PART 302—DESIGNATION, REPORTABLE QUANTITIES, AND NOTIFICATION

7. The authority citiation for part 302 continues to read as follows:

Authority: Secs. 101(1)(14) and 102(b) of the Comprehensive Environmental Response, Compensation and Liability Act of 1980, 42 U.S.C. 9601(14) and 9602; secs. 311 and 501(a) of the Federal Water Pollution Control Act, 33 U.S.C. 1321 and 1361.

8. Section 302.4 is amended by adding the waste streams K107, K108, K109, and K110 to Table 302.4.

§ 302.4 Designation of hazardous substances.

* * * * *

TABLE 302.4—LIST OF HAZARDOUS SUBSTANCES AND REPORTABLE QUANTITIES

Hazardous substance	CASRN	Regulatory synonyms	Statutory			Final RQ	
			RQ	Code	RCRA waste number	Category	Pounds (kg)
* * * *		*		*		*	
K107			10	4	K107	X	10 (4.54)
Column bottoms from product separation from the production of 1,1-dimethylhydrazine (UDMH) from carboxylic acid hydrazines.							
K108			10	4	K108	X	10 (4.54)
Condensed column overheads from product separation and condensed reactor vent gases from the production of 1,1-dimethylhydrazine (UDMH) from carboxylic acid hydrazides.							
K109			10	4	K109	X	10 (4.54)
Spent filter cartridges from product purification from the production of 1,1-dimethylhydrazine (UDMH) from carboxylic acid hydrazides.							
K110			10	4	K110	X	10 (4.54)
Condensed column overheads from intermediate separation from the production of 1,1-dimethylhydrazine (UDMH) from carboxylic acid hydrazides.							
* * * *		*		*		*	

* * * * * * * *

[1] 4—indicates that the statutory source for designation of this hazardous substance under CERCLA is RCRA section 3001.

* * * * * * *

[FR Doc. 90-9978 Filed 5-1-90; 8:45 am]
BILLING CODE 6560-50-M

ENVIRONMENTAL PROTECTION AGENCY

40 CFR Parts 261, 271, and 302

[SWH-FRL-3719-7]

Hazardous Waste Management System: Identification and Listing of Hazardous Waste and CERCLA Hazardous Substance Designation; Reportable Quantity Adjustment—1,1-Dimethylhydrazine Production Wastes

AGENCY: Environmental Protection Agency.

ACTION: Proposed rule and request for comments.

SUMMARY: The Environmental Protection Agency (EPA) today is proposing to amend the regulations for hazardous waste management under the Resource Conservation and Recovery Act (RCRA) by listing as hazardous two wastes generated during the production of 1,1-dimethylhydrazine (UDMH) from carboxylic acid hydrazides. The effect of this proposed regulation, if promulgated, is that these wastes will be subject to regulation under 40 CFR parts 262–266, and parts 270, 271, and 124.

In addition, the Agency is also proposing amendments to regulation promulgated under the Comprehensive Environmental Response, Compensation, and Liability Act (CERCLA) in 40 CFR part 302 that are related to today's proposed waste listings. In particular, EPA is proposing to designate as CERCLA hazardous substances the wastes proposed for listing under RCRA and would establish the reportable quantities applicable to those wastes.

DATES: EPA will accept public comments on this proposed rule until June 18, 1990. Comments postmarked after this date will be marked "late" and may not be considered.

ADDRESSES: The public must send an original and two copies of their comments to: EPA RCRA Docket Clerk, (OS–332), Room 2427, 401 M Street SW, Washington, DC 20460. Place "Docket number F–90–UDMP–FFFFF" on your comments. Copies of materials relevant to this proposed rulemaking are located in the docket at the address listed above. The public must make an appointment to review docket materials by calling (202) 475–9327. Copies of the non-CBI version of the listing background document, Health and Environmental Effects Profiles, and not readily available references are available for viewing and copying only in the OSW docket.

Comments on the CERLA proposal should be sent in triplicate to: Emergency Response Division, Docket Clerk, Attn: Docket No. RQ, Room 2427, U.S. EPA, 401 M Street SW., Washington, DC 20460.

Copies of materials relevant to the CERCLA portions of this rulemaking are located in Room 2427 at the above address. Both dockets are available for inspection from 9:00 a.m. to 4:00 p.m., Monday through Friday. The public may copy 100 pages from either docket at no charge; additional copies are $0.15 per page.

FOR FURTHER INFORMATION CONTACT: The RCRA/Superfund Hotline, toll-free at (800) 424–9346 or at (202) 382–3000. For technical information on the RCRA hazardous waste listing, contact Dr. Cate Jenkins, Office of Solid Waste (OS–333), Environmental Protection Agency, 401 M Street SW., Washington, DC 20460, (202) 382–4786. For technical information on the CERCLA proposed rule, contact: Ms. Ivette Vega, Response Standards and Criteria Branch, Emergency Response Division (OS–210), U.S. EPA, 401 M Street SW., Washington, DC 20460.

SUPPLEMENTARY INFORMATION: The contents of today's preamble are listed in the following outline:

I. Legal Authority
II. Background
III. Summary of the Proposed Regulation
IV. Relation to Other Regulations
  A. Proposed Toxicity Characteristic
  B. Land Disposal Restrictions
  C. Regulation of UDMH under FIFRA
V. Test Methods for Compounds Added to Appendix VII
VI. CERCLA Designation and Adjustment
VII. State Authority
  A. Applicability of Rules in Authorized States
  B. Effect on State Authorizations
VIII. Compliance Dates
  A. Notification
  B. Permitting
IX. Regulatory Impact Analysis
X. Regulatory Flexibility Act
XI. Paperwork Reduction Act

I. Legal Authority

These proposed regulations would be promulgated under the authority of sections 2002(a) and 3001 (b) and (e)(2) of the Solid Waste Disposal Act, as amended, 42 U.S.C. 6912(a) and 6921(b) and (e)(2) (commonly referred to as RCRA), and section 102(a) of the Comprehensive Environmental Response, Compensation, and Liability Act of 1980, 42 U.S.C. 9602(a).

II. Background

As part of its regulations implementing section 3001 of RCRA, EPA publishes a list of hazardous wastes which includes hazardous wastes generated from specific sources. This list has been amended several times, and is published in 40 CFR 261.32. In today's action, EPA is proposing to amend this section to add two wastes generated during the manufacture of 1,1-dimethyl hydrazine (also known as unsymmetrical dimethylhydrazine, or UDMH) from carboxylic acid hydrazides. These wastes are (1) spent catalyst and filter media, and (2) flush water from the catalyst removal system.

On December 20, 1984, the Agency proposed to list as hazardous four UDMH process wastes (see 49 FR 49556). These four listings are being promulgated as final rules in an accompanying document published elsewhere in today's **Federal Register**. As a result of public comments on those listings, EPA obtained additional data that would support the listing of two additional waste streams from the manufacture of UDMH; as a result, these two wastes are today being proposed to be added to the list of hazardous wastes under 40 CFR 261.32.

The basis for this proposed regulation is a determination by the Agency that these wastes contain significant concentrations of 1,1-dimethylhydrazine (UDMH). UDMH is carcinogenic,[1] mutagenic, and teratogenic. UDMH is typically present in each waste at significant levels. In addition, UDMH is mobile and persistent, and can reach environmental receptors in harmful concentrations if these wastes are mismanaged.

November 8, 1984, the Hazardous and Solid Waste Amendments of 1984 (HSWA) were enacted. These amendments had far reaching ramifications for EPA's hazardous waste regulatory program. Section 3001(e)(2), which was one of the many provisions added by HSWA, directed EPA to make a decision on whether or not to list certain specified wastes, including wastes from the manufacture of UDMH, as hazardous. Today's proposed rule would fulfill this mandate, in part, by listing two additional UDMH production wastes.

[1] On August 17, 1989, the Agency made available for public comment additional data regarding the carcinogenicity of UDMH (see 54 FR 33942). The Agency requested comments on the use of this new data to support the determination that UDMH is a potential human carcinogen. The comments received on the use of this data are responded to in the accompanying **Federal Register** notice which finalizes the hazardous waste listing of four other UDMH manufacturing wastes. EPA determined that these comments on the additional data did not refute the Agency's conclusion that UDMH is carcinogenic.

III. Summary of the Proposed Regulation

This proposed regulation would designate as hazardous the following wastes generated during the manufacture of UDMH from carboxylic acid hydrazides:

- K137—Flush water from catalyst removal system from the production of 1,1-dimethylhydrazine (UDMH) from carboxylic acid hydrazides
- K138—Spent catalyst and filter media from the production of 1,1-dimethylhydrazine (UDMH) from carboxylic acid hydrazides.

Currently, only one manufacturer, Uniroyal Corporation, uses this proprietary process to produce UDMH. At the present time, the generator of these wastes is not manufacturing UDMH, and thus is not generating the wastes. Production of UDMH may resume in the future, however, since UDMH has a number of different uses. (See the Listing Background Document, available in the **ADDRESSES** section of this Notice.) Available information in the Section 3007 RCRA Industry Studies data base indicates that approximately 443 kkg (metric tons) per year of total wastes would be covered by this proposed regulation, assuming previous production levels.

The hazardous constituent of concern in these wastes is UDMH. UDMH is carcinogenic, mutagenic, and teratogenic. UDMH is typically present in each waste at significant levels, as high as 0.01 percent. In addition, UDMH is mobile and persistent, and can reach environmental receptors in harmful concentrations if these wastes are mismanaged.

The Agency's determination that UDMH is carcinogenic is discussed in greater detail in the accompanying **Federal Register** document which finalizes the listing of four other UDMH manufacturing wastes. This determination was based on the Health and Environmental Effects Profile (HEEP) for UDMH,[2] the final determination by the Agency's Carcinogen Assessment Group (CAG, now the Human Health Assessment Group) that UDMH is carcinogenic,[3] and a May 15, 1989 peer reviewed assessment by the Agency of new data that also supports the determination that UDMH is carcinogenic.[4] These assessments are available from the RCRA Docket for this proposed rule (see "**ADDRESSES**" section of this proposal).

The first proposed listed waste (K137) is the flush water from the catalyst removal system from the manufacture of UDMH using carboxylic acid hydrazides. Uniroyal Corporation has supplied information to the Agency indicating that this waste contains up to 0.01% UDMH (trace to 100 parts per million). (More definitive concentration information would need to be submitted by Uniroyal if there is any reason to believe that this waste may not contain environmentally significant UDMH concentrations.) Approximately 437 kkg of this waste are generated annually.

The second proposed listed waste (K138) is the spent catalyst and filter media from the manufacture of UDMH using carboxylic acid hydrazides. Uniroyal Corporation has supplied information indicating that this waste also contains up to 0.01% UDMH (trace to 100 parts per million). (More definitive concentration information would need to be submitted by Uniroyal if there is any reason to believe that this waste may not contain environmentally significant UDMH concentrations.) Approximately 6 kkg of this waste are generated annually; this waste is sent off-site to a catalyst manufacturer to be reclaimed for reuse as catalyst material.

The Agency has made a preliminary estimate that persons face a one per million increased risk of cancer as a result of a lifetime daily dose of 1.15×10^{-7} milligrams UDMH per kilogram body weight, or 8.05×10^{-6} milligrams for a seventy kilogram man (U.S. EPA, 1980–1984). The basis for this estimate is explained further in the Listing Background Document. The corresponding concentration in drinking water ingested over a lifetime resulting in a one-per-million increased risk of cancer is 4.03×10^{-3} milligrams per liter (parts per million), or 4.03×10^{-10} percent. Interim risk levels based on new data submitted to EPA by Uniroyal indicate a similar carcinogenic potency of UDMH.[5]

Thus, the concentrations of UDMH in these wastes are many orders of magnitude greater than the levels related to this human health risk. For example, if the wastes were contaminated with even one part per million of UDMH, then the concentration would approach one million times the level related to human health risks in drinking water.

UDMH is soluble in water in all proportions (miscible) (U.S. EPA, 1980–1984). In addition, UDMH's low octanol-water partition coefficient and complete miscibility with water indicate that UDMH in any waste contacting soil may migrate and contaminate ground water without being absorbed onto the soil matrix. UDMH also has been shown to leach and migrate in experimental soil columns (Braun, 1983). The UDMH in the wastes thus has a high mobility and migratory potential. In addition, under conditions typical of waste mismanagement, UDMH is persistent enough to cause harmful exposures. Only a fraction of the toxicant present in these wastes need migrate and reach environmental receptors to pose the potential for substantial harm.

The primary degradation mechanisms of UDMH in the unsaturated soil zone or aerated surface waters is expected to be oxidation, presumably with dissolved oxygen and free radicals. In the absence of microbial degradation the half-life of UDMH was reported to be 10 to 14 days in ponds and seawaters (Zirrolli, 1983). In anaerobic conditions, such as in ground water, however, UDMH has the potential for persisting for much longer periods. UDMH was found to be extremely stable in distilled water (Braun, 1983).

The potential for aerobic biodegradation of UDMH in water has not been explored thoroughly, but may be minor relative to oxidation under neutral to basic conditions. UDMH oxidation was found to proceed at the same rate in sterile or non-sterile lake water as well as in pure distilled water (Banerjee; 1977, 1981). Under anaerobic conditions, the loss of UDMH with anaerobic bacteria was 26 percent after a six-day bioassay. Biodegradation of UDMH may also be limited by its toxicity; aerobic bacterial degradation was inhibited when UDMH concentrations were as low as 20 parts per million (Kane, 1983).

UDMH could also be released to the atmosphere by evaporation from spills, leaks, and venting during loading, transfer, storage, or treatment. Evaporation of UDMH from water solutions are expected to be significant (MacNaughton, 1975; Stauffer, 1977).

---

[2] U.S. EPA (1984) Health and Environmental Effects Profile for 1,1-Dimethylhydrazine. Prepared by Environmental Criteria and Assessment Office, Cincinnati, OH. Document No. ECAO–CIN–026.

[3] U.S. EPA. CAG (June, 1988) Evaluation of the Potential Carcinogenicity of 1,1-Dimethylhydrazine (57–14–7), in Support of Reportable Quantity Adjustments Pursuant to CERCLA section 102 (OHEA–C–073–95, June 1988, Final).

[4] U.S. EPA, Office of Pesticides and Toxic Substances (May 15, 1989) Second Peer Review of Daminozide (Alar) and UDMH (Unsymmetrical 1,1-dimethylhydrazine).

[5] U.S. EPA, Office of Pesticide Programs (May 1989) Daminozide Special Review Technical Support Document—Preliminary Determination to Cancel the Food Uses of Daminozide. Available from the OPP Docket in support of the May 24, 1989 proposal cancellation of Daminozide (54 FR 22558) as well as the Docket for this proposed rule.

Once volatilized, UDMH may degrade by reaction with hydroxyl radicals (Pitts, 1981), NO_2 or ozone (Tuazon, 1982).

EPA has evaluated these wastes against the criteria for listing hazardous wastes (40 CFR 261.11(a)), and believes that they typically contain high concentrations or have the potential for containing high concentrations of UDMH (the hazardous constituent of concern) and this toxicant is mobile and persistent in the environment in situations similar to waste mismanagement, and may reach environmental receptors in harmful concentrations. The Agency believes, therefore, that these wastes are capable of posing a substantial present or potential threat to human health or the environment when improperly treated, stored, transported, disposed of, or otherwise managed, and thus should be regulated as hazardous wastes.

Additional information on the hazards of these wastes and the toxic constituents of these wastes may be found in the listing background document and other supporting documentation available as described in the "**ADDRESSES**" section.

IV. Relation to Other Regulations

A. Toxicity Characteristics

As one of the mandates of HSWA, the Agency expanded the toxicity characteristics (TC) by including additional toxic organic chemicals. Under the March 29, 1990 final rule (55 FR 11796), hazardous waste listings will not be affected by the toxicity characteristic—that is, all the listings will remain in effect, including those listings that were based on the presence of TC constituents. It is EPA's intention that the hazardous waste listings will continue to complement the TC. Although the TC currently does not include UDMH as a toxicity characteristic contaminant, any future addition of UDMH to the TC may capture other wastes contaminated by UDMH that are not covered by wastes K107, K108, K109 and K110. In addition, the recently promulgated TC may capture other wastes generated by the UDMH manufacturing industry that contain the current toxicity characteristic contaminants that are not covered by wastes K137 and K138, as well as K107, K108, K109, and K11O.

B. Land Disposal Restrictions

HSWA mandated that EPA promulgate under a specific schedule land disposal restrictions for all wastes listed or identified as hazardous prior to the enactment of HSWA (see RCRA 3004(g)(4)(C)). HSWA also requires the Agency to make a land disposal prohibition determination for any hazardous waste that is newly identified or listed after November 8, 1984, within six months of the date of identification or listing (RCRA section 3004(g)(4), 42 U.S.C. 6924(g)(4)). However, the statute does not provide for an automatic prohibition of the land disposal of such wastes if EPA fails to meet this deadline.

V. Test Methods To Be Added to Appendix III

Appendix III of 40 CFR part 261 is a list of test methods that are approved for use in demonstrating that the constituents of concern in listed wastes are not present at concentrations of concern. In an accompanying document published in today's **Federal Register**, the Agency added Method 8250 to Appendix III of part 261 for testing of UDMH in the final rule which listed K107–K110 UDMH manufacturing wastes. The Agency believes that Methods 8250 as well as 8270 would also be appropriate for testing UDMH in the proposed hazardous wastes—K137 and K138—and solicits comments in this regard. The only difference between Method 8270 and 8250 is the fact that Method 8270 uses a capillary column gas chromatography technique instead of the packed column technique specified in Method 8250. Most commercial laboratories now prefer to use capillary column chromatography to improve chromatographic resolution. The Agency is also proposing to add Method 8270 to Appendix III for the four other UDMH manufacturing wastes subject to the final regulation, K107–K110.

Persons wishing to submit delisting petitions would be required to use one of these methods (or an equivalent one) to demonstrate the concentration of UDMH in their wastes.[6] (See 40 CFR 260.22(d)(1).) As part of their petitions, EPA requests submission of quality control data demonstrating that the methods they have used yield acceptable recovery (*i.e.*, >80% recovery at concentrations above 1 μg/g) on spiked aliquots of their waste.

The above methods are in "Test Methods for Evaluating Solid Waste: Physical/Chemical Methods," SW–846, 3rd Ed., as updated, available from: Superintendent of Documents, Government Printing Office, Washington, DC 20402, (202) 783–3238, Document Number: 055–002–81001–2.

[6] Petitioners may use other methods to analyze for UDMH if, among other things, they demonstrate the equivalency of these methods by submitting their quality control and assurance information along with their analysis data. (See 40 CFR 260.21.)

VI. CERCLA Designation and Adjustment

All listed wastes, as well as any solid waste that exhibits one or more of the characteristics of a hazardous waste (as defined in 40 CFR 261.21 through 261.24), become hazardous substances under section 101(14)(C) of the Comprehensive Environmental Response, Compensation, and Liability Act of 1980 (CERCLA). (CERCLA hazardous substances are listed in Table 302.4 at 40 CFR 302.4, along with their reportable quantities (RQs).) CERCLA section 103(a) requires that persons in charge of vessels or facilities from which a hazardous substance has been released in a quantity that is equal to or greater than its RQ immediately notify the National Response Center of the release [at (800) 424–8802 or in the Washington, DC, metropolitan area at (202) 426–2675]. In addition, section 304 of the Superfund Amendments and Reauthorization Act of 1986 (SARA) requires the owners or operator of a facility to report the release of a hazardous substance to the appropriate state emergency response commission (SERC) and to the local emergency planning committee (LEPC) when the amount released equals or exceeds the RQ for the substance.

According to the "mixture rule" used for notification under CERCLA and SARA (50 FR 13463, April 4, 1985), the release of mixtures must be reported when the amount released equals or exceeds the RQ for the waste, unless the concentrations of the constituents of the waste are known. When the concentrations of the individual constituents of a hazardous waste are known, the release of the hazardous waste would need to be reported to the NRC and to the appropriate LEPC and SERC when the RQ of any of the hazardous constituents is equaled or exceeded. RQs of different hazardous substances are not additive under the mixture rule (except for radionuclides, see 54 FR 22536, May 24, 1989), so that spilling a mixture containing half an RQ of one hazardous substance and half an RQ of another hazardous substance does not require a report.

Under section 102 of CERCLA, all hazardous wastes newly designated under RCRA will have a statutorily-imposed RQ of one pound unless and until adjusted by regulation under CERCLA. In order to coordinate the RCRA and CERCLA rulemaking with respect to new waste listings, the Agency today is proposing regulatory amendments under CERCLA authority

in connection with the proposed listing of wastes K137 and K138 to: (1) Designate wastes K137 and K138 as hazardous substances under section 102 of CERCLA; and (2) adjust the RQs of wastes K137 and K138 to 10 pounds, based on the application of the RQ adjustment methodology under section 102(a).

The RQs for each waste and for each of the hazardous constituents are identified in the table below. Because the only constituent of concern, UDMH, has an RQ of 10 pounds (see 54 FR 33426, August 14, 1989), the proposed RQ of both wastes—K137 and K138—is 10 pounds. This RQ will become effective on the effective date of the final rule, when the wastes simultaneously become hazardous substances under CERCLA.

Hazardous substance	Constituent	RQ (pounds)
Waste No. K137		10
	UDMH	10
Waste No. K138		10
	UDMH	10

VII. State Authority

A. Applicability of Rules in Authorized States

Under section 3006 of RCRA, EPA may authorize qualified States to administer and enforce the RCRA program within the State. (See 40 CFR part 271 for the standards and requirements for authorization.) Following authorization, EPA retains enforcement authority under sections 3007, 3008, 3013, and 7003 of RCRA, although authorized States have primary enforcement responsibility.

Prior to the Hazardous and Solid Waste Amendments of 1984 (HSWA), a State with final authorization administered its hazardous waste program entirely in lieu of EPA administering the Federal program in that State. The Federal requirements no longer applied in the authorized State, and EPA could not issue permits for any facilities in the State that the State was authorized to permit. When new, more stringent Federal requirements were promulgated or enacted, the State was obliged to enact equivalent authority within specified time frames. New Federal requirements did not take effect in an authorized State until the State adopted requirements as State law.

In contrast, under section 3006(g) of RCRA, 42 U.S.C. 6926(g), new requirements and prohibitions imposed by the HSWA take effect in authorized States at the same time that they take effect in nonauthorized States. EPA is directed to implement those requirements and prohibitions in authorized States, including the issuance of permits, until the State is granted authorization to do so. While States still must adopt HSWA-related provisions as State law to retain final authorization, the HSWA applies in authorized States in the interim.

Today's rule will be promulgated pursuant to section 3001(e)(2) of RCRA, a provision added by the HSWA. Therefore, the Agency is proposing to add these wastes to Table 1 in 40 CFR 271.1(j), which identifies the Federal program requirements that are promulgated pursuant to the HSWA, and that take effect in all States, regardless of their authorization status. States may apply for either interim or final authorization for the HSWA provisions identified in Table 1, as discussed in the following section of this preamble.

B. Effect on State Authorizations

As noted above, EPA would implement today's proposed rule in authorized States until they modify their programs to adopt these rules, and the modification is approved by EPA. Because the proposed rule would be promulgated pursuant to HSWA, a State submitting a program modification would be able to apply to receive either interim or final authorization under section 3006(g)(2) or 3006(b), respectively, on the basis of requirements that are substantially equivalent or equivalent to EPA's. The procedures and schedule for State program modifications under section 3006(b) are described in 40 CFR 271.21. The same procedures should be followed for section 3006(g)(2).

Section 271.21(e)(2) requires that States that have final authorization to modify their programs to reflect Federal program changes, and must subsequently submit the modification to EPA for approval. The deadline by which States must modify their programs to adopt this proposed regulation will be determined by the date of promulgation of the final rule in accordance with 40 CFR 271.21(e)(2).

States with authorized RCRA programs already may have regulations similar to those in today's proposed rule. These State regulations have not been assessed against the Federal regulations being proposed today to determine whether they meet the tests for authorization. Thus, a State would not be authorized to implement these proposed regulations in lieu of EPA until the State program modification is approved. Of course, States with existing regulations may continue to administer and enforce their regulations as a matter of State law. In implementing the Federal program, EPA will work with States under cooperative agreements to minimize duplication of efforts. In many cases, EPA will be able to defer to the States in their efforts to implement their programs, rather than take separate actions under Federal authority.

States that submit official applications for final authorization less than 12 months after promulgation of EPA's regulations are not required to include standards equivalent to those promulgated in their applications. However, the State must modify its program by the deadlines set forth in 40 CFR 271.21(e). States that submit official applications for final authorization 12 months after the effective date of these standards, when promulgated, must include standards in their applications. Section 271.3 sets forth the requirements a State must meet when submitting its final authorization application.

VIII. Compliance Dates

A. Notification

Under the Solid Waste Disposal Amendments of 1980 (Pub. L. 96–452), EPA was given the option of waiving the notification requirement under section 3010 of RCRA following revision of the Section 3001 regulations at the discretion of the Administrator. The Agency is proposing to waive the RCRA section 3010 notification requirement for only those persons who generate, transport, treat, store, or dispose of these hazardous wastes that have previously notified EPA or an authorized State of hazardous waste activities and have received an identification number. The Agency believes that most, if not all, persons who manage these wastes have already notified EPA and received an EPA identification number and therefore will not have to re-notify. However, any person who generates, transports, treats, stores, or disposes of these wastes has not previously notified and received an identification number, that person would be required to notify EPA or an authorized State no later than 90 days after publication of the final rule listing these wastes as hazardous, pursuant to section 3010 of RCRA. Notification instructions are set forth in 45 FR 12746, February 26, 1980.

B. Permitting

Because HSWA requirements are applicable in authorized States at the same time as in unauthorized States, EPA will regulate K137 and K138 until

States are authorized to regulate these wastes. Thus, once this regulation becomes effective in a final Agency rule, EPA will apply Federal regulations to these wastes and to their management in both authorized and unauthorized States. Facilities that treat, store, or dispose of K137 and K138, but that have not received a permit pursuant to section 3005 of RCRA and are not operating pursuant to interim status, might be eligible for interim status under HSWA (see section 3005(e)(1)(A)(ii) of RCRA, as amended). In order to operate pursuant to interim status, the eligible facilities are required to possess an EPA ID number pursuant to 40 CFR 270.70(a), and will be required to submit a part A permit application within 6 months of such publication.

Currently permitted facilities that manage UDMH wastes would be required to submit Class 1 permit modifications if they are to continue managing the newly regulated wastes in units that require a permit at the time these proposed regulations are published as final rules. The facilities would be required to obtain the necessary modification by the effective date of the rule, or they would be prohibited from accepting additional UDMH wastes.

Interim status facilities that manage UDMH wastes in units that require a permit would be required to file an amended part A permit application under 40 CFR 270.10(g) if they are to continue managing newly regulated wastes. The facilities would be required to file the necessary amendments by the effective date of the rule, or they would not receive interim status with respect to the UDMH wastes (i.e., they would be prohibited from accepting additional UDMH wastes until permitted).

Newly regulated facilities (i.e., facilities at which the only hazardous wastes that are managed are newly regulated UDMH wastes) would be required to qualify for interim status by the compliance date of the rule in order to continue managing UDMH wastes prior to receiving a permit. Under 40 CFR 270.70, an existing facility may obtain interim status by getting an EPA identification number and submitting a part A permit application by the effective date of this rule. To retain interim status, a newly-regulated land disposal facility must submit a part B permit application within one year after the effective date of the rule and certify that the facility is in compliance with all applicable ground water monitoring and financial responsibility requirements (see RCRA section 3005(e)(3)).

EPA recently promulgated amendments to the procedures for permit modifications for treatment, storage, and disposal facilities (see 53 FR 37934, September 28, 1988). The following discussion assumes implementation in accordance with the new rule. EPA would implement the UDMH listing regulations by using the new permit modification procedures, consistent with EPA policy (see 53 FR 37933, September 28, 1988).

Under the new regulation in 40 CFR 270.42, there are now three classes of permit modifications with different submittal and public participation requirements for each class. In § 270.42(g), which concerns newly listed or identified wastes, a permitted facility that is "in existence" as a hazardous waste facility for the newly listed or identified waste on the effective date of the notice must submit a Class 1 modification by that date. Essentially, this modification is a notification to the Agency that the facility is handling the waste. As part of the procedure, the permittee must also notify the public within 90 days of submittal to the Agency. Next, within 180 days of the effective date, the permittee must submit a Class 2 or 3 modification to the Agency. A permittee may submit a Class 2 modification if the newly regulated waste will be disposed in existing TSD units and will not require additional or different management practices from those authorized in the permit. A Class 2 modification requires public notice by the facility owner of the modification request, a 60 day public comment period, and an informal meeting between the owner and the public within the 60 day period. The proposed rule includes a "default provision," so that for Class 2 modifications, if the Agency does not make a decision within 120 days, the modification is automatically authorized for 180 days. If the Agency does not reach a decision by the end of that period, the modification is permanently authorized. If the newly regulated waste requires additional or different management practices, a Class 3 modification is required. The initial public notification and public meeting requirements are the same as for Class 2. However, after the end of the public comment period, the Agency will develop a draft permit modification, open a public comment period of 45 days and hold a public hearing.

IX. Regulatory Impact Analysis

Under Executive Order 12291, EPA must determine whether a regulation is "major" and, therefore, subject to the requirement of a Regulatory Impact Analysis. As already indicated, no costs are projected to be incurred by the generator of these wastes at the present time, since they ceased the production of UDMH itself, and thus do not currently generate the wastes.

However, the generator may resume production; when this occurs, the total additional incurred cost for disposal of the wastes as hazardous would be less than $2,000 (based on previous production levels), well under the $100 million constituting a major regulation. This cost would be insignificant and results from minimal additional compliance requirements, as these wastes were already handled as if they were hazardous.

Since EPA does not expect that the amendments proposed here will have an annual effect on the economy of $100 million or more, result in a measurable increase in cost or prices, or have an adverse impact on the ability of U.S.-based enterprises to compete in either domestic or foreign markets, these amendments are not considered to constitute a major action. As such, a Regulatory Impact Analysis is not required.

X. Regulatory Flexibility Act

Pursuant to the Regulatory Flexibility Act, 5 U.S.C. 601–612, whenever an agency is required to publish a general notice of rulemaking for any proposed or final rule, it must prepare and make available for public comment a regulatory flexibility analysis that describes the impact of the rule on small entities (*i.e.*, small businesses, small organizations, and small governmental jurisdictions). No regulatory flexibility analysis is required, however, if the head of the agency certifies that the rule will not have a significant economic impact on a substantial number of small entities.

The hazardous wastes proposed to be listed here are not generated by small entities (as defined by the Regulatory Flexibility Act). Accordingly, I hereby certify that this proposed amendment would not have a significant economic impact on a substantial number of small entities. This regulation, therefore, does not require a regulatory flexibility analysis.

XI. Paperwork Reduction Act

This proposed rule does not contain any information collection requirements subject to OMB review under the Paperwork Reduction Act of 1980, 44 U.S.C. Section 3501 *et seq.*

List of Subjects

40 CFR Part 261

Hazardous waste, Recycling.

40 CFR Part 271

Administrative practice and procedure, Confidential business information, Hazardous materials transportation, Hazardous waste, Indian lands, Intergovernmental relations, Penalties, Reporting and recordkeeping requirements, Water pollution control, Water supply.

40 CFR Part 302

Air pollution control, Chemicals, Hazardous materials, Hazardous materials transportation, Hazardous substances, Intergovernmental relations, Natural resources, Nuclear materials, Pesticides and pests, Radioactive materials, Reporting and recordkeeping requirements, Superfund, Waste treatment and disposal, Water pollution control.

Dated: April 23, 1990.

William K. Reilly,

Administrator.

References

Banerjee, S., H.C. Sikka and R. Gray. 1977. Environmental degradation of 1,1-dimethylhydrazine. Proc. Conf. Environ. Chem. Hydrazine Fuels. Tyndall AFB, FL. NTIS AD–AG54194.

Banerjee, S., E.J. Pack, H. Sikka and C.M. Kelly. 1981. Kinetics of oxidation of methylhydrazines in water. Factors controlling the formation of 1,1-dimethylnitrosamine from the corresponding hydrazine. Unpublished study. Syracuse Research Corporation, Syracuse, NY.

Braun, B.A. and J.A. Zirrolli. 1983. Environmental fate of hydrazine fuels in aqueous and soil environments. Eng. Serv. Lab., Air Force Eng. Serv. Center, Tyndall AFB, FL. Rep. No. ESL–TR–82–45. NTIS AD–A125813. 23pp.

Callahan, M.A., M.W. Slimak, N.W. Gabel, et al. 1979. Water related environmental fate of 129 priority pollutants. Vol. II. Dimethylnitrosamine. EPA–440/4–79–0296.

Hanst, P.L., J.W. Spence and M. Miller. 1977. Atmospheric chemistry of N-nitroso dimethylamine. Environ. Sci. Technol. 11:403–405.

Kane, D.A. and K.J. Williamson. 1983. Bacterial toxicity and metabolism of hydrazine fuels. Arch. Environ. Contam. Toxicol. 12:447–453.

MacNaughton, M.G., J. Zirrolli, T.B. Stauffer and D.A. Stone. 1979. Environmental chemistry of hydrazine fuels. Proc. 9th Conf. Environ. Toxicol., March. Aerosp. Med. Res. Lab., Aerosp. Med. Div., Air Force Systems Command, Wright-Patterson AFB, Dayton, OH. AMRL–TR79–68, pp. 121–128.

Mallik, M.A.B. and K. Tesfai. 1981. Transformation of nitrosamines in soil and in vitro by soil microorganisms. Bull. Environ. Contam. Toxicol. 27:115–121.

Oliver, J.E., P.C. Kearney and A. Kontson. 1979. Degradation of herbicide related nitrosamines in aerobic soils. J. Agric. Food Chem. 27:887–891.

Stauffer, T.B. 1977. Hydrazine Evaporation. Proc. Conf. Environ. Chem. Hydrazine Fuels, Tyndall AFB. NTIS AD-A054194. pp. 25–38.

Tate, R.L. and M. Alexander. 1975. Stability of nitrosoamines in samples of lake water, soil and sewage. J. Natl. Cancer Inst. 54:327–330.

Tuazon, E.C., W.P.L. Carter, A.M. Winer and J.N. Pitts, Jr. 1981. Reactions of hydrazines with ozone under simulated atmospheric conditions. Environ. Sci. Technol. 15:823–828.

For the reasons set out in the preamble, it is proposed to amend title 40 of the Code of Federal Regulations as follows:

PART 261—IDENTIFICATION AND LISTING OF HAZARDOUS WASTE

1. The authority citation for part 261 continues to read as follows:

Authority: 42 U.S.C. 6905, 6912(a), 6921, 6922, and 6938.

2. In § 261.32, add the following waste streams to the subgroup 'Organic Chemicals':

§ 261.32 Hazardous wastes from specific sources.

* * * * *

Industry and EPA hazardous waste No.	Hazardous waste	Hazard code
*	*	*
Organic chemicals		
*	*	*
K137	Flush water from catalyst removal system from the production of 1,1-dimethylhydrazine (UDMH) from carboxylic acid hydrazides.	(T)
K138	Spent catalyst and filter media from the production of 1,1-dimethylhydrazine (UDMH) from carboxylic acid hydrazides.	(T)
*	*	*

3. Add the following compound and analysis methods in alphabetical order to Table 1 of Appendix III of part 261:

Appendix III—Chemical Analysis Test Methods

* * * * *

TABLE 1.—ANALYSIS METHODS FOR ORGANIC CHEMICALS CONTAINED IN SW-846

Compound	Method Nos.
*	*
1,1-Dimethylhydrazine	8250, 8270
*	*

4. Add the following entries in numerical order to Appendix VII of part 261:

Appendix VII—Basis for Listing Hazardous Waste

EPA hazardous waste No.	Hazardous constituents for which listed
*	*
K137	1,1-Dimethylhydrazine (UDMH).
K138	1,1-Dimethylhydrazine (UDMH).
*	*

PART 271—REQUIREMENTS FOR AUTHORIZATION OF STATE HAZARDOUS WASTE PROGRAMS

5. The authority citation for Part 271 continues to read as follows:

Authority: 42 U.S.C. 6905, 6912(a), and 6926.

6. Section 271.1(j) is amended by adding the following entry to Table I in chronological order by date of publication:

§ 271.1 Purpose and scope.

* * * * *

(j) * * *

TABLE I.—REGULATIONS IMPLEMENTING THE HAZARDOUS AND SOLID WASTE AMENDMENTS OF 1984

Promulgation date	Title of regulation	FEDERAL REGISTER reference	Effective date
*	*	*	*
[Insert date of publication].	Listing Wastes from the Production of UDMH from Carboxylic Acid Hydrazides.	[Insert FEDERAL REGISTER page numbers].	[Insert Effective date]
*	*	*	*

PART 302—DESIGNATION, REPORTABLE QUANTITIES, AND NOTIFICATION

7. The authority citation for part 302 continues to read as follows:

Authority: Sections 101(1)(14) and 102(b) of the Comprehensive Environmental Response,

Compensation and Liability Act of 1980, 42 U.S.C. 9601(14) and 9602; Sections 311 and 501(a) of the Federal Water Pollution Control Act, 33 U.S.C. 1321 and 1361.

8. Section 302.4 is amended by adding the waste streams K137 and K138 to Table 302.4:

§ 302.4 Designation of hazardous substances.

* * * * *

TABLE 302.4.—LIST OF HAZARDOUS SUBSTANCES AND REPORTABLE QUANTITIES

Hazardous substance	CASRN	Regulatory synonyms	Statutory			Final RQ	
			RQ	Code 4	RCRA waste No.	Category	Pounds (kg)
*	*	*	*	*		*	
K137							
Flush water from catalyst removal system from the production of 1,1-dimethylhydrazine (UDMH) from carboxylic acid hydrazides.			10	4	K107	X	10 (4.54)
K138							
Spent catalyst and filter media from the production of 1,1-dimethylhydrazine (UDMH) from carboxylic acid hydrazides.			10	4	K108	X	10 (4.54)

* * * * *

4—indicates that the statutory source for designation of this hazardous substance under CERCLA is RCRA Section 3001.

* * * * *

[FR Doc. 90-9979 Filed 5-1-90; 8:45 am]
BILLING CODE 6560-50-M

federal register

Wednesday
May 2, 1990

Part V

Department of Education

Mid-Career Teacher Training Program; Notice Inviting Applications for New Awards for Fiscal Year 1990

DEPARTMENT OF EDUCATION

[CFDA No. 84.232]

Mid-Career Teacher Training Program; Notice Inviting Applications for New Awards for Fiscal Year (FY) 1990

Notice to Applicants: This notice is a complete application package. Together with the statute authorizing the program and the Education Department General Administrative Regulations (EDGAR), the notice contains all of the information, application forms, and instructions needed to apply for a grant under this competition.

Purpose of Program: To encourage institutions of higher education with schools or departments of education to establish and maintain programs that will provide teacher training to individuals who are moving to a career in education from another occupation.

Deadline for Transmittal of Applications: 7/2/90.

Deadline for Intergovernmental Review: 9/14/90.

Available Funds: $987,000.

The initial grant of up to $100,000 will be awarded for use during the two years following selection. Recipients demonstrating successful performance of the initial grant may receive a renewal grant for up to $50,000 for each of two additional years.

Estimated Range of Awards: $80,000–$100,000.

Estimated Average Size of Awards: $98,700.

Estimated Number of Awards: 10.

Note: The Department is not bound by any estimates in this notice.

Project Period: 48 months.

Applicable Regulations: The following regulations apply to the Mid-Career Teacher Training Program:

The Education Department General Administrative Regulations (EDGAR) in 34 CFR part 74 (Administration of Grants to Institutions of Higher Education, Hospitals, and Nonprofit Organizations), part 75 (Direct Grant Programs), part 77 (Definitions that Apply to Department Regulations), part 79 (Intergovernmental Review of Department of Education Programs and Activities), part 80 (Uniform Administrative Requirements for Grants and Cooperative Agreements to State and Local Governments), part 82 (New Restrictions On Lobbying), and part 85 (Government-wide Debarment and Suspension (Non-procurement) and Government-wide Requirements for Drug-Free Workplace (Grants)).

Description of Program. The Mid-Career Teacher Training Program is authorized by Title V, Part A of the Higher Education Act of 1965 (HEA), as amended (20 U.S.C. 1103–1103d).

Eligible parties. An institution of higher education, as defined by section 1201(a) of the HEA, with a school or department of education is eligible to apply for a grant under this program.

Contents of application. An application must demonstrate that—

(a) The applicant will establish and maintain a program of mid-career teacher retraining designed to prepare individuals for teacher certification requirements who already have a baccalaureate or advanced degree and job experience in education-related fields of study, including: Pre-school and early childhood education, military education or training, business education or training, or other education experience in fields where there are shortages of teachers of other educational needs to be met.

(b) The applicant has designed a project that includes at least the following elements:

(1) A screening mechanism to assure that individuals who are admitted to the program possess the current subject matter knowledge and the characteristics that would make them likely to succeed as classroom teachers;

(2) A clear set of program goals and expectations which are communicated to participants; and

(3) A curriculum that, when successfully completed, will provide participants with the skills and credentials needed to teach in specific subject areas;

(c) The program has been developed with the cooperation and assistance of the local business community;

(d) The program will be operated under a cooperative agreement between the institution and one or more State or local educational agencies; and

(e) The program will be designed and operated with the active participation of qualified teachers, including early childhood education specialists, where appropriate, and will include an in-service training component and follow-up assistance.

Invitational Priorities

The Secretary is particularly interested in applications that:

(a) Propose projects that accommodate the practical needs of individuals making a mid-career change, avoiding unnecessarily burdensome financial or academic requirements while maintaining quality of preparation for teacher certification requirements;

(b) Propose innovative ways to achieve academic preparation, such as—

(1) taking into consideration standards, procedures and training programs successfully used by private schools to ensure preparedness of new teachers;

(2) working with States to develop ways for individuals with uncertified teaching experience gained in the military, in private schools, at the college or university level, or through other experience, to substantially fulfill certification requirements, especially through State programs for alternate certification;

However, under 34 CFR 75.105(c)(1) an application that addresses one or more of these invitational priorities does not receive competitive or absolute preference over other applications.

Selection Procedures

Applications will be reviewed by a panel of experts in teacher training designated by the Secretary. The Secretary, provided that sufficient applications of adequate quality are received, will select at least one applicant from each of the 10 regions served by the Department of Education and, to the extent of available funds, assure that programs offered reflect all significant areas of national need in which shortages exist. The ten regions are as follows:

Region I Connecticut, Maine, Massachusetts, New Hampshire, Rhode Island and Vermont.

Region II New York, New Jersey, Puerto Rico, Virgin Islands.

Region III Delaware, District of Columbia, Maryland, Pennsylvania, Virginia, West Virginia.

Region IV Alabama, Florida, Georgia, Kentucky, Mississippi, North Carolina, South Carolina, Tennessee.

Region V Illinois, Indiana, Michigan, Minnesota, Ohio, Wisconsin.

Region VI Arkansas, Louisiana, New Mexico, Oklahoma, Texas.

Region VII Iowa, Kansas, Missouri, Nebraska.

Region VIII Colorado, Montana, North Dakota, South Dakota, Utah, Wyoming.

Region IX Arizona, California, Hawaii, Nevada, American Samoa, Guam, Trust Territory of the Pacific.

Region X Alaska, Idaho, Oregon, Washington.

Selection Criteria

(a)(1) The Secretary uses the following selection criteria to evaluate applications for new grants under this competition.

(2) The maximum score for all of these criteria is 100 points.

(3) The maximum score for each criterion is indicated in parentheses.

(b) *The criteria.*—(1) *Meeting the purposes of the authorizing statute.* (30 points) The Secretary reviews each application to determine how well the project will meet the purpose of the Mid-Career Teacher Training Program, title V, part A, HEA of 1965, as amended (referred to in these selection criteria as the authorizing statute), including consideration of—

(i) The objectives of the project; and

(ii) How the objectives of the project further the purposes of the authorizing statute.

(2) *Extent of need for the project.* (20 points) The Secretary reviews each application to determine the extent to which the project meets specific needs recognized in the authorizing statute, including consideration of—

(i) The needs addressed by the project;

(ii) How the applicant identified those needs;

(iii) How those needs will be met by the project; and

(iv) The benefits to be gained by meeting those needs.

(3) *Plan of operation.* (15 points) The Secretary reviews each application to determine the quality of the plan of operation for the project, including—

(i) The quality of the design of the project;

(ii) The extent to which the plan of management is effective and ensures proper and efficient administration of the project;

(iii) How well the objectives of the project relate to the purpose of the program;

(iv) The quality of the applicant's plan to use its resources and personnel to achieve each objective;

(v) How the applicant will ensure that project participants who are otherwise eligible to participate are selected without regard to race, color, national origin, gender, age, or handicapping condition; and

(vi) For grants under a program that requires the applicant to provide an opportunity for participation of students enrolled in private schools, the quality of the applicant's plan to provide that opportunity.

(4) *Quality of Key personnel.* (10 points)

(i) The Secretary reviews each application to determine the quality of key personnel the applicant plans to use on the project, including—

(A) The qualifications of the project director (if one is to be used);

(B) The qualifications of each of the other key personnel to be used in the project;

(C) The time that each person referred to in paragraph (b)(4)(i) (A) and (B) will commit to the project; and

(D) How the applicant, as part of its nondiscriminatory employment practices, will ensure that its personnel are selected for employment without regard to race, color, national origin, gender, age, or handicapping condition.

(ii) To determine personnel qualifications under paragraphs (b)(4)(i) (A) and (B), the Secretary considers—

(A) Experience and training in fields related to the objectives of the project; and

(B) Any other qualifications that pertain to the quality of the project.

(5) *Budget and cost effectiveness.* (5 points) The Secretary reviews each application to determine the extent to which—

(i) The budget is adequate to support the project; and

(ii) Costs are reasonable in relation to the objectives of the project.

(6) *Evaluation plan.* (10 points) The Secretary reviews each application to determine the quality of the evaluation plan for the project, including the extent to which the applicant's methods of evaluation—

(i) Are appropriate to the project; and

(ii) To the extent possible, are objective and produce data that are quantifiable.

(**Cross-reference:** See 34 CFR 75.590 Evaluation by the grantee.)

(7) *Adequacy of resources.* (10 points) The Secretary reviews each application to determine the adequacy of the resources that the applicant plans to devote to the project, including facilities, equipment, and supplies.

Intergovernmental Review of Federal Programs

This program is subject to the requirements of Executive Order 12372 (Intergovernmental Review of Federal Programs) and the regulations in 34 CFR part 79.

The objective of the Executive order is to foster an intergovernmental partnership and to strengthen federalism by relying on State and local processes for State and local government coordination and review of proposed Federal financial assistance.

Applicants must contact the appropriate State Single Point of Contact to find out about, and to comply with, the State's process under Executive Order 12372. Applicants proposing to perform activities in more than one State should immediately contact the Single Point of Contact for each of those States and follow the procedure established in each State under the Executive order. If you want to know the name and address of any State Single Point of Contact, see the list published in the **Federal Register** on September 15, 1989, pages 38342–38343.

In States that have not established a process or chosen a program for review, State, areawide, regional, and local entities may submit comments directly to the Department.

Any State Process Recommendation and other comments submitted by a State Single Point of Contact and any comments from State, areawide, regional, and local entities must be mailed or hand-delivered by the date indicated in this notice to the following address: The Secretary, E.O. 12372—CFDA # 84.232A, U.S. Department of Education, room 4161, 400 Maryland Avenue, SW, Washington, DC 20202–0125.

Proof of mailing will be determined on the same basis as applications (see 34 CFR 75.102). Recommendations or comments may be hand-delivered until 4:30 p.m. (Washington, D.C. time) on the date indicated in this notice.

Please note that this address is not the same address as the one to which the applicant submits its completed application. Do not send application to the above address.

Instructions for Transmittal of Applications

(a) If an applicant wants to apply for a grant, the applicant shall—

(1) Mail the original and two copies of the application on or before the deadline date to: U.S. Department of Education, Application Control Center, Attention: (CFDA #84.232A), Washington, DC 20202–4725 or

(2) Hand deliver the original and two copies of the application by 4:30 p.m. (Washington, DC time) on the deadline date to: U.S. Department of Education, Application Control Center, Attention: (CFDA #84.232A), room #3633, Regional Office Building #3, 7th and D Streets, SW., Washington, DC.

(b) An applicant must show one of the following as proof of mailing:

(1) A legibly dated U.S. Postal Service postmark.

(2) A legible mail receipt with the date of mailing stamped by the U.S. Postal Service.

(3) A dated shipping label, invoice, or receipt from a commercial carrier.

(4) Any other proof of mailing acceptable to the Secretary.

(c) If an application is mailed through the U.S. Postal Service, the Secretary does not accept either of the following as proof of mailing:

(1) A private metered postmark.

(2) A mail receipt that is not dated by the U.S. Postal Service.

Notes: (1) The U.S. Postal Service does not uniformly provide a dated postmark. Before relying on this method, an applicant should check with its local post office.

(2) The Application Control Center will mail a Grant Application Receipt Acknowledgment to each applicant. If an applicant fails to receive the notification of application receipt within 15 days from the date of mailing the application, the applicant should call the U.S. Department of Education Application Control Center at (202) 732–2495.

(3) The applicant *must* indicate on the envelope and—if not provided by the Department—in Item 10 of the Application for Federal Assistance (Standard Form 424) the CFDA number—and letter, if any—of the competition under which the application is being submitted.

Application Instructions and Forms

The appendix to this application is divided into three parts plus a statement regarding estimated public reporting burden and various assurances and certifications. These parts and additional materials are organized in the same manner that the submitted application should be organized. The parts and additional materials are as follows:

Part I: Application for Federal Assistance (Standard Form 424 (Rev. 4–88)) and instructions.

Part II: Budget Information—Non-Construction Programs (Standard Form 424A) and instructions.

Part III: Application Narrative.

Additional Materials:

Estimated Public Reporting Burden.

Assurances—Non-Construction Programs (Standard Form 424B).

Certification regarding Debarment, Suspension, and Other Responsibility Matters: Primary Covered Transactions (ED Form GCS–008) and instructions.

Certification regarding Debarment, Suspension, Ineligibility and Voluntary Exclusion: Lower Tier Covered Transactions (ED Form GCS–009) and instructions.

Note: ED Form GCS–009 is intended for the use of grantees and should not be transmitted to the Department.)

Certification Regarding Drug-Free Workplace Requirements: Grantees Other Than Individuals (ED 80–0004).

Certification Regarding Lobbying for Grants and Cooperative Agreements (ED 80–0008).

Note: This form is required if requesting, making, or entering into a grant or cooperative agreement for more than $100,000.)

Disclosure of Lobbying Activities (Standard Form LLL) (if applicable) and instructions; and Disclosure of Lobbying Activities Continuation Sheet (Standard Form LLL–A).

An applicant may submit information on a photostatic copy of the application and budget forms, the assurances, and the certifications. However, the application form, the assurances, and the certifications must each have an original signature. No grant may be awarded unless a completed application form has been received.

FOR FURTHER INFORMATION CONTACT: Douglas L. Alexander, U.S. Department of Education, Office of Educational Research and Improvement, 555 New Jersey Avenue, NW., Washington, DC 20208–5643; Phone 202/357–6187.

Program Authority: 20 U.S.C. 1103–1103d.

Dated: April 26, 1990.

Christopher T. Cross,

Assistant Secretary for Educational Research and Improvement.

BILLING CODE 4000–01–M

Appendix

OMB Approval No. 0348-0043

APPLICATION FOR FEDERAL ASSISTANCE

1. TYPE OF SUBMISSION: Application ☐ Construction ☒ Non-Construction; Preapplication ☐ Construction ☐ Non-Construction	2. DATE SUBMITTED	Applicant Identifier
	3. DATE RECEIVED BY STATE	State Application Identifier
	4. DATE RECEIVED BY FEDERAL AGENCY	Federal Identifier

5. APPLICANT INFORMATION

Legal Name	Organizational Unit
Address (give city, county, state, and zip code)	Name and telephone number of the person to be contacted on matters involving this application (give area code)

6. EMPLOYER IDENTIFICATION NUMBER (EIN): ☐☐ – ☐☐☐☐☐☐☐

7. TYPE OF APPLICANT: (enter appropriate letter in box) ☐

A. State
B. County
C. Municipal
D. Township
E. Interstate
F. Intermunicipal
G. Special District
H. Independent School Dist.
I. State Controlled Institution of Higher Learning
J. Private University
K. Indian Tribe
L. Individual
M. Profit Organization
N. Other (Specify) _____

8. TYPE OF APPLICATION:

☒ New ☐ Continuation ☐ Revision

If Revision, enter appropriate letter(s) in box(es): ☐ ☐

A. Increase Award B. Decrease Award C. Increase Duration
D. Decrease Duration Other (specify):

_____

9. NAME OF FEDERAL AGENCY:

U.S. Department of Education

10. CATALOG OF FEDERAL DOMESTIC ASSISTANCE NUMBER: 8 4 . 2 3 2

TITLE: Mid-Career Teacher Training Program

11. DESCRIPTIVE TITLE OF APPLICANT'S PROJECT:

12. AREAS AFFECTED BY PROJECT (cities, counties, states, etc.):

13. PROPOSED PROJECT: Start Date	Ending Date	14. CONGRESSIONAL DISTRICTS OF: a. Applicant	b. Project

15. ESTIMATED FUNDING:

a. Federal	$ .00
b. Applicant	$ .00
c. State	$ .00
d. Local	$ 00
e. Other	$ .00
f. Program Income	$ 00
g. TOTAL	$ 00

16. IS APPLICATION SUBJECT TO REVIEW BY STATE EXECUTIVE ORDER 12372 PROCESS?

a. YES. THIS PREAPPLICATION/APPLICATION WAS MADE AVAILABLE TO THE STATE EXECUTIVE ORDER 12372 PROCESS FOR REVIEW ON:

DATE _____

b. NO ☐ PROGRAM IS NOT COVERED BY E.O. 12372

☐ OR PROGRAM HAS NOT BEEN SELECTED BY STATE FOR REVIEW

17. IS THE APPLICANT DELINQUENT ON ANY FEDERAL DEBT?

☐ Yes If "Yes," attach an explanation. ☐ No

18. TO THE BEST OF MY KNOWLEDGE AND BELIEF, ALL DATA IN THIS APPLICATION/PREAPPLICATION ARE TRUE AND CORRECT, THE DOCUMENT HAS BEEN DULY AUTHORIZED BY THE GOVERNING BODY OF THE APPLICANT AND THE APPLICANT WILL COMPLY WITH THE ATTACHED ASSURANCES IF THE ASSISTANCE IS AWARDED

a. Typed Name of Authorized Representative	b. Title	c. Telephone number
d. Signature of Authorized Representative		e. Date Signed

Previous Editions Not Usable

Standard Form 424 (REV 4-88)
Prescribed by OMB Circular A-102

Authorized for Local Reproduction

Instructions for the SF 424

This is a standard form used by applicants as a required facesheet for preapplications and applications submitted for Federal assistance. It will be used by Federal agencies to obtain applicant certification that States which have established a review and comment procedure in response to Executive Order 12372 and have selected the program to be included in their process, have been given an opportunity to review the applicant's submission.

Item: Entry:

1. Self-explanatory.

2. Date application submitted to Federal agency (or State if applicable) & applicant's control number (if applicable).

3. State use only (if applicable).

4. If this application is to continue or revise an existing award, enter present Federal identifier number. If for a new project, leave blank.

5. Legal name of applicant, name of primary organizational unit which will undertake the assistance activity, complete address of the applicant, and name and telephone number of the person to contact on matters related to this application.

6. Enter Employer Identification Number (EIN) as assigned by the Internal Revenue Service.

7. Enter the appropriate letter in the space provided.

8. Check appropriate box and enter appropriate letter(s) in the space(s) provided:

—"New" means a new assistance award.

—"Continuation" means an extension for an additional funding/budget period for a project with a projected completion date.

—"Revision" means any change in the Federal Government's financial obligation or contingent liability from an existing obligation.

9. Name of Federal agency from which assistance is being requested with this application.

10. Use the Catalog of Federal Domestic Assistance number and title of the program under which assistance is requested.

11. Enter a brief descriptive title of the project. If more than one program is involved, you should append an explanation on a separate sheet. If appropriate (e.g., construction or real property projects), attach a map showing project location. For preapplications, use a separate sheet to provide a summary description of this project.

12. List only the largest political entities affected (e.g., State, counties, cities).

13. Self-explanatory.

14. List the applicant's Congressional District and any District(s) affected by the program or project.

15. Amount requested or to be contributed during the first funding/budget period by each contributor. Value of in-kind contributions should be included on appropriate lines as applicable. If the action will result in a dollar change to an existing award, indicate *only* the amount of the change. For decreases, enclose the amounts in parentheses. If both basic and supplemental amounts are included, show breakdown on an attached sheet. For multiple program funding, use totals and show breakdown using same categories as item 15.

16. Applicants should contact the State Single Point of Contact (SPOC) for Federal Executive Order 12372 to determine whether the application is subject to the State intergovernmental review process.

17. This question applies to the applicant organization, not the person who signs as the authorized representative. Categories of debt include delinquent audit disallowances, loans and taxes.

18. To be signed by the authorized representative of the applicant. A copy of the governing body's authorization for you to sign this application as official representative must be on file in the applicant's office. (Certain Federal agencies may require that this authorization be submitted as part of the application.)

BILLING CODE 4000-01-M

BUDGET INFORMATION — Non-Construction Programs

OMB Approval No. 0348-0044

SECTION A – BUDGET SUMMARY

Grant Program Function or Activity (a)	Catalog of Federal Domestic Assistance Number (b)	Estimated Unobligated Funds		New or Revised Budget		
		Federal (c)	Non-Federal (d)	Federal (e)	Non-Federal (f)	Total (g)
1.		$	$	$	$	$
2.						
3.						
4.						
5. TOTALS		$	$	$	$	$

SECTION B – BUDGET CATEGORIES

6 Object Class Categories	GRANT PROGRAM, FUNCTION OR ACTIVITY				Total (5)
	(1)	(2)	(3)	(4)	
a. Personnel	$	$	$	$	$
b. Fringe Benefits					
c. Travel					
d. Equipment					
e. Supplies					
f. Contractual					
g. Construction					
h. Other					
i. Total Direct Charges (sum of 6a - 6h)					
j. Indirect Charges					
k. TOTALS (sum of 6i and 6j)	$	$	$	$	$
7. Program Income	$	$	$	$	$

Authorized for Local Reproduction

Standard Form 424A (4-88)
Prescribed by OMB Circular A-102

SECTION C - NON-FEDERAL RESOURCES

(a) Grant Program	(b) Applicant	(c) State	(d) Other Sources	(e) TOTALS
8.	$	$	$	$
9.				
10.				
11.				
12. TOTALS (sum of lines 8 and 11)	$	$	$	$

SECTION D - FORECASTED CASH NEEDS

	Total for 1st Year	1st Quarter	2nd Quarter	3rd Quarter	4th Quarter
13. Federal	$	$	$	$	$
14. NonFederal					
15. TOTAL (sum of lines 13 and 14)	$	$	$	$	$

SECTION E - BUDGET ESTIMATES OF FEDERAL FUNDS NEEDED FOR BALANCE OF THE PROJECT

(a) Grant Program	FUTURE FUNDING PERIODS (Years)			
	(b) First	(c) Second	(d) Third	(e) Fourth
16.	$	$	$	$
17.				
18.				
19.				
20. TOTALS (sum of lines 16 -19)	$	$	$	$

SECTION F - OTHER BUDGET INFORMATION

(Attach additional Sheets if Necessary)

21. Direct Charges:	22. Indirect Charges:
23. Remarks	

SF 424A (4-88) Page 2
Prescribed by OMB Circular A-102

BILLING CODE 4000-01-C

Authorized for Local Reproduction

Instructions for the SF–424A

General Instructions

This form is designed so that application can be made for funds from one or more grant programs. In preparing the budget, adhere to any existing Federal grantor agency guidelines which prescribe how and whether budgeted amounts should be separately shown for different functions or activities within the program. For some programs, grantor agencies may require budgets to be separately shown by function or activity. For other programs, grantor agencies may require a breakdown by function or activity. Sections A, B, C, and D should include budget estimates for the whole project except when applying for assistance which requires Federal authorization in annual or other funding period increments. In the latter case, Sections A, B, C, and D should provide the budget for the first budget period (usually a year) and Section E should present the need for Federal assistance in the subsequent budget periods. All applications should contain a breakdown by the object class categories shown in Lines a–k of Section B.

Section A. Budget Summary

Lines 1–4, Columns (a) and (b)

For applications pertaining to a *single* Federal grant program (Federal Domestic Assistance Catalog number) and *not requiring* a functional or activity breakdown, enter on Line 1 under *Column* (a) the catalog program title and the catalog number in Column (b).

For applications pertaining to a *single* program *requiring* budget amounts by multiple functions or activities, enter the name of each activity or function on each line in Column (a), and enter the catalog number in Column (b). For applications pertaining to multiple programs where none of the programs require a breakdown by function or activity, enter the catalog program title on each line in Column (a) and the respective catalog number on each line in Column (b).

For applications pertaining to *multiple* programs where one or more programs *require* a breakdown by function or activity, prepare a separate sheet for each program requiring the breakdown. Additional sheets should be used when one form does not provide adequate space for all breakdown of data required. However, when more than one sheet is used, the first page should provide the summary totals by programs.

Lines 1–4, Columns (c) through (g.)

For new applications, leave Columns (c) and (d) blank. For each line entry in Columns (a) and (b), enter in Columns (e), (f), and (g) the appropriate amounts of funds needed to support the project for the first funding period (usually a year).

Lines 1–4, Columns (c) through (g.) (continued)

For continuing grant program applications, submit these forms before the end of each funding period as required by the grantor agency. Enter in Columns (c) and (d) the estimated amounts of funds which will remain unobligated at the end of the grant funding period only if the Federal grantor agency instructions provide for this. Otherwise, leave these columns blank. Enter in columns (e) and (f) the amounts of funds needed for the upcoming period. The amount(s) in Column (g) should be the sum of amounts in Columns (e) and (f).

For supplemental grants and changes to existing grants, do not use Columns (c) and (d). Enter in Column (e) the amount of the increase or decrease of Federal funds and enter in Column (f) the amount of the increase or decrease of non-Federal funds. In Column (g) enter the new total budgeted amount (Federal or non-Federal) which includes the total previous authorized budgeted amounts plus or minus, as appropriate, the amounts shown in Columns (e) and (f). The amount(s) in Column (g) should not equal the sum of amounts in Columns (e) and (f).

Line 5—Show the totals for all columns used.

Section B Budget Categories

In the column headings (1) through (4), enter the titles of the same programs, functions, and activities shown on Lines 1–4, Column (a), Section A. When additional sheets are prepared for Section A, provide similar column headings on each sheet. For each program, function or activity, fill in the total requirements for funds (both Federal and non-Federal) by object class categories.

Lines 6a–i—Show the totals of Lines 6a to 6h in each column.

Line 6j—Show the amount of indirect cost.

Line 6k—Enter the total of amounts on Lines 6i and 6j. For all applications for new grants and continuation grants the total amount in column (5), Line 6k, should be the same as the total amount shown in Section A, Column (g), Line 5. For supplemental grants and changes to grants, the total amount of the increase or decrease as shown in Columns (1)–(4), Line 6k should be the same as the sum of the amounts in Section A, Columns (e) and (f) on Line 5.

Line 7—Enter the estimated amount of income, if any, expected to be generated from this project. Do not add or subtract this amount from the total project amount. Show under the program narrative statement the nature and source of income. The estimated amount of program income may be considered by the federal grantor agency in determining the total amount of the grant.

Section C. Non-Federal-Resources

Lines 8–11—Enter amounts of non-Federal resources that will be used on the grant. If in-kind contributions are included, provide a brief explanation on a separate sheet.

Column (a)—Enter the program titles identical to Column (a), section A. A breakdown by function or activity is not necessary.

Column (b)—Enter the contribution to be made by the applicant.

Column (c)—Enter the amount of the State's cash and in-kind contribution if the applicant is not a State or State agency. Applicants which are a State or State agencies should leave this column blank.

Column (d)—Enter the amount of cash and in-kind contributions to be made from all other sources.

Column (e)—Enter totals of Columns (b), (c), and (d).

Line 12—Enter the total for each of Columns (b)–(e). The amount in Column (e) should be equal to the amount on line 5, Column (f), section A.

Section D. Forecasted Cash Needs

Line 13—Enter the amount of cash needed by quarter from the grantor agency during the first year.

Line 14—Enter the amount of cash from all other sources needed by quarter during the first year.

Line 15—Enter the totals of amounts on Lines 13 and 14.

Section E. Budget Estimates of Federal Funds Needed for Balance of the Project

Line 16–19—Enter in Column (a) the same grant program titles shown in Column (a), section A. A breakdown by function or activity is not necessary. For new applications and continuation grant applications, enter in the proper columns amounts of Federal funds which will be needed to complete the program or project over the succeeding funding periods (usually in years). This section need not be completed for revisions (amendments, changes, or

supplements) to funds for the current year of existing grants.

If more than four lines are needed to list the program titles, submit additional schedules as necessary.

Line 20—Enter the total for each of the Columns (b)–(e). When additional schedules are prepared for this section, annotate accordingly and show the overall totals on this line.

Section F. Other Budget Information

Line 21—Use this space to explain amounts for individual direct object-class cost categories that may appear to be out of the ordinary or to explain the details as required by the Federal grantor agency.

Line 22—Enter the type of indirect rate (provisional, predetermined, final or fixed) that will be in effect during the funding period, the estimated amount of the base to which the rate is applied, and the total indirect expense.

Line 23—Provide any other explanations or comments deemed necessary.

Application Narrative

Before preparing the Application Narrative an applicant should read carefully the description of the program, the information regarding priorities, and the selection criteria the Secretary uses to evaluate applications.

The narrative should encompass each function or activity for which funds are being requested and should—

1. Begin with an Abstract; that is, a summary of the proposed project;

2. Describe the proposed project in light of each of the selection criteria in the order in which the criteria are listed in this application package. In addressing criterion 6, Evaluation Plan, applicants are strongly encouraged to show how the evaluation plan relates to the goals and objectives of the project, and to describe expected outcomes as well as the outcome data that will be collected. The Secretary is particularly interested in outcome data that includes comparisons between qualifications of project participants and those of participants in other teacher preparation programs, including fields of study in which they will be prepared to teach and scores on standardized teaching exams; and

3. Include any other pertinent information that might assist the Secretary in reviewing the application.

An applicant may submit information on a photostatic copy of the application and budget forms, the assurances, and the certifications. However, the application form, the assurances, and the certifications must each have an original signature. No grant may be awarded unless a completed application form has been received.

Estimated Public Reporting Burden

Under terms of the Paperwork Reduction Act of 1980, as amended, and the regulations implementing that Act, the Department of Education invites comments on the public reporting burden in this collection of information. Public reporting burden for this collection of information is estimated to average twenty hours per response, including the time for reviewing instructions, searching existing data sources, gathering and maintaining the data needed, and completing and reviewing the collection of information. You may send comments regarding this burden estimate or any other aspect of this collection of information, including suggestions for reducing this burden, to the U.S. Department of Education, Information Management and Compliance Division, Washington, DC 20202–4651; and to the Office of Management and Budget, Paperwork Reduction Project 1850–0647, Washington, DC 20503.

(Information collection approved under OMB control number 1850–0647. Expiration date: 3/31/91.)

BILLING CODE 4000-01-M

OMB Approval No. 0348-0040

ASSURANCES — NON-CONSTRUCTION PROGRAMS

Note: Certain of these assurances may not be applicable to your project or program. If you have questions, please contact the awarding agency. Further, certain Federal awarding agencies may require applicants to certify to additional assurances. If such is the case, you will be notified.

As the duly authorized representative of the applicant I certify that the applicant:

1. Has the legal authority to apply for Federal assistance, and the institutional, managerial and financial capability (including funds sufficient to pay the non-Federal share of project costs) to ensure proper planning, management and completion of the project described in this application.

2. Will give the awarding agency, the Comptroller General of the United States, and if appropriate, the State, through any authorized representative, access to and the right to examine all records, books, papers, or documents related to the award; and will establish a proper accounting system in accordance with generally accepted accounting standards or agency directives.

3. Will establish safeguards to prohibit employees from using their positions for a purpose that constitutes or presents the appearance of personal or organizational conflict of interest, or personal gain.

4. Will initiate and complete the work within the applicable time frame after receipt of approval of the awarding agency.

5. Will comply with the Intergovernmental Personnel Act of 1970 (42 U.S.C. §§ 4728-4763) relating to prescribed standards for merit systems for programs funded under one of the nineteen statutes or regulations specified in Appendix A of OPM's Standards for a Merit System of Personnel Administration (5 C.F.R. 900, Subpart F).

6. Will comply with all Federal statutes relating to nondiscrimination. These include but are not limited to: (a) Title VI of the Civil Rights Act of 1964 (P.L. 88-352) which prohibits discrimination on the basis of race, color or national origin; (b) Title IX of the Education Amendments of 1972, as amended (20 U.S.C. §§ 1681-1683, and 1685-1686), which prohibits discrimination on the basis of sex; (c) Section 504 of the Rehabilitation Act of 1973, as amended (29 U.S.C. § 794), which prohibits discrimination on the basis of handicaps; (d) the Age Discrimination Act of 1975, as amended (42 U.S.C.§§ 6101-6107), which prohibits discrimination on the basis of age; (e) the Drug Abuse Office and Treatment Act of 1972 (P.L. 92-255), as amended, relating to nondiscrimination on the basis of drug abuse; (f) the Comprehensive Alcohol Abuse and Alcoholism Prevention, Treatment and Rehabilitation Act of 1970 (P.L. 91-616), as amended, relating to nondiscrimination on the basis of alcohol abuse or alcoholism; (g) §§ 523 and 527 of the Public Health Service Act of 1912 (42 U.S.C. 290 dd-3 and 290 ee-3), as amended, relating to confidentiality of alcohol and drug abuse patient records; (h) Title VIII of the Civil Rights Act of 1968 (42 U.S.C. § 3601 et seq.), as amended, relating to nondiscrimination in the sale, rental or financing of housing; (i) any other nondiscrimination provisions in the specific statute(s) under which application for Federal assistance is being made; and (j) the requirements of any other nondiscrimination statute(s) which may apply to the application.

7. Will comply, or has already complied, with the requirements of Titles II and III of the Uniform Relocation Assistance and Real Property Acquisition Policies Act of 1970 (P.L. 91-646) which provide for fair and equitable treatment of persons displaced or whose property is acquired as a result of Federal or federally assisted programs. These requirements apply to all interests in real property acquired for project purposes regardless of Federal participation in purchases.

8. Will comply with the provisions of the Hatch Act (5 U.S.C. §§ 1501-1508 and 7324-7328) which limit the political activities of employees whose principal employment activities are funded in whole or in part with Federal funds.

9. Will comply, as applicable, with the provisions of the Davis-Bacon Act (40 U.S.C. §§ 276a to 276a-7), the Copeland Act (40 U.S.C. § 276c and 18 U.S.C. §§ 874), and the Contract Work Hours and Safety Standards Act (40 U.S.C. §§ 327-333), regarding labor standards for federally assisted construction subagreements.

10. Will comply, if applicable, with flood insurance purchase requirements of Section 102(a) of the Flood Disaster Protection Act of 1973 (P.L. 93-234) which requires recipients in a special flood hazard area to participate in the program andto purchase flood insurance if the total cost of insurable construction and acquisition is $10,000 or more.

11. Will comply with environmental standards which may be prescribed pursuant to the following: (a) institution of environmental quality control measures under the National Environmental Policy Act of 1969 (P.L. 91-190) and Executive Order (EO) 11514; (b) notification of violating facilities pursuant to EO 11738; (c) protection of wetlands pursuant to EO 11990; (d) evaluation of flood hazards in floodplains in accordance with EO 11988; (e) assurance of project consistency with the approved State management program developed under the Coastal Zone Management Act of 1972 (16 U.S.C. §§ 1451 et seq.); (f) conformity of Federal actions to State (Clear Air) Implementation Plans under Section 176(c) of the Clear Air Act of 1955, as amended (42 U.S.C. § 7401 et seq.); (g) protection of underground sources of drinking water under the Safe Drinking Water Act of 1974, as amended, (P.L. 93-523); and (h) protection of endangered species under the Endangered Species Act of 1973, as amended, (P.L. 93-205).

12. Will comply with the Wild and Scenic Rivers Act of 1968 (16 U.S.C. §§ 1271 et seq.) related to protecting components or potential components of the national wild and scenic rivers system.

13. Will assist the awarding agency in assuring compliance with Section 106 of the National Historic Preservation Act of 1966, as amended (16 U.S.C. 470), EO 11593 (identification and protection of historic properties), and the Archaeological and Historic Preservation Act of 1974 (16 U.S.C. 469a-1 et seq.).

14. Will comply with P.L. 93-348 regarding the protection of human subjects involved in research, development, and related activities supported by this award of assistance.

15. Will comply with the Laboratory Animal Welfare Act of 1966 (P.L. 89-544, as amended, 7 U.S.C. 2131 et seq.) pertaining to the care, handling, and treatment of warm blooded animals held for research, teaching, or other activities supported by this award of assistance.

16. Will comply with the Lead-Based Paint Poisoning Prevention Act (42 U.S.C. §§ 4801 et seq.) which prohibits the use of lead based paint in construction or rehabilitation of residence structures.

17. Will cause to be performed the required financial and compliance audits in accordance with the Single Audit Act of 1984.

18. Will comply with all applicable requirements of all other Federal laws, executive orders, regulations and policies governing this program.

SIGNATURE OF AUTHORIZED CERTIFYING OFFICIAL	TITLE
APPLICANT ORGANIZATION	DATE SUBMITTED

SF 424B (4-88) Back

Certification Regarding Debarment, Suspension, and Other Responsibility Matters Primary Covered Transactions

This certification is required by the regulations implementing Executive Order 12549, Debarment and Suspension, 34 CFR Part 85, Section 85.510, Participants' responsibilities. The regulations were published as Part VII of the May 26, 1988 Federal Register (pages 19160-19211). Copies of the regulations may be obtained by contacting the U.S. Department of Education, Grants and Contracts Service, 400 Maryland Avenue, S.W. (Room 3633 GSA Regional Office Building No. 3), Washington, D.C. 20202-4725, telephone (202) 732-2505.

(BEFORE COMPLETING CERTIFICATION, READ INSTRUCTIONS ON REVERSE)

(1) The prospective primary participant certifies to the best of its knowledge and belief, that it and its principals:

(a) Are not presently debarred, suspended, proposed for debarment, declared ineligible, or voluntarily excluded from covered transactions by any Federal department or agency;

(b) Have not within a three-year period preceding this proposal been convicted of or had a civil judgment rendered against them for commission of fraud or a criminal offense in connection with obtaining, attempting to obtain, or performing a public (Federal, State or local) transaction or contract under a public transaction; violation of Federal or State antitrust statutes or commission of embezzlement, theft, forgery, bribery, falsification or destruction of records, making false statements, or receiving stolen property;

(c) Are not presently indicted for or otherwise criminally or civilly charged by a governmental entity (Federal, State or local) with commission of any of the offenses enumerated in paragraph (1)(b) of this certification; and

(d) Have not within a three-year period preceding this application/proposal had one or more public transactions (Federal, State or local) terminated for cause or default.

(2) Where the prospective primary participant is unable to certify to any of the statements in this certification, such prospective participant shall attach an explanation to this proposal.

Organization Name PR/Award Number or Project Name

Name and Title of Authorized Representative

Signature Date

Instructions for Certification

1. By signing and submitting this proposal, the prospective primary participant is providing the certification set out below.

2. The inability of a person to provide the certification required below will not necessarily result in denial of participation in this covered transaction. The prospective participant shall submit an explanation of why it cannot provide the certification set out below. The certification or explanation will be considered in connection with the department or agency's determination whether to enter into this transaction. However, failure of the prospective primary participant to furnish a certification or an explanation shall disqualify such person from participation in this transaction.

3. The certification in this clause is a material representation of fact upon which reliance was placed when the department or agency determined to enter into this transaction. If it is later determined that the prospective primary participant knowingly rendered an erroneous certification, in addition to other remedies available to the Federal Government, the department or agency may terminate this transaction for cause or default.

4. The prospective primary participant shall provide immediate written notice to the department or agency to whom this proposal is submitted if at any time the prospective primary participant learns that its certification was erroneous when submitted or has become erroneous by reason of changed circumstances.

5. The terms "covered transaction," "debarred," "suspended," "ineligible," "lower tier covered transaction," "participant," "person," "primary covered transaction," "principal," "proposal," and "voluntarily excluded," as used in this clause, have the meanings set out in the Definitions and Coverage sections of the rules implementing Executive Order 12549. You may contact the department or agency to which this proposal is being submitted for assistance in obtaining a copy of those regulations.

6. The prospective primary participant agrees by submitting this proposal that, should the proposed covered transaction be entered into, it shall not knowingly enter into any lower tier covered transaction with a person who is debarred, suspended, declared ineligible, or voluntarily excluded from participation in this covered transaction, unless authorized by the department or agency entering into this transaction.

7. The prospective primary participant further agrees by submitting this proposal that it will include the clause titled "Certification Regarding Debarment, Suspension, Ineligibility, and Voluntary Exclusion–Lower Tier Covered Transactions," provided by the department or agency entering into this covered transaction, without modification, in all lower tier covered transactions and in all solicitations for lower tier covered transactions.

8. A participant in a covered transaction may rely upon a certification of a prospective participant in a lower tier covered transaction that it is not debarred, suspended, ineligible, or voluntarily excluded from the covered transaction, unless it knows that the certification is erroneous. A participant may decide the method and frequency by which it determines the eligibility of its principals. Each participant may, but is not required to, check the Nonprocurement List.

9. Nothing contained in the foregoing shall be construed to require establishment of a system of records in order to render in good faith the certification required by this clause. The knowledge and information of a participant is not required to exceed that which is normally possessed by a prudent person in the ordinary course of business dealings.

10. Except for transactions authorized under paragraph 6 of these instructions, if a participant in a covered transaction knowingly enters into a lower tier covered transaction with a person who is suspended, debarred, ineligible, or voluntarily excluded from participation in this transaction, in addition to other remedies available to the Federal Government, the department or agency may terminate this transaction for cause or default.

Certification Regarding Debarment, Suspension, Ineligibility and Voluntary Exclusion Lower Tier Covered Transactions

This certification is required by the regulations implementing Executive Order 12549, Debarment and Suspension, 34 CFR Part 85, Section 85.510, Participants' responsibilities. The regulations were published as Part VII of the May 26, 1988 Federal Register (pages 19160-19211). Copies of the regulations may be obtained by contacting the person to which this proposal is submitted.

(BEFORE COMPLETING CERTIFICATION, READ INSTRUCTIONS ON REVERSE)

(1) The prospective lower tier participant certifies, by submission of this proposal, that neither it nor its principals are presently debarred, suspended, proposed for debarment, declared ineligible, or voluntarily excluded from participation in this transaction by any Federal department or agency.

(2) Where the prospective lower tier participant is unable to certify to any of the statements in this certification, such prospective participant shall attach an explanation to this proposal.

Organization Name PR/Award Number or Project Name

Name and Title of Authorized Representative

Signature Date

ED Form GCS-009, (REV 12/88)

Instructions for Certification

1. By signing and submitting this proposal, the prospective lower tier participant is providing the certification set out below.

2. The certification in this clause is a material representation of fact upon which reliance was placed when this transaction was entered into. If it is later determined that the prospective lower tier participant knowingly rendered an erroneous certification, in addition to other remedies available to the Federal Government, the department or agency with which this transaction originated may pursue available remedies, including suspension and/or debarment.

3. The prospective lower tier participant shall provide immediate written notice to the person to which this proposal is submitted if at any time the prospective lower tier participant learns that its certification was erroneous when submitted or has become erroneous by reason of changed circumstances.

4. The terms "covered transaction," "debarred," "suspended," "ineligible," "lower tier covered transaction," "participant," "person," "primary covered transaction," "principal," "proposal," and "voluntarily excluded," as used in this clause, have the meanings set out in the Definitions and Coverage sections of rules implementing Executive Order 12549. You may contact the person to which this proposal is submitted for assistance in obtaining a copy of those regulations.

5. The prospective lower tier participant agrees by submitting this proposal that, should the proposed covered transaction be entered into, it shall not knowingly enter into any lower tier covered transaction with a person who is debarred, suspended, declared ineligible, or voluntarily excluded from participation in this covered transaction, unless authorized by the department or agency with which this transaction originated.

6. The prospective lower tier participant further agrees by submitting this proposal that it will include the clause titled "Certification Regarding Debarment, Suspension, Ineligibility, and Voluntary Exclusion--Lower Tier Covered Transactions," without modification, in all lower tier covered transactions and in all solicitations for lower tier covered transactions.

7. A participant in a covered transaction may rely upon a certification of a prospective participant in a lower tier covered transaction that it is not debarred, suspended, ineligible, or voluntarily excluded from the covered transaction, unless it knows that the certification is erroneous. A participant may decide the method and frequency by which it determines the eligibility of its principals. Each participant may, but is not required to, check the Nonprocurement List.

8. Nothing contained in the foregoing shall be construed to require establishment of a system of records in order to render in good faith the certification required by this clause. The knowledge and information of a participant is not required to exceed that which is normally possessed by a prudent person in the ordinary course of business dealings.

9. Except for transactions authorized under paragraph 5 of these instructions, if a participant in a covered transaction knowingly enters into a lower tier covered transaction with a person who is suspended, debarred, ineligible, or voluntarily excluded from participation in this transaction, in addition to other remedies available to the Federal Government, the department or agency with which this transaction originated may pursue available remedies, including suspension and/or debarment.

Certification Regarding Drug-Free Workplace Requirements Grantees Other Than Individuals

This certification is required by the regulations implementing the Drug-Free Workplace Act of 1988, 34 CFR Part 85, Subpart F. The regulations, published in the January 31, 1989 Federal Register, require certification by grantees, prior to award, that they will maintain a drug-free workplace. The certification set out below is a material representation of fact upon which reliance will be placed when the agency determines to award the grant. False certification or violation of the certification shall be grounds for suspension of payments, suspension or termination of grants, or governmentwide suspension or debarment (see 34 CFR Part 85, Sections 85.615 and 85.620).

The grantee certifies that it will provide a drug-free workplace by:

(a) Publishing a statement notifying employees that the unlawful manufacture, distribution, dispensing, possession or use of a controlled substance is prohibited in the grantee's workplace and specifying the actions that will be taken against employees for violation of such prohibition;

(b) Establishing a drug-free awareness program to inform employees about--

(1) The dangers of drug abuse in the workplace;
(2) The grantee's policy of maintaining a drug-free workplace;
(3) Any available drug counseling, rehabilitation, and employee assistance programs; and
(4) The penalties that may be imposed upon employees for drug abuse violations occurring in the workplace;

(c) Making it a requirement that each employee to be engaged in the performance of the grant be given a copy of the statement required by paragraph (a);

(d) Notifying the employee in the statement required by paragraph (a) that, as a condition of employment under the grant, the employee will--

(1) Abide by the terms of the statement; and
(2) Notify the employer of any criminal drug statute conviction for a violation occurring in the workplace no later than five days after such conviction;

(e) Notifying the agency within ten days after receiving notice under subparagraph (d)(2) from an employee or otherwise receiving actual notice of such conviction;

(f) Taking one of the following actions, within 30 days of receiving notice under subparagraph (d)(2), with respect to any employee who is so convicted--

(1) Taking appropriate personnel action against such an employee, up to and including termination; or
(2) Requiring such employee to participate satisfactorily in a drug abuse assistance or rehabilitation program approved for such purposes by a Federal, State, or local health, law enforcement, or other appropriate agency;

(g) Making a good faith effort to continue to maintain a drug-free workplace through implementation of paragraphs (a), (b), (c), (d), (e) and (f).

Organization Name PR/Award Number or Project Name

Name and Title of Authorized Representative

Signature Date

ED 80-0004

Certification Regarding Lobbying For Grants and Cooperative Agreements

Submission of this certification is required by Section 1352, Title 31 of the U.S. Code and is a prerequisite for making or entering into a grant or cooperative agreement over $100,000.

The undersigned certifies, to the best of his or her knowledge and belief, that:

(1) No Federal appropriated funds have been paid or will be paid, by or on behalf of the undersigned, to any person for influencing or attempting to influence an officer or employee of any agency, a Member of Congress, an officer or employee of Congress, or an employee of a Member of Congress in connection with the making of any Federal grant, the entering into of any cooperative agreement, and the extension, continuation, renewal, amendment, or modification of any Federal grant or cooperative agreement.

(2) If any funds other than Federal appropriated funds have been paid or will be paid to any person for influencing or attempting to influence an officer or employee of any agency, a Member of Congress, an officer or employee of Congress, or an employee of a Member of Congress in connection with this Federal grant or cooperative agreement, the undersigned shall complete and submit Standard Form - LLL, 'Disclosure Form to Report Lobbying,' in accordance with its instructions.

(3) The undersigned shall require that the language of this certification be included in the award documents for all subawards at all tiers (including subgrants, contracts under grants and cooperative agreements, and subcontracts) and that all subrecipients shall certify and disclose accordingly.

This certification is a material representation of fact on which the Department of Education relied when it made or entered into this grant or cooperative agreement. Any person who fails to file the required certification shall be subject to a civil penalty of not less than $10,000 and not more than $100,000 for each such failure.

Organization Name

PR/Award (or Application) Number or Project Name

Name and Title of Authorized Representative

Signature

Date

ED 80-0008

12/89

DISCLOSURE OF LOBBYING ACTIVITIES

Approved by OMB
0348-0046

Complete this form to disclose lobbying activities pursuant to 31 U.S.C. 1352
(See reverse for public burden disclosure.)

1. Type of Federal Action:
☐ a. contract
b. grant
c. cooperative agreement
d. loan
e. loan guarantee
f. loan insurance

2. Status of Federal Action:
☐ a. bid/offer/application
b. initial award
c. post-award

3. Report Type:
☐ a. initial filing
b. material change
For Material Change Only:
year _____ quarter _____
date of last report _____

4. Name and Address of Reporting Entity:
☐ Prime ☐ Subawardee
Tier _____, *if known*:

Congressional District, *if known*:

5. If Reporting Entity in No. 4 is Subawardee, Enter Name and Address of Prime:

Congressional District, *if known*:

6. Federal Department/Agency:

7. Federal Program Name/Description:

CFDA Number, *if applicable*: _____

8. Federal Action Number, *if known*:

9. Award Amount, *if known*:
$

10. a. Name and Address of Lobbying Entity *(if individual, last name, first name, MI)*:

b. Individuals Performing Services *(including address if different from No. 10a)* *(last name, first name, MI)*:

(attach Continuation Sheet(s) SF-LLL-A, if necessary)

11. Amount of Payment *(check all that apply)*:
$ _____ ☐ actual ☐ planned

12. Form of Payment *(check all that apply)*:
☐ a. cash
☐ b. in-kind; specify: nature _____
value _____

13. Type of Payment *(check all that apply)*:
☐ a. retainer
☐ b. one-time fee
☐ c. commission
☐ d. contingent fee
☐ e. deferred
☐ f. other; specify: _____

14. Brief Description of Services Performed or to be Performed and Date(s) of Service, including officer(s), employee(s), or Member(s) contacted, for Payment Indicated in Item 11:

(attach Continuation Sheet(s) SF-LLL-A, if necessary)

15. Continuation Sheet(s) SF-LLL-A attached: ☐ Yes ☐ No

16. Information requested through this form is authorized by title 31 U.S.C. section 1352. This disclosure of lobbying activities is a material representation of fact upon which reliance was placed by the tier above when this transaction was made or entered into. This disclosure is required pursuant to 31 U.S.C. 1352. This information will be reported to the Congress semi-annually and will be available for public inspection. Any person who fails to file the required disclosure shall be subject to a civil penalty of not less than $10,000 and not more than $100,000 for each such failure.

Signature: _____
Print Name: _____
Title: _____
Telephone No.: _____ **Date:** _____

Federal Use Only:

Authorized for Local Reproduction
Standard Form - LLL

DISCLOSURE OF LOBBYING ACTIVITIES
CONTINUATION SHEET

Approved by OMB
0348-0046

Reporting Entity: _____ Page _____ of _____

Authorized for Local Reproduction
Standard Form - LLL-A

BILLING CODE 4000-01-C

Instructions for Completion of SF–LLL, Disclosure of Lobbying Activities

This disclosure form shall be completed by the reporting entity, whether subawardee or prime Federal recipient, at the initiation or receipt of a covered Federal action, or a material change to a previous filing, pursuant to title 31 U.S.C. section 1352. The filing of a form is required for each payment or agreement to make payment to any lobbying entity for influencing or attempting to influence an officer or employee of any agency, a Member of Congress, an officer or employee of Congress, or an employee of a Member of Congress in connection with a covered Federal action. Use the SF–LLL–A Continuation Sheet for additional information if the space on the form is inadequate. Complete all items that apply for both the initial filing and material change report. Refer to the implementing guidance published by the Office of Management and Budget for additional information.

1. Identify the type of covered Federal action for which lobbying activity is and/or has been secured to influence the outcome of a covered Federal action.

2. Identify the status of the covered Federal action.

3. Identify the appropriate classification of this report. If this is a followup report caused by a material change to the information previously reported, enter the year and quarter in which the change occurred. Enter the date of the last previously submitted report by this reporting entity for this covered Federal action.

4. Enter the full name, address, city, state and zip code of the reporting entity. Include Congressional District, if known. Check the appropriate classification of the reporting entity that designates if it is, or expects to be, a prime or subaward recipient. Identify the tier of the subawardee, e.g., the first subawardee of the prime is the 1st tier. Subawards include but are not limited to subcontracts, subgrants and contract awards under grants.

5. If the organization filing the report in item 4 checks "Subawardee", then enter the full name, address, city, State and zip code of the prime Federal recipient. Include Congressional District, if known.

6. Enter the name of the Federal agency making the award or loan commitment. Include at least one organizational level below agency name, if known. For example, Department of Transportation, United States Coast Guard.

7. Enter the Federal program name or description for the covered Federal action (item 1). If known, enter the full Catalog of Federal Domestic Assistance (CFDA) number for grants, cooperative agreements, loans, and loan commitments.

8. Enter the most appropriate Federal identifying number available for the Federal action identified in item 1 (e.g., Request for Proposal (RFP) number; Invitation for Bid (IFB) number; grant announcement number; the contract, grant, or loan award number; the application/proposal control number assigned by the Federal agency). Include prefixes, e.g., "RFP–DE–90–001."

9. For a covered Federal action where there has been an award or loan commitment by the Federal agency, enter the Federal amount of the award/loan commitment for the prime entity identified in Item 4 or 5.

10. (a) Enter the full name, address, city, State and zip code of the lobbying entity engaged by the reporting entity identified in item 4 to influence the covered Federal action.

(b) Enter the full names of the individual(s) performing services, and include full address if different from 10 (a). Enter Last Name, First Name, and Middle Initial (MI).

11. Enter the amount of compensation paid or reasonably expected to be paid by the reporting entity (item 4) to the lobbying entity (item 10). Indicate whether the payment has been made (actual) or will be made (planned). Check all boxes that apply. If this is a material change report, enter the cumulative amount of payment made or planned to be made.

12. Check the appropriate box(es). Check all boxes that apply. If payment is made through an in-kind contribution, specify the nature and value of the in-kind payment.

13. Check the appropriate box(es). Check all boxes that apply. If other, specify nature.

14. Provide a specific and detailed description of the services that the lobbyist has performed, or will be expected to perform, and the date(s) of any services rendered. Include all preparatory and related activity, not just time spent in actual contact with Federal officials. Identify the Federal official(s) or employee(s) contacted or the officer(s), employee(s), or Member(s) of Congress that were contacted.

15. Check whether or not a SF–LLL–A Continuation Sheet(s) is attached.

16. The certifying official shall sign and date the form, print his/her name, title, and telephone number.

Public reporting burden for this collection of information is estimated to average 30 minutes per response, including time for reviewing instructions, searching existing data sources, gathering and maintaining the data needed, and completing and reviewing the collection of information. Send comments regarding the burden estimate or any other aspect of this collection of information, including suggestions for reducing this burden, to the Office of Management and Budget, Paperwork Reduction Project (0348–0046), Washington, D.C. 20503.

[FR Doc. 90–10152 Filed 5–1–90; 8:45 am]

BILLING CODE 4000–01–M

federal register

Wednesday
May 2, 1990

Part VI

Department of Health and Human Services

Food and Drug Administration

21 CFR Part 179

Irradiation in the Production, Processing, and Handling of Food; Final Rule

DEPARTMENT OF HEALTH AND HUMAN SERVICES

Food and Drug Administration

21 CFR Part 179

[Docket Nos. 86F-0507 and 86F-0509]

Irradiation in the Production, Processing and Handling of Food

AGENCY: Food and Drug Administration, HHS.

ACTION: Final rule.

SUMMARY: The Food and Drug Administration (FDA) is amending the food additive regulations to provide for the safe use of sources of ionizing radiation for the control of food-borne pathogens in poultry. This action is in response to petitions filed by Radiation Technology, Inc., and the U.S. Department of Agriculture, Food Safety and Inspection Service (FSIS).

DATES: Effective May 2, 1990; written objections and requests for a hearing by June 1, 1990.

ADDRESSES: Written objections may be sent to the Dockets Management Branch (HFA-305), Food and Drug Administration, Rm. 4-62, 5600 Fishers Lane, Rockville, MD 20857.

FOR FURTHER INFORMATION CONTACT: Laura M. Tarantino, Center for Food Safety and Applied Nutrition (HFF-330), Food and Drug Administration, 200 C St. SW., Washington, DC 20204, 202-472-5740.

SUPPLEMENTARY INFORMATION:

Table of Contents

I. Introduction
II. Determination of Safety
III. Data Summary and Evaluation
A. Toxicity Data
1 Toxicity studies submitted in the petition
a Carcinogenicity study in mice
b CIVO rat and dog studies
i Multigeneration study in rats
ii. Chronic rat study
iii. Beagle study
iv. FDA's evaluation of the CIVO studies
2. Other toxicity studies in agency files
a Raltech studies
b Genetic toxicity studies
3 Summary of toxicological findings
B. Microbiological Considerations
1 Efficacy
2. Selective destruction of microorganisms
C. Nutritional Considerations
IV Current Good Manufacturing Practice Considerations
V Labeling
VI. Comment
VII. Conclusions
VIII. References
IX. Objections

I. Introduction

In a notice published in the **Federal Register** of February 20, 1987 (52 FR 5343), FDA announced that a food additive petition (FAP 7M3974) had been filed by the U.S. Department of Agriculture, Food Safety and Inspection Service, Washington, DC 20250, proposing that § 179.26 *Ionizing radiation for the treatment of food* (21 CFR 179.26) be amended to provide for the safe use of sources of ionizing radiation (gamma radiation, electron radiation, and X-radiation) to control food-borne pathogens by reducing the amount of microorganisms, such as *Salmonella*, *Yersinia*, and *Campylobacter*, in poultry products.

In a notice published in the **Federal Register** of March 3, 1987 (52 FR 6391), FDA announced that a food additive petition (FAP 8M3422) had been filed by Radiation Technology, Inc., 108 Lake Denmark Rd., Rockaway, NJ 07866, proposing that § 179.26 be amended to provide for the safe use of a source of gamma radiation to irradiate poultry for the purpose of extending shelf-life and reducing the risk of salmonella poisoning.

In recent years, there has been a heightened awareness of the threat to public health from food-borne illnesses caused by pathogens, and in particular those caused by *Salmonella*, on chicken and other poultry. The subject petitions request that FDA amend the food additive regulations to provide for the use of ionizing radiation to treat fresh or frozen, uncooked poultry to reduce the number of illness-causing microorganisms on the food.

In this final rule, the agency is adding to the authorized uses of ionizing radiation the treatment of fresh or frozen, uncooked poultry products that are: (1) Whole carcasses or disjointed portions of such carcasses that are "ready-to-cook poultry" within the meaning of 9 CFR 381.1(b)(44) or (2) mechanically separated poultry product (a finely comminuted ingredient produced by the mechanical deboning of poultry carcasses or parts of carcasses). The poultry can be irradiated at doses of up to 3 kiloGray (300 kilorad) (one kiloGray (kGy) = 100 kilorad (krad)) for control of food-borne pathogens. The term "poultry," as used in this rule, is defined by FSIS in 9 CFR 381.1(b)(40) (i.e., any domesticated bird, including chickens, turkeys, ducks, geese, or guineas).

II. Determination of Safety

In 1958, Congress amended the Federal Food, Drug, and Cosmetic Act (the act) to prohibit the use of a new food additive until the sponsor establishes its safety, and FDA issues a regulation specifying conditions of safe use. A source of radiation was specifically defined as a food additive in section 201(s) of the act (21 U.S.C. 321(s)).

Under section 409(c)(3)(A) of the act (21 U.S.C. 348(c)(3)(A)), the so-called "general safety clause" of the statute, a food additive cannot be approved for a particular use unless a fair evaluation of the data available to FDA establishes that the additive is safe for that use. The concept of safety embodied in the Food Additives Amendment of 1958 is explained in the legislative history of the provision: "Safety requires proof of a reasonable certainty that no harm will result from the proposed use of an additive. It does not—and cannot—require proof beyond any possible doubt that no harm will result under any conceivable circumstances." (H. Rept. 2284, 85th Cong., 2d Sess. (1958).)

FDA has incorporated this concept of safety into its food additive regulations. Under 21 CFR 170.3(i), a food additive is "safe" is "there is a reasonable certainty in the minds of competent scientists that the substance is not harmful under the intended conditions of use." The agency reviewed the data and studies submitted in the petitions, as well as the entire record in its files relevant to the safety and wholesomeness of poultry treated with ionizing radiation. In addition, several letters were sent to FDA and FSIS in opposition to the FSIS petition. Most of these letters expressed opposition in general terms and urged FSIS to consider alternatives to reduce the levels of *Salmonella* in poultry. They provided no data or rationale, however, on which to deny these petitions. Those letters that addressed a specific issue are discussed below.

III. Data Summary and Evaluation

The agency evaluated: (1) Toxicity studies on irradiated chicken; (2) reports on the efficacy of the process and on the microbiological safety of the product; and (3) studies of the nutritional adequacy of the product.

A. Toxicity Data

1. Toxicity Studies Submitted in the Petition

The following reports of animal feeding studies with irradiated chicken were submitted in petiton FAP 8M3422 to demonstrate safety: An 80-week carcinogenicity study in mice carried out at Bio-Research Laboratories for Atomic Energy of Canada, Ltd., and a series of three feeding studies carried out at Centraal Instituut Voor Voedingsonderzoek (CIVO), The Netherlands. The latter studies consisted of: a multigeneration study in

rats; a chronic study in rats; and a 1-year toxicity study in beagle dogs.

a. *Carcinogenicity study in mice.* The mouse chronic feeding study conducted by Bio-Research Laboratories was reported in summary form. In this study, mice fed diets containing 50 percent by weight of chicken irradiated at 7 kGy (700 krad) or of nonirradiated chicken were compared to mice fed a standard commercial diet or a standard diet containing a known carcinogen. Each experimental group consisted of 100 male and 100 female mice. The authors of the study reported that a variety of internal neoplasms occurred in mice in the control and the experimental groups, but that the incidence and distribution of the tumors in all groups (except that in which the animals were fed a diet containing a known carcinogen) were comparable to values for spontaneously occurring mouse tumors as reported in the literature. The authors stated that "* * * there is nothing in the overall results that suggests a carcinogenetic effect in mice of irradiated chicken."

The agency found that interpretation of this study was confounded by high rates of mortality and autolysis. In addition, in the course of its initial review of this study, the agency noted a discrepancy in the numbers presented in two of the study report tables for the incidence of hepatomas in female mice fed irradiated chicken. Specifically, 11 tumors of this type were reported in one table, although data in a second table were consistent with the occurrence of just one such tumor in this group.

Because the data submitted on this mouse study consisted of a summary report without full detail, and because of the discrepancy concerning the incidence of hepatomas, the agency requested the original microslides and individual animal data from the laboratory where the study was conducted. After receiving this information, the agency found that the slides were no longer readable because the mounting medium had deteriorated, and that the testing laboratory had not conducted a complete histopathologic examination. The discrepancy regarding the number of hepatomas, however, was resolved by a letter from the Director General of the Food Directorate of Health and Welfare, Canada (Ref. 1), which stated that an examination of the raw data confirmed that the discrepancy was the result of a typographical error. The correct figure was verified as one hepatoma, a number not significantly different from the numbers noted for this tumor type in female mice fed the stock diet or non irriadated chicken. The agency finds that statistical analysis of the available data from this study does not raise a concern that irradiated chicken is carcinogenic in mice (Ref. 2). Because of deficiencies in the data, however, the agency is not relying on this study as a primary basis for evaluating the safety of irradiation of poultry.

b. *CIVO rat and dog studies.* The petitioner for FAP 8M3422 also submitted a series of three feeding studies carried out at CIVO.

i. *Multigeneration study in rats.* Rats were fed a control basal diet or a diet containing chicken that had been irradiated at 3 or 6 kGy (300 or 600 krad), or nonirradiated chicken, at a level of 35 percent of the diet. The investigators followed reproductive performance through three successive generations. The authors reported that there were no consistent differences between groups in measured reproduction parameters, such as fertility, number of young per litter, and mortality in utero. Feeding of irradiated chicken did not adversely affect body weight, growth rate, and mortality of offspring.

A 90-day subchronic feeding study was conducted with animals from the second litter of the third generation. The investigators measured body weight, hematologic parameters, and blood and urine chemistry. After sacrifice, gross and microscopic examinations of organs and tissues were carried out. The authors reported that no deaths occurred during the course of the study, and that growth rate, condition, and behavior of the animals were normal. There were no significant changes in blood or urine composition. The authors observed that body weights were increased in the test groups, and that the relative weights of liver and kidneys in male rats fed chicken irradiated at 3 kGy were slightly increased. However, the differences in organ weights were not accompanied by gross or microscopic abnormalities. The authors concluded that chicken irradiated at 3 and 6 kGy "* * * did not evoke any distinct deleterious effects when fed to rats at a dietary level of 35% during four generations."

ii. *Chronic rat study.* A second rat feeding study was conducted at CIVO. In this chronic 2-year study, rats were fed a standard diet or a diet containing nonirradiated or irradiated (3 or 6 kGy) chicken at a level of 35 percent dry matter. Each of the diets was fed to 60 male and 60 female rats. Observations were made of appearance, behavior, mortality, growth, hematologic parameters, and blood and urine chemistries. Extensive gross and microscopic pathological examinations were carried out.

The authors reported no differences among groups in appearance, behavior, mortality, or growth. Hematologic factors and blood and urine chemistries did not show distinct or consistent changes among groups. All abnormalities observed by gross and microscopic examination of tissues were those considered by the investigators to be related to normal aging of rats, and the type and incidence of the changes were comparable in test and control groups. There was no indication that the feeding or irradiated chicken induced neoplasms.

iii. *Beagle study.* In the third CIVO feeding study, beagle dogs were fed a standard diet or a diet containing 35 percent nonirradiated or irradiated (3 to 6 kGy) chicken for 1 year. Each group of dogs consisted of four males and four females. The authors reported that health, survival, appearance, behavior, and growth of the animals were not noticeably affected by inclusion of irradiated chicken in the diet. They found no evidence of abnormalities in hematologic factors, organ weights, or gross and microscopic appearance of organs and tissues and concluded that the feeding of irradiated chicken did not induce any deleterious effects in the dogs.

iv. *FDA's evaluation of the CIVO studies.* Upon evaluation of these feeding studies conducted at CIVO, agency scientists found that the studies appeared to be of high quality and that there was no evidence of adverse effects attributable to consumption of diets containing chicken irradiated at 3 or 6 kGy (Refs. 3 and 4). However, FDA examined the possibility that the addition of ethoxyquin, an antioxidant that was incorporated into the animals' food to inhibit rancidity, could have confounded the interpretation of this series of tests.

The laboratory investigators had noted that lipid peroxide values (a measure of rancidity) increased in chicken as a function of both storage time and irradiation. Thus, the investigators added ethoxyquin to the chicken to prevent development of rancidity in the chicken fat. Ethoxyquin was incorporated into both the control diets and the test diets to control for possible confounding effects. Nonetheless, the agency considered whether ethoxyquin could have decreased the ability of the studies to show a carcinogenic effect because dietary ethoxyquin and other antioxidants have been reported to inhibit the carcinogenic effects of

certain carcinogenic chemicals under some conditions (Ref. 5). The agency also considered the question of whether ethoxyquin might have altered the chemical changes that might occur during the irradiation process.[1]

The agency found that the level of ethoxyquin used in the study (35 parts per million (ppm) of diet) was much lower than the level shown to inhibit chemical carcinogenesis (around 10,000 ppm). Further, agency scientists concluded that ethoxyquin is unlikely to significantly alter the level and kind of radiolytic products because the ethoxyquin was not added to the chicken meat until after irradiation (for further discussion, see Ref. 4). Therefore, the agency concluded that the use of ethoxyquin did not confound the results of these studies.

To ensure that all available data relating to these three feeding studies had been evaluated, the agency requested and received necropsy and histopathology data on the individual animals. Review of these data supported the agency's finding (Refs. 3 and 4) that these studies were well-conducted, and that they provide no evidence of treatment-related adverse toxicological effects (Refs. 6 and 7).

2. Other Toxicity Studies in Agency Files

Even though the studies submitted in the petitions and discussed above were adequate to establish that the irradiation of poultry under the conditions specified in the regulation below does not present a toxicological hazard, the agency also evaluated the other available studies of irradiated chicken in its files.

a. *Raltech studies.* A series of U.S. Department of Agriculture-sponsored studies using chicken sterilized by irradiation was conducted by Raltech Scientific Services. The studies included a chronic feeding study in mice, a chronic feeding study in dogs, teratology studies in four species, a dominant lethal test in mice, a sex-linked recessive test in *Drosophila melanogaster*, and an Ames mutagenicity test. (Reports of these studies are available through the National Technical Information Service (see 49 FR 40623; October 17, 1984).) The Raltech studies were carried out with chicken that had been thermally processed to inactivate enzymes, cooled to approximately −40 °C, and irradiated in the frozen state in the absence of air at doses ranging from 45 to 59 kGy, some 15 to 20 times the maximum dose at issue in this rulemaking.

The agency discussed the findings of, and its conclusions regarding, the Raltech chronic feeding studies in mice and dogs, an incomplete study in rats, and the sex-linked recessive study in *Drosophila* in its recent decisions on irradiated foods on April 18, 1986 (51 FR 13376 at 13386), and December 30, 1988 (53 FR 53176 at 53188 through 53189). (See also Ref. 8.) Those discussions are incorporated herein.[2]

The teratology studies conducted at Raltech showed that feeding irradiated chicken to hamsters, rabbits, rats, and mice did not result in teratogenic effects in offspring. The agency's review found that the first three of these studies were of good quality. The agency stated that the study in mice, although negative, was of limited value because of procedural flaws in recording the data (Ref. 8).

The dominant lethal test in mice did not show adverse effects in animals fed irradiated chicken; however, FDA considered that study to be unsuitable for supporting safety because the positive control also produced negative results (Ref. 8). FDA found that the Ames mutagenicity test was well-conducted and provided no evidence of mutagenicity of irradiated chicken (Ref. 8).

The agency found no evidence in any of the Raltech studies of adverse effects that could be attributed to irradiation of chicken at doses of up to 59 kGy (Ref. 8). Because of differences in irradiation conditions, the radiation-sterilized chicken used in these studies does not model the changes that would be expected in chicken irradiated unfrozen and in the presence of air. Therefore, FDA is not relying on these studies as a primary basis for a safety evaluation. However, the agency finds that the lack of treatment-related adverse effects in the Raltech studies is consistent with the agency's conclusion that chicken irradiated at 3 kGy does not present a toxicological hazard.

b. *Genetic toxicity studies.* The agency also reviewed several in vitro and in vivo mutagenesis and genetic toxicity studies with irradiated chicken that were carried out at the Federal Research Centre for Nutrition, Karlsruhe, Federal Republic of Germany. These included: a reverse mutation test in *Salmonella typhimurium*; a sister chromatid exchange and hypoxanthine-guanine phosphoribosyl transferase mutation assay in cultured Chinese hamster ovary cells; and a micronucleus test, bone marrow sister chromatid exchange, and sister chromatid exchange in spermatogonia, all in rodents. The investigators reported that chicken irradiated at 7 kGy was not mutagenic in these tests.

The agency found that the tests in rodents (i.e., bone marrow micronucleus tests in rats, mice, and hamsters; sister chromatid exchange in bone marrow cells of mice and hamsters; and sister chromatid exchange in spermatogonia of mice) showed that animals fed irradiated chicken had numbers of micronuclei or sister chromatid exchanges in the tissues examined comparable to those fed nonirradiated chicken. The agency found that these studies demonstrate the lack of mutagenic effects from the irradiated chicken diet (Ref. 8).

Agency scientists noted that methodological deficiencies in the other

[1] In 1982, FDA reviewed all available toxicological studies with irradiated food. The agency concluded that the data were inadequate to support a decision that all foods may be irradiated safely at doses up to 10 kGy (see 51 FR 13376 at 13378 and 13394; April 18, 1986). Agency scientists concluded at that time that the reports of the CIVO studies were not completely acceptable for evaluating the safety of all foods irradiated at doses of up to 10 kGy because of a reservation about the use of ethoxyquin. The agency had not yet made its determination, which is set forth infra, about the significance of the use of this substance

[2] Briefly, the agency responded to comments and objections alleging that several of the Raltech studies showed adverse toxicological effects attributable to the feeding of radiation-sterilized chicken. Specifically, the comments and objections raised questions concerning the mutagenicity test in *Drosophila* and feeding studies in mice, dogs, and rats.

There was no evidence that radiation-sterilized chicken is mutagenic in the sex-lined recessive lethal study in *Drosophila*. The agency addressed an observation in this study of decreased numbers of offspring in groups raised on irradiated chicken meat. The agency noted that decreased numbers of offspring also occurred in those groups fed nonirradiated chicken, compared to those fed a control diet, and found that there was no evidence to show that radiation sterilization of chicken caused adverse reproductive effects in this test.

The agency also considered whether the Raltech feeding study in mice showed a treatment-related increase in testicular tumors. Agency scientists examined the histopathology slides from this study. The data were also referred to the National Toxicology Program s (NTP) Board of Scientific Counselors for peer review. FDA and NTP pathologists agreed that the evidence did not show a treatment-related induction of testicular tumors.

With regard to the Raltech dogs feeding study, the agency considered a comment that male dogs fed irradiated chicken had lower body weights than dogs fed frozen chicken. The agency noted, however, that the amount of food made available to the dogs was manipulated to obtain "ideal" body weights and concluded that any difference in body weights was not the result of radiation treatment.

Finally, the agency considered an objection that pointed to the fact that a chronic feeding study in rats was not completed. The rat feeding study was not completed because of lactation failure in parent females in all diet groups, including control groups. Thus, this study was not evaluated by the agency. The authors of the study reported that there was no evidence of toxicity from the test diets during the 9 months of the test.

studies limited their usefulness; however, these scientists found no evidence in any of these studies that indicated that irradiated chicken was mutagenic (Ref. 8).

3. Summary of Toxicological Findings

The agency has carefully reviewed the studies submitted with the petitions and the other available data and studies in its files on the toxicological effects of irradiated chicken. Adverse effects that were attributable to the consumption of irradiated chicken were not produced in any of these studies. While, as noted above, the agency found certain deficiencies in some of the studies, the agency concludes, based on all the evidence before it, that the irradiation of poultry at the petitioned level of up to 3 kGy does not present a toxicological hazard.[3]

B. Microbiological Considerations

1. Efficacy

The petitioners provided several reports and published papers describing the effectiveness of low-dose irradiation in reducing the number of microorganisms on poultry and other foods. For example, a number of reports submitted in the petitions point out that the radiation dose necessary to reduce the initial population of *Salmonella* by 90 percent (i.e., the D value) ranges from less than 0.5 kGy to approximately 1 kGy depending on such factors as the strain and the temperature at which irradiation is carried out (see, e.g., Ref. 10 for D values obtained under various conditions). Other microorganisms of potential public health significance, specifically *Yersinia* and *Campylobacter*, are even more radiation-sensitive than *Salmonella* (Refs. 11 and 12).

The agency has reviewed these as well as other published data and finds that irradiation at doses of up to 3 kGy (300 krad) is effective in lowering the burden of microorganisms in poultry. In particular, irradiation at these doses is effective in reducing the numbers of such food-borne pathogens as *Salmonella, Yersinia*, and *Campylobacter* (Ref. 13).

2. Selective Destruction of Microorganisms

The doses of radiation requested in these petitions do not sterilize the food. Thus, poultry treated in this way would require refrigeration and proper handling by the retailer and consumer to inhibit multiplication of surviving organisms. While irradiation at a dose of 3 kGy reduces the number of many pathogenic and spoilage bacteria, it does not eliminate the relatively radiation-resistant spore-forming bacteria such as *Clostridium botulinum*. *C. botulinum*, however, does not ordinarily grow and produce toxin under the refrigeration conditions that should be used to store fresh poultry. Nevertheless, the agency considered whether *C. botulinum* could grow and produce toxin without the signs of spoilage familiar to the consumer if proper temperature control were not maintained.

FDA reviewed studies in which chicken skins were inoculated with large numbers of *C. botulinum*, irradiated, and stored at a temperature of 10 °C, to model poor refrigeration conditions, and 30 °C, to model a severe abuse temperature. These conditions were chosen to provide a worst-case scenario that would result in a much greater burden of toxin than would be expected under normal conditions.

In one series of studies (Refs. 14 to 16), chicken skins were inoculated with *C. botulinum* Type E, irradiated, incubated at 10 °C or 30 °C, and checked daily for off-odors indicative of spoilage and for toxin production.[4] The authors noted that irradiation appeared to injure spores of *C. botulinum* because spores on chicken skins irradiated at 3 kGy and held at 10 °C did not produce toxin at any time in the period studied, whereas toxin was produce on the nonirradiated chicken. After storage at 30 °C, toxin was produced on both irradiated and nonirradiated chicken. However, under all storage conditions, even those most favorable to toxin production, the natural flora surviving 3 kGy irradiation produced off-odors characteristic of spoilage before toxin was observed.

Another study examined the effect of 3 kGy irradiation on the growth of, and toxin production by, *C. botulinum* Types A and B on chicken skins (Ref. 17). The investigators reported that toxin was not formed from these varieties when the chicken was stored at 10 °C, whether irradiated or not. At the abuse temperature of 30 °C, toxin was formed in both irradiated and nonirradiated chicken, but toxin formation was delayed in the chicken subjected to irradiation. In this case also, the natural flora multiplied and produced an off-odor indicative of spoilage by the time samples became toxic.

Thus, these studies show that enough of the normal flora survives in poultry irradiated at 3 kGy (300 krad) that *C. botulinum*, if present, would not render the product toxic before the normal signs of spoilage became evident. Based on this evidence, the agency concludes that irradiation of poultry at 3 kGy does not result in any additional health hazard from *C. botulinum* (Ref. 13).

A letter to the agency contended that the irradiation process can accelerate the growth of *C. botulinum* at doses above 1 kGy (100 krad) and submitted copies of three reports on the irradiation of chicken skins inoculated with *C. botulinum* Type E.

The reports submitted with the comment were those discussed above (Refs. 14 to 16) that showed that no toxin was detected in the irradiated chicken before it spoiled. One of these reports (Ref. 16) described injury to *C. botulinum* spores caused by irradiation at doses of 1 to 4 kGy (100 to 400 krad), as well as repair of such injury. The other two reports (Refs. 14 and 15) concluded that: (1) No toxin was detected before spoilage occurred in chicken irradiated at a dose of 3 kGy, and (2) natural surviving microflora grew faster than *C. botulinum* spores. Thus, contrary to the assertion in the letter, these studies demonstrate that irradiation of chicken at a dose of 3 kGy or less will not result in any additional health hazard from *C. botulinum* Type E. As discussed above, comparable studies have also been conducted with *C. botulinum* Types A and B.

The FSIS petition requested that the packaging used for irradiated chicken be restricted to materials that are oxygen permeable. Packaging and storage of chicken under anaerobic conditions, such as vacuum or modified atmosphere packaging, can extend shelf-life by inhibiting outgrowth of aerobic spoilage

[3] In 1979, FDA established the Bureau of Foods Irradiated Food Committee (BFIFC) to review the existing agency policy concerning irradiation of foods (Ref. 9). BFIFC was charged to recommend "toxicologic [testing] requirements appropriate for assessing the safety of irradiated food * * *" BFIFC concluded that foods irradiated at doses above 1 kGy and comprising more than 0.01 percent of the diet warrant toxicologic evaluation. BFIFC recommended that foods irradiated at doses above 1 kGy be evaluated using a battery of mutagenicity tests, as well as 90-day feeding studies in two species (one rodent, one nonrodent), and that the rodent test include in utero exposure.

Among the studies of irradiated chicken that were evaluated by the agency were a battery of in vivo mutagenicity tests that FDA determined to be adequate to demonstrate safety In addition, FDA reviewed a multigeneration study in rats (including a 90-day subchronic feeding study), a chronic carcinogenicity study in rats, and a 1 year feeding study in dogs and found them to be adequate to demonstrate the toxicological safety of the use of irradiation on poultry at the dose levels at issue in this regulation

[4] Although *C. botulinum* Type E is associated primarily with marine products, its response to radiation was studied because chickens may be fed fish meal containing *C. botulinum* Type E, and thus it is conceivable that the intestinal tract of poultry may contain these organisms. Further, *C. botulinum* Type E will multiply and produce toxin at lower temperatures than other types of *C. botulinum*.

microorganisms, but it can also provide conditions conducive to growth of *C. botulinum*. The agency notes that the studies cited above examined *C. botulinum* toxin production and spoilage in chicken incubated both aerobically and anaerobically and found that spoilage preceded toxin production even in chicken incubated anaerobically. Use of air-permeable packaging materials does, however, provide an extra margin of safety. Because the petitioner requested that only air-permeable packaging be permitted, FDA is including a provision in the regulation that packaging used shall not exclude oxygen.

C. Nutritional Considerations

FDA reviewed data to determine whether irradiation of poultry would have an adverse effect on the nutritional value of the food. One study submitted in FAP 8M3422, carried out at CIVO, examined the composition and nutritive value of chicken irradiated at a dose of 3 or 6 kGy (300 or 600 krad), as compared to a nonirradiated control. Batches of irradiated and nonirradiated chicken were refrigerated for 3 to 7 days, cooked, and homogenized. Samples were then analyzed for general composition and content of nutrients, including vitamins. The investigators also performed bioassays of protein utilization and digestibility in weanling rats.

The authors reported that vitamin content showed considerable variation both between different batches of chicken and between different treatments of the same batch. They reported that there was, however, no distinct effect of irradiation on vitamin content, with the possible exception of a slight decrease in vitamin B_1 (thiamin) at a dose of 6 kGy (twice as high as the maximum does under consideration in this rulemaking). They also reported that determinations of the digestibility and of the utilization of the chicken protein for growth and synthesis of body protein revealed that irradiation did not decrease the nutritive value of protein in weanling rats.

The agency has also received reports of a study conducted at the U.S. Department of Agriculture on the effects of irradiation on nutrients in chicken and pork (Refs. 18 and 19). The authors reported that the levels of niacin and riboflavin did not change significantly with radiation doses of up to 7 kGy in samples of chicken that had been irradiated and then cooked, when compared to control samples that had only been cooked. The loss of thiamin in chicken irradiated in an air-permeable package at 0 °C at a dose of 3 kGy was 9 percent (Ref. 19). The authors of this study considered the effect on the dietary intake of thiamin if all chicken and turkey consumed were irradiated at 3 kGy and estimated that the maximal loss of thiamin in the diet would be 0.076 percent (Ref. 18).

After reviewing these reports and the studies submitted in the petitions in which irradiated chicken was fed to laboratory animals, FDA concludes that the data show that irradiation at the doses used does not have a deleterious effect on the levels or the bioavailability of the nutrients in chicken (Refs. 20 to 22).

One letter to the agency suggested that studies on vitamin losses in irradiated chicken should include comparisons of immediate losses, losses from storage, and losses from cooking.

The analysis of vitamins in the CIVO study discussed above was performed on chicken that had been stored in a refrigerator and cooked, and the USDA study (Ref. 18) explicitly considered the effect of irradiation on vitamin content in both raw and cooked chicken. Thus, FDA has considered the factors cited by the comment and has found no evidence of significant vitamin loss in chicken irradiated to a maximum dose of 3 kGy. The agency therefore concludes that irradiation of poultry at doses of up to 3 kGy will not have an adverse impact on the nutritional value of a person's diet.

IV. Current Good Manufacturing Practice Considerations

FDA has established general provisions defining current good manufacturing practice for the use of irradiation in the treatment of food in § 179.25 (21 CFR 179.25). This regulation discusses requirements such as recordkeeping and the need for a scheduled process for food irradiation. Section 179.25(b) states that: "Food treated with ionizing radiation shall receive the minimum radiation dose reasonably required to accomplish its intended effect * * *." Section 179.25(c) states that: "Packaging materials subjected to irradiation incidental to the radiation treatment and processing of prepackaged foods shall comply with § 179.45."

FSIS, in its petition, requested that FDA establish a minimum dose of 150 krad (1.5 kGy) for the irradiation of poultry and also requested that FDA require that poultry that is to be irradiated be prepackaged.

The minimum dose needed to control pathogenic organisms on poultry can vary with the particular microorganism and with the microbial burden on the food. The need for packaging before application of radiation also may vary with the intended effect of the treatment and the conditions of application. FSIS, based on its regulatory authority over operation of poultry processing plants, can establish specific packaging requirements and a mimimum dose, consistent with current good manufacturing practice, for controlling pathogenic organisms in such plants. FDA concludes that FSIS should be free to do so without having to submit a new petition for an amendment to the regulation as long as any requirements comply with 21 CFR 179.25 and 179.26. Therefore, the regulation set forth below does not establish specific requirements for packaging or for a minimum dose.

V. Labeling

Food irradiated under the conditions of the regulation set forth below must be labeled as required by § 179.26(c) (21 CFR 179.26(c)). In addition, because poultry is also subject to regulation by FSIS, the labeling of poultry irradiated under the conditions of this regulation must comply with any requirements imposed by that agency under its authority to approve labeling of meat and poultry.

VI. Comment

The agency received a letter from two state legislators, dated February 22, 1988 (Ref. 23), asking FDA to deny these petitions and to rescind all regulations permitting sale of irradiated food. This request was based on the legislators' understanding: (1) That benzene is formed in all food when it is irradiated, and (2) that the Delaney Clause of the Federal Food, Drug, and Cosmetic Act prohibits the use of any food additive that is carcinogenic, regardless of the level at which it is present in food.

This letter did not provide any evidence that benzene is formed by irradiation of poultry at a dose of 3 kGy (300 krad) or less, or that if it is formed, it could be expected to be present in amounts that would pose a risk to consumers. FDA denied this request by a letter dated May 2, 1988 (Refs. 24 and 25), because there is no basis for concluding that benzene would be formed in irradiated poultry in toxicologically significant amounts, and because the Delaney Clause applies only to additives, not to impurities that may result in insignificant amounts from the use of additives. The request provided no evidence that increased concentrations of benzene have been, or could be, detected in poultry irradiated at a dose of 3 kGy or less. No further information was submitted to FDA after it denied this request. Therefore, the

request provided no basis for denying these petitions.

Moreover, FDA discussed the possible formation of benzene in its response to objections to FDA's earlier decisions to permit other applications of radiation in food (53 FR 53176 at 53197; December 30, 1988). In that document FDA discussed data demonstrating that very low concentrations of benzene (19 parts per billion) were produced by high dose (56 kGy) radiation sterilization of beef. FDA noted that an analysis by expert scientists found that such low concentrations were of trivial health concern, and that other foods irradiated at lower doses would present even less reason for concern (53 FR 53197).

VII. Conclusions

FDA has evaluated the information submitted in the petitions and other relevent material in its files. Based on these data, the agency concludes that the proposed use of ionizing radiation is safe, and that the regulations should be amended in 21 CFR 179.26(b) as set forth below. The agency is also making minor editorial changes in § 179.26(b) by numbering the entries and by spelling out in full the units of radiation dose.

In accordance with § 171.1(h) (21 CFR 171.1(h)), the petitions and the documents that FDA considered and relied upon in reaching its decision to approve the petitions are available for inspection at the Center for Food Safety and Applied Nutrition by appointment with the information contact person listed above. As provided in 21 CFR 171.1(h), the agency will delete from the documents any materials that are not available for public disclosure before making the documents available for inspection.

The agency has carefully considered the potential environmental effects of this action. FDA had concluded that the action will not have a significant impact on the human environment, and that an environmental impact statement is not required. The agency's finding of no significant impact and the evidence supporting that finding, contained in an environmental assessment, may be seen in the Dockets Management Branch (address above) between 9 a.m. and 4 p.m., Monday through Friday.

VIII. References

The following references have been placed on display in the Dockets Management Branch (address above) and may be seen by interested persons between 9 a.m. and 4 p.m., Monday through Friday.

1. Letter dated January 9, 1987, from S.W Gunner, Health and Welfare, Canada, to Sanford A Miller, FDA.

2. Memorandum dated June 16, 1987, from J.A. Springer, FDA, to W. G. Flamm, FDA.

3. Memorandum dated August 7, 1985, from C. Kokoski, FDA, to C. Takeguchi, FDA.

4. Memorandum of meeting dated August 22, 1985, CFSAN Cancer Assessment Committee.

5. Wattenberg, L.W., "Inhibition of Chemical Carcinogenesis," *Journal of the National Cancer Institute*, 60:11, 1978.

6. Memorandum dated February 11, 1986, from H. Irausquin, FDA, to H. Blumenthal, FDA.

7. Memorandum dated July 14, 1986, from H. Irausquin, FDA, to C. Takeguchi, FDA.

8. Memorandum dated December 14, 1988, from H. Irausqui, FDA, to G. Pauli, FDA.

9. Brunetti, A.P. et al., "Recommendations for Evaluating the Safety of Irradiated Foods," final report prepared for the Director, Bureau of Foods, FDA, July 1980.

10. Mulder, R.W.A.W., "*Salmonella* Radicidation of Poultry Carcasses," Report 363, Spelderholt Institute for Poultry Research, Beekbergen, The Netherlands, 1982.

11. El-Zawahry, Y.A., and D.B. Rowley, "Radiation Resistance and Injury of *Yersinia enterocolitica*," *Applied and Environmental Microbiology*, 37:50, 1979.

12. Lambert, J.D., and R.B. Maxcy, "Effects of Gamma Radiation on *Campylobacter jejuni*," *Journal of Food Science*, 49:665, 1984.

13. Memorandum dated September 21, 1988, from D.A. Kautter, FDA, to C. Takeguchi, FDA.

14. Firstenberg-Eden, R., D.B. Rowley, and G.E. Shattuck, "Factors Affecting Growth and Toxin Production by *Clostridium botulinum* Type E on Irradiated (0.3 Mrad) Chicken Skins," *Journal of Food Science*, 47:887, 1982.

15. Firstenberg-Eden, R., D.B. Rowley, and G.E. Shattuck, "Competitive Growth of Chicken Skin Microflora and *Clostridium botulinum* Type E after an Irradiation Dose of 0.3 Mrad," *Journal of Food Protection*, 46:12, 1983.

16. Rowley, D.B., R. Firstenberg-Eden, and G.E. Shattuck, "Radiation-Injured *Clostridium botulinum* Type E Spores: Outgrowth and Repair," *Journal of Food Science*, 48:1829, 1983.

17. Dezfulian M., and J.G. Bartlett, "Effect of Irradiation on Growth and Toxigenicity of *Clostridium botulinum* Types A and B Inoculated onto Chicken Skins," *Applied and Environmental Microbiology*, 53:201, 1987

18. Fox, J.B., Jr., et al., "Effect of Gamma Irradiation on the B Vitamins of Pork Chops and Chicken Breasts" *International Journal of Radiation Biology*, 55:689, 1989.

19. Anonymous, "Status of Food Safety and Inspection Service Irradiation Activities," U.S. Department of Agriculture, Food Safety and Inspection Service, September 1988.

20. Memorandum dated April 2, 1979, from J.E. Vanderveen, FDA, to Petition Control Branch, FDA.

21 Memorandum dated May 17, 1988, from J.T. Tanner, FDA, to C. Takeguchi, FDA.

22. Memorandum dated February 16, 1989, from J.T. Tanner, FDA, to A. Dennis, FDA.

23. Letter dated February 22, 1988, from J.V Kelly, and J.H. Dorsey, New Jersey State Legislature, to Frank Young, FDA.

24. Letter dated May 2, 1988, from F Young, FDA, to J.V. Kelly, New Jersey State Legislature.

25. Letter dated May 2, 1988, from F. Young, FDA, to J.H. Dorsey, New Jersey State Legislature.

IX. Objections

Any person who will be adversely affected by this regulation may at any time on or before June 1, 1990, file with the Dockets Management Branch (address above) written objections thereto. Each objection shall be separately numbered, and each numbered objection shall specify with particularity the provisions of the regulation to which objection is made and the grounds for the objection. Each numbered objection on which a hearing is requested shall specifically so state. Failure to request a hearing for any particular objection shall constitute a waiver of the right to a hearing on that objection. Each numbered objection for which a hearing is requested shall include a detailed description and analysis of the specific factual information intended to be presented in support of the objection in the event that a hearing is held. Failure to include such a description and analysis for any particular objection shall constitute a waiver of the right to a hearing on the objection. Three copies of all documents shall be submitted and shall be identified with the docket number found in brackets in the heading of this document. Any objections received in response to the regulation may be seen in the Dockets Management Branch between 9 a.m. and 4 p.m., Monday through Friday.

List of Subjects in 21 CFR Part 179

Food additives, Food labeling, Food packaging, Radiation protection, Reporting and recordkeeping requirements, Signs and symbols.

Therefore, under the Federal Food, Drug, and Cosmetic Act and under authority delegated to the Commissioner of Food and Drugs, 21 CFR part 179 is amended as follows:

PART 179—IRRADIATION IN THE PRODUCTION, PROCESSING AND HANDLING OF FOOD

1. The authority citation for 21 CFR part 179 continues to read as follows:

Authority: Secs. 201, 402, 403, 409, 703, 704 of the Federal Food, Drug, and Cosmetic Act (21 U.S.C. 321, 342, 343, 348, 373, 374).

2. Section 179.26 is amended by revising the table in paragraph (b) to read as follows:

§ 179.26 Ionizing radiation for the treatment of food.

* * * * *

(b) * * *

Use	Limitations
1 For control of *Trichinella spiralis* in pork carcasses or fresh, non-heat-processed cuts of pork carcasses.	Minimum dose 0.3 kiloGray (kGy) (30 kilorad (krad)); maximum dose not to exceed 1 kGy (100 krad).
2. For growth and maturation inhibition of fresh foods.	Not to exceed 1 kGy (100 krad).
3. For disinfestation of arthropod pests in food.	Do.
4. For microbial disinfection of dry or dehydrated enzyme preparations (including immobilized enzymes).	Not to exceed 10 kGy (1 megarad (Mrad)).
5. For microbial disinfection of the following dry or dehydrated aromatic vegetable substances when used as ingredients in small amounts solely for flavoring or aroma: culinary herbs, seeds, spices, vegetable seasonings that are used to impart flavor but that are not either represented as, or appear to be, a vegetable that is eaten for its own sake, and blends of these aromatic vegetable substances. Turmeric and paprika may also be irradiated when they are to be used as color additives. The blends may contain sodium chloride and minor amounts of dry food ingredients ordinarily used in such blends.	Not to exceed 30 kGy (3 Mrad).
6. For control of foodborne pathogens in fresh or frozen, uncooked poultry products that are: (1) Whole carcasses or disjointed portions of such carcasses that are "ready-to-cook poultry" within the meaning of 9 CFR 381.1(b)(44), or (2) mechanically separated poultry product (a finely comminuted ingredient produced by the mechanical deboning of poultry carcasses or parts of carcasses).	Not to exceed 3 kGy (300 krad); any packaging used shall not exclude oxygen.

* * * * *

Dated: April 3, 1990.

Alan L. Hoeting,

Acting Associate Commissioner for Regulatory Affairs.

[FR Doc. 90–10113 Filed 5–1–90; 8:45 am]

BILLING CODE 4160–07–M

federal register

Wednesday
May 2, 1990

Part VII

Department of Transportation

Research and Special Programs Administration

49 CFR Parts 174, 175, and 177
Revision to Modal Regulations; Notice of Proposed Rulemaking

DEPARTMENT OF TRANSPORTATION

49 CFR Parts 174, 175, and 177

[Docket No. HM-181B, Notice No. 90-4]

RIN 2137-AB87

Revisions to Modal Regulations

AGENCY: Research and Special Programs Administration (RSPA), Department of Transportation (DOT).

ACTION: Notice of proposed rulemaking.

SUMMARY: RSPA is proposing revisions to the carrier requirements in 49 CFR parts 174, 175, and 177 of the Hazardous Materials Regulations (HMR) for consistency with a previously published proposed rule, Docket HM-181, Notice 87-4 (52 FR 42772, November 6, 1987), and the International Civil Aviation Organization's (ICAO) Technical Instructions for the Safe Transport of Dangerous Goods by Air. The proposals contained in Docket HM-181, Notice No. 87-4, addressed hazard classification, packaging, and hazard communication. Revisions to modal requirements were not addressed. The intended effect of the revisions proposed herein is to align the current rail, air, and highway requirements in parts 174, 175, and 177 with the proposals previously addressed in Docket HM-181, Notice 87-4. If Docket HM-181 is promulgated in a final rule without corresponding revisions to parts 174, 175, and 177, the ensuing confusion could result in erroneous and uncoordinated application of the modal requirements. This action is necessary to provide for the acceptance and transportation of hazardous materials in a consistent manner.

DATES: Comments must be received on or before July 16, 1990.

ADDRESSES: Address comments to Dockets Unit (DHM-30), Office of Hazardous Materials Transportation, RSPA, U.S. Department of Transportation, Washington, DC 20590-0001. Comments should identify the docket and notice number and be submitted, when possible, in five copies. Persons wishing to receive confirmation of receipt of their comments should include a self-addressed, stamped postcard. The Dockets Unit is located in Room 8419 of the Nassif Building, 400 Seventh Street SW., Washington, DC 20590-0001. Office hours are 8:30 am to 5:00 pm Monday through Friday, except public holidays.

FOR FURTHER INFORMATION CONTACT: Beth Romo or Ray Gassaway, Standards Division, Telephone: (202) 366-4488. Office of Hazardous Materials Transportation, 400 Seventh Street SW., Washington, DC 20590-0001.

SUPPLEMENTARY INFORMATION:

I. Background

On May 5, 1987, RSPA (Research and Special Programs Administration) published a notice of proposed rulemaking (NPRM) (Docket No. HM-181; Notice 87-4) in the **Federal Register** (52 FR 16482) proposing sweeping changes to the HMR (Hazardous Materials Regulations), including the adoption of performance-oriented packaging standards and changes in hazard communication, hazard classification and bulk packaging requirements. The proposed regulatory text of Docket No. HM-181, Notice 87-4, was republished in its entirety on November 6, 1987 (52 FR 42772), in order to make certain corrections and to supplement certain of the proposals contained in the May 5, 1987 publication. Please refer to HM-181, Notice 87-4, for additional background information. RSPA also published in the **Federal Register** under Docket No. HM-181, Notice 87-4, two supplemental NPRMs (Notice 88-7, 53 FR 45868, published November 14, 1988 and Notice 89-5, 54 FR 31158, published July 26, 1989) addressing the classification of gases which are toxic by inhalation.

It has been RSPA's intent to develop complementary rulemakings for each transportation mode in order to harmonize current requirements for the acceptance and transportation of hazardous materials with those proposals set forth in HM-181, Notice 87-4. In this notice, RSPA is proposing to amend parts 174, 175, and 177 by specifying both international and DOT equivalency for hazard classes (international numeric class and division number and the corresponding DOT hazard class), quantities (metric measures and U.S. standard unit equivalents), packagings (packing groups and DOT specifications), and by making certain other conforming changes, such as in section references, to correspond with changes proposed under HM-181, Notice 87-4. We are not proposing in this document to amend 49 CFR part 176, Carriage by Vessel. Revisions to part 176 will be addressed in a forthcoming document which will include the consolidation of requirements for transporting explosives by vessel.

In this notice, we are proposing to amend the Segregation and Separation Charts set forth in §§ 174.81(d) and 177.848(d) for the carriage of hazardous materials by rail and public highway, respectively. The proposed revisions would be parallel for both surface modes and consistent with the provisions in the International Maritime Dangerous Goods (IMDG) Code and the U.N. Recommendations on the Transport of Dangerous Goods. A new explosives loading and storage table would be added to §§ 174.81 and 177.848 for use when different classification groups of Class 1 (explosive) materials are transported in the same rail car or transport vehicle. An explanation of compatibility groups and classification codes can be found in Table 4.1 of the United Nations Recommendations on the Transport of Dangerous Goods, sixth revised edition.

The proposals in this notice are, for the most part, non-substantive changes to parts 174, 175, and 177. These revisions would incorporate U.N. hazard class and division numbers, metric measures, packaging provisions, and section references. For example, many of the changes proposed in this document entail replacing the existing DOT hazard class (e.g., flammable liquid) with both the new hazard class nomenclature and the current DOT hazard class (e.g., Class 3 (flammable liquid) material). The intent of this proposed action is to provide uniformity and conformance with international standards in a manner consistent with the proposals set forth in HM-181, Notice 87-4. The changes proposed in this notice to amend the modal requirements in parts 174, 175, and 177 would be incorporated into any final rule promulgated under Docket HM-181 The following is a section-by-section summary of the proposed amendments:

Part 174—Carriage by Rail

Throughout 49 CFR part 174, RSPA is proposing to add the international numeric hazard class and division number where appropriate to conform with proposed adoption of the U.N. Recommendations. Metric measures and placard names, as proposed in Docket HM-181, Notice 87-4 (52 FR 42772), would be added to appropriate sections of the part. Other revisions to the part would be as follows:

Section 174.25. The table specifying placard notations and endorsements would be revised for clarity and to include the international numeric hazard class and division numbers. In addition, placard names, as proposed in Docket HM-181, Notice 87-4, would be incorporated.

Section 174.81. The section would be retitled "Segregation of Hazardous Materials". The introductory language and the segregation table in existing § 174.81 would be revised and set forth

in proposed paragraph (d). Paragraph (a) would be removed because the separation of Class 8 (corrosive) materials and Division 1.1 or 1.2 (explosive) materials would be addressed in the proposed segregation table. A new paragraph (a) would be added to provide a statement of the applicability of the section. Current paragraph (b) would be revised and redesignated paragraph (c) to include existing provisions from § 177.848(b), but without the phrase "or any other acidic materials which could release hydrocyanic acid from cyanides", as it is believed any commingling of cyanides or cyanide mixtures with acids or other acidic materials will release hydrocyanic acids. Current paragraph (c) would be removed because the existing requirement would be addressed in the proposed compatibility table for Class 1 (explosive) materials in proposed paragraph (f). Current paragraph (d) would be removed as carboys would no longer be an authorized non-bulk packaging under the provisions of Docket HM–181, Notice 87–4. Paragraph (e) would be removed as provisions regulating smokeless powder for small arms, transported by rail or highway, are addressed in proposed § 173.171 of Docket HM–181, Notice 87–4. Paragraph (f) would be redesignated paragraph (d). A new paragraph (f) would introduce the compatibility table for Class 1 (explosive) materials.

The segregation table instructions would be revised to clarify that its provisions also apply to materials held in storage facilities during the course of transportation. The segregation table would be revised by replacing proper shipping names with U.N. hazard classes or divisions. Segregation of hazardous materials would be required where the letter "X" is located at the intersection of two hazard classes or divisions. The reader will find an index to hazard class definitions in HM–181, Notice 87–4 (52 FR 42772 at 42949). The letter "O" would be added to the instructions and segregation table to indicate separation of classes and divisions of hazardous materials by a minimum distance of 1.2 m or 4 feet in any direction to enhance transportation safety. Segregation of Class 8 (corrosive) liquids from Class 1 (explosive) materials would be addressed in the proposed segregation table. Comments specifically addressing this proposed revision are welcome. An "*" would be added to the segregation table to indicate that segregation among different Class 1 (explosive) materials would be governed by the compatibility table in paragraph (f) of this section.

Division 1.6 (extremely insensitive explosive) materials and Division 6.1 (poisonous liquids; packing group I only) materials would be added to the segregation table in accordance with the IMDG Code. Segregation of Division 1.6 (extremely insensitive explosive) materials from other Class 1 (explosive) materials would be provided for in the compatibility table for Class 1 (explosive) materials in proposed paragraph (f). For the purposes of the segregation table, Division 6.1 would include only poisonous liquids in Packing Group I, as defined in HM–181, Notice 87–4 (52 FR 42772 at 42961). The segregation requirements for these poisonous liquids would be the same as those proposed for Division 2.3 gases in Packing Group I because of their similar hazards.

New provisions to enhance safety and maintain consistency with the IMDG Code would address the segregation of Class 8 (corrosive) liquids from Division 1.3 (class B) special fireworks or railway torpedoes; Division 1.3 (explosive) materials from Division 2.1 (flammable gas) materials, Class 3 (flammable liquid) materials, Division 4.2 (spontaneously combustible) materials, Division 4.3 (dangerous when wet) materials, Division 5.1 (oxidizer) materials, and Division 5.2 (organic peroxides) materials; and Division 1.5 (very insensitive explosive) materials from all hazard classes and divisions except other Class 1 (explosive) materials.

Footnote (1), currently reserved, would be removed. Footnote (2), regarding co-loading Class 8 (corrosive) liquids with Division 4.1 (flammable solid) materials, or Division 5.1 (oxidizer) materials, would be revised by separating Class 3 (flammable liquid) materials, and Division 5.2 (organic peroxides) materials from Class 8 (corrosive) liquids, as indicated in proposed paragraph (d) of this section. Footnote (3) would be removed as it would be addressed in the proposed compatibility table for Class 1 (explosive) materials in proposed paragraph (f). Footnote (4), regarding Department of Defense (DOD) co-loading exceptions for explosives, would be removed. In proposed paragraphs (e)(4) (i) and (ii), proposed Note A would clarify the existing provisions currently contained in footnote (5), and proposed Note B would require materials identified in the proposed segregation table by the letter "O" to be palletized separately by class or division. Minimum pallet height requirements have been proposed to mitigate the commingling potential among certain hazardous materials. Footnote (6) would be removed because escort shipments of Class 7 (radioactive) materials and Class 1 (explosive) materials under the direction of the Department of Defense or the Department of Energy are not subject to the HMR under current provisions in existing § 173.7.

A new loading and storage table would be added for use when different compatibility groups of Class 1 (explosive) materials are transported on the same rail car, unless loaded in separate freight containers. An "X" at the intersection of two compatibility groups would indicate that those explosives shall not be carried on the same rail car, unless stowed in separate freight containers mounted on the rail car. In accordance with the U.N. Recommendations on the Transport of Dangerous Goods, Class 1 explosives are considered "compatible" if they can be transported together without significantly increasing either the probability of an accident, or the magnitude of the effects of an accident if one should occur. An explanation of classification codes and compatibility groups can be found in Table 4.1 of the U.N. Recommendations on the Transport of Dangerous Goods, sixth revised edition. With one exception, explosives of the same compatibility group but of different divisions could be transported together, provided that the entire shipment is handled and transported as though it was comprised solely of Class 1 (explosive materials having the lower division number. For example, a mixed shipment of Division 1.2 (Class A explosive) materials and Division 1.4 (Class C explosive) materials, compatibility group D, would be transported as Division 1.2 (Class A explosive) materials. However, when explosives of Division 1.5, compatibility group D, are transported in the same freight container as explosives of Division 1.2, compatibility group D, the total shipment must be handled and transported as Division 1.1, compatibility group D, consistent with § 4.6.3(b) of the U.N. Recommendations on the Transport of Dangerous Goods. In paragraphs (g)(2)(i) through (iii), Notes 1 and 2 would prescribe additional loading and storage provisions applicable to the transportation of explosives that are consistent with § 5.3 of the IMDG Code, entitled "Separation of goods of Class 1 of different compatability groups." Note 3 would be an additional loading and storage provision applicable to the transportation of those Class 1

(explosive) materials that have been assigned to compatibility group N.

Subpart D—Handling of Placarded Cars. Subpart D would be revised by adding a new § 174.82, consolidating switching requirements from §§ 174.83, 174.84, and 174.85 into § 174.83, and incorporating the rail car positioning requirements of §§ 174.86 through 174.93 into a new § 174.85. Newly added § 174.85 would contain an introductory paragraph and a chart illustrating proposed train placement requirements. These changes to the current train placement requirements would result in more restrictive train position requirements for Division 2.3 (PG I, Zone A, poisonous gas) and Division 6.1 (PG I, Zone A, poisonous liquid) materials and for Division 1.3 (Class B explosive) materials. The changes would lessen the restrictions on Division 1.1 and 1.2 (Class A explosive) materials, with regard to train positioning next to specially-equipped flat cars in TOFC/COFC and auto carriers. The proposed format of the chart is patterned after a train position chart in the Transportation of Dangerous Goods Regulations, issued by the Government of Canada, as well as charts published in various rail industry timetables and special instructions for the transportation of hazardous materials. RSPA believes the increased clarity of this proposed chart will provide substantial safety benefits. The chart separates hazard classes into Placard Groups based on comparable risks. For example, Placard Group 2 would consist of all Class 3 (flammable liquid), Class 4 (flammable solid), Class 5 (oxidizing), and Class 8 (corrosive) materials. Class 1 (explosive), Class 2 (gases), and Class 6 (poisonous) materials would also be included in Placard Group 2, except for explosives in Division 1.1 or 1.2 and poisonous gases or liquids in Division 2.3 (PG I, Zone A) or 6.1 (PG I, Zone A) which pose a greater risk and require additional restrictions. A section by section description of the proposed changes follows:

Section 174.82. General handling requirements for placarded rail cars, transport vehicles, freight containers, and bulk packages would be consolidated into this new section.

Section 174.83. This section would be rewritten to incorporate and clarify the current switching and yard, siding, or side track placement provisions of §§ 174.83 through 174.85.

Section 174.84. This section would replace current § 174.86 and would address train placement of placarded rail cars, transport vehicles, freight containers, and bulk containers, accompanied by guards or technical escorts. The phrase "temperature control equipment" would replace the phrase "lighted heater or stove" and would consist of automatic refrigerating or heating apparatus in operation, or lighted heaters or stoves.

Section 174.85. An introductory paragraph and a new chart illustrating train placement of rail cars transporting hazardous materials would replace the current section.

Section 174.86. This section would be incorporated into proposed § 174.84.

Sections 174.87 through 174.93. These sections would be incorporated into proposed § 174.85.

Subparts E through M

Section 174.280. The poison label requirement would be replaced by a requirement for a poisonous gas label.

Section 174.290. The reference to DOT packaging would be replaced by reference to the packaging requirements proposed under Docket HM-181, Notice 87-4.

Section 174.300. Current paragraph (d) would be removed and redesignated as new § 174.430. Paragraph (e) would be redesignated paragraph (d).

Section 174.410. The reference to DOT packaging would be replaced by reference to the packaging requirements proposed under Docket HM-181, Notice 87-4.

Section 174.510. The reference to § 173.182(b) would be removed.

Section 174.615. The chemical name for Paris green would be added.

Section 174.800. All references to carboys would be removed.

Section 174.810. The prohibition against the loading and storage of electric storate batteries (wet) with explosives would be removed, as it would be addressed in the Segregation Table in § 174.81. The reference to "§ 173.258" would be changed to "§ 173.159".

Section 174.812. The section, which prescribes special handling requirements for nitric acid in carboys, would be removed. Carboys would no longer be an authorized non-bulk packaging under the provisions of HM-181, Notice 87-4.

Section 174.840. The reference to "173.1090" would be changed to "§ 173.216".

Part 175—Carriage by Aircraft

Throughout 49 CFR part 175, RSPA is proposing to add the international numeric hazard class and division number where appropriate to conform with proposed adoption of the U.N. Recommendations. Metric measures and placard names, as proposed in Docket HM-181, Notice 87-4 (52 FR 42772), would be added to appropriate sections of the part. Other revisions to the part would be as follows:

Section 175.10. The reference to "§ 173.615(a)" would be revised to read "§ 173.217", and "§ 173.260(d)" would be revised to read "§ 173.159(d)".

Section 175.45. The words "etiologic agent" would be replaced with "etiologic or infectious substance".

Section 175.85. The references to "ICAO" in paragraphs (c)(1)(i), (c)(1)(ii), and (c)(1)(iv) would be removed as they would no longer be necessary, paragraph (c)(1)(iii) and (c)(1)(vii) would be removed, and paragraphs (c)(1)(iv) through (c)(1)(vi) would be redesignated (c)(1)(iii) through (c)(1)(v).

Section 175.90. The words "etiologic agent" would be replaced with "etiologic or infectious substance".

Section 175.305. The reference to "§ 173.120" would be revised to read "§ 173.220".

Section 175.310. The reference to DOT packaging would be replaced by a reference to the packaging proposed under Docket HM-181, Notice 87-4.

Section 175.320. The Table would be revised to clarify that Division 1.4 (Class C) detonators and detonating primers would be permitted aboard the same aircraft as Division 1.1 or 1.2 detonators or detonating primers.

Section 175.630. The label for etiologic agent would be replaced by an infectious substance label.

Section 175.640. The reference to "§ 173.1090" would be revised to read § "173.216".

Part 177—Carriage by Public Highway

Throughout 49 CFR part 177, RSPA is proposing to add the international numeric hazard class and division number where appropriate to conform with proposed adoption of the U.N. Recommendations. Metric measures and placard names, as proposed in Docket HM-181, Notice 87-4 (52 FR 42772), would be added to appropriate sections of the part. Other revisions to the part would be as follows:

Section 177.818. The water capacity limit per package for flammable cryogenic liquids would be measured in liters and decreased from 125 gallons to 450 liters (118.9 gallons) to provide consistency with the definitions in existing § 171.8 for bulk and non-bulk packagings.

Section 177.837. Paragraph (d) addressing pyroforic liquids would be removed from this section and added to § 177.838. Paragraph (e) would be redesignated as paragraph (d).

Section 177.838. The reference to DOT packaging would be replaced by a

reference to the packaging proposed under Docket HM–181, Notice 87–4; the reference to § 173.182(b) would be removed; and paragraph (d) of current § 174.837, addressing pyroforic liquids, would be added as new paragraph (h).

Section 177.839. All references to carboys would be removed.

Section 177.840. In paragraph (h), the water capacity limit per package for flammable cryogenic liquids would be measured in liters and decreased from 125 gallons to 450 liters (118.9 gallons) to provide consistency with the definitions in existing § 171.8 for bulk and non-bulk packagings.

Section 177.844. The reference to § 173.1090 would be changed to § 173.216.

Section 177.848. The section would be retitled "Segregation of Hazardous Materials". The introductory language and the segregation table in existing § 177.848 would be revised and set forth in proposed paragraph (d). Paragraph (a) would be removed because the separation of Class 8 (corrosive) materials and Division 1.1 or 1.2 (explosive) materials would be addressed in the proposed segregation table. A new paragraph (a) would be added setting forth the applicability of the section. Current paragraph (b) would be revised and redesignated paragraph (c) to include existing provisions from current § 177.848(b), but without the phrase "any other acidic materials which could release hydrocyanic acid from cyanides", as it is believed any commingling of cyanides or cyanide mixtures with acids or other acidic materials will release hydrocyanic acids. Current paragraph (c) would be removed because the existing requirement is addressed in the proposed compatibility table for Class 1 (explosive) materials in proposed paragraph (f). The current paragraph (d) would be removed as carboys would no longer be an authorized non-bulk packaging under the provisions of Docket HM–181, Notice 87–4. Paragraph (e) would be removed as provisions regulating smokeless powder for small arms, transported by rail or highway, are addressed in proposed § 173.171 of Docket HM–181, Notice 87–4. Paragraph (f) would be redesignated paragraph (d). A new paragraph (f) would be added to introduce the compatibility table for Class 1 (explosive) materials.

The segregation table instructions would be revised to clarify that its provisions also apply to materials held in storage facilities during the course of transportation. The segregation table would be revised by replacing proper shipping names with U.N. hazard classes or divisions. Segregation of hazardous materials would be required where the letter "X" is located at the intersection of two hazard classes or divisions. The reader will find an index to hazard class definitions in HM–181, Notice 87–4 (52 FR 42772 at 42949). The letter "O" would be added to the instructions and segregation table to indicate separation of classes and divisions of hazardous materials by a minimum distance of 1.2 m or 4 feet in any direction to enhance transportation safety. Segregation of Class 8 (corrosive) liquids from Class 1 (explosive) materials would be addressed in the proposed segregation table. Comments specifically addressing this proposed revision are welcome. An "*" would be added to the segregation table to indicate that segregation among different Class 1 (explosive) materials would be governed by the compatibility table in paragraph (f) of this section.

Division 1.6 (extremely insensitive explosive) materials and Division 6.1 (poisonous liquids; packing group I only) materials would be added to the segregation table in accordance with the IMDG Code. Segregation of Division 1.6 (extremely insensitive explosive) materials from other Class 1 (explosive) materials would be explained in the compatibility table for Class 1 (explosive) materials in proposed paragraph (f). For the purposes of the segregation table, Division 6.1 would include only poisonous liquids in Packing Group I, as defined in HM–181, Notice 87–4. The segregation requirements for these poisonous liquids would be the same as those proposed for Division 2.3 gases in Packing Group I because of their similar hazards.

New provisions to enhance safety and maintain consistency with the IMDG Code would address the segregation of Class 8 (corrosive) liquids from Division 1.3 (class B) special fireworks or railway torpedoes; Division 1.3 (explosive) materials from Division 2.1 (flammable gas) materials, Class 3 (flammable liquid) materials, Division 4.2 (spontaneously combustible) materials, Division 4.3 (dangerous when wet) materials, Division 5.1 (oxidizer) materials, and Division 5.2 (organic peroxides) materials; and Division 1.5 (very insensitive explosive) materials from all hazard classes and divisions except other Class 1 (explosive) materials.

Footnote (1), regarding the segregation of Class 1 (explosive) materials, would be removed and addressed in the proposed compatibility table for Class 1 (explosive) materials. Footnote (2), regarding co-loading Class 8 (corrosive) liquids with Division 4.1 (flammable solid) materials, or Division 5.1 (oxidizer) materials, would be revised by separating Class 3 (flammable liquid) materials, and Division 5.2 (organic peroxides) materials from Class 8 (corrosive) liquids, as indicated in proposed paragraph (d) of this section. Footnote (3) would be removed as it would be addressed in the proposed compatibility table for Class 1 (explosive) materials in proposed paragraph (f). Footnote (4), regarding Department of Defense co-loading exceptions for explosives, would be removed. In proposed paragraphs (e)(4) (i) and (ii), Note A would clarify the existing provisions currently contained in footnote (5), and Note B would require materials identified in the proposed segregation table by the letter "O" to be palletized separately by class or division. Minimum pallet height requirements have been proposed to mitigate the commingling potential among certain hazardous materials. Footnote (6) would be removed because escort shipments of Class 7 (radioactive) materials and Class 1 (explosive) materials under the direction of the Department of Defense or the Department of Energy are not subject to the HMR under current provisions in existing § 173.7.

A new loading and storage table would be added in proposed paragraph (f) for use when different compatibility groups of Class 1 (explosive) materials are transported in the same transport vehicle. An "X" at the intersection of two compatibility groups would indicate that those explosives shall not be carried in the same transport vehicle. In accordance with the U.N. Recommendations on the Transport of Dangerous Goods, Class 1 explosives are considered "compatible" if they can be transported together without significantly increasing either the probability of an accident, or the magnitude of the effects of an accident if one should occur. An explanation of classification codes and compatibility groups can be found in Table 4.1 of the United Nations Recommendations on the Transport of Dangerous Goods, sixth revised edition. With one exception, explosives of the same compatibility group but different divisions could be transported together, provided that the entire shipment is handled and transported as though it is comprised solely of Class 1 (explosive) materials having the lower division number. For example, a mixed shipment of Division 1.2 (Class A explosive) materials and Division 1.4 (Class C explosive) materials, compatibility group D, would be transported as Division 1.2 (Class A explosive) materials. However, when

explosives of Division 1.5, compatibility group D, are transported in the same freight container as explosives of Division 1.2, compatibility group D, the total shipment must be handled and transported as Division 1.1, compatibility group D. This is consistent with section 4.6.3(b) of the U.N. Recommendations on the Transport of Dangerous Goods.

In paragraphs (g)(2) (i) through (iii), Notes 1 and 2 would prescribe additional loading and storage provisions applicable to the transportation of explosives that are consistent with section 5.3 of the IMDG Code, entitled "Separation of goods of Class 1 of different compatibility groups." Note 3 would be an additional loading and storage provision applicable to the transportation of those Class 1 (explosive) materials that have been assigned to compatibility group N.

II. Administrative Notices

A. Executive Order 12291

The RSPA has determined that this rulemaking: (1) Is not "major" under Executive Order 12291; (2) is not "significant" under DOT's regulatory policies and procedures (44 FR 11034); (3) will not affect not-for-profit enterprises or small governmental jurisdictions; and (4) does not require an environmental impact statement under the National Environmental Policy Act (40 U.S.C. 4321 *et seq.*). A regulatory evaluation is available for review in the docket.

B. Executive Order 12612

This proposed action has been analyzed in accordance with the principles and criteria in Executive Order 12612, and it has been determined that the proposed rule does not have sufficient Federalism implications to warrant the preparation of a Federalism Assessment. This proposal has no substantial direct impact on the States, on the Federal-State relationship, or on the distribution of power and responsibilities among levels of government. Therefore, this proposed rulemaking contains no policies with Federalism implications as defined in Executive Order 12612.

C. Regulatory Flexibility Act

The proposed changes to the current modal requirements would generally affect persons involved in the handling, transport, and storage (incident to transportation) of hazardous materials, some of whom may be small entities. The changes would involve becoming familiar with new terminology and would impose little or no cost on those entities. Based on limited information concerning the size and nature of entities likely to be affected by this proposed rule, I certify that the regulations proposed within would not, if promulgated, have a significant economic impact on a substantial number of small entities under the criteria of the Regulatory Flexibility Act.

List of Subjects

49 CFR Part 174

Hazardous materials transportation, Radioactive materials, Railroad safety.

49 CFR Part 175

Air carriers, Hazardous materials transportation, Radioactive materials, Reporting and recordkeeping requirements.

49 CFR Part 177

Hazardous materials transportation, Motor carriers, Radioactive materials, Reporting and recordkeeping requirements.

For the reasons set out in the preamble, Title 49, Chapter I, Subchapter C of the Code of Federal Regulations would be amended as set forth below:

PART 174—CARRIAGE BY RAIL

1. The authority citation for part 174 would continue to read as follows:

Authority: 49 U.S.C. App. 1803, 1804, 1808, 49 CFR 1.53(e), 1.53, App. A to part 1.

§ 174.8 [Amended]

2. In § 174.8, paragraphs (b) and (c), the phrase "Class A explosives" would be removed and replaced with the phrase "Division 1.1 or 1.2 (Class A explosive) materials".

§ 174.10 [Amended]

3. In § 174.10, the following changes would be made:

a. In paragraph (a), the phrase "EXPLOSIVES A" would be removed and replaced with the phrase "EXPLOSIVES 1.1 or 1.2 (EXPLOSIVES A)".

b. In paragraph (d), the word "explosives" would be removed and replaced with the phrase "Class 1 (explosive) materials".

§ 174.14 [Amended]

4. In § 174.14, paragraph (b), the phrase "flammable liquid or gas, or a poison gas" would be removed and replaced with the phrase "Division 2.1 (flammable gas), Division 2.3 (poisonous gas) or Class 3 (flammable liquid) material".

§ 174.16 [Amended]

5. In § 174.16, the following changes would be made:

a. In paragraph (a), the word "explosives" would be removed and replaced with the phrase "Class 1 (explosive) materials".

b. In paragraphs (b)(1), (b)(2), and (b)(3), the phrase "Class A explosives" would be removed and replaced with the phrase "Division 1.1 or 1.2 (Class A explosive) materials".

§ 174.18 [Amended]

6. In § 174.18, the word "explosives" would be removed and replaced with the phrase "Class 1 (explosive) materials" in both places it appears.

7. In § 174.25, paragraph (a)(2), the table would be revised to read as follows:

§ 174.25 Additional information on waybills, switching orders and other billings.

(a) * * *

(2) * * *

Class/Division	Hazardous material	Placard notation	Placard endorsement
Division 1.1 or Division 1.2	Explosives (Class A)	Placarded EXPLOSIVES 1.1 *or* EXPLOSIVES 1.2	Explosives.
	Explosive chemical ammunition containing Division 2.3 gas.	Placarded EXPLOSIVES 1.1 *or* EXPLOSIVE 1.2, & POSION GAS.	Explosives and poison gas.
Division 1.3	Explosives (Class B)	Placarded EXPLOSIVES 1.3	Dangerous.
Division 1.4	Explosives (Class C)	Placarded EXPLOSIVES 1.4	Do.
Division 1.5	Blasting Agent	Placarded EXPLOSIVES 1.5	Do.
Division 1.6	N/A	Placarded EXPLOSIVES 1.6	Do.
Division 2.1	Flammable gas	Placarded FLAMMABLE GAS	Do.
Division 2.2	Nonflammable gas	Placarded NONFLAMMABLE GAS	Do.
Division 2.3	Poisonous gas	Placarded POISON GAS	Poison gas.
Class 3	Flammable Liquid	Placarded FLAMMABLE	Dangerous.
Class 3	Combustible Liquid	Placarded COMBUSTIBLE	Do.

Class/Division	Hazardous material	Placard notation	Placard endorsement
Class 4	Flammable solid	Placarded FLAMMABLE SOLID, SPONTANEOUSLY COMBUSTIBLE *or* DANGEROUS WHEN WET.	Do.
Division 5.1	Oxidizer	Placarded OXIDIZER	Do.
Division 5.2	Organic peroxide	Placarded ORGANIC PEROXIDE	Do.
Division 6.1	Poisonous/Irritating	Placarded POISON	Do.
Class 7	Radioactive material (Yellow-III only)	Placarded RADIOACTIVE	Radioactive material.
Class 8	Corrosive	Placarded CORROSIVE	Dangerous.
Tank cars which contain a residue of a hazardous material other than a combustible liquid.		See Sec. 174.25(c)	Do.
Tank cars which contain a residue of a combustible liquid		See Sec. 174.25(c).	

§ 174.25 [Amended]

8. In § 174.25, the following changes would be made:

a. In § 174.25, paragraph (a)(2)(i), the phrase "⅜ of an inch" would be removed and replaced with the phrase "1 cm (0.4 inch)".

b. In paragraph (a)(2)(ii), the phrase "1/10 of an inch" would be removed and replaced with the phrase ".25 cm (0.1 inch)".

c. In paragraph (c), the phrase "Combustible liquid" would be removed and replaced with the phrase "Class 3".

d. In paragraph (d), the phrase "Explosives A" would be removed and replaced with the phrase "Division 1.1 or 1.2 (Class A explosive) materials" each place it appears.

§ 174.26 [Amended]

9. In § 174.26, paragraph (a), the phrase "EXPLOSIVE A" would be removed and replaced with the phrase "EXPLOSIVES 1.1 or 1.2 (EXPLOSIVES A)".

§ 174.47 [Amended]

10. In § 174.47, paragraphs (a) and (b), the word "explosives" would be removed and replaced with the phrase "Class 1 (explosive) materials".

§ 174.49 [Amended]

11. In § 174.49, the phrase "flammable liquids, gases, or vapors" would be removed and replaced with the phrase "Division 2.1 (flammable gas) or Class 3 (flammable liquid) materials or vapors".

§ 174.50 [Amended]

12. In § 174.50 paragraph (d), the phrase "three inches in size" would be removed and replaced with the phrase "7.5 cm (3 inches) in size".

§ 174.67 [Amended]

13. In § 174.67, the following changes would be made:

a. In paragraph (a)(3), the phrase "12 inches high by 15 inches wide" would be removed and replaced with the phrase "30 cm (11.8 inches) high by 38 cm (15 inches) wide", the phrase "4 inches high" would be removed and replaced with the phrase "10 cm (3.9 inches)", and the phrase "2 inches high" would be removed and replaced with the phrase "5 cm (2 inches)".

b. In paragraph (k), the phrase "36 inches long" would be removed and replaced with the phrase "1 meter (3.3 feet) long".

14. Section 174.81 would be revised to read as follows:

§ 174.81 Segregation of hazardous materials.

(a) This section applies to materials which meet one or more of the hazard classes defined in this subchapter and are in packages which are required to be labeled or placarded under the provisions of part 172 of this subchapter.

(b) In addition to the provisions of paragaph (d) of this section, when a rail car is to be transported by vessel, other than a ferry vessel, hazardous materials on or within that rail car shall be stowed and segregated in accordance with §§ 176.83 and 176.44 of this subchapter.

(c) In addition to the provisions of paragraph (d) of this section, cyanides or cyanide mixtures shall not be loaded or stored with acids.

(d) Hazardous materials shall not be loaded, transported, or stored together, except as provided in this section and in accordance with the following Table.

SEGREGATION TABLE FOR HAZARDOUS MATERIALS

Class or division		Notes	1.1 1.2	1.3	1.4	1.5	1.6	2.1	2.2	2.3 gases packing group I only	3	4.1	4.2	4.3	5.1	5.2	6.1 liquids packing group I only	7	8 liquids only
Explosives	1.1 and 1.2	A	•	•	•	•	•	X	X	X	X	X	X	X	X	X	X	X	X
Explosives	1.3		•	•	•	•	•	X		X	X		X	X	X	X	X		X
Explosives	1.4		•	•	•	•	•	O		O	O		O				O		O
Very insensitive explosives.	1.5		•	•	•	•	•	X	X	X	X	X	X	X	X	X	X	X	X
Extremely insensitive explosives.	1.6		•	•	•	•	•												
Flammable gases	2.1		X	X	O	X				O			O	O	O	O	O	O	O
Non-toxic, non-flammable gases.	2.2		X			X													
Poisonous gases: packing group I only.	2.3		X	X	O	X		O			X	X	X	X	X	X			X
Flammable liquids	3	B	X	X	O	X				X		O	O	O	O	O	X		O
Flammable solids	4.1	B	X			X				X	O						X		O
Spontaneously combustible materials.	4.2		X	X	O	X		O		X	O						X		X
Dangerous when wet materials.	4.3		X	X		X		O		X	O						X		X
Oxidizers	5.1	A, B	X	X		X		O		X	O						X		O
Organic peroxides	5.2	B	X	X		X		O		X	O						X		O

SEGREGATION TABLE FOR HAZARDOUS MATERIALS—Continued

Class or division		Notes	1.1 1.2	1.3	1.4	1.5	1.6	2.1	2.2	2.3 gases packing group I only	3	4.1	4.2	4.3	5.1	5.2	6.1 liquids packing group I only	7	8 liquids only
Poisonous liquids: packing group I only.	6.1		X	X	O	X		O			X	X	X	X	X	X			X
Radioactive materials	7		X			X		O											
Corrosive liquids	8	B	X	X	O	X		O		X	O	O	X	X	O	O	X		

(e) Instructions for using the Segregation Table for Hazardous Materials set forth in paragraph (d) of this section are as follows:

(1) The letter "X" in the Table means that these materials shall not be loaded, transported, or stored together in the same rail car or storage facility during the course of transportation.

(2) The letter "O" in the Table means that these materials shall not be loaded, transported, or stored together in the same rail car or storage facility during the course of transportation, unless separated by a distance of 1.2 m (4 feet) in all directions.

(3) The "*" in the Table means that segregation among different Class 1 (explosive) materials is governed by the Compatibility Table in paragraph (f) of this section.

(4) The notes in the second column of the Table mean the following:

(i) "A" means that ammonium nitrate fertilizer may be loaded or stored with Division 1.1 (Class A explosive) materials.

(ii) "B" means that the materials for which an "O" appears in the Table may be loaded and transported together if each class or division is separately palletized at a minimum height of 10.6 cm (4 inches) off the floor of the rail car and separated by a distance of 1.2 m (4 feet) in all directions.

(f) Class 1 (explosive) materials shall not be loaded, transported, or stored together, except as provided in this section and in accordance with the following Table.

COMPATIBILITY TABLE FOR CLASS 1 (EXPLOSIVE) MATERIALS

Compatibility group	A	B	C	D	E	F	G	H	J	K	L	N	S
A		X	X	X	X	X	X	X	X	X	X	X	X
B	X		X	X	X	X	X	X	X	X	X	X	
C	X	X		2	2	X	X	X	X	X	X	3	
D	X	X	2		2	X	X	X	X	X	X	3	
E	X	X	2	2		X	X	X	X	X	X	3	
F	X	X	X	X	X		X	X	X	X	X	X	
G	X	X	X	X	X	X		X	X	X	X	X	
H	X	X	X	X	X	X	X		X	X	X	X	
J	X	X	X	X	X	X	X	X		X	X	X	
K	X	X	X	X	X	X	X	X	X		X	X	
L	X	X	X	X	X	X	X	X	X	X	1	X	X
N	X	X	3	3	3	X	X	X	X	X	X		
S	X										X		

(g) Instructions for using the Compatibility Table for class 1 (explosive) materials set forth in paragraph (f) of this section are as follows:

(1) The letter "X" in the Table means that explosives of different compatibility groups shall not be carried on the same rail car, unless packed in separate freight containers (e.g., two or more freight containers mounted upon the same rail car).

(2) The notes in the Table mean the following:

(i) "1" means explosives from compatibility group L shall only be carried on the same rail car with an identical explosive.

(ii) "2" means any combination of explosives from compatibility groups C, D, or E is assigned to compatibility group E.

(iii) "3" means any combination of explosives from compatibility groups C, D, or E with those in compatibility group N is assigned to compatibility group D.

(h) With one exception, explosives of the same compatibility group but of different divisions may be transported together, provided that the whole shipment is handled and transported as though its entire contents were comprised of the lower division. For example, a mixed shipment of Division 1.2 (Class A explosive) materials and Division 1.4 (Class C explosive) materials, compatibility group D, must be handled and transported as Division 1.2 (Class A explosive) materials. However, when Division 1.5 (blasting agent) materials, compatibility group D, are transported in the same freight container as Division 1.2 (Class A explosive) materials, compatibility group D, the shipment must be handled and transported as Division 1.1 (Class A explosive) materials, compatibility group D.

15. The subpart D heading would be revised to read as follows:

Subpart D—Handling of Placarded Rail Cars, Transport Vehicles and Freight Containers

16. A new § 174.82 would be added to read as follows:

§ 174.82 General requirements for the handling of placarded rail car, transport vehicles, freight containers, and bulk packages.

(a) Unless otherwise specified, this subpart does not apply to the handling of rail cars, transport vehicles, freight containers, or bulk packagings, which contain Class 3 combustible liquids, Class 6, Packing Group III materials,

Class 9 materials, or ORM–D or ORM–E materials.

(b) A placarded rail cars, transport vehicle, freight container, or bulk package shall not be transported in a passenger train.

17. Section 174.83 would be revised to read as follows:

§ 174.83 Switching placarded rail cars, transport vehicles, freight containers, and bulk packagings.

(a) (1) A loaded placarded tank car or a draft which includes a loaded placarded tank car may not be cut off until the preceding rail car clears the ladder track.

(2) A loaded placarded tank car or a draft which includes a loaded placarded tank car must clear the ladder track before another rail car is allowed to follow.

(b) A rail car shall not be allowed to move under its own momentum, or be coupled into or struck by any other rail car with more force than is necessary to complete the coupling, when any rail car is:

(1) Placarded in Division 1.1 or 1.2 (Class A Explosives);

(2) A tank car placarded in Division 2.3 (PG I, Zone A; poisonous gas) or 6.1 (PG I, Zone A; poisonous liquid);

(3) A Class DOT 113 tank car transporting a Division 2.1 (flammable gas) material; or

(4) A placarded flatcar, or a flatcar transporting a loaded placarded rail car, transport vehicle, freight container, or bulk packaging.

(c) When transporting a rail car, transport vehicle, or freight container placarded for Division 1.1 or 1.2 (Class A explosive) materials in a terminal, yard, or on a side track or siding, the placarded rail car must be separated from the engine by at least one non-placarded rail car and must be placed in a location so that it will be safe from danger of fire. A rail car, transport vehicle, or freight container placarded for Division 1.1 or 1.2 (Class A explosive) materials shall not be placed under a bridge or overhead crossing, or in or alongside a passenger shed or station, except during transfer operations.

18. Section 174.84 would be revised to read as follows:

§ 174.84 Position in train of loaded placarded rail cars, transport vehicles, freight containers or bulk packagings when accompanied by guards or technical escorts.

A rail car placarded in Division 1.1 or 1.2 (Class A explosive); Division 2.3 (PG I, Zone A; poisonous gas); or Division 6.1 (PG I, Zone A; poisonous liquid) in a moving or standing train must be next to and ahead of any car occupied by the guards or technical escorts accompanying the placarded rail car. However, if a rail car occupied by the guards or technical escorts has temperature control equipment in operation, it must be the fourth car behind any car requiring Division 1.1 or 1.2 (Class A explosive) placards.

19. Section 174.85 would be revised to read as follows:

§ 174.85 Position in train of placarded cars, transport vehicles, freight containers, and bulk packagings.

(a) Except as provided in paragraphs (b) and (c) of this section, the position in a train of each loaded placarded car, transport vehicle, freight container, and bulk packaging must conform to the provisions of this section.

(b) A car placarded "RADIOACTIVE" must be separated from a locomotive, occupied caboose, or carload of undeveloped film by at least one non-placarded car.

(c) A car placarded "RESIDUE" must be separated from a locomotive or occupied caboose by at least one non-placarded car.

(d) *Position of rail cars in a train.* In the following table:

(1) Where an "X" appears at the intersection of a Placard Group column and a Restriction row, the corresponding restriction applies.

(2) "Rail Car" means a car other than a tank car.

POSITION IN TRAIN OF PLACARDED CARS TRANSPORTING HAZARDOUS MATERIALS

RESTRICTIONS	Placard group 1	Placard group 2		Placard group 3		Placard group 4
	Rail car	Tank car	Rail car	Tank car	Rail car	Rail car
1. When train length permits, placarded car shall not be nearer than the sixth car from the engine or occupied caboose.	X	X		X		
2. When train length does not permit, placarded car must be placed near the middle of the train, but not nearer than the second car from an engine or occupied caboose.	X	X		X		
3. An open-top car when any of the lading protrudes beyond the car ends or if shifted would protrude beyond the car ends.	X	X		X		
4. Loaded flat car except closed TOFC/COFC equipment, auto carriers, and other specially-equipped cars with tie-down devices for handling vehicles. Permanent bulk head flat cars are considered the same as open-top cars.	X	X		X		
5. Any car, piggyback, or container with temperature control equipment or internal combustion engine in operation.	X	X		X		
6. Placarded cars shall not be placed next to each other based on the following:						
Placard Group 1		X	X	X	X	X
Placard Group 2	X			X	X	X
Placard Group 3	X	X	X			X
Placard Group 4	X	X	X	X	X	

Placard Group:
Group 1—Divisions 1.1 and 1.2 (Class A explosive) materials.
Group 2—Divisions 1.3, 1.4, 1.5 (Class B and C explosive), Class 2 (compressed gas; other than Div 2.3, PG I, Zone A), Class 3 (flammable liquid), Class 4 (flammable solid), Class 5 (oxidizing), Class 6 (poisonous liquid; other than Div 6.1, PG I, Zone A), and Class 8 (corrosive) materials.
Group 3—Divisions 2.3 (PG I, Zone A; poisonous gas) and 6.1 (PG I, Zone A; poisonous liquid) materials.
Group 4—Class 7 (corrosive) materials.

§ 174.86 [Removed]

20. Section 174.86 would be removed.

§ 174.87 [Removed]

21. Section 174.87 would be removed.

§ 174.88 [Removed]

22. Section 174.88 would be removed.

§ 174.89 [Removed]

23. Section 174.89 would be removed.

§ 174.90 [Removed]

24. Section 174.90 would be removed.

§ 174.91 [Removed]

25. Section 174.91 would be removed.

§ 174.92 [Removed]

26. Section 174.92 would be removed.

§ 174.93 [Removed]

27. Section 174.93 would be removed.

28. The subpart E heading would be revised to read as follows:

Subpart E—Class 1 (Explosive) Materials

§ 174.100 [Amended]

29. In § 174.100, the following changes would be made:

a. In the section heading and paragraph (b), the word "explosives" would be removed and replaced with the phrase "Class 1 (explosive) materials" each place it appears.

b. In paragraph (a), the word "Explosives" would be removed and replaced with the phrase "Class 1 (explosive) materials".

c. In paragraph (b), the word "explosive" would be removed and replaced with the phrase "Class 1 (explosive) materials".

§ 174.101 [Amended]

30. In § 174.101, the following changes would be made:

a. In paragraph (b), the phrase "Class A or Class B explosives" would be removed and replaced with the phrase "Division 1.1, 1.2, or 1.3 (Class A or Class B explosive) materials", and the phrase "500 pounds" would be revised to read "225 kg (496 pounds)".

b. In paragraph (o) introductory text, the phrase "Class A or Class B explosives" would be removed and replaced with the phrase "Division 1.1, 1.2, or 1.3 (Class A or Class B explosive) materials".

c. In paragraph (c), the phrase "high explosives, low explosives or black powder" would be removed and replaced with the phrase "Division 1.1 or 1.2 (Class A explosive) materials".

d. In paragraphs (a), (d), (h), and (l), the phrase "Class A explosives" would be removed and replaced with the phrase "Division 1.1 or 1.2 (Class A explosive) materials" and in paragraph (n) introductory text, the phrase "Class A explosive" would be removed and replaced with the phrase "Division 1.1 or 1.2 (Class A explosive) material".

e. In paragraph (h), the word "Explosives" would be removed and replaced with the phrase "Class 1 (explosive) materials" both places it appears.

f. In the section heading and paragraphs (e), (f), (i), (j), (k), (n)(2), (o)(1), and (o)(4), the word "explosives" would be removed and replaced with the phrase "Class 1 (explosive) materials" each place it appears.

g. In paragraphs (n)(1), (n)(3), (o)(2), and (o)(3), the phrase "8 miles per hour" would be removed and replaced with the phrase "13 km (8.1 miles) per hour".

§ 174.102 [Amended]

31. In § 174.102, the following changes would be made:

a. In paragraphs (a) and (b), the phrase "Class A explosives" would be removed and replaced with the phrase "Division 1.1 or 1.2 (Class A explosive) materials".

b. In paragraph (b), "Explosives" and "explosives" would be removed and replaced with the phrase "Class 1 (explosive) materials" in both places they appear.

§ 174.103 [Amended]

32. In § 174.103, the following changes would be made:

a. In paragraph (a), the phrase "high explosives" would be removed and replaced with the phrase "Division 1.1 or 1.2 (Class A explosive) materials".

b. In paragraphs (a), (c) introductory text, and (e), the word "explosives" would be removed and replaced with the phrase "Class 1 (explosive) materials".

c. In paragraph (d), the phrase "at least 2 inches" would be removed and replaced with the phrase "at least 5 cm (2 inches)".

§ 174.104 [Amended]

33. In § 174.104, the following changes would be made:

a. In the section heading and paragraphs (a), (b) introductory text, (c), (d), (e), and (f), the phrase "Class A explosives" would be removed and replaced with the phrase "Division 1.1 or 1.2 (Class A explosive) materials".

b. In paragraph (a), the phrase "80,000 pounds capacity" would be removed and replaced with the phrase "36,300 kg (80,028 pounds) capacity".

c. In paragraphs (b)(4), (b)(7), and (b)(8), the word "explosives" would be removed and replaced with the phrase "Class 1 (explosive) materials".

d. In paragraph (b)(10), the phrase "three-eighths inch thick" would be removed and replaced with the phrase "1 cm (0.4 inch) thick".

e. In paragraph (b)(11), the phrase "at least 12 inches" would be removed and replaced with the phrase "at least 30 cm (11.8 inches)".

f. In paragraph (f), the phrase "7 by 7 inches or 6 by 8 inches" would be removed and replaced with the phrase "18 by 18 cm (7.1 by 7.1 inches) or 15 by 20 cm (5.9 by 7.9 inches)".

§ 174.105 [Amended]

34. In § 174.105, in the section heading and text, the phrase "Class A explosives" would be removed and replaced with the phrase "Division 1.1 or 1.2 (Class A explosive) materials".

§ 174.106 [Amended]

35. In § 174.106, in the section heading and paragraphs (a), (b), and (c), the phrase "Class A explosives" would be removed and replaced with the phrase "Division 1.1 or 1.2 (Class A explosive) materials".

§ 174.107 [Amended]

36. In § 174.107, the following changes would be made:

a. In the section heading and paragraphs (a) and (b), the phrase "Class A explosives" would be removed and replaced with the phrase "Division 1.1 or 1.2 (Class A explosive) materials".

b. In paragraph (b), the word "explosives" would be removed and replaced with the phrase "Class 1 (explosive) materials" each place it appears.

§ 174.109 [Amended]

37. In § 174.109, the word "explosives" would be removed and replaced with the phrase "Class 1 (explosive) materials".

§ 174.110 [Amended]

38. In § 174.110, the following changes would be made:

a. The phrase "Class A explosives" would be removed and replaced with the phrase "Division 1.1 or 1.2 (Class A explosive) materials".

b. The phrase "150 pounds" would be removed and replaced with the phrase "68 kg (149.9 pounds)".

c. The word "explosives" would be removed and replaced with the phrase "Class 1 (explosive) materials".

d. The phrase " 1 inch thick" would be removed and replaced with the phrase "2.5 cm (0.98 inch) thick".

e. The phrase "2 inches high" would be removed and replaced with the phrase "5 cm (2 inches) high".

f. The phrase "EXPLOSIVES A placards" would be removed and replaced with the phrase "EXPLOSIVES 1.1 or 1.2 (EXPLOSIVES A) placards".

g. The phrase "Explosives A" would be removed and replaced with the phrase "Division 1.1 or 1.2 (Class A explosive) materials".

§ 174.112 [Amended]

39. In § 174.112, in the section heading and paragraphs (a), (b), (c) introductory text, and (c)(3), the phrase "Class B explosives" would be removed and replaced with the phrase "Division 1.3 (Class B explosive) materials and Division 1.2 (devices corresponding to Class B explosive) materials" each place it appears.

§ 174.114 [Amended]

40. In § 174.114, the following changes would be made:

a. The paragraph (a) designation would be removed.

b. The section heading phrase " 'EXPLOSIVES A' laden cars" would be removed and replaced with the phrase "Cars loaded with Division 1.1 or 1.2 (explosive) materials".

c. The phrase " 'EXPLOSIVES A' placards" would be removed and replaced with the phrase "EXPLOSIVES 1.1 or EXPLOSIVES 1.2 (EXPLOSIVES A) placards".

§ 174.115 [Amended]

41. In § 174.115, in the section heading and paragraphs (a), (b) introductory text, and (b)(3), the phrase "Class C explosives" would be removed and replaced with the phrase "Division 1.4 (Class C explosive) materials" each place it appears.

42. The subpart F heading would be revised to read as follows:

Subpart F—Detailed Requirements for Class 2 (Gases) Materials

§ 174.200 [Amended]

43. In § 174.200, the following changes would be made:

a. In paragraphs (a) and (b), the phrase "Flammable gases" would be removed and replaced with the phrase "Division 2.1 (flammable gas) materials" and in paragraph (c) introductory text the phrase "flammable gases" would be removed and replaced with the phrase "Division 2.1 (flammable gas) materials".

b. In paragraph (c)(4), the phrase "over 130 degrees F" would be removed and replaced with the phrase "over 54°C (130°F)".

§ 174.201 [Amended]

44. In § 174.201, the following changes would be made:

a. In the section heading, the phrase "Compressed gas" would be removed and replaced with the phrase "Class 2 (gases) material".

b. In paragraphs (a) introductory text and (c), the phrase "compressed gases" would be removed and replaces with the phrase "Class 2 (gases) materials".

§ 174.204 [Amended]

45. In § 174.204, the following changes would be made:

a. In paragraph (a) introductory text, the phrase "compressed gas" would be removed and replaced with the phrase "Class 2 (gases) material".

b. In paragraph (a)(2)(i), the phrase "flammable cryogenic liquid" would be removed and replaced with the phrase "Division 2.1 (flammable cryogenic liquid) materials".

§ 174.208 [Amended]

46. In § 174.208, the following changes would be made:

a. In paragraph (a), the phrase "flammable liquid or gas" would be removed and replaced with the phrase "Class 3 (flammable liquid) materials or Division 2.1 (flammable gas) materials".

b. In paragraph (b), the phrase "poisonous liquid, gas, or solid" would be removed and replaced with the phrase "Division 6.1 (poisonous) or Division 2.3 (poisonous gas) materials".

§ 174.280 [Amended]

47. In § 174.280, the following changes would be made:

a. In the section heading, the phrase "Poison gases" would be removed and replaced with the phrase "Division 2.3 (poisonous gas) materials".

b. In § 174.280, the phrase "poison label" would be removed and replaced with the phrase "POISON GAS label".

§ 174.290 [Amended]

48. In § 174.290, the following changes would be made:

a. In the section heading and paragraphs (a), (b) introductory text, (b)(2), (c), (d), (f), (g), (h), and (i), the phrase "Poison A" would be removed and replaced with the phrase "Division 2.3 (PG I, Zone A; poisonous gas) and Division 6.1 (PG I, Zone A; poisonous liquid) materials".

b. In paragraph (b)(1), the phrase "DOT–5A or WD–5A[1] metal drums" would be removed and replaced with the phrase "UN1N1 or UN1N2 metal drums, or equivalent military specification metal drums" and footnote 1 would be removed.

49. The subpart G heading would be revised to read as follows:

Subpart G—Detailed Requirements for Class 3 (Flammable Liquid) Materials

§ 174.300 [Amended]

50. In § 174.300, the following changes would be made:

a. In paragraph (a), the phrase "Flammable liquids" would be removed and replaced with the phrase "Class 3 (flammable liquid) materials" and in paragraph (c) introductory text, the phrase "flammable liquids" would be removed and replaced with the phrase "Class 3 (flammable liquid) materials".

b. In paragraph (b), the phrase "flammable liquid" would be removed and replaced with the phrase "Class 3 (flammable liquid) materials".

c. In paragraph (c)(4), the phrase "over 130 degrees F" would be removed and replaced with the phrase "over 54°C (130°F)".

d. Paragraph (d) would be removed and paragraph (e) would be redesignated as paragraph (d).

e. In newly designated paragraph (d), the phrase "flammable liquids" would be removed and replaced with the phrase "Class 3 (flammable liquid) materials".

§ 174.304 [Amended]

51. In § 174.304, in the section heading the phrase "Flammable liquids" would be removed and replaced with the phrase "Class 3 (flammable liquid) materials" and in the text the phrase "flammable liquid" would be removed and replaced with the phrase "Class 3 (flammable liquid) material".

52. In § 174.380, the section heading would be revised to read as follows:

§ 174.380 Class 3 (flammable liquid) materials, with a subsidiary hazard of Division 6.1 (poisonous) materials, with foodstuffs.

§ 174.380 [Amended]

53. In § 174.380, the phrase "flammable liquid" would be removed and replaced with the phrase "Class 3 (flammable liquid) materials".

54. The subpart H heading would be revised to read as follows:

Subpart H—Detailed Requirements for Class 4 (Flammable Solid) Materials

§ 174.410 [Amended]

55. In § 174.410, paragraph (d), the phrase "Specification 15A or 12C" would be removed and replaced with the phrase "UN4C1, UN4C2, or UN4G" and the phrase "(§§ 178.168, 178.206 of this subchapter)" would be removed.

56. Section 174.430 would be added to read as follows:

§ 174.430 Special handling requirements for Division 4.2 (pyroforic liquid) materials.

Cylinders containing Division 4.2 (pyroforic liquid) materials, unless packed in strong box or case and secured therein to protect valves, must be loaded with all valves and safety relief devices in the vapor space. All cylinders must be secured so that no shifting occurs in transit.

57. In § 174.480, the section heading would be revised to read as follows:

§ 174.480 Class 4 (flammable solid) materials, with a subsidiary hazard of Division 6.1 (poisonous) materials, with foodstuffs.

§ 174.480 [Amended]

58. In § 174.480, the phrase "flammable solid material" would be removed and replaced with the phrase "Class 4 (flammable solid) materials".

59. The subpart I heading would be revised to read as follows:

Subpart I—Detailed Requirements for Division 5.1 (Oxidizing) Materials

§ 174.510 [Amended]

60. In § 174.510, the phrase "listed in § 173.182(b) of this subchapter" would be removed.

61. In § 174.580, the section heading would be revised to read as follows:

§ 174.580 Division 5.1 (oxidizer) materials, with a subsidiary hazard of Division 6.1 (poisonous materials), with foodstuffs.

§ 174.580 [Amended]

62. In § 174.580, the phrase "oxidizer material" would be removed and replaced with the phrase "Division 5.1 (oxidizer) material".

63. The subpart J heading would be revised to read as follows:

Subpart J—Detailed Requirements for Division 6.1 (Poisonous) Materials

§ 174.600 [Amended]

64. In § 174.600, the phrase "Poison A" would be removed and replaced with the phrase "Division 2.3 (PG I, Zone A; poisonous gas) or Division 6.1 (PG I, Zone A; poisonous liquid), Packing Group I, materials" in the section heading and regulatory text.

§ 174.615 [Amended]

65. In § 174.615, the following changes would be made:

a. In paragraph (a), the phrase "Paris green" would be removed and replaced with the phrase "copper acetoarsenite (Paris green)".

b. In paragraphs (a) and (b), the phrase "poisonous materials" would be revised to read "Division 6.1 (poisonous) materials" each place it appears.

66. In § 174.680, the section heading would be revised to read as follows:

§ 174.680 Division 6.1 (poisonous) materials with foodstuffs.

67. The subpart K heading would be revised to read as follows:

Subpart K—Detailed Requirements for Class 7 (Radioactive) Materials

§ 174.700 [Amended]

68. In § 174.700, the following changes would be made:

a. In paragraphs (c), (d), (e)(2), and (e)(3), the phrase "radioactive material" would be removed and replaced with the phrase "Class 7 (radioactive) material" each place it appears.

b. In the section heading and paragraphs (b), (c), (e) introductory text, (e)(1), and (f), the phrase "radioactive materials" would be removed and replaced with the phrase "Class 7 (radioactive) materials".

c. In paragraph (c), the phrase "closer than three feet" would be removed and replaced with the phrase "closer than 1 meter (3.3 feet)", and the phrase "nor closer than 15 feet" would be removed and replaced with the phrase "nor closer than 4.5 meters (15 feet)".

d. In paragraph (d), the phrase "at least 20 feet" would be removed and replaced with the phrase "at least 6 meters (20 feet)".

e. In paragraph (e) introductory text, the phrase "weighing 15,000 pounds" would be removed and replaced with the phrase "weighing 6,805 kg (15,002 pounds)".

f. In paragraph (e)(1), the phrase "weighing 5,000 pounds" would be removed and replaced with the phrase "weighing 2,268 kg (5,000 pounds)".

g. In paragraph (e)(3), the phrase "weighing 700 pounds" would be removed and replaced with the phrase "weighing 315 kg (694.5 pounds)".

§ 174.715 [Amended]

69. In § 174.715, the following changes would be made:

a. In paragraphs (a) and (b), the phrase "radioactive materials" would be removed and replaced with the phrase "Class 7 (radioactive) materials".

b. In paragraph (b), the phrase "at 3 feet" would be removed and replaced with the phrase "at 1 meter (3.3 feet)" and the phrase "3 inches high" would be removed and replaced with the phrase "8 cm (3.2 inches) high".

§ 174.750 [Amended]

70. In § 174.750, the following changes would be made:

a. In paragraphs (a) and (b), the phrase "radioactive materials" would be removed and replaced with the phrase "Class 7 (radioactive) materials" each place it appears.

b. In paragraph (b), the phrase "radioactive material" would be removed and replaced with the phrase "Class 7 (radioactive) material".

71. The subpart L heading would be revised to read as follows:

Subpart L—Detailed Requirements for Class 8 (Corrosive) Materials

§ 174.800 [Amended]

72. In § 174.800, the following changes would be made:

a. In the section heading, the phrase "corrosive materials" would be revised to read "Class 8 (corrosive) materials".

b. In paragraph (a), the phrase "corrosive liquids" would be revised to read "Class 8 (corrosive) materials".

c. In paragraph (a), the first and last sentences would be removed and the designation (a) would be removed.

d. Paragraphs (b) and (c) would be removed.

§ 174.810 [Amended]

73. In § 174.810, the following changes would be made:

a. In paragraph (a), the phrase "and may not be loaded or stored with explosives" would be removed.

b. In paragraph (b), the reference "§ 173.258" would be removed and replaced with the reference "§ 173.159".

§ 174.812 [Removed and Reserved]

74. Section 174.812 would be removed and reserved.

75. The subpart M heading would be revised to read as follows:

Subpart M—Detailed Requirements for Class 9 (Miscellaneous Hazardous) Materials

§ 174.840 [Amended]

76. In § 174.840, the reference "§ 173.1090" would be removed and replaced with "§ 173.216".

PART 175—CARRIAGE BY AIRCRAFT

77. The authority citation for part 175 would continue to read as follows:

Authority: 49 U.S.C. App. 1803, 1804, 1807, 1808; 49 CFR part 1.

§ 175.10 [Amended]

78. In § 175.10, the following changes would be made:

a. In paragraph (a)(4)(i), the phrase "75 ounces (net weight ounces and fluid ounces)" would be removed and replaced with the phrase "2.2 kg (77.6 net weight ounces) or 2.2 liters (74.6 fluid ounces)".

b. In paragraph (a)(4)(ii), the phrase "16 fluid ounces or 1 pound" would be removed and replaced with the phrase "475 ml (16 fluid ounces) or 0.5 kg (1.1 pound)".

c. In paragraph (a)(8), the phrase "radioactive material" would be

removed and replaced with the phrase "Class 7 (radioactive materials".

d. In paragraph (a)(13), the phrase "(dry ice)" would be removed and replaced with the phrase "(dry ice; i.e., Class 9 material)"; the phrase "5 pounds" would be removed and replaced with the phrase "2.3 kg (5.07 pounds)" both places it appears; and the references "§ 173.615(a)" would be removed and replaced with the phrase "§ 173.217".

e. In paragraph (a)(14)(vii), the phrase "ten feet" would be removed and replaced with the phrase "3 meters (9.8 feet)".

f. In paragraph (a)(17), the phrase "(dry ice)" would be removed and replaced with the phrase "(dry ice; i.e., Class 9 material)" and the phrase "4 pounds" would be removed and replaced with the phrase "2 kg (4.4 pounds)".

g. In paragraph (a)(19), the reference "§ 173.260(d)" would be removed and replaced with the reference "§ 173.159(d)".

§ 175.25 [Amended]

79. In § 175.25, in paragraph (a)(1), the phrase "75 ounces" would be removed and replaced with the phrase "2.2 kg (77.6 ounces)".

§ 175.30 [Amended]

80. In § 175.30, the following changes would be made:

a. In paragraph (c)(2), the phrase "radioactive materials" would be removed and replaced with the phrase "Class 7 (radioactive) materials".

b. In paragraph (d)(2), the phrase "(carbon dioxide, solid)" would be removed and replaced with the phrase "(carbon dioxide, solid, Class 9 materials)".

§ 175.33 [Amended]

81. In § 175.33, paragraphs (a)(3) and (a)(6), the phrase "radioactive materials" would be removed and replaced with the phrase "Class 7 (radioactive) materials".

§ 175.45 [Amended]

82. In § 175.45, the following changes would be made:

a. In paragraph (a)(2), the phrase "radioactive materials" would be removed and replaced with the phrase "Class 7 (radioactive) materials".

b. In paragraph (a)(3), the phrase "etiologic agents" would be removed and replaced with the phrase "Division 6.2 (etiologic or infectious substance) materials" both places it appears.

§ 175.75 [Amended]

83. In § 175.75, the following changes would be made:

a. In paragraph (a)(2), the phrase "50 pounds net weight" would be removed and replaced with the phrase "25 kg (55 pounds) net weight"; the phrase "150 pounds net weight" would be removed and replaced with the phrase "75 kg (165 pounds) net weight"; and the phrase "nonflammable compressed gas" would be removed and replaced with the phrase "Division 2.2 (nonflammable compressed gas) materials".

b. In paragraphs (a)(3) introductory text and (a)(3)(ii), the phrase "radioactive materials" would be removed and replaced with the phrase "Class 7 (radioactive) materials".

c. In paragraph (b), the phrase "ORM material" would be removed and replaced with the phrase "Class 9 (miscellaneous hazardous) materials, ORM–D or ORM–E materials".

§ 175.81 [Amended]

84. In § 175.81, paragraph (b), the phrase "radioactive materials" would be removed and replaced with the phrase "Class 7 (radioactive) materials".

§ 175.85 [Amended]

85. In § 175.85, the following changes would be made:

a. In paragraph (c)(1)(i), the phrase "Radioactive (ICAO Class 7) materials" would be removed and replaced with the phrase "Class 7 (radioactive) materials".

b. In paragraph (c)(1)(ii), the phrase "Poison B (ICAO Division 6.1) liquids and solids" would be removed and replaced with the phrase "Division 6.1 (poisonous or tear gas substances) materials".

c. Paragraphs (c)(1)(iii) and (c)(1)(vii) would be removed and paragraphs (c)(1)(iv) through (c)(1)(vi) would be redesignated as (c)(1)(iii) through (c)(1)(v).

d. In newly designated paragraph (c)(1)(iii), the phrase 'Etiologic (ICAO Division 6.2) agents" would be removed and replaced with the phrase "Division 6.2 (etiologic or infectious substance) materials".

e. In newly designated paragraph (c)(1)(iv), the phrase "Flammable liquids" would be removed and replaced with the phrase "Class 3 (flammable liquid) materials" and the phrase "73 °F. (23 °C.)" would be removed and replaced with the phrase "23 °C (73.4 °F)".

86. In § 175.85, newly designated paragraph (c)(1)(v) would be revised to read as follows:

§ 175.85 Cargo location.

* * * * *

(c) * * *

(1) * * *

(v) Class 9 (miscellaneous hazardous) materials, ORM–D and ORM–E materials.

* * * * *

§ 175.90 [Amended]

87. In § 175.90, paragraph (d) introductory text, the phrase "an etiologic agent" would be removed and replaced with the phrase "a Division 6.2 (etiologic or infectious substance) material".

§ 175.305 [Amended]

88. In § 175.305, paragraph (a), the reference "§ 173.120" would be removed and replaced with the reference "§ 173.220".

§ 175.310 [Amended]

89. In § 175.310, the following changes would be made:

a. In the introductory paragraph, the phrase "more than 20 gallons" would be removed and replaced with the phrase "more than 76 liters (20.1 gallons)".

b. In paragraph (c)(1), the phrase "5 gallons capacity" would be removed and replaced with the phrase "20 liters (5.3 gallons) capacity"; the phrase "DOT Specification 12B fiberboard box" would be removed and replaced with the phrase "UN4G fiberboard box"; the phrase "DOT Specification 15A, 15B, 15C, 16A, 19A or 19B wooden box" would be removed and replaced with the phrase "UN4C1 wooden box"; and the phrase "at least one-half inch thickness" would be removed and replaced with the phrase "at least 1.3 cm (0.5 inch) thickness".

c. In paragraph (c)(2), the phrase "10 gallons capacity" would be removed and replaced with the phrase "40 liters (10.6 gallons) capacity"; the phrase "DOT Specification 15A, 15B, 15C, 16A, 19A or 19B wooden box" would be removed and replaced with the phrase "UN4C1 wooden box"; and the phrase "at least one-half inch thickness" would be removed and replaced with the phrase "at least 1.3 cm (0.5 inch) thickness".

d. In paragraph (c)(3), the phrase "DOT Specification 17E container" would be removed and replaced with the phrase "UN1A1 container" and the phrase "5 gallons capacity" would be removed and replaced with the phrase "20 liters (5.3 gallons) capacity".

90. In § 175.320, paragraph (a), the table would be revised to read as follows:

§ 175.320 Cargo aircraft only; only means of transportation.

(a) * * *

Material	Class	Conditions
Detonators and detonating primer	Division 1.1 or 1.2 (Class A) explosives	Permitted only when no other harzardous material is aboard the aircraft.
Detonators and detonating primers	Division 1.4 (Class C) explosives	With the exception of Division 1.1 or 1.2 detonators and detonating primers, permitted only when there are no Division 1.1 or 1.2 (Class A) explosives aboard aircraft.
Fuel, aviation, turbine engine; methyl alcohol; or toluene.	Class 3 (flammable liquid)	Permitted in metal drums authorized for Packing Group I or II liquid hazardous materials having rated capacities or 220 liters (58.1 gallons) or less. May not be transported in the same aircraft with Class 1 (explosive), Class 5 (oxidizing), or Class 8 (corrosive) materials. Permitted in installed tanks each having a capacity of more than 450 liters (118.9 gallons) subject to the conditions specified in paragraph (c) of this section.
Gasoline	Class 3 (flammable liquid)	Permitted in metal drums having rated capacities of 220 liters (58.1 gallons) or less. May not be transported in the same aircraft with materials classed as Class 1 (explosive), Class 5 (oxidizing), or Class 8 (corrosive) materials. Permitted in installed tanks each having a capacity of 450 liters (118.9 gallons). Subject to the conditions specified in paragraph (c) of this section.
High explosives	Division 1.1 or 1.2 (Class A) explosives	Limited to Class 1 (explosive) material to be used for blasting. Permitted only when no other cargo is aboard the aircraft or when being transported in the same aircraft with an authorized shipment of any one or more of any of the following materials to be used for blasting: Ammonium nitrate-fuel oil mixures. Blasting agent n.o.s. Detonating cord. Propellant explosive (solid) (Division 1.3) (water gels only) Propellant explosive (liquid) (Division 1.3) (water gels only)
Oil n.o.s.; petroleum oil or petroleum oil, n.o.s.	Class 3 (flammable liquid)	Permitted in metal drums having rated capacities of 220 liters (58.1 gallons) or less. May not be transported in the same aircraft with materials classed as Class 1 (explosive), Class 5 (oxidizing), or Class 8 (corrosive) materials. Permitted in installed tanks each having a capacity of 450 liters (118.9 gallons). Subject to the conditions specified in paragraph (c) of this section.
Combustible liquid n.o.s.	Class 3 (combustible)	Permitted in installed tanks each having a capacity of more than 450 liters (118.9 gallons) subject to the conditions specified in paragraph (c) of this section.

§ 175.320 [Amended]

91. In § 175.320, the following changes would be made:

a. In paragraph (b)(8), the phrase "Class A explosives" would be removed and replaced with the phrase "Division 1.1 or 1.2 (explosive) materials".

b. In paragraph (b)(9), the phrase "within 50 feet" would be removed and replaced with the phrase "within 15 meters (49.2 feet)".

c. In paragraph (c) introductory text, the phrase "flammable liquids and combustible liquids" would be removed and replaced with the phrase "Class 3 (flammable and combustible liquid) materials" and the phrase "110 gallons" would be removed and replaced with the phrase "420 liters (110.9 gallons)".

d. In paragraph (c)(4)(iii), the phrase "flammable or combustible liquid" would be removed and replaced with the phrase "Class 3 (flammable or combustible liquid) materials" both places it appears and the phrase "within 50 feet" would be removed and replaced with the phrase "15 meters (49.2 feet)."

92. In § 175.630, the section heading would be revised to read as follows:

§ 175.630 Special requirements for Division 6.1 (poisonous or irritating) materials and Division 6.2 (etiologic or infectious substances) materials.

§ 175.630 [Amended]

93. In § 175.630, the following changes would be made:

a. In paragraph (a), the phrase "ETIOLOGIC AGENT label" would be removed and replaced with the phrase "INFECTIOUS SUBSTANCE label" and the phrase "poisons or etiologic agents" would be removed and replaced with the phrase "Division 6.1 (poisonous or irritating) materials or Division 6.2 (etiologic or infectious substance) materials" both places it appears.

b. In paragraph (b), the phrase "such poisons" would be removed and replaced with the phrase "such Division 6.1 (poisonous) materials".

94. In § 175.640, the section heading would be revised to read as follows:

§ 175.640 Special requirements for Class 9 (miscellaneous hazardous) material.

§ 175.640 [Amended]

95. In § 175.640, the reference "§ 173.1090' would be removed and replaced with "§ 173.216".

§ 175.700 [Amended]

96. In § 175.700, the following changes would be made:

a. In the section heading and paragraph (b), the phrase "radioactive materials" would be removed and replaced with the phrase "Class 7 (radioactive) materials" each place it appears.

b. In paragraph (c), the phrase "radioactive material" would be removed and replaced with the phrase "Class 7 (radioactive) material".

§ 175.701 [Amended]

97. In § 175.701, in the section heading and paragraphs (b)(1) and (b)(2), the phrase "radioactive materials" would be removed and replaced with the phrase "Class 7 (radioactive) materials" each place it appears.

§ 175.702 [Amended]

98. In § 175.702, the following changes would be made:

a. In the section heading and paragraphs (b)(2)(i) and (b)(2)(iv), the phrase "radioactive materials" would be removed and replaced with the phrase "Class 7 (radioactive) materials"

b. In paragraph (a) and (b)(2)(iii), the phrase "20 feet (6 meters)" would be removed and replaced with the phrase "6 meters (20 feet)".

c. In paragraph (b)(2)(i), the phrase "30 feet (9 meters)" would be removed and replaced with the phrase "9 meters (29.5 feet)".

§ 175.703 [Amended]

99. In § 175.703, the following changes would be made:

a. In the section heading and paragraphs (a), (b), (c) introductory text, and (d)(3), the phrase "radioactive materials" would be removed and replaced with the phrase "Class 7 (radioactive) materails".

b. In paragraph (c)(1), the phrase "radioactive material" would be removed and replaced with the phrase "Class 7 (radioactive) material".

§ 175.705 [Amended]

100. In § 175.705, the section heading and paragraph (a), the phrase "radioactive materials" would be removed and replaced with the phrase "Class 7 (radioactive) materials" each place it appears.

PART 177—CARRIAGE BY PUBLIC HIGHWAY

101. The authority citation for part 177 would continue to read as follows:

Authority: 49 U.S.C. App. 1803, 1804, 1805, 49 CFR part 1.

§ 177.806 [Amended]

102. In § 177.806, paragraph (b), the phrase "radioactive materials" would be removed and replaced with the phrase "Class 7 (radioactive) materials".

§ 177.810 [Amended]

103. In § 177.810, the phrase "radioactive materials" would be removed and replaced with the phrase "Class 7 (radioactive) materials" both places it appears.

§ 177.811 [Amended]

104. In § 177.811, paragraph (a), the phrase "(other than explosives)" would be removed and replaced with the phrase "(other than Class 1 (explosive) materials)".

§ 177.816 [Amended]

105. In § 177.816, paragraphs (a) and (b)(2), the phrase "flammable cryogenic liquid" would be removed and replaced with the phrase "Division 2.1 (flammable cryogenic liquid) materials".

§ 177.818 [Amended]

106. In § 177.818, the following changes would be made:

a. In the section heading, the phrase "flammable cryogenic liquids" would be removed and replaced with the phrase "Division 2.1 (flammable cryogenic liquid) materials".

b. In paragraph (a) introductory text, the phrase "flammable cryogenic liquid" would be removed and replaced with the phrase "Division 2.1 (flammable cryogenic liquid) material", and the phrase "exceeding 125 gallons" would be removed and replaced with the phrase "exceeding 450 liters (118.9 gallons)".

§ 177.821 [Amended]

107. In § 177.821, the following changes would be made:

a. In paragraph (d), the phrase "high explosive" would be removed and replaced with the phrase "Division 1.1 or 1.2 (high explosive) material" both places it appears and the phrase "the explosive" would be removed and replaced with the phrase "the Class 1 (explosive) material" both places it appears.

b. In paragraph (f), the phrase "100 pounds net weight" would be removed and replaced with the phrase "45 kg (99.2 pounds) net weight"; in the first sentence of paragraph (f), the phrase "flammable solid" would be removed and replaced with the phrase "Class 4 (flammable solid) material"; and the phrase "not exceed 8 pounds" would be removed and replaced with the phrase "not exceed 3.6 kg (7.9 pounds)".

§ 177.825 [Amended]

108. In § 177.825, the following changes would be made:

a. In the section heading and paragraphs (a) introductory text, (b) introductory text, (b)(2)(iii), (c) introductory text, (d) introductory text, (d)(1)(i), (d)(1)(ii), and (d)(2)(iv), the phrase "radioactive materials" would be removed and replaced with the phrase "Class 7 (radioactive) materials".

b. In paragraphs (a) introductory text, (f) introductory text, and (f)(3), the phrase "radioactive material" would be removed and replaced with the phrase "Class 7 (radioactive) material".

§ 177.826 [Amended]

109. In § 177.826, the following changes would be made:

a. In the section heading and paragraphs (b)(2) and (b)(3), the phrase "flammable cryogenic liquids" would be removed and replaced with the phrase "Division 2.1 (flammable cryogenic liquid) materials".

b. In paragraphs (a) and (b)(3), the phrase "flammable cryogenic liquid" would be removed and replaced with the phrase "Division 2.1 (flammable cryogenic liquid) material".

§ 177.834 [Amended]

110. In § 177.834, the following changes would be made:

a. In paragraph (a), the phrase "flammable liquid, compressed gas, corrosive material, poisonous material, or radioactive material" would be removed and replaced with the phrase "Class 3 (flammable liquid), Class 2 (gases), Class 8 (corrosive), Division 6.1 (poisonous), or Class 7 (radioactive) material".

b. In paragraph (c), the phrase "explosive, flammable liquid, flammable solid, oxidizing material, or flammable compressed gas" would be removed and replaced with the phrase "Class 1 (explosive), Class 3 (flammable liquid), Class 4 (flammable solid), Class 5 (oxidizing), or Division 2.1 (flammable gas) materials".

c. In paragraph (d), the phrase "explosive, flammable liquid, flammable solid oxidizing material, or flammable compressed gas" would be removed and replaced with the phrase "Class 1 (explosive), Class 3 (flammable liquid), Class 4 (flammable solid), Class 5 (oxidizing), or Division 2.1 (flammable gas) materials".

d. In paragraph (f), the phrase "any explosive" would be removed and replaced with the phrase "any Class 1 (explosive) material".

e. In paragraph (g), the phrase "explosives, flammable liquids, flammable solids, oxidizing materials, corrosive materials, compressed gases, and poisonous liquids or gases" would be removed and replaced with the phrase "Class 1 (explosive), Class 3 (flammable liquid), Class 4 (flammable solid), Class 5 (oxidizing), Class 8 (corrosive), Class 2 (gases) and Division 6.1 (poisonous) materials".

f. In paragraph (l)(1), the word "explosives" would be removed and replaced with the phrase "Class 1 (explosive) materials" both places it appears.

g. In paragraphs (l)(2)(i) introductory text and (l)(2)(iii)(A) introductory text, the phrase "flammable liquid or flammable gas" would be removed and replaced with the phrase "Class 3 (flammable liquid) or Division 2.1 (flammable gas) materials" and in paragraph (l)(2)(iii)(B) introductory text, the phrase "Flammable liquid or flammable gas" would be replaced with "Class 3 (flammable liquid) or Division 2.1 (flammable gas) materials".

h. In paragraph (l)(2)(i)(B), the phrase "130 °F. (54 °C)" would be removed and replaced with the phrase "54 °C (130 °F)", and the phrase "60 °F.(15.6 °C.)" would be removed and replaced with the phrase "16 °C (60.8 °F)".

i. In paragraph (l)(2)(iii)(A)(*4*), the phrase "130 °F.(54 °C.)" would be removed and replaced with the phrase "54 °C (130 °F)".

§ 177.835 [Amended]

111. In § 177.835, the following changes would be made:

a. In paragraph (c)(4)(i), the phrase "Initiating explosive" would be removed and replaced with the phrase "Substances, explosive, n.o.s., Class 1.1A (explosive) material (Initiating explosive)".

b. In paragraphs (g) introductory text, (g)(2)(i), and (j), the phrase "class A or class B explosive" would be removed and replaced with the phrase "Division 1.1, 1.2. or 1.3 (Class A or Class B explosive) material".

c. In paragraph (f), the phrase "class A or class B explosives" would be removed and replaced with the phrase "Division 1.1, 1.2, or 1.3 (Class A or Class B explosive) materials".

d. In paragraph (c) introductory text, the phrase "Class A explosives" would be removed and replaced with the phrase "Division 1.1 or 1.2 (Class A explosive) materials".

e. In paragraph (g) introductory text, the phrase "class C explosive" would be removed and replaced with the phrase "Division 1.4 (Class C explosive) material".

f. In the section heading and paragraphs (c) introductory text, (f), and (i), the word "Explosives" would be removed and replaced with the phrase "Class 1 (explosive) materials" each place it appears.

g. In paragraphs (a), (b) introductory text, (b)(1), (e), (f), (h), (j), (k), and (m), the word "explosives" would be removed and replaced with the phrase "class 1 (explosive) materials" each place it appears.

h. In paragraphs (e), (i), (k), and (m), the word "explosive" would be removed and replaced with the phrase "Class 1 (explosive) material" each place it appears.

i. In paragraph (c)(4)(ii), the phrase " radioactive materials" would be removed and replaced with the phrase "Class 7 (radioactive) materials".

j. In paragraph (c)(4)(iii), the phrase "Class A or B poisons" would be removed and replaced with the phrase "Division 2.3 (poisonous gas) or Division 6.1 (poisonous) materials".

k. In paragraphs (g)(2) introductory text and (g)(3)(i), the references "§ 173.103(d)" and "§ 173.66" would be removed and replaced with the reference "§ 173.63".

l. In paragraph (g)(2)(ii), the phrase "24 inches" would be removed and replaced with the phrase "61 cm (24 inches)".

m. In paragraph (h), the phrase "other than as defined in § 173.53(e) of this subchapter," would be removed.

n. In paragraph (k), the phrase "other than as defined in § 173.53(e) of this chapter," would be removed.

o. In paragraph (m), the phrase "as defined in § 173.53(e) of this subchapter," would be removed.

p. In paragraph (k), the phrase "900 quarts" would be removed and replaced with the phrase "850 liters (898.2 quarts)"; the phrase "10 quarts" would be removed and replaced with the phrase "9.5 liters (10 quarts)"; and the phrase "7,500 pounds" would be removed and replaced with the phrase "3,400 kg (7,495.7 pounds)".

§ 177.836 [Amended]

112. In § 177.836, the word "explosive" would be removed and replaced with the phrase "Class 1 (explosive) material".

§ 177.837 [Amended]

113. In § 177.837, the following changes would be made:

a. In the section heading, the phrase "Flammable liquids" would be removed and replaced with the phrase "Class 3 (flammable liquid) materials".

b. In paragraph (b), the phrase "flammable liquids" would be removed and replaced with the phrase "Class 3 (flammable liquid) materials".

c. In paragraphs (a) and (b), the phrase "flammable liquid" would be removed and replaced with the phrase "Class 3 (flammable liquid) material".

d. Paragraph (d) would be removed and paragraph (e) would be redesignated as paragraph (d).

e. In newly designated paragraph (d) introductory text, the phrase "flammable liquid" would be removed and replaced with the phrase "Class 3 (flammable liquid) material".

114. In § 177.838, the section heading would be revised to read as follows:

§ 177.838 Class 4 (flammable solid) materials, Class 5 (oxidizing) materials, and Division 4.2 (pyroforic liquid) materials.

§ 177.838 [Amended]

115. In § 177.838, the following changes would be made:

a. In paragraphs (a) and (b), the phrase "flammable solids or oxidizing materials" would be removed and replaced with the phrase "Class 4 (flammable solid) or Class 5 (oxidizing) materials" each place it appears.

b. In paragraph (c), the phrase "4 inches wide" would be removed and replaced with the phrase "10 cm (3.9 inches) wide" and the phrase "6 inches" would be removed and replaced with the phrase "15 cm (5.9 inches)".

c. In paragraph (e)(2), the phrase "Flammable liquides" would be removed and replaced with the phrase "Class 3 (flammable liquid) materials".

d. In paragraph (f), the phrase "listed in § 173.182(b) of this subchapter" would be removed.

e. In paragraph (g), the phrase "not exceeding 100 pounds" would be removed and replaced with the phrase "not exceeding 45 kg (99.2 pounds)", the phrase "flammable solid" would be removed and replaced with the phrase "Class 4 (flammable solid) material", the phrase "not exceed 8 pounds" would be removed and replaced with the phrase "not exceed 3.6 kg (7.9 pounds)", the phrase "DOT–12A65, 12B65, or 12H65 fiberboard boxes" would be removed and replaced with the phrase "UN4G fiberboard boxes", and the phrase "not exceed 16 pounds" would be removed and replaced with the phrase "not exceed 7.26 kg (16.01 pounds)".

116. In § 177.838, a new paragraph (h) would be added to read as follows:

(h) Division 4.2 (pyroforic liquid) materials in cylinders. Cylinders containing Division 4.2 (pyroforic liquid) materials, unless packed in a strong box or case and secured therein to protect valves, must be loaded with all valves and safety relief devices in the vapor space. All cylinders must be secured so that no shifting occurs in transit.

§ 177.839 [Amended]

117. In § 177.839, the following changes would be made:

a. In the section heading and paragraphs (b) and (d), the phrases "Corrosive liquids", "corrosive liquids", "Corrosives" and "corrosives" would be removed and replaced with the phrase "Class 8 (corrosive) materials" each place they appear.

b. In paragraph (a), the phrases "carboy or other" and "carboys or other" would be removed.

c. In paragraph (b), the phrases "Carboys and", "carboys and", and "carboys or" would be removed.

§ 177.840 [Amended]

118. In § 177.840, the following changes would be made:

a. In the section heading, the phrase "Compressed gases" would be removed and replaced with the phrase "Class 2 (gases) materials".

b. In paragraphs (a) introductory text, (a)(1), and (b) introductory text, the phrase, "compressed gases" would be removed and replaced with the phrase "Class 2 (gases) materials".

c. In paragraph (d), the phrase "flammable compressed gas" would be removed and replaced with the phrase "Division 2.1. (flammable gas) material".

d. In paragraphs (h) introductory text, (i), and (j) introductory text, the phrase "flammable cryogenic liquid" would be removed and replaced with the phrase "Division 2.1 (flammable cryogenic liquid) material".

e. In paragraphs (h) introductory text, the phrase "exceeding 125 gallons" would be removed and replaced with the phrase "exceeding 450 liters (118.9 gallons)".

119. In § 177.841, the section heading would be revised to read as follows:

§ 177.841 Division 6.1 (poisonous or tear gas substances) and Division 2.3 (poisonous gas) materials.

§ 177.841 [Amended]

120. In § 177.841, the following changes would be made:

a. Paragraph (a)(1) would be removed, the text in paragraph (a)(2) would be added as the last sentence in paragraph (a) introductory text, and the designation (a)(2) would be removed.

b. Paragraph (b) would be removed and reserved.

c. In paragraph c, the phrase "Class A poison or irritating materials" would be removed and replaced with the phrase "Division 2.3 (poisonous gas) or Division 6.1 (poisonous or tear gas substances) materials".

d. In paragraph (c), the phrase "Class A poison or irritating material" would be removed and replaced with the phrase "Division 2.3 (poisonous gas) or Division 6.1 (poisonous or tear gas substances) material".

e. In paragraph (d) introductory text, the word "poisons" would be removed and replaced with the phrase "Division 6.1 (poisonous) materials".

f. In paragraph (e), the phrase "labeled 'Poison', 'Poison gas', or 'Irritant' " would be removed and replaced with the phrase "labeled 'POISON' or 'POISON GAS' ".

§ 177.842 [Amended]

121. In § 177.842, the following changes would be made:

a. In the section heading, the phrase "Radioactive material" would be removed and replaced with the phrase "Class 7 (radioactive) material".

b. In paragraphs (b) and (f), the phrase "radioactive material" would be removed and replaced with the phrase "Class 7 (radioactive) material".

c. In paragraphs (a) and (e), the phrase "radioactive materials" would be removed and replaced with the phrase "Class 7 (radioactive) materials".

d. In paragraph (f), the phrase "at least 20 feet" would be removed and replaced with the phrase "at least 6 meters (20 feet)".

§ 177.843 [Amended]

122. In § 177.843, the following changes would be made:

a. In paragraph (a), the phrase "radioactive materials" would be removed and replaced with the phrase "Class 7 (radioactive) materials".

b. In paragraphs (b) and (c), the phrase "radioactive material" would be removed and replaced with the phrase "Class 7 (radioactive) material".

c. In paragraph (b), the phrase "3 feet" would be removed and replaced with the phrase "1 meter (3.3 feet)", and the phrase 1 "3 inches high" would be removed and replaced with the phrase "7.5 cm (3 inches) high".

123. In § 177.844, the section heading would be revised to read as follows:

§ 177.844 Class 9 (miscellaneous hazardous) materials.

§ 177.844 [Amended]

124. In § 177.844, the reference "§ 173.1090" would be removed and replaced with the reference "§ 173.216".

125. § 177.848 would be revised to read as follows:

§ 177.848 Segregation of hazardous materials.

(a) This section applies to materials which meet one or more of the hazard classes defined in this subchapter and are:

(1) In packages which require labels in accordance with Part 172 of this subchapter;

(2) In a compartment within a multi-compartmented cargo tank; or

(3) In a portable tank loaded in a transport vehicle or freight container.

(b) In addition to the provisions of paragraph (d) of this section, when a transport vehicle is to be transported by vessel, other than a ferry vessel, hazardous materials on or within that vehicle shall be stowed and segregated in accordance with §§ 176.83 and 176.144 of this subchapter.

(c) In addition to the provisions of paragraph (d) of this section, cyanides or cyanide mixtures shall not be loaded or stored with acids.

(d) Hazardous materials shall not be loaded, transported, or stored together, except as provided in this section and in accordance with the following Table.

SEGREGATION TABLE FOR HAZARDOUS MATERIALS

Class or division		Notes	1.1 1.2	1.3	1.4	1.5	1.6	2.1	2.2	2.3 gases packing group I only	3	4.1	4.2	4.3	5.1	5.2	6.1 liquids packing group I only	7	8 liquids only
Explosives	1.1 and 1.2	A	*	*	*	*	*	X	X	X	X	X	X	X	X	X	X	X	X
Explosives	1.3		*	*	*	*	*	X		X	X		X	X	X	X	X		X
Explosives	1.4		*	*	*	*	*	O		O	O		O				O		O
Very insensitive explosives	1.5		*	*	*	*	*	X	X	X	X	X	X	X	X	X	X	X	X
Extremely insensitive explosives	1.6		*	*	*	*	*												
Flammable gases	2.1		X	X	O	X				O			O	O	O	O	O	O	O
Non-toxic, non-flammable gases	2.2		X			X													
Poisonous gases: packing group I only.	2.3		X	X	O	X		O			X	X	X	X	X	X			X
Flammable liquids	3	B	X	X	O	X				X		O	O	O	O	O	X		O
Flammable solids	4.1	B	X			X				X	O						X		O
Spontaneously combustible materials.	4.2		X	X	O	X		O		X	O						X		X
Dangerous when wet materials	4.3		X	X		X		O		X	O						X		X
Oxidizers	5.1	A, B	X	X		X		O		X	O						X		O
Organic peroxides	5.2	B	X	X		X		O		X	O						X		O
Poisonous liquids: packing group I only.	6.1		X	X	O	X		O			X	X	X	X	X	X			X
Radioactive materials	7		X			X		O											
Corrosive liquids	8	B	X	X	O	X		O		X	O	O	X	X	O	O	X		

(e) Instructions for using the Segregation Table for Hazardous Materials set forth in paragraph (d) of this section are as follows:

(1) The letter "X" in the Table means that these materials shall not be loaded, transported, or stored together in the same transport vehicle or storage facility during the course of transportation.

(2) The letter "O" in the Table means that these materials shall not be loaded, transported, or stored together in the same transport vehicle or storage facility during the course of transportation, unless separated by a distance of 1.2 m (4 feet) in all directions.

(3) The "*" in the Table means that segregation among different Class 1 (explosive) materials is governed by the Compatibility Table in paragraph (f) of this section.

(4) The notes in the second column of the Table mean the following:

(i) "A" means that ammonium nitrate fertilizer may be loaded or stored with Division 1.1 (Class A explosive) materials.

(ii) "B" means that the materials for which an "O" appears in the Table may be loaded and transported together if each class or division is separtely palletized at a minimum height of 10.6 cm (4 inches) off the floor of the transport vehicle and separated by a distance of 1.2 m (4 feet) in all directions.

(f) Class 1 (explosive) materials shall not be loaded, transported, or stored together, except as provided in this section and in accordance with the following Table.

COMPATIBILITY TABLE FOR CLASS 1 (EXPLOSIVE) MATERIALS

Compatibility Group	A	B	C	D	E	F	G	H	J	K	L	N	S
A		X	X	X	X	X	X	X	X	X	X	X	X
B	X		X	X	X	X	X	X	X	X	X	X	
C	X	X		2	2	X	X	X	X	X	X	3	
D	X	X	2		2	X	X	X	X	X	X	3	
E	X	X	2	2		X	X	X	X	X	X	3	
F	X	X	X	X	X		X	X	X	X	X	X	
G	X	X	X	X	X	X		X	X	X	X	X	
H	X	X	X	X	X	X	X		X	X	X	X	
J	X	X	X	X	X	X	X	X		X	X	X	
K	X	X	X	X	X	X	X	X	X		X	X	
L	X	X	X	X	X	X	X	X	X	X	1	X	X
N	X	X	3	3	3	X	X	X	X	X	X		
S	X										X		

(g) Instructions for using the Compatibility Table for class 1 (explosive) materials set forth in paragraph (f) of this section are as follows:

(1) The letter "X" in the Table means that explosives of different compatibility groups shall not be carried on the same transport vehicle.

(2) The notes in the Table mean the following:

(i) "1" means an explosive from compatibility group L shall only be carried on the same transport vehicle with an identical explosive.

(ii) "2" means any combination of explosives from compatibility group C, D, or E is assigned to compatibility group E.

(iii) "3" means any combination of explosives from compatibility group C, D, or E with those in compatibility group N is assigned to compatibility group D.

(h) With one exception, explosives of the same compatibility group but of different divisions may be transported together, provided that the whole shipment is handled and transported as though its entire contents were of the lower division. For example, a mixed shipment of Division 1.2 (Class A explosive) materials and Division 1.4 (Class C explosive) materials, both of compatibility group D, must be handled and transported as Division 1.2 (Class A explosive) materials. However, when Division 1.5 (blasting agent) materials, compatibility group D, are transported in the same freight container as Division 1.2 (Class A explosive) materials, compatibility group D, the shipment must be handled and transported as Division 1.1 (Class A explosive) materials, compatibility group D.

§ 177.853 [Amended]

126. In § 177.853, paragraph (c), the word "explosives" would be removed and replaced with the phrase "Class 1 (explosive) materials" each place it appears.

§ 177.854 [Amended]

127. In § 177.854, the following changes would be made:

a. In paragraph (f) introductory text, the phrase "flammable liquids, flammable solids, oxidizing materials, corrosive materials, compressed gases, or poisons" would be removed and replaced with the phrase "Class 3 (flammable liquid), Class 4 (flammable solid), Class 5 (oxidizing), Class 8 (corrosive), Class 2 (gases), or Division 6.1 (poisonous) materials".

b. In paragraph (f)(1), the phrase "flammable liquids or flammable compressed gases and not transporting explosives, Class A, or Class B" would be removed and replaced with the phrase "Class 3 (flammable liquid) or Division 2.1 (flammable gas) materials and not transporting Division 1.1, 1.2, or 1.3 (Class A or B explosive) materials".

c. In paragraph (f)(2), the phrase "flammable liquids or flammable compressed gases" would be removed and replaced with the phrase "Class 3 (flammable liquid) or Division 2.1 (flammable gas) materials", and the phrase "explosives Class A or Class B" would be removed and replaced with the phrase "Division 1.1, 1.2, or 1.3 (explosive) materials".

d. In paragraph (g)(2)(iv), the phrase "explosives A or B, flammable liquids or flammable gases" would be removed and replaced with the phrase "Division 1.1, 1.2, or 1.3 (Class A or B explosive), Class 3 (flammable liquid), or Division 2.1 (flammable gas) materials".

e. In paragraph (h), the phrase "flammable liquid or poisonous liquid" would be removed and replaced with the phrase "Class 3 (flammable liquid) or Division 6.1 (poisonous liquid) material".

§ 177.855 [Amended]

128. In § 177.855, the following changes would be made:

a. In the section heading and paragraphs (a), (b), (c), and (f), the word "explosives" would be removed and replaced with the phrase "Class 1

(explosive) materials" both places it appears.

b. In paragraphs (c) and (e), the word "*Explosives*" would be removed and replaced with the phrase "Class 1 (explosive) materials" each place it appears.

c. In paragraphs (a), (b), (c), and (f), the word "explosive" would be removed and replaced with the phrase "Class 1 (explosive) material".

d. In paragraph (a), the phrase "200 feet" would be removed and replaced with the phrase "61 meters (200.1 feet)" both places it appears.

e. In paragraph (d), Note 1, the phrase "1 ounce" would be removed and replaced with the phrase "30 grams (1.1 ounce)"; the phrase 7½ fluid ounces" would be removed and replaced with the phrase "222 ml (7.5 fluid ounces); the phrase "2 fluid ounces" would be removed and replaced with the phrase "60 ml (2 fluid ounces)"; and the phrase "3 fluid ounces" would be removed and replaced with the phrase "90 ml (3 fluid ounces)".

§ 177.856 [Amended]

129. In § 177.856, the following changes would be made:

a. In the section heading and paragraph (d), the phrase "flammable liquids" would be removed and replaced with the phrase "Class 3 (flammable liquid) materials".

b. In paragraphs (a), (b), and (d), the phrase "flammable liquid" would be removed and replaced with the phrase "Class 3 (flammable liquid) material".

§ 177.857 [Amended]

130. In § 177.857, the following changes would be made:

a. In the section heading and paragraph (b), the phrase "flammable solids and oxidizing materials" would be removed and replaced with the phrase "Class 4 (flammable solid) and Class 5 (oxidizing) materials".

b. In paragraphs (a) and (c), the phrase "flammable solid and oxidizing material" would be removed and replaced with the phrase "Class 4 (flammable solid) and Class 5 (oxidizing) material".

§ 177.858 [Amended]

131. In § 177.858, the following changes would be made:

a. In the section heading and paragraph (a), the phrase "corrosive materials" would be removed and replaced with the phrase "Class 8 (corrosive) materials".

b. In paragraphs (a) and (b)(2), the phrase "corrosive liquid" would be removed and replaced with the phrase "Class 8 (corrosive) material".

c. In paragraph (b) introductory text, the phrase "corrosive liquids" would be removed and replaced with the phrase "Class 8 (corrosive) materials".

§ 177.859 [Amended]

132. In § 177.859, the following changes would be made:

a. In the section heading, the phrase "compressed gases" would be removed and replaced with the phrase "Class 2 (gases) materials".

b. In paragraph (a), the phrase "compressed gas" would be removed and replaced with the phrase "Class 2 (gases) material".

c. In paragraph (b), the phrase "flammable gas" would be removed and replaced with the phrase "Division 2.1 (flammable gas) material".

d. In paragraph (b), the phrase "flammable compressed gas" would be removed and replaced with the phrase "Division 2.1 (flammable gas) material" each place it appears.

§ 177.860 [Amended]

133. In § 177.860, the following changes would be made:

a. In the section heading, the word "poisons" would be removed and replaced with the phrase "Division 6.1 (poisonous) or Division 2.3 (poisonous gas) materials".

b. In paragraph (a) introductory text, the phrase "any poison", would be removed and replaced with the phrase "any Division 6.1 (poisonous) or Division 2.3 (poisonous gas) materials", the phrase "poison, whether flammable or nonflammable" would be removed and replaced with the phrase "Division 6.1 (poisonous) or Division 2.3 (poisonous gas) materials, whether flammable or nonflammable"; and the phrase "poison in powdered form" would be removed and replaced with the phrase "Division 6.1 (poisonous) materials in powdered form".

c. In paragraph (a)(1), the phrase "poison (class A or B)" would be removed and replaced with the phrase "Division 6.1 (poisonous) or Division 2.3 (poisonous gas) materials", and the phrase "such poisons" would be removed and replaced with the phrase "such Division 6.1 (poisonous) or Division 2.3 (poisonous gas) materials".

d. In paragraph (b), the phrase "poison which is also flammable" would be removed and replaced with the phrase "Division 6.1 (poisonous) or Division 2.3 (poisonous gas) materials which are also flammable"; the phrase "flammable liquid" would be removed and replaced with the phase "Class 3 (flammable liquid) material"; the phrase "any poison" would be removed and replaced with the phrase "any Division 6.1 (poisonous) or Division 2.3 (poisonous gas) materials"; the phrase "compressed gas" would be removed and replaced with the phrase "Class 2 (gases) material"; the phrase "flammable liquids and compressed gases" would be removed and replaced with the phrase "Class 3 (flammable liquid) and Class 2 (gases) materials"; and the phrase "the poison" would be removed and replaced with the phrase "the Division 6.1 (poisonous) or Division 2.3 (poisonous gas) material".

§ 177.861 [Amended]

134. In § 177.861, the following changes would be made:

a. In the section heading, paragraph (a), and Note 2 of paragraph (a), the phrase "radioactive materials" would be removed and replaced with the phrase "Class 7 (radioactive) materials".

b. In Note 1 of paragraph (a), the phrase "radioactive material" would be removed and replaced with the phrase "Class 7 (radioactive) material".

§ 177.870 [Amended]

135. In § 177.870, the following changes would be made:

a. In paragraph (d), the phrase "100 pounds gross weight" would be removed and replaced with the phrase "45 kg (99.2 pounds) gross weight", and the phrase "Class C explosives" would be removed and replaced with the phrase "Division 1.4 (Class C explosive) materials".

b. In paragraph (e), the phrase "100 pounds" would be removed and replaced with the phrase "45 kg (99.2 pounds)"; the phrase "500 pounds" would be removed and replaced with the phrase "225 kg (496 pounds)"; and the phrase "250 pounds" would be removed and replaced with the phrase "133.4 kg (250 pounds)".

c. In paragraph (c), the word "Explosives" would be removed and replaced with the phrase "Class 1 (explosive) materials".

d. In paragraphs (b), (d), and (e), the word "explosives" would be removed and replaced with the phrase "Class 1 (explosive) materials".

e. In paragraph (c), the word "explosive" would be removed and replaced with the phrase "Class 1 (explosive) material".

f. In paragraph (f), the word "Poisons" would be removed and replaced with the phrase "Division 6.1 (poisonous or irritating) or Division 2.3 (poisonous gas) materials"; the phrase "poison, class A, any tear gas or irritating substance, class C, any less dangerous poison, class B, which is a liquid" would be removed and replaced with the phrase

"Division 6.1 (poisonous or irritating) or Division 2.3 (poisonous gas) materials"; the phrase "poison, class B" would be removed and replaced with the phrase "Division 6.1 (poisonous) material"; and the phrase "100 pounds" would be removed and replaced with the phrase "45 kg (99.2 pounds)".

f. In paragraph (g), the phrases "Radioactive materials" and "radioactive materials" would be removed and replaced with the phrase "Class 7 (radioactive) materials", and the phrase "radioactive material" would be removed and replaced with the phrase "Class 7 (radioactive) materials".

Issued in Washington, DC, on April 19, 1990, under authority delegated in 49 CFR part 106, appendix A.

Alan I. Roberts,

Director, Office of Hazardous Materials Transportation.

[FR Doc. 90–10180 Filed 5–1–90; 8:45 am]

BILLING CODE 4910–60–M

federal register

Wednesday
May 2, 1990

Part VIII

Environmental Protection Agency

40 CFR Part 280

Underground Storage Tanks Containing Petroleum; Financial Responsibility Requirements; Interim Final Rule

ENVIRONMENTAL PROTECTION AGENCY

40 CFR Part 280

[FRL-3761-8]

Underground Storage Tanks Containing Petroleum; Financial Responsibility Requirements

AGENCY: Environmental Protection Agency (EPA).

ACTION: Interim final rule with request for comments.

SUMMARY: The Environmental Protection Agency (EPA) is today publishing an interim final rule amending the financial responsibility requirements for underground storage tanks (USTs) containing petroleum that appeared in the **Federal Register** on October 26, 1988 (53 FR 43322). Specifically, EPA is modifying the compliance dates under 40 CFR 280.91(c). Under the modification, all petroleum marketing firms owning 13–99 USTs at more than one facility will be required to comply with the requirements of 40 CFR part 280, subpart H—Financial Responsibility—as of April 26, 1991. This modification extends the deadline from the previous date of April 26, 1990. The amendments published today will provide additional time for the development of financial assurance mechanisms (especially, state assurance funds) to enable this group to comply.

DATES: The amendments to 40 CFR part 280 contained in this rulemaking are effective May 2, 1990. EPA will accept comments on today's rulemaking on or before June 1, 1990.

ADDRESSES: Comments may be mailed to the Docket Clerk (Docket No. UST–3), Office of Underground Storage Tanks (OS–400), U.S. Environmental Protection Agency, 401 M Street SW., Washington, DC 20460. Comments received by EPA may be inspected in the public docket, located in room 2427 (Mall), U.S. Environmental Protection Agency, 401 M Street SW., Washington, DC 20460, from 9 a.m. to 4 p.m., Monday through Friday, excluding Federal holidays.

FOR FURTHER INFORMATION CONTACT: The RCRA/Superfund Hotline at (800) 424–9346 (toll free) or (202) 382–3000 in Washington, DC.

SUPPLEMENTARY INFORMATION: On October 26, 1988, EPA promulgated financial responsibility requirements applicable to owners and operators of underground storage tanks (USTs) containing petroleum (53 FR 43322). In the final rule, EPA established a phased schedule of compliance for owners and operators of petroleum USTs. Petroleum marketing firms with 13–99 USTs at more than one facility were required to comply with the financial responsibility requirements by April 26, 1990. The principal reason for adopting the phased compliance approach was to allow providers (including private insurance companies and states intending to establish state assurance funds) of financial assurance mechanisms the time necessary to develop new policies and programs or to conform their policies and programs with EPA requirements. (See 53 FR 43324.)

Since October 1988, EPA has monitored the development of financial assurance markets, especially (1) insurance for corrective action and third party liability and (2) state assurance funds, to determine whether financial assurance mechanisms were becoming available to satisfy the needs of the regulated community. Based on this ongoing review, EPA believes that tank owners required to comply by April 26, 1990, need additional time to meet insurers' standards for coverage. Also, states need additional time to develop state assurance funds, to submit them to EPA for review and approval as financial assurance mechanisms, and to make any modifications necessary for approval. Therefore, EPA is now extending the compliance date for owners and operators of 13–99 USTs at more than one facility from April 26, 1990 to April 26, 1991. The Agency is hopeful that this one year extension will provide adequate time for tank owners and operators to obtain assurance.

I. Authority

These regulations are issued under the authority of sections 2002, 9001, 9002, 9003, 9004, 9005, 9006, 9007, 9009 of the Solid Waste Disposal Act, as amended. The principal amendments of this Act have been under the Resource Conservation and Recovery Act of 1976, the Hazardous and Solid Waste Amendments of 1984 (Pub. L. 98–616) and the Superfund Amendments and Reauthorization Act of 1986 (Pub. L. 99–499) (42 U.S.C. 6921, 6991, 6991(a), 6991(b), 6991(c), 6991(d), 6991(e), 6991(f), and 6991(h)).

II. Background

When devising the phased compliance approach, the Agency wanted to achieve the best balance between the need to ensure financial capability for addressing UST releases and the necessary time for owners and operators to obtain assurance mechanisms. The Agency attempted to establish compliance dates which were as early as possible, considering the type of assurance different types of facilities were likely to obtain. Petroleum marketers owning or operating 1,000 or more USTs and non-marketers with more than $20 million in tangible net worth were required to comply by January 24, 1989, based primarily on their ability to qualify for self-insurance. Petroleum marketers with 100–999 USTs were required to comply by October 26, 1989.

These marketers were estimated to be relatively more likely to be able to obtain insurance; some of them were also expected to qualify as self-insurers. Petroleum marketers owning 13–99 USTs at more than one facility were required to comply by April 26, 1990. These marketers were estimated to be less likely to be able to obtain insurance than members of the October 26, 1989 compliance group. Petroleum marketers owning or operating fewer than 13 USTs (or owning or operating a single facility with fewer than 100 USTs), and UST owners and operators that were not petroleum marketers (including local government entities) were required to comply by October 26, 1990. This group was expected to rely primarily on state assurance funds for compliance.

As EPA has been monitoring the development of financial assurance mechanisms, and as the Agency has learned more about the way insurers' operate in the UST insurance market, EPA believes that our original compliance date for this group (marketers owning 13–99 USTs at more than one facility) has to be extended based on new information. When devising the original phased compliance schedule, the Agency expected that members of this compliance group would rely primarily on insurance and that 18 months from promulgation of the final financial responsibility rule would provide adequate time for insurers to process applications and for owners and operators to upgrade their USTs to meet insurers' requirements. Since promulgation of the final rule, however, we have learned that tank owners and operators require additional time to comply with conditions imposed by the insurance industry. Some of these conditions include having tanks newer than 15 years of age, a clean site, a reliable method of leak detection, etc. For example, some insurers have informed EPA that they have rejected UST coverage applications because of existing contamination, poor tank management, and inadequate leak detection monitoring. Many members of this compliance group may not be able to meet these standards by April 26, 1990. The Agency has collected information from the major providers of

UST insurance which indicated that less than 2% of the USTs in the April 26, 1990 compliance group were covered by UST insurance as of March 1, 1990. Because of the still limited availability of insurance, EPA does not believe this low compliance record is due to an unwillingness to comply with EPA's requirements. Rather, the Agency believes that this low compliance rate is a symptom of the problems of UST owners and operators in obtaining the requisite insurance.

In addition, the Agency believes that many more members of this compliance group must rely on state assurance funds to demonstrate compliance with the financial responsibility requirements, and not on insurance, than the Agency had originally projected. In order for owners and operators to rely on state assurance funds as compliance mechanisms, states must submit their funds to EPA. Although owners and operators are deemed to be in compliance when the state funds are submitted, the Agency has not considered submitted funds when determining availability, since the funds ultimately could be disapproved. To date, nine state assurance funds have been approved by EPA to serve as compliance mechanisms. Many more states have submitted funds and are in the process of making any modifications necessary for approval. The remaining states either have not submitted their funds to EPA or are in the process of developing assurance funds. Since many of the members of this compliance group must rely on state assurance funds to comply with the requirements, additional time is needed to allow states to develop, submit, and receive approval for the funds.

By extending the compliance date for this group to April 26, 1991, owners and operators will have additional time to meet insurers' standards and states will have additional time to submit their state assurance funds to EPA for approval so that owners and operators can use them to comply with the financial responsibility requirements.

EPA is not soliciting comments prior to the effective date of today's rulemaking. Under section 3(b) of the Administrative Procedures Act, 5 U.S.C. 553(b), the Agency may for good cause omit notice and comment procedures. The Agency believes it has good cause to omit notice and comment procedures. When the Agency developed the phased schedule of compliance, it predicted that 18 months from promulgation of the final financial responsibility rule would provide adequate time for petroleum marketers owning 13–99 tanks to comply with the financial responsibility requirements. Since that time, the Agency has been monitoring the development of financial assurance mechanisms, particularly insurance and state assurance funds.

Through monitoring the insurance market, the Agency has learned that the UST insurance market is a volatile one. Because of this volatility, the Agency remained hopeful that it would not be necessary to revise the phased compliance schedule.

Recent developments in the UST insurance market demonstrate the volatility of this sector of the insurance industry. When the final financial responsibility regulation was promulgated in 1988, there were approximately three providers of UST insurance. Since that time additional insurers have entered the market while some insurers have left the market. For example, the Pollution Liability Insurance Association was a major provider of UST coverage, but withdrew from the market in 1989. The Environmental Protection Insurance Company, a new entrant into the UST insurance market, also withdrew in 1989. In February 1990, Petromark, a major provider of UST insurance, experienced serious financial difficulties and announced that it may not be able to continue providing UST insurance.

In addition to monitoring the development of the UST insurance market, the Agency is also monitoring the development of state assurance funds. EPA is currently reviewing numerous state assurance funds to determine whether they are acceptable compliance mechanisms for owners and operators.

Because delays involved in proposing the amendments for public comment would prevent the promulgation prior to the originally scheduled compliance date, allowing the opportunity for public comment would result in unnecessary closure of tanks and economic distress to the regulated community with no additional benefits to the environment and public health. EPA believes, therefore, that providing notice and comment on these amendments is impracticable and contrary to the public interest.

The Agency is, however, soliciting comments on today's regulatory amendments. Comments may be submitted on or before June 1, 1990.

Comments will be considered by the Agency and, if necessary, the Agency will issue a revised final rule changing today's amendments to respond to these comments.

List of Subjects in 40 CFR Part 280

Administrative practice and procedure, Environmental protection, Hazardous materials insurance, Oil pollution, Penalties, Petroleum, Reporting and recordkeeping requirements, State program approval, Surety bonds, Underground storage tanks, Water pollution control.

Dated: April 25, 1990.

William Reilly,

Administrator.

For the reasons set out in our preamble, part 280 of title 40 of the Code of Federal Regulations is amended as set forth below.

PART 280—TECHNICAL STANDARDS AND CORRECTIVE ACTION REQUIREMENTS FOR OWNERS AND OPERATORS OF UNDERGROUND STORAGE TANKS (UST)

1. The authority citation for part 280 continues to read as follows:

Authority: 42 U.S.C. 6912, 6991, 6991(a), 6991(b), 6991(c), 6991(e), 6991(f), and 6991(h).

2. Section 280.91(c) is revised to read as follows:

§ 280.91 Compliance dates.

* * * * *

(c) All petroleum marketing firms owning 13–99 USTs at more than one facility; April 26, 1991.

* * * * *

[FR Doc. 90–10198 Filed 5–1–90; 8:45 am]

BILLING CODE 6560–50–M

federal register

Wednesday
May 2, 1990

Part IX

Department of Transportation

Federal Aviation Administration

14 CFR Part 23

Airworthiness Standards; Commuter Category Airplanes; Final Rule

DEPARTMENT OF TRANSPORTATION

Federal Aviation Administration

14 CFR Part 23

[Docket No. 23516; Amdt. No. 23-39]

RIN 2120-AC77

Airworthiness Standards; Commuter Category Airplanes

AGENCY: Federal Aviation Administration (FAA), DOT.

ACTION: Final rule.

SUMMARY: This action responds to comments received on the small airplane commuter category airworthiness requirements that were recently adopted by FAA. The final rule action, which adopted the airworthiness requirements, invited public comments. This amendment informs the public of FAA's response to all comments received and amends certain commuter airplane requirements.

EFFECTIVE DATE: May 2, 1990.

FOR FURTHER INFORMATION CONTACT: Joseph H. Snitkoff, Manager, Regulations Section, ACE-112, Small Airplane Directorate, Aircraft Certification Service, Federal Aviation Administration, 601 East 12th Street, Kansas City, Missouri 64106; telephone (816) 426-5688.

SUPPLEMENTARY INFORMATION:

Regulatory History

This amendment is based on the requirements adopted by amendment 23-34 and the comments received in response to the request for comments to that final rule action. Amendment 23-34 was published in the **Federal Register** (52 FR 1806; January 15, 1987) and included a request for comments. Amendment 23-34 resulted from the Notice of Proposed Rulemaking (NPRM), Notice 83-17, published in the **Federal Register** (48 FR 52010; November 15, 1983).

All comments received in response to Notice 83-17 were considered in adopting amendment 23-34 and amendments 21-59, 36-13, 91-197, and 135-21 of the Federal Aviation Regulations (FAR), published concurrently with amendment 23-34.

All comments received in response to the request for comments published with the above-cited amendments were considered in adopting this amendment.

Background

Since 1953, the airworthiness standards have distinguished small from large airplanes by a 12,500 pound maximum certificated takeoff weight limitation regardless of the type of operation. When this weight limitation was established, little concern was expressed that this demarcation would eventually become questionable with regard to airworthiness standards for an airplane of the commuter category. At that time, there were few airplane designs near this 12,500 pound limitation, i.e., they were either considerably above or below that weight.

In 1966, the FAA established an Air Taxi Airworthiness Program with the objective to provide a transition for air taxi airplanes from the small airplane requirements of part 23 to the transport category airplane requirements of part 25. That program resulted in the issuance of Special Federal Aviation Regulation (SFAR) 23 (34 FR 189; January 7, 1969). An additional step in the upgrading of airworthiness standards for reciprocating-engine and turbopropeller-powered small airplanes used in part 135 operations was the adoption of an appendix A to part 135 (35 FR 10098; June 19, 1970), which set forth additional airworthiness standards for airplanes with ten or more passenger seats.

On July 7, 1970, the FAA issued Notice 70-25 (35 FR 10911) proposing to upgrade the level of airworthiness of small airplanes intended for operations under part 135. In response to the comments received to Notice 70-25, and after further consideration, the FAA determined to limit the future applicability of part 23 to small normal, utility, and acrobatic category airplanes with a seating configuration, excluding pilot seats, of nine or fewer. At that time, this action was considered more appropriate than adding additional airworthiness requirements to part 23. This action was based upon a trend toward an increase in the number and types of airplanes designed to carry relatively larger numbers of passengers. At that time, the FAA considered that continued applicability of part 23 to small airplanes designed to carry ten or more passengers was no longer in the interest of safety and future generations of these small airplanes should adhere to the level of safety afforded by the requirements of part 25, irrespective of whether operations were conducted under part 135 or part 91. Thus, amendment 23-10 (36 FR 2864; February 11, 1974), which limited the number of seats, excluding pilot seats, to nine or fewer became effective March 13, 1971, and is applicable to normal, utility, and acrobatic category airplanes for which an application for a type certificate is received by the FAA after the March 13, 1971, date.

On August 29, 1977, the FAA issued Notice 77-17 (42 FR 43490), part 135 Regulatory Review Program, which proposed, in part, to prohibit the operation, after certain dates, of reciprocating engine or turbopropeller-powered small airplanes not certificated in the transport category and having a passenger seating configuration of ten or more seats. Before the closing date for comments on November 28, 1977, the FAA withdrew this part of the proposal in Notice 77-17. The more significant reasons given for the withdrawal were: (1) Comments on this proposal showed its effect would virtually destroy the commuter airline industry and deprive the general public of needed transportation; (2) the proposal had already disastrously affected the industry; (3) airplane sales had been cancelled and operators had serious difficulty with financing; and (4) the cost of complying with the proposal would exceed $300 million for an industry whose total profits did not exeed $50 million a year.

Consequently, the FAA determined that the proposal should not be retained as part of the proposed new part 135. The FAA did note that the withdrawal of the proposal did not preclude the FAA from issuing similar proposals in the future due to a change in circumstances or commit the FAA to any course of action. The FAA encouraged further comments on this issue.

The FAA/Industry Commuter Aircraft Weight Committee submitted a petition to amend the regulations to allow certain small airplanes to be type-certificated at maximum certificated weights greater than the 12,500 pound limitation without complying with the transport category airworthiness requirements of part 25. Responding to this petition and other needs for improved standards resulting from the Airline Deregulation Act, the FAA initiated a three-phase program for certification and operation of commuter airplanes. The first phase was the issuance of a revised part 135—Air Taxi Operators and Commercial Operators (43 FR 46742; October 10, 1978), which aligned the rules for those operations more closely with those of part 121—Certification, and Operations: Domestic, Flag, and Supplemental Air Carriers and Commercial Operators of Large Aircraft. The second phase, initiated by Notice 78-14 (43 FR 46734; October 10, 1978), proposed temporary rules stating the additional airworthiness requirements necessary to provide for increased takeoff gross weight and passenger seating capacity of certain existing

small, propeller-driven, multiengine airplanes. The outcome of this notice was the adoption of SFAR 41 (44 FR 53723; September 17, 1979), which became effective October 17, 1979. The third phase established the Light Transport Airworthiness Review, Notice 78–17 (43 FR 60846; December 28, 1978) to develop a separate set of airworthiness standards for multiengine airplanes with a maximum gross weight up to 35,000 pounds and a seating capacity up to 30 passengers. Subsequent considerations and recommendations from industry during the review escalated the maximum weight and passenger capacity limits to 50,000 pounds and 60 passengers for the light transport category airplane. Nevertheless, the FAA terminated the Light Transport Airworthiness Review Program because, based on available information, the expected economic benefits resulting from a new light transport airplane airworthiness regulation would not be realized.

After the expiration of SFAR 41, as amended on October 17, 1981, and termination of the Light Transport Airplane Airworthiness Review, the FAA reinstated SFAR 41, with amendments, as SFAR 41C, effective September 13, 1982 (47 FR 35150; August 12, 1982), for 1 year and subsequently started development of the commuter category requirements. Accordingly, Notice 83–17 (48 FR 52010; November 15, 1983) contained the proposed commuter category requirements.

The final commuter rule amended § 91.213, by adding a new paragraph to require two pilots for airplanes with ten or more passengers. Because this change was not in the original notice, FAA requested comments and stated in the final action that if comments and further study by the FAA indicated a need to make further regulatory changes, the FAA would initiate appropriate action. Further, the FAA requested comments on possible new seat and weight demarcations between the small and large airplanes. Six commenters responded to the final rule.

Discussion of Comments

One commenter cites the preamble of Notice 83–17 and its economic impact statement relative to this commenter's expectations that an airplane that complies with the requirements of pre-commuter rule part 23; part 135, appendix A; SFAR 41; and ICAO Annex 8 would also meet those sections of part 23 that incorporate the commuter category rules. Based on these expectations, the commenter believes that an airplane certificated to SFAR 41 for ICAO Annex 8 operation should be certifiable in the new commuter category without further showing of compliance.

This commenter cites new § 23.53(c)(6) and (c)(7) relative to takeoff speeds, § 23.67 relative to one-engine-inoperative climb, and § 23.807 relative to emergency exists.

This commenter contends that new § 23.53(c)(6) and (c)(7) incorporate portions of part 25 that were not previously applied to SFAR 41 airplane compliance with ICAO Annex 8, and further contends that, based on the commenter's experience with SFAR 23 airplanes, the agency had previously determined that takeoff-speed abuse testing was not necessary. A search of FAA records did not reveal any previous determination on this point. The commuter category was specifically intended for commuter air carrier operations. Public Law 95–504, the Airline Deregulation Act of 1978, charged the FAA with establishing requirements to assure that the level of safety provided to persons traveling on such commuter air carriers be, to the maximum feasible extent, equivalent to the level of safety provided to persons traveling on air carriers. The FAA considers compliance with the cited requirements feasible for certification in the commuter category. Therefore, § 23.53 (c)(6) and (c)(7) are not being revised and remain applicable for certification in the commuter category.

This commenter also contends that the FAA, in responding to comments received to proposal 13 of Notice 83–17, included a climb requirement for the takeoff, landing gear extended configuration in § 23.67. The commenter considers it unfortunate that the FAA adopted a portion of § 25.121(a) instead of § 6(b)(1) of part 135, appendix A for the commuter category, and further notes that SFAR 41 did not require compliance with § 25.121(a); the commenter claims that this seemingly unimportant difference will require reevaluation of SFAR 41 airplanes certificated to ICAO Annex 8. The commenter further contends that, as adopted, § 23.67 requires that landing gear doors, which are opened only while the landing gear is in motion, must be blocked open for the whole period of the test.

Proposal 13 of the notice to amend § 23.67 proposed that takeoff climb must be determined in accordance with § 23.57 for takeoff path, and would require that the slope of the airborne part of the takeoff path must be positive at each point. No comments on the notice were received relative to this proposed requirement, and the substance of § 23.57 was adopted. However, a comment was received to the effect that the proposed requirement in § 23.67 was not complete and referenced the more complete statement in § 6 of part 135, appendix A, which was cited as a reference source for proposal 13 of the notice.

The FAA reviewed all of the relevant data and concluded that incorporating takeoff path requirements of § 23.57 into § 23.67 as takeoff climb requirements achieved the consistency desired, but was unclear. The agency considered adopting the same language in § 23.67 as that used in part 135, appendix A. The FAA determined that the use of the language of part 135, appendix A would clarify the requirement providing the intent of the proposed requirement in Notice 83–17 is retained; that is, the slope of the airborne part of the takeoff path must be positive at each point. Therefore, § 23.67(e), climb with one engine inoperative for commuter category airplanes, was adopted without incorporating § 23.57 by reference and was worded similarly to part 135, appendix A, section 6(b).

The issue raised by this commenter is whether the FAA should require testing at only one specific airspeed (V_1) with the landing gear down and the gear doors closed to assure that the airplane is capable of safely continuing a takeoff after an engine failure at V_{EF}. The alternative is that the FAA require testing to assure that the airplane is capable of safely continuing a takeoff after an engine failure at V_{EF} with a measurably positive climb gradient at all points. This includes the climb phase during which the gear is being retracted with the gear doors opened to allow storage of the gear. The FAA considered this issue in developing the notice of proposed rulemaking for the commuter category and concluded that, for the level of safety intended in the commuter category, a positive gradient of climb at all points of the takeoff climb is necessary.

In regard to this commenter's expectations that an airplane certificated to SFAR 41 for ICAO operation and should be certificated in the new commuter category without further showing of compliance, Notice 83–17 was designed to make it clear that it was FAA's intent to establish a new airplane category, within part 23, in response to the Airline Deregulation Act. Although the FAA cited SFAR 41 as a reference source for the majority of the new commuter category requirements, the FAA clearly stated that the proposals in the notice would be proposed new rules that would be

applicable to newly-certificated airplanes. Because newly-certificated airplanes would not have any significant service history or safety record comparable to "derivative" SFAR 41 airplanes, the FAA determined that they should be required to meet ICAO performance requirements, which were optional for SFAR 41 approval. Comments to the proposed ICAO performance requirement in the notice were addressed in the preamble to the final rule. The FAA believes that the commuter category requirements were clearly explained in previous documents and, therefore, has not made changes to those requirements, as suggested by this commenter.

This commenter further contends that the adopted rule now requires that landing gear doors, which are opened only while the landing gear is in motion, must be blocked open for the whole period of the takeoff test. The FAA disagrees. The applicant has several testing options, including:

(1) With instrumentation installed that will clearly indicate the presence or absence of a positive gradient of climb at each point, tests may be conducted where failure of the critical engine is simulated at V_{EF} and the one-engine-inoperative takeoff and climb is continued to 400 feet altitude above the surface, with landing gear retraction initiated after the airplane has reached an altitude of at least the airplane's wingspan (out of ground effect).

(2) Without special instrumentation installed, tests may be conducted with the landing gear locked down and the gear doors blocked open where failure of the critical engine is simulated at V_{EF}, and the one-engine-inoperative takeoff and climb to 400 feet altitude above the surface is accomplished; and

(3) For airplanes whose minimum life condition occurs with the landing gear down and locked, tests may be conducted out-of-ground effect at V_{EF} to show that, in this condition, the minimum steady gradient of climb is measurably positive.

Based on the above-discussed considerations, the FAA has determined that § 23.67(e) as adopted in amendment 23–34 is appropriate for the commuter category and remains unchanged.

This same commenter also referred to its previous comment to Notice 83–17, Proposal 29 on § 23.807, Emergency exits, and stated that it was the commenter's impression § 23.807(d) was amended to bring it into agreement with prior interpretations of SFAR 41. The commenter contends that SFAR 41 airplanes with eleven or fewer occupants are required to have the same number of exits as normal category airplanes. Normal category airplanes, other than SFAR 41 airplanes, are limited to a passenger seating configuration, excluding pilot seats, of nine or fewer passenger seats. This commenter contends that the FAA summarily rejected the comment to Notice 83–17 and ignored a previous FAA policy letter relative to SFAR 41 emergency exits.

The commenter further contends that the FAA has established two different standards for seating requirements for airplanes with eleven or fewer occupant seats and nine or fewer passenger seats within part 23, and that both normal category and commuter category airplanes may be used in scheduled passenger operations for compensation under part 135 or for operations under Part 91.

In regard to the comment on Notice 83–17, the FAA rejected this comment because, for the level of safety intended for the commuter category, it considered the minimum acceptable number of exits for a total passenger seating configuration of fifteen or fewer to be three. To meet this requirement, the main entry door must qualify as an emergency exit. There must also be one exit on the side of the airplane opposite the door, and one additional exit on the same side as the door. Typically, the main door, which qualifies as an emergency exit, incorporates features such as airstairs and is hinged at the bottom. Such features tend to inhibit the door's function as an emergency exit in emergency situations involving collapsed landing gear.

Review of all rulemaking documents and other available documents concerning establishment of SFAR 41 shows that the intent of SFAR 41 remains as stated in the **Federal Register** (44 FR 53723; September 17, 1979):

> The essential provisions that were proposed in Notice 78–14 are being adopted by this amendment. The new rules will allow the certification of propeller-driven multiengine small airplanes with a passenger seating configuration of between 10 and 19 seats that were originally type certificated in accordance with Part 23 of the FAR in effect on March 13, 1971, or later. The new rules will also allow the certification and operation, with appropriate restrictions and limitations, of small propeller-driven multiengine airplanes at maximum takeoff weights in excess of 12,500 pounds.
>
> The interim nature of the SFAR is reflected in the same limits proposed * * *.

When SFAR 41 was adopted, the FAA clearly stated that this temporary rule was intended for airplanes with a passenger seating configuration between 10 and 19 seats.

In the same rulemaking action, the FAA stated "* * * this rulemaking action (SFAR 41) is not intended to impose retroactive requirements on airplanes of older type design * * *." At that time, the FAA did not anticipate certification of airplanes to SFAR 41 with fewer than ten passenger seats and, therefore, section 5(b) of SFAR 41 did not consider airplanes with this seating capacity. Subsequently, applications were received for certification to SFAR 41 with fewer than ten passenger seats. For these airplanes, the only relief needed was from the 12,500 pound maximum gross weight, so the FAA only imposed those additional requirements in SFAR 41 related to the increased gross weight, and issued a policy letter, cited by the commenter, relative to airplanes with fewer than ten passengers and the emergency exit requirements.

In contrast to SFAR 41, the commuter category rule was intended to provide requirements that would allow the type certification of newly-designed airplanes that have no operating history. This rulemaking action was intended to increase the level of safety above that established in SFAR 41. Accordingly, the prior decision relative to SFAR 41 exits did not effect the rulemaking action to establish the new commuter category. Therefore, § 23.807 will retain the commuter emergency exit requirements as adopted in amendment 23–34.

One commenter recommended that the word "automatic" be deleted from § 23.57(c)(4). This requirement concerns feathering of the propeller on an inoperative engine during takeoff and climb to 400 feet. Simulation studies and accident investigations have shown that during heavy workload in the cockpit, as with an engine loss during takeoff, the pilot might feather the wrong propeller. As explained in the response to comments to Notice 83–17, the propeller feathering allowed in showing compliance with § 23.57(c)(4) is limited to "automatic" feathering, not manual feathering, and "automatic" was added to the rule to clarify the intent. Section 23.57(c)(4) remains as adopted in amendment 23–34.

One commenter identified § 23.65, but the comment was applicable to § 23.67(e)(2). The commenter agreed that § 23.67(e)(2) relative to en route climb, as adopted, is consistent with other airworthiness requirements but recommended that the rate-of-climb requirement be changed from "at an altitude of 1,500 feet above the takeoff surface" to "* * * at a height of 1,500 feet above the takeoff surface." The FAA has reviewed this comment and

agrees that the intent of § 23.67(e)(2) was for the enroute climb determination to be made on the basis of a specified climb gradient, depending on the number of engines, at a tape line height of 1,500 feet above the takeoff surface. The use of the word "height" in this requirement will more accurately reflect that intent and § 23.67(e)(2) is being amended to reflect this clarification.

One commenter requested that the FAA establish rules and procedures which would allow a single pilot for non-passenger carrying operations. This request is beyond the scope of the commuter category rulemaking.

One commenter proposed that the 19,000-pound maximum gross weight be changed to 19,000-pound maximum zero fuel weight. The commenter anticipated that a 3-abreast, 19-passenger airplane with transport category aisle width and a full complement of avionics and safety equipment could well have an operating empty weight in the range of 14,000 pounds. Under the adopted rule, this would leave 5,000 pounds for payload and fuel that the commenter contends is barely enough for a short communter flight. There would be no allowance for additional opitonal equipment and the airplane would be severely limited on any long routes.

The FAA does not intend the commuter category requirements to provide the certification basis for all airplanes of 19 or fewer passengers. The airplane described by this commenter would clearly be a higher gross weight airplane designed for operation over longer routes than those considered for the commuter category. The FAA adopted the 19,000-pound maximum gross weight limit for the commuter category to provide a practical weight limit for certification in this category. Contrary to this commenter's contention that this weight limit will unduly restrict range and payload of commuter category airplanes, applicants who have applied for type certification of commuter category airplanes have not identified any problem with the airplane range that would be provided by the fuel permitted under the 19,000-pound maximum gross weight. At this time, heavier airplanes will continue to be certificated under the transport category requirements. Therefore, the recommended zero fuel weight change has not been adopted.

One commenter recommends the tightening of noise standards for commuter category airplanes. This commenter is concerned about recurring noise from maintenance "run-ups" of turboprop commuter airplanes between the hours of 4:00 and 7:00 a.m., seven days a week, in smaller communities where residential areas are in close proximity to airport property. Since this commenter's concerns are outside the scope of this rulemaking, no action is being taken to revise that noise standard.

One commenter considered the seat demarcation to be well placed at 19 passengers since this configuration avoids the burden that would be imposed by the requirement for a flight attendant. Another commenter recommends that § 23.3(d) be changed to read, "The commuter category is limited to * * * airplanes that have a seating configuration, excluding crew seats, of 19 or less * * * ." This substitution of "crew seats" for "pilot seats" would permit certification of commuter category airplanes with 19 passenger seats plus a cabin attendant's seat. The commenter contends that this would enhance safety and that, should an operator seek to include an additional crew seat in the cabin for a cabin attendant, the FAA would probably grant such an exemption to the current rule.

The FAA did not propose airworthiness criteria appropriate to a flight attendant's seat in Notice 83–17 and the criteria applicable to a passenger seat is not appropriate for a flight attendant's seat. There are other airworthiness and operational requirements that are related to the installation of a flight attendant seat. Issues related to those requirements need to be considered in a separate rulemaking action and, therefore, are beyond the scope of this rulemaking.

One commenter recommended shoulder harnesses for all seats in commuter category airplanes. At the time Notice 83–17 was issued, part 23 required shoulder harnesses for the front seats. Subsequently, amendment 23–32 required shoulder harnesses at all seats in normal, utility, and acrobatic category airplanes with nine or fewer passenger seats and manufactured after December 12, 1986. Airplanes in these categories having ten or more passenger seats may continue to be produced in accordance with their previously approved design without shoulder harnesses for passenger seats.

Shoulder harnesses remain a significant agency concern relative to commuter category occupant protection. The FAA plans to address commuter category occupant protection in a separate rulemaking action.

One commenter recommended requirements that fire blocking seat cushions be required for commuter category airplanes, as they are for part 25 (§ 25.853(c)), because such provisions would increase the available evacuation time in case of fire. As stated in Notice 83–17, the FAA is considering the need for similar requirements for all aircraft used in part 135 operations. Until the FAA adopts such requirements for all aircraft used in part 135 operations, the compartment interior requirements will remain as adopted in amendment 23–34.

One commenter recommended that flight recorders and cockpit voice recorders be required for the commuter category airplanes. Amendment 23–35 (53 FR 26134; July 11, 1988) adopted airworthiness requirements for these recorders. Operating rules define the airplanes on which the recorders must be installed. Accordingly, action on this recommendation has been accomplished.

One commenter recommended incorporating the intent of National Transportation Safety Board (NTSB) Recommendations A–87–1 and A–87–2, relative to potential for injury of occupants seated in areas within the plane of rotation of engine propeller blades. After completing its review of these recommendations, the FAA informed the NTSB that shielding sufficient to protect the cabin from a propeller blade or blade fragment separation would impose prohibitive airplane weight penalties and that relocating passengers away from the propeller area in smaller transport or commuter category airplanes is not feasible because there is no place to relocate these seats. Removal of these seats and reducing the passenger capacity would be the only alternative. Because the additional prohibitive weight or removal of seats from the airplane would impose a large economic burden on the aircraft community, the FAA has advised NTSB that no such rulemaking action is being proposed. Accordingly, no such action is being taken as recommended by this comment.

One commenter agreed with the airworthiness standards as adopted for the commuter category.

One commenter considered it an error that § 23.933(d) incorporated by reference § 23.933(c) because part 135, appendix A, section 39 does not include a similar requirement. The FAA did use part 135, appendix A, section 39 as a reference source in developing the NPRM. However, the reference material cited did not specifically address the failures where an airplane is designed for use of inflight reverse thrust and where a failure allows one engine to remain in the forward thrust mode while the other engine(s) go to the reverse thrust mode. Until power is applied for reverse thrust, this failure might not be detected and loss of control could occur

before failure recognition (from resulting yaw conditions) and corrective action. Incorporating § 23.933(c) by reference, for the commuter category, appeared to be an expeditious means of establishing the level of safety intended for the commuter category in this regard.

The FAA does not consider a malfunction of thrust reversing systems on commuter category airplanes, intended for ground operation only, to result in hazardous conditions, and did not intend § 23.933(c) to be applicable to such systems. However, the requirement, as adopted, applies to all commuter category thrust reversing systems. After further review of § 23.933(d), as adopted, which incorporates both § 23.933(b) and § 23.933(c) by reference, the FAA has concluded that the requirements in § 23.933(b) are adequate to ensure the level of safety intended because that paragraph specifically addresses failures of reversing systems intended for inflight use. Accordingly, § 23.933(d) is amended to remove the incorporation by reference of § 23.933(c).

One commenter considered it an error that § 23.1587(d)(6) required "calibrated airspeeds" rather than "indicated airspeeds" for presentation of performance information in the flight manual, citing part 135, appendix A, section 20(f), which uses "indicated airspeeds", and further contends that indicated airspeeds are preferred for flight manual presentations. The FAA did use part 135, appendix A, section 20(f) as a reference source in developing the NPRM. However, use of "indicated airspeeds" in the commuter category would not provide the intended accuracy of the information required to be presented. Indicated airspeeds include errors which are typically attributable to pitot and static pressure sensing errors and indicating system errors. The indicating system errors vary with each airplane, with the quality of the indicating system and accuracy of its calibration, which determine whether these errors are held to a low enough value at the critical airspeeds to ensure that they are nonsignificant.

The pitot and static pressure sensing errors are usually attributable to the location of the pitot tube and the static ports on the airplane. Due to the wide range of speeds at which airplanes of the commuter category will typically operate, it is expected that manufacturers of these airplanes will encounter significant difficulty in locating positions for these sensors that result in consistently insignificant errors. These errors are referred to as position errors. If the errors are consistently repeatable, air data computers can provide automatic correction. Both the airplane design and quality control during production determine whether the position error is consistently repeatable.

Added to these concerns was that § 23.1587(d)(6) required the information be presented as determined in accordance with § 23.53, Takeoff speeds. These takeoff speeds are required by § 23.53 to be determined in calibrated airspeed.

The FAA agrees that flight manual information presented in terms of indicated airspeed requires less effort for the flight crew to use. The FAA also agrees that the calibrated airspeed data determined in accordance with § 23.53 can be converted to indicated airspeed accurately. However, the FAA has reviewed flight manuals in which the data (in indicated airspeed) was corrected for position error and all other errors were assumed to be zero.

Part 1 defines "calibrated airspeed" as the indicated airspeed of an aircraft, corrected for position and instrument errors. Calibrated airspeed is equal to true airspeed in standard atmosphere at sea level. Part 1 defines "indicated airspeed" as the speed of an aircraft as shown on its pitot static airspeed indicator calibrated to reflect standard atmosphere compressible flow at sea level uncorrected for airspeed system errors.

In consideration of the concern for the pilot's airspeed accuracy, § 23.1587(d)(6) was adopted in amendment 23–34 requiring that data be presented in calibrated airspeed so that all errors are accounted for in the data presented for the flight crew's use. The FAA agrees that, if all errors are accounted for, the required data could be presented in indicated airspeed and result in an equivalent level of safety. Therefore, § 23.1587(d)(6) is amended to allow this alternative data presentation if it is clearly shown that all errors are accounted for and the presented data accurately represents the calibrated airspeed data determined in showing compliance with § 23.53.

Regulatory Evaluation Summary

These amendments involve substantial benefits without any associated incremental costs as they basically integrate into the FAR previous temporary airworthiness standards for type certification. If more detailed economic information is desired than is contained in this summary, the reader is referred to the full regulatory evaluation contained in the docket.

Regulatory Flexibility Determination

The FAA determined that the rule changes will not have a significant economic impact on a substantial number of small entities. The FAA's criteria for a small airplane manufacturer is one employing fewer than 75 employees, and a substantial number is a number which is not fewer than 11 and which is more than one-third of the small entities subject to the proposed rules, and a significant impact is one having an annual cost of more than $14,258 per manufacturer.

A review of domestic general aviation manufacturing companies indicates that only six companies meet the size threshold of 75 employees or fewer. The amendment will, therefore, not affect a substantial number of small entities.

Trade Impact

The amendments to the FAR will not affect trade opportunities for both U.S. firms doing business overseas and foreign firms doing business in the United States.

Federalism Implications

The regulations adopted herein will not have substantial direct effects on the states, on the relationship between the national government and the states, or on the distribution of power and responsibilities among the various levels of government. Therefore, in accordance with Executive Order 12612, it is determined that this final rule does not have sufficient federalism implications to warrant the preparation of a Federalism Assessment.

Conclusion

For the reasons discussed in the preamble, the FAA has determined that this document (1) involves regulations which are not considered to be major under the procedures and criteria prescribed by Executive Order 12291, and (2) is not significant under Department of Transportation Regulatory Policies and Procedures (44 FR 11034; February 26, 1979). I certify that under the criteria of the Regulatory Flexibility Act, these final rules will not have a significant economic impact on a substantial number of small entities. In addition, these final rules will have little or no impact on trade opportunities for U.S. firms doing business overseas or for foreign firms doing business in the United States.

List of Subjects in 14 CFR Part 23

Aircraft, Air transportation, Aviation safety, Safety.

Adoption of the Amendments

Accordingly, 14 CFR part 23 is amended as follows:

PART 23—AIRWORTHINESS STANDARDS: NORMAL, UTILITY, ACROBATIC, AND COMMUTER CATEGORY AIRPLANES

1. The authority citation for part 23 continues to read as follows:

Authority: 49 U.S.C. 1344, 1354(a), 1355, 1421, 1423, 1425, 1428, 1429, 1430, and 1502; and 49 U.S.C. 106(g) (Revised, Pub. L. 97–449; January 12, 1983).

§ 23.67 [Amended]

2. Section 23.67(e)(2) is amended by changing the phrase "at an altitude of 1,500 feet above the takeoff surface" to "at a height of 1,500 feet above the takeoff surface".

§ 23.933 [Amended]

3. Section 23.933(d) is amended by changing the words "paragraphs (b) and (c) of this section" to "paragraph (b) of this section."

4. Section 23.1587(d)(6) is amended by adding a sentence at the end to read as follows:

§ 23.1587 Performance information.

* * * * *

(d) * * *

(6) * * * The calibrated airspeed may be shown in units of indicated airspeed, and identified as indicated airspeed, provided that all pressure sensing and instrumentation errors, including the indicator, are accounted for in the flight manual data.

Issued in Washington, DC on April 26, 1990.

James B. Busey,

Administrator.

[FR Doc. 90–10182 Filed 5–1–90; 8:45 am]

BILLING CODE 4910–13–M

federal register

Wednesday
May 2, 1990

Part X

Department of Transportation

Coast Guard

33 CFR Part 151
46 CFR Part 25
Prevention of Pollution From Ships; Interim Final Rule

DEPARTMENT OF TRANSPORTATION

Coast Guard

33 CFR Part 151

46 CFR Part 25

[CGD 88-002A]

RIN 2115-AD40

Prevention of Pollution From Ships

AGENCY: Coast Guard, DOT.

ACTION: Interim final rule and request for comments.

SUMMARY: This action amends the Coast Guard's garbage pollution regulations by adding waste management plan and placard requirements for certain U.S. ships, including recreational vessels and fixed or floating platforms. These provisions are needed to ensure that persons on the ship are made aware of garbage pollution laws and penalties and that garbage is discharged in accordance with a waste management plan based on those laws. This action should help reduce the number of unlawful garbage discharges and the resulting pollution.

DATES: This rule is effective on July 31, 1990. Comments on § 151.59 (a)(2) and (b) must be received on or before June 18, 1990.

ADDRESSES: Comments on § 151.59 (a)(2) and (b) may be mailed to the Executive Secretary, Marine Safety Council (G-LRA-2/3314) (CGD 88-002A), U.S. Coast Guard, 2100 Second Street SW., Washington, DC 20593-0001. Comments received may be inspected or copied at the Office of Marine Safety Council, U.S. Coast Guard, Room 3314, 2100 Second Street SW., Washington, DC 20593-0001 between 8 a.m. and 3 p.m., Monday through Friday, except Federal holidays. The telephone number is (202) 267-1477.

FOR FURTHER INFORMATION CONTACT: LCDR Carl A. Crampton, Project Manager, Port Safety and Security Division (G-MPS), (202) 267-0491, between 7 a.m. and 3:30 p.m., Monday through Friday, except Federal holidays.

SUPPLEMENTARY INFORMATION: On September 6, 1989, a notice of proposed rulemaking (NPRM), entitled "Prevention of Pollution From Ships," was published in the **Federal Register** (54 FR 37084). The Coast Guard received 41 letters commenting on the proposed rulemaking. A public hearing was not requested and one was not held.

These regulations are being published as an interim final rule to allow the public to comment on paragraphs (a)(2) and (b) of § 151.59. New paragraph (a)(2) has been added to make it clear that the placarding requirements are to apply also to manned fixed or floating platforms. The cost figures used in both the draft and final Regulatory Evaluations included the cost of placarding on manned fixed or floating platforms. New paragraph (b) concerns the number and location of placards posted to inform crew and passengers of the garbage discharge laws. The NPRM wording would have required only one placard for each vessel. A single placard for larger vessels or for passenger vessels may not be adequately accessible to all persons on board. Therefore, this section has been changed to require more than one placard depending upon the needs of the particular vessel. The Coast Guard Captain of the Port also is authorized to require additional placards and to specify their location.

In order to provide full opportunity for public comment on the changes made to § 151.59 (a)(2) and (b) since the NPRN, the Coast Guard is soliciting comments on these changes. The deadline for comments on § 151.59 (a)(2) and (b) is June 18, 1990.

Persons submitting comments on § 151.59 (a)(2) or (b) should include their name and address, reference the docket number (CGD 88-002A), and give the reasons for each comment. If acknowledgement of receipt of comments is desired, a stamped, self-addressed postcard or evelope should be enclosed.

All comments received before the expiration of the comment period will be considered before final action is taken on this rule. No public hearing is planned, but one may be held at a time and place to be set in a later notice in the **Federal Register** if requested in writing and it is determined that the opportunity to make oral presentations will aid the rulemaking process.

Drafting Information

The principal persons involved in drafting this document are LCDR Carl A. Crampton, Project Manager, and Mr. Stephen H. Barber, Project Counsel, Office of the Chief Counsel.

Background

The Act to Prevent Pollution From Ships (33 U.S.C. 1901-1911) (the Act) requires the Secretary of the Department in which the Coast Guard is operating to administer and enforce the various Annexes of the International Convention for the Prevention of Pollution From Ships, 1973, as modified by the Protocol of 1978 relating thereto (MARPOL 73/78), done at London on February 17, 1978.

Annex V of MARPOL 73/78, entitled "Regulations for the Prevention of Pollution by Garbage From Ships," is intended to reduce the discharge of ship-generated garbage into the marine environment. A particular focus of Annex V is to prevent the discharge of plastics, including synthetic fishing nets and other debris which persist in the marine environment. The President signed Public Law 100-220, including title II, known as the "Marine Plastic Pollution Research and Control Act of 1987" (MPPRCA), on December 29, 1987, which provides authority to implement the requirements of Annex V of MARPOL 73/78. Annex V and MPPRCA became effective December 31, 1988.

The Coast Guard published an interim rule in the **Federal Register** of April 28, 1989 (54 FR 18384) to implement the requirements of Annex V of MARPOL 73/78 and the Act which concern the actual disposal of plastics and other garbage. In that interim rule, 33 CFR 151.55, 151.57, and 151.59 were reserved for a subsequent rulemaking to implement section 2107(b) of title II MPPRCA (33 U.S.C. 1903(b)). Under 33 U.S.C. 1903 (b)(2)(A)(i), the Secretary of the department in which the Coast Guard is operating is directed to require certain ships of United States registry or nationality, and ships operated under the authority of the United States, wherever located, "to maintain refuse record books and shipboard management plans, and to display placards which notify the crew and passengers of the requirements of Annex V." This interim final rule contains regulations to implement these requirements and to specify which ships must develop waste management plans and post informational placards for the crew and passengers.

In developing the interim regulations published on April 28, 1989, the Coast Guard received comments from government, industry, and private environmental organizations as to how the Coast Guard should implement these waste management, recordkeeping, and informational requirements. Those comments, along with data extracted from the economic and environmental evaluations conducted for the interim rule and the comments received on the Notice of Proposed Rulemaking (NPRM) for this rulemaking (54 FR 37084; September 6, 1989), were used to develop this final rule.

Regulatory Approach

These regulations provide the text to be inserted in the reserved sections in 33 CFR part 151 and revise 46 CFR part 25. The regulations use terms that are currently defined in 33 CFR 151.05. Some of the more important definitions are

repeated here as an aid to understanding these regulations.

"Ship" means a vessel of any type whatsoever, operating in the marine environment. This includes hydrofoils, air-cushion vehicles, submersibles, floating craft whether self-propelled or not, and fixed or floating drilling rigs and other platforms.

"Oceangoing ship" means a ship that—

(1) Is operated under the authority of the United States and engages in international voyages;

(2) Is operated under the authority of the United States and is certificated for ocean service;

(3) Is operated under the authority of the United States and is certificated for coastwise service beyond three miles from land;

(4) Is operated under the authority of the United States and operates at any time seaward of the outermost boundary of the territorial sea of the United States as defined in 33 CFR 2.05–5; or

(5) Is operated under the authority of a country other than the United States.

It should be noted that a Canadian or U.S. ship being operated exclusively on the Great Lakes of North America or their connecting and tributary waters or exclusively on the internal waters of the United States and Canada is not an oceangoing ship.

"Person" means an individual, firm, public or private corporation, partnership, association, State, municipality, commission, political subdivision of a State, or any interstate body.

The regulations apply only to U.S. ships because the Act's administration and enforcement provisions apply only to ships of U.S. registry or nationality or ships operating under the authority of the United States (33 U.S.C. 1903(b)(2)(A)(i)). The regulations apply primarily to oceangoing ships because garbage discharge within U.S. navigable waters has long been prohibited. In addition, ships operating within 3 miles of the coast have frequent opportunity to discharge their garbage to facilities ashore. Oceangoing ships also have a greater opportunity to discharge garbage without being detected. Finally, regulating all ships would create a large and unnecessary burden on the public.

In drafting these rules, the Coast Guard considered the sources and amounts of garbage produced by different categories of ships. The consideration revealed that, although a specific category of ship can produce a great deal of garbage, the amount of garbage discharged by an individual ship in that category may be low. These rules establish a scaled approach providing lesser requirements for ships creating smaller amounts of garbage per ship, while providing greater requirements for those ships that produce greater amounts of garbage per ship, particularly those that may be operating in areas where indiscriminate discharge overboard could be a temptation. The Coast Guard selected categories of ships for the requirements based on the estimated amount of garbage produced per ship and the area in which the ship operates.

Though these regulations are published as an interim final rule, the Coast Guard intends to monitor their implementation by ship operators and to consider necessary changes or additions in a future rulemaking.

Discussion of Comments and Changes

The rule as proposed in the Coast Guard's NPRM of September 6, 1989, was changed based on remarks received during the comment period which expired November 6, 1989. Each section of the interim final rule is described below and is accompanied by a discussion of the substantive changes since the NPRM was published. In addition, certain provisions have been reorganized or reworded for clarification without substantive change.

The interim final rule also contains some provisions that did not appear in the NPRM. These provisions are necessary to correct certain errors in part 151 as it appears in the current (July 1, 1989) edition of the Code of Federal Regulations. After the interim rule on Annex V was published (54 FR 18384; April 28, 1989), a second Coast Guard interim rule ("Implementation of the Shore Protection Act of 1988"; 54 FR 22546; May 24, 1989) was published which amended the subpart designations in part 151. The second interim rule failed to make the necessary changes to the text of part 151 to reflect the new subpart designations set forth in the second rule. This interim final rule corrects these errors without any substantive effect on this rulemaking.

33 CFR 151.05. Definitions

1. This section adds a definition for the term "Act".

2. One comment recommended that the term "length", as used in §§ 151.57(a)(1) and 151.59(a)(1), be defined as the length recorded on the ship's documentation/registration papers.

A definition of the term "length" has been added to § 151.05 to accommodate both ships that have been measured under 46 CFR part 69 and all other ships.

3. One comment suggested that the word "ship", as defined in § 151.05, was confusing because vessels of 26 to 40 feet in length are commonly referred to as "motorboats."

The definition of the term "ship" is used to align it with the definition of the term in the Act and Annex V.

Proposed 33 CFR 151.55, Recordkeeping Requirements

The Coast Guard received 24 comments questioning the beneficial effect of maintaining "Refuse Record Books" as a means of measuring and ensuring compliance. Four comments suggested that the applicability of § 151.55 be based on crew size, rather than ship length. The comments urged that crew size would be a better measurement of the possible amount of garbage generated by a ship. Five comments recommended that fixed or floating platforms be exempted from maintaining records under § 151.55 because platforms were already regulated by the Environmental Protection Agency and the Minerals Management Service. One recommended excluding fixed or floating platforms from the proposed requirement and either requiring a one-time certification by platform operators that the required equipment and procedures will be used or permitting self-examination of platforms to reduce the amount of effort required by the operators and the Coast Guard. Another comment suggested that the Environmental Protection Agency's National Pollution Discharge Elimination System (NPDES) and the Minerals Management Service's regulations adequately regulate pollutant discharges. Two comments recommended that the provision requiring the return of the Refuse Record Book be clarified. One comment suggested that the discharge records be maintained on board the ship for two years from the date of the last entry instead of being submitted to the Coast Guard. The commenter felt that submission to the Coast Guard would be unnecessarily burdensome. Two comments recommended that ships required to keep an official log be permitted to record discharges of garbage in that log instead of recording them separately. One comment suggested that the information required to be kept in the Refuse Record Book be specified in the regulation.

Review of the comments and the original intent of the regulations lead the Coast Guard to set aside the Refuse Record Book requirements in proposed § 151.55. The record keeping

requirements would not provide any more encouragement to comply with the regulations. Record Book entries would be difficult to verify because there are no independent means of detecting or quantifying amounts of garbage onboard the ship as there are for oil or noxious liquid substances. Waste management plans delineating the proper procedures for disposal of garbage on ships and placards informing passengers and crew of the discharge laws provide the necessary reminders without being unnecessarily burdensome.

Therefore, the proposed Refuse Record Book requirements have been set aside until the Coast Guard has the opportunity to monitor compliance with Annex V requirements and determine whether the use of refuse record books will measurably improve the management of refuse aboard ships. Waste management plans may include recording the disposition of garbage from ships as a means of ensuring the regulations are followed. The Coast Guard will continue to monitor compliance with the regulations and may propose recordkeeping requirements as necessary in the future.

33 CFR 151.57, Waste Management Plans

1. Proposed § 151.57(a) has been changed to make it clear that, under the Act (33 U.S.C. 1903(b)(2)(A)(i)), waste management plans are not required on foreign flag mobile offshore drilling units.

2. One comment suggested that having a waste management plan will not prevent illegal discharge of garbage at sea.

Though having a waste management plan does not ensure compliance, required planning for permissible disposal will aid in the prevention of illegal garbage discharge.

3. One comment suggested that the term "vessel" as used in § 151.55(b) be replaced with the term "ship" to be consistent with the other regulations.

This oversight has been corrected in the interim final rule.

4. One comment recommended that guidelines for waste management plans be stated in the regulations to avoid disagreements between ship operators and enforcement agents as to a plan's adequacy. Another comment urged the Coast Guard to permit the format and content of waste management plans to be left to the discretion of the ship operator.

Proposed § 151.57(c) was drafted as a broad guideline of the information to be included in a waste management plan, while permitting the format of the plan to be left to the discretion of the ship's master or the person in charge. The Coast Guard's position in this case is that specifying a performance standard would be less burdensome and more adaptable to the individual ship than would be an attempt to list each item that a plan should address. Therefore, § 151.57(c) of the interim final rule retains basically the same provisions as found in the NPRM.

5. One comment stated that a waste management plan requirement would be unrealistic for smaller ships, such as those in the fishing trade. Another comment recommended that a plan should not be required for ships in coastwise trade that have small crews and consequently don't generate much garbage.

The required plan can be as simple or complex as is necessary for the particular ship. For example, if all garbage is to be stored for discharge to a shore facility, then a statement to that effect would suffice as the waste management plan. Therefore, the applicability provisions in proposed § 151.57 are retained in the interim final rule.

6. One comment stated that their ship's personnel are already trained in proper waste disposal procedures and that, for them, a waste management plan would be unnecessary.

One of the primary reasons for a waste management plan is to provide a basis for training. The plan helps assure that the training is consistent with these regulations, the Act, and Annex V.

7. One comment recommended that the requirement in § 151.57(c)(3) for designating the person in charge of the ship be eliminated. Another comment wanted clarification of the term "person who is in charge of the ship" and of that person's responsibility with regard to the waste management plan. Two comments suggested that the waste management plan indicate the person in charge by position.

Proposed § 151.57(c)(3) inadvertently stated that the waste management plan must designate the person who is in charge of the ship. The plan should designate the person who is in charge of carrying out the plan. This change has been made in the interim final rule.

8. One comment stated that proposed § 151.57 implies that a ship contracted to transport garbage from an offshore platform to shore would be required to have a waste management plan for the garbage it is transporting, as well as a plan for its own ship-generated garbage.

There is no requirement to have more than one waste management plan. Ships are only required to maintain a waste management plan for garbage generated aboard the ship, not for garbage which they have been contracted to transport. Ships engaged in this activity are required to maintain a waste management plan if they meet the criteria set forth in § 151.57(a), i.e. 40 feet or more in length, documented under the laws of the United States or numbered by a State, and either engaged in commerce or equipped with a galley and berthing.

9. One comment opposed the inclusion of manned, fixed or floating platforms in the regulation requiring waste management plans because it would only add to the paperwork burden and operating costs without realizing any additional benefit or any reduction of garbage discharges into the sea.

A plan is required for manned, fixed or floating platforms for the same reasons it is required for other specified ships. The plan provides a basis for training and garbage management and helps assure that garbage is discharged according to these regulations, the Act, and Annex V.

10. One comment suggested that the waste management plan be incorporated in the placard required under § 151.59.

The plan may be added to the required placard, as long as the placard still meets the requirements of § 151.59.

33 CFR 151.59, Placards

1. New paragraphs (a)(2) and (b) contain substantive material added afer publication of the NPRM. This interim final rule requests comments on these additions. See the discussion of these changes earlier in this preamble.

2. One comment objected to placing a placard on board because it would be unnecessary, ineffective, and offensive. Instead, the comment recommended that the garbage disposal requirements be announced through the existing media.

The placard is required by the Act to provide a constant reminder of the requirements of Annex V for the crew and a source of information for passengers otherwise unfamiliar with Annex V.

3. One comment recommended that the placard include an additional prohibition for ships on the Great Lakes that states: "Discharge of any refuse into any waters or throwing anything overboard at any time is prohibited." The comment reflects efforts by regional, State, and local entities to address this problem.

The Coast Guard purposely limited the number of items to be listed so that placards could be succinct and quickly read. However, to notify the reader that regional, State, and local restrictions also may apply, the interim final rule

(§ 151.59(c)(2)(vii)) adds an item to that effect.

4. One comment recommended that proposed § 151.59 be divided for clarity into two sections—applicability and requirements.

Section 151.59 in the interim final rule has been divided accordingly.

5. One comment stated that an example of the placard would be helpful and asked whether graphic depictions may be used on the placard.

Section 151.59 states the content, minimum placard and letter size, and material criteria for the placard. Except for compliance with these provisions, the placard may be designed as the individual ship operator sees fit. Graphic depictions may be used as long as the information under § 151.59(c)(2), stated in letters of the prescribed size, is also included on the placard.

6. One comment requested that fixed or floating platforms be exempted from the placard posting requirement. Another comment questioned whether the placard requirements were intended to apply to fixed or floating platforms.

The Act in its definition of the term "ship" includes fixed or floating platforms. Section 151.59(a) has been revised to clearly state this applicability.

7. One comment mentioned that smaller ships, such as those engaged in fishing, have limited space on which to post a placard.

The minimum size requirements for placards (i.e., nine inches wide by four inches high) were drafted to address this problem on smaller ships.

8. One comment stated that their ship's personnel were already trained in proper garbage disposal procedures and that a placard, therefore, was unnecessary on their ship.

The Act intended that a placard be displayed not just for the benefit of the crew but for persons other than the crew, as well. Even for a well trained crew, the placard serves as a constant reminder of the discharge rules and penalties.

9. One comment suggested that the placard state that incinerator ash may be discharged only on land.

Neither the Act nor the existing regulations in 33 CFR part 151 impose this more stringent requirement. As mentioned at the end of the "Regulatory Approach" section of this preamble, the Coast Guard intends to monitor the implementation of these regulations and may consider this, as well as other, problems in a separate rulemaking in the future.

46 CFR 25.50–1, Criteria

1. No comments were received on this section. The note to this section is shortened to eliminate information repeated in the text of § 25.50–1.

E.O. 12291 and DOT Regulatory Policies and Procedures

This interim final rule is considered to be non-major under Executive Order 12291 and nonsignificant under the Department of Transportation (DOT) regulatory policies and procedures (44 FR 11034; February 26, 1979). A final Regulatory Evaluation has been prepared and placed in the rulemaking docket. It may be inspected or copied at the Office of the Marine Safety Council, U.S. Coast Guard, Room 3314, 2100 Second Street SW., Washington, DC 20593–0001 between 8 a.m. and 3 p.m., Monday through Friday, except Federal holidays. The telephone number is (202) 267–1477.

One comment was received on the draft Regulatory Evaluation prepared for the NPRM. The comment contended that the number of passenger vessels certificated for ocean and coastwise service that was used to calculate costs was too low. After reviewing its statistics, the Coast Guard believes the figures used in the draft Regulatory Evaluation are current.

By eliminating the requirement to maintain a Refuse Record Book, the interim final rule will reduce the costs estimated in the NPRM. Other changes to the rule made since publication of the NPRM should have no impact on costs and impose no new burdens.

The total annual projected cost for all ships subject to the interim final rule is estimated to be $4.365 million. This cost is allocated as follows: Merchant vessels, $0.059 million; passenger vessels, $2.247 million; towing vessels, $.024 million; fishing vessels, $.494 million; recreational boats, $1.308 million; vessels engaged in offshore oil and gas operations and manned fixed or floating platforms, $.221 million; and research and other miscellaneous classes of vessels, $.012 million. The differences among these figures are due primarily to the differences in population of each type of ship subject to these requirements.

These regulations should benefit the environment by reducing the number of improper discharges. The amount of that benefit, however, is not quantifiable.

Regulatory Flexibility Act

A regulatory flexibility analysis was conducted in accordance with the Regulatory Flexibility Act (5 U.SC. 601 *et seq.*) to evaluate the impact of the interim final rule on small entitites. The analysis has been made part of the final Regulatory Evaluation. In the analysis, an entity is considered small, under this definition, if its annual receipts do not exceed $3.5 million.

The Coast Guard does not have accurate information on how many ships would qualify as small entities. No comments were received on the draft regulatory flexibility analysis. However, the Coast Guard estimates that this rule will affect 2,200 miscellaneous U.S. flag vessels of less than 1,000 gross tons, 14,800 fishing vessels, and 600 vessels engaged in offshore oil and gas operations.

Most vessels which are small entities will have to comply with the requirements for placards and waste management plans. The Coast Guard estimates that the cost of compliance will average less than 0.6 percent of the net income or the operational cost of each small entity. Therefore, The Coast Guard certifies under section 605(b) of the Regulatory Flexibility Act (5 U.S.C. 605(b)) that this interim final rule will not have a significant economic impact on a substantial number of small entities.

Paperwork Reduction Act

This rulemaking contains information collection requirements. These items have been submitted to the Office of Management and Budget (OMB) for review under the Paperwork Reduction Act of 1980 (44 U.S.C. 3501 *et seq.*) and have been approved by OMB. The section number and the corresponding OMB approval number are § 151.57—OMB Control No. 2115–0120.

Federalism Implications

This action has been analyzed in accordance with the principles and criteria contained in Executive Order 12612, and it has been determined that the interim final rule does not have sufficient federalism implications to warrant the preparation of a Federalism Assessment.

Environmental Assessment

The Coast Guard has considered the environmental impact of the interim final rule and concluded that, under section 2.B.2 of Commandant Instruction M16475.1B, this rule is categorically excluded from further environmental documentation. A Categorical Exclusion Determination statement has been prepared and is on file in the regulatory docket. (See address under the "E.O. 12291 and DOT Regulatory Policies and Procedures" section of this preamble.)

The regulations are administrative in nature and are expected to have some positive but no negative impact on the environment. The regulations should contribute to the reduction of the

occurrence of plastic, as well as other ship-generated garbage, in the marine environment. The placarding requirement (§ 151.59) should remind persons of their pollution prevention responsibilities under the law and the waste management plan (§ 151.57) should reduce the number of unlawful discharges.

Regulatory Information Number (RIN)

A regulatory information number has been assigned to this regulatory action and it is listed in the Unified Agenda of Federal Regulations. The Regulatory Information Service Center (RISC) publishes the Unified Agenda in April and October of each year. The RIN number listed at the heading of this document can be used to cross reference this action with the Unified Agenda.

List of Subjects

33 CFR Part 151

Oil pollution, Reporting and recordkeeping requirements, Water pollution control.

46 CFR Part 25

Fire prevention, Marine safety.

For the reasons set out in the preamble, 33 CFR part 151 and 46 CFR part 25 are amended as follows:

TITLE 33—[AMENDED]

PART 151—[AMENDED]

1. The authority citation for part 151, subpart A, continues to read as follows:

Authority: 33 U.S.C. 1321(j(1)(C) and 1903(b); E.O. 11735, 3 CFR 1971–1975 Comp., p. 793; 49 CFR 1.46.

§ 151.01 [Amended]

2. In § 151.01, by removing the word "part" and adding, in its place, the word "subpart".

§ 151.03 [Amended]

3. In § 151.03, by removing the word "part" and adding, in its place, the word "subpart".

§ 151.04 [Amended]

4. In § 151.04, by removing the word "part" wherever it appears and by adding, in its place, the word "subpart".

5. In § 151.05, in the introductory text, by removing the word "part" and adding, in its place, the word "subpart"; in the definition of the term "Port", by removing the word "part" wherever it appears and adding, in its place, the word "subpart"; by removing the second definitions of the terms "Special area" and "Terminal"; by amending the section to arrange all defined terms in alphabetical order; and by adding a definition of the terms "Act" and "Length" in alphabetical order to read as follows:

§ 151.05 Definitions.

* * * * *

Act means the Act to Prevent Pollution from Ships, as amended (33 U.S.C. 1901–1911).

* * * * *

Length means the horizontal distance between the foremost part of a ship's stem to the aftermost part of its stern, excluding fittings and attachments.

* * * * *

§ 151.07 [Amended]

6. In § 151.07(d), by removing the word "part" and adding, in its place, the word "subpart".

§ 151.09 [Amended]

7. In § 151.09, in the introductory text of paragraph (a), by removing the words "this subpart applies" and adding, in their place, "§§ 151.09 through 151.25 apply"; and, in the introductory text of paragraph (b), by removing the words "This subpart does" and adding, in their place, the words "Sections 151.09 through 151.25 do".

§ 151.13 [Amended]

8. In § 151.13, in the introductory text of paragraph (a), by removing the words "this subpart" and adding, in their place, "§§ 151.09 through 151.25"

§ 151.23 [Amended]

9. In § 151.23, in the introductory text of paragraph (a), by removing the words "to which this part applies".

§ 151.25 [Amended]

10. In § 151.25, in paragraph (a), by removing "; to which this part applies;"; in paragraph (b), by removing "part," and adding, in its place, the word "section"; in the introductory text of paragraph (d), by removing the word "part" and adding, in its place, the word "section"; in the introductory text of paragraph (e), by removing the word "part" and adding, in its place, the word "section"; and, in the introductory text of paragraph (f), by removing the word "part" and adding in its place, the word "section".

§ 151.30 [Amended]

11. In § 151.30, in the introductory text of paragraph (a), by removing the words "this subpart applies" and adding, in their place, ", §§ 151.30 through 151.49 apply"; and, in the introductory text of paragraph (b), by removing the words "This subpart does" and adding, in their place, the words "sections 151.30 through 151.49 do".

§ 151.45 [Amended]

12. In § 151.45 (d)(1) and (d)(2), by removing the words "this part" and adding, in their place, "§§ 151.30 through 151.49".

§ 151.51 [Amended]

13. In § 151.51, in the introductory text of paragraph (a), by removing the words "this subpart applies" and adding, in their place, "§§ 151.51 through 151.77 apply"; and, in the introductory text of paragraph (b), by remvoing the words "This subpart does" and adding, in their place, the words "sections 151.51 through 151.77 do".

§ 151.53 [Amended]

14. In § 151.53, in the introductory text, by removing the words "this subpart" and adding, in their place, "§§ 151.51 through 151.77".

15. By adding a new § 151.57 to read as follows:

§ 151.57 Waste management plans

(a) This section applies to the following:

(1) Each manned oceangoing ship (other than a fixed or floating platform) of 40 feet or more in length that is documented under the laws of the United States or numbered by a state and that either is engaged in commerce or is equipped with a galley and berthing.

(2) Each manned fixed or floating platform that is—

(i) Documented under the laws of the United States; or

(ii) Operating under the authority of the United States, including, but not limited to, a lease or permit issued by an agency of the United States.

(b) The master or person in charge of a ship under paragraphs (a)(1) and (a)(2) of this section shall ensure that the ship is not operated unless a waste management plan meeting paragraph (c) of this section is on the ship and that each person handling garbage follows the plan.

(c) Each waste management plan under paragraph (b) of this section must be in writing and—

(1) Provide for the discharge of garbage by means that meet Annex V of MARPOL 73/78, the Act, and §§ 151.51 through 151.77;

(2) Describe procedures for collecting, processing, storing, and discharging garbage; and

(3) Designate the person who is in charge of carrying out the plan.

(Approved by the Office of Management and Budget under control number 2115–0120)

16. By adding a new § 151.59 to read as follows:

§ 151.59 Placards.

(a) This section applies to the following:

(1) Each manned U.S. ship (other than a fixed or floating platform) that is 26 feet or more in length.

(2) Each manned fixed or floating platform that is—

(i) Documented under the laws of the United States; or

(ii) Operating under the authority of the United States, including, but not limited to, a lease or permit issued by an agency of the United States.

(b) The master or person in charge of each ship under paragraphs (a)(1) and (a)(2) of this section shall ensure that one or more placards meeting the requirements of paragraph (c) of this section are displayed in prominent locations and in sufficient numbers so that they can be read by the crew and passengers. These locations must be readily accessible to the intended reader and may include embarkation points, food service facilities, garbage handling spaces, and common spaces on deck. If the Captain of the Port determines that the number or location of the placards is insufficient to adequately inform crew and passengers, the Captain of the Port may require additional placards and may specify their locations.

(c) Each placard must—

(1) Be at least nine inches wide by four inches high, made of a durable material, and lettered with letters at least ⅛ inch high; and

(2) Notify the reader of the following:

(i) The discharge of plastic or garbage mixed with plastic into any waters is prohibited.

(ii) The discharge of all garbage is prohibited in the navigable waters of the United States and, in all other waters, within three nautical miles of the nearest land.

(iii) The discharge of dunnage, lining, and packing materials that float is prohibited within 25 nautical miles of the nearest land.

(iv) Other unground garbage may be discharged beyond 12 nautical miles from the nearest land.

(v) Other garbage ground to less than one inch may be discharged beyond three nautical miles of the nearest land.

(vi) A person who violates the above requirements is liable for a civil penalty of up to $25,000, a fine of up to $50,000, and imprisonment for up to five years for each violation.

(vii) Regional, State, and local restrictions on garbage discharges also may apply.

§ 151.61 [Amended]

17. In § 151.61, in the introductory text, by removing the words "to which this subpart applies".

§ 151.63 [Amended]

18. In § 151.63, in the introductory text of paragraph (b), by removing the words "this subpart" and adding, in their place, "§§ 151.51 through 151.77".

§ 151.66 [Amended]

19. In § 151.66, by removing the words "to which this subpart applies".

§ 151.67 [Amended]

20. In § 151.67, by removing the words "to which this subpart applies".

§ 151.77 [Amended]

21. In § 151.77, in the introductory text, by removing the words "of this subpart".

Appendix A to §§ 151.51 through 151.77 [Amended]

22. In the heading for appendix A to §§ 151.51 through 151.77, by removing the words "Subpart A of Part 151" and adding, in their place, "§§ 151.51 through 151.77".

TITLE 46—[AMENDED]

PART 25—[AMENDED]

23. The authority citation for part 25 continues to read as follows:

Authority: 33 U.S.C. 1903(b), 46 U.S.C. 3306, 4104, and 4302; 49 CFR 1.46.

24. By revising § 25.50–1 to read as follows:

§ 25.50–1 Criteria.

Each uninspected vessel must meet the garbage discharge, waste management plan, and placard requirements of 33 CFR Part 151.

Note: 33 CFR 151.67 prohibits the discharge of plastic or garbage mixed with plastic into the sea or the navigable waters of the United States. "Plastic" and "garbage" are defined in 33 CFR 151.05.

Dated: April 9, 1990.

J.D. Sipes,

Rear Admiral, U.S. Coast Guard, Chief, Office of Marine Safety, Security and Environmental Protection.

[FR Doc. 90–10150 Filed 5–1–90; 8:45 am]

BILLING CODE 4910–14–M

Reader Aids

Federal Register

Vol. 55, No. 85

Wednesday, May 2, 1990

INFORMATION AND ASSISTANCE

Federal Register

Index, finding aids & general information	523-5227
Public inspection desk	523-5215
Corrections to published documents	523-5237
Document drafting information	523-5237
Machine readable documents	523-3447

Code of Federal Regulations

Index, finding aids & general information	523-5227
Printing schedules	523-3419

Laws

Public Laws Update Service (numbers, dates, etc.)	523-6641
Additional information	523-5230

Presidential Documents

Executive orders and proclamations	523-5230
Public Papers of the Presidents	523-5230
Weekly Compilation of Presidential Documents	523-5230

The United States Government Manual

General information	523-5230

Other Services

Data base and machine readable specifications	523-3408
Guide to Record Retention Requirements	523-3187
Legal staff	523-4534
Library	523-5240
Privacy Act Compilation	523-3187
Public Laws Update Service (PLUS)	523-6641
TDD for the deaf	523-5229

FEDERAL REGISTER PAGES AND DATES, MAY

18073-18302.....1
18303-18584.....2

CFR PARTS AFFECTED DURING MAY

At the end of each month, the Office of the Federal Register publishes separately a List of CFR Sections Affected (LSA), which lists parts and sections affected by documents published since the revision date of each title.

3 CFR

Proclamations:
6030 (See Proc. 6123).....18075
6122.....18073
6123.....18075
Executive Orders:
12675 (Amended by EO 12712).....18077
12712.....18077
Administrative Orders:
Memorandums:
Apr. 26, 1990.....18298

7 CFR

2.....18097
400.....18097
927.....18097
1012.....18098
1139.....18303
Proposed Rules:
301.....18342

9 CFR

71.....18099
82.....18099
Proposed Rules:
94.....18342
114.....18345

10 CFR

590.....18227

14 CFR

23.....18570
39.....18304, 18305
71.....18100
Proposed Rules:
21.....18346
29.....18346
39.....18349, 18350
71.....18122, 18123
75.....18351

15 CFR

Proposed Rules:
290.....18124

17 CFR

200.....18306
230.....18306

18 CFR

271.....18100

19 CFR

Proposed Rules:
122.....18352
133.....18353

21 CFR

179.....18227, 18538
510.....18330
558.....18330

24 CFR

49.....18490
203.....18490
207.....18490
213.....18490
221.....18490
234.....18490
237.....18490
510.....18490
570.....18490

25 CFR

Proposed Rules:
61.....18128

28 CFR

Proposed Rules:
0.....18130

33 CFR

151.....18578

37 CFR

1.....18230
Proposed Rules:
301.....18131
306.....18131

40 CFR

52.....18106-18110
61.....18330
261.....18496
271.....18496
272.....18112
280.....18566
302.....18496
Proposed Rules:
52.....18131
82.....18256
261.....18132, 18507
271.....18507
302.....18507

42 CFR

405.....18331

43 CFR

Public Land Orders:
1697 (Revoked).....18335
6777.....18335

44 CFR

64.....18113, 18336
65.....18115, 18116
67.....18117
Proposed Rules:
67.....18138

46 CFR

25.....18578

Proposed Rules:

58.....18142
160.....18142

47 CFR

15.....18339

Proposed Rules:

21.....18354
43.....18354
73.....18355
74.....18354
78.....18354
94.....18354

48 CFR

1501.....18340

Proposed Rules:

9.....18296

49 CFR

Proposed Rules:

171.....18438
172.....18438
173.....18438
174.....18546
175.....18546
177.....18546
396.....18355

50 CFR

658.....18120

Proposed Rules:

17.....18357

LIST OF PUBLIC LAWS

Note: No public bills which have become law were received by the Office of the Federal Register for inclusion in today's **List of Public Laws.**

Last List April 27, 1990

New edition .... Order now !

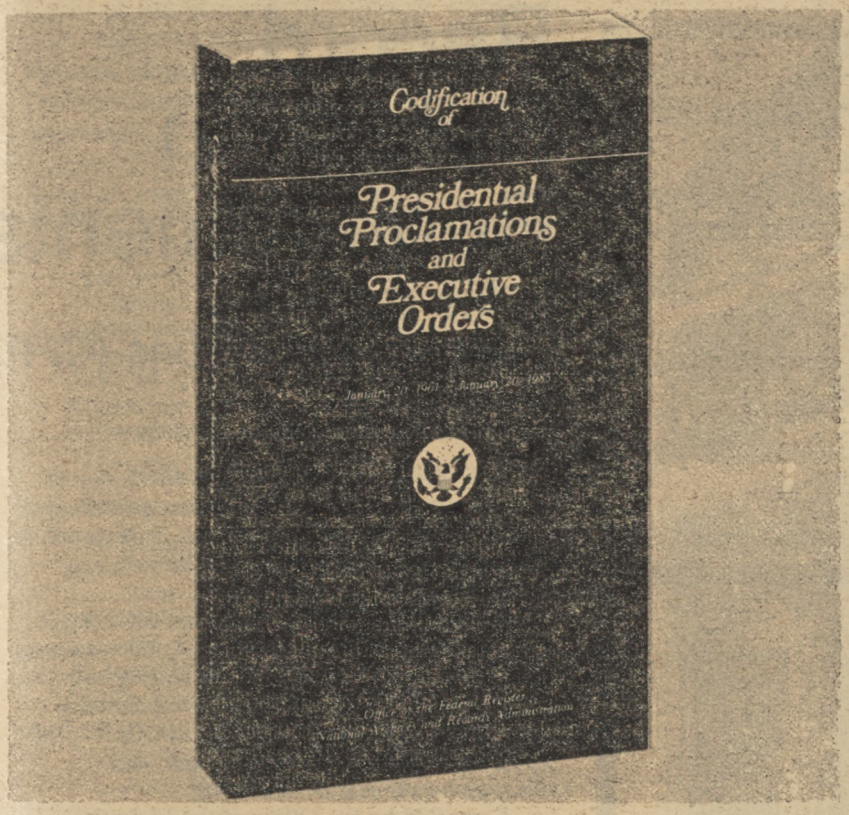

For those of you who must keep informed about **Presidential Proclamations and Executive Orders,** there is a convenient reference source that will make researching these documents much easier.

Arranged by subject matter, this edition of the *Codification* contains proclamations and Executive orders that were issued or amended during the period April 13, 1945, through January 20, 1989, and which have a continuing effect on the public. For those documents that have been affected by other proclamations or Executive orders, the codified text presents the amended version. Therefore, a reader can use the *Codification* to determine the latest text of a document without having to "reconstruct" it through extensive research.

Special features include a comprehensive index and a table listing each proclamation and Executive order issued during the 1945–1989 period—along with any amendments—an indication of its current status, and, where applicable, its location in this volume.

Published by the Office of the Federal Register, National Archives and Records Administration

Order from Superintendent of Documents, U.S. Government Printing Office, Washington, DC 20402–9325

Order Processing Code:
***6661**

Superintendent of Documents **Publications** Order Form

P3

Charge your order. It's easy!

To fax your orders and inquiries–(202) 275-0019

☐ **YES,** please send me the following indicated publication:

_____ copies of the CODIFICATION OF PRESIDENTIAL PROCLAMATIONS AND EXECUTIVE ORDERS, S/N 069-000-00018-5 at $32.00 each.

The total cost of my order is $_____. (International customers please add 25%.) Prices include regular domestic postage and handling and are good through 1/90. After this date, please call Order and Information Desk at 202-783-3238 to verify prices.

(Company or personal name) (Please type or print)

(Additional address/attention line)

(Street address)

(City, State, ZIP Code)

(_____)
(Daytime phone including area code)

Please Choose Method of Payment:

☐ Check payable to the Superintendent of Documents

☐ GPO Deposit Account ☐☐☐☐☐☐☐☐–☐

☐ VISA or MasterCard Account

☐☐☐☐☐☐☐☐☐☐☐☐☐☐☐☐☐☐☐☐

(Credit card expiration date)

Thank you for your order!

(Signature)

89

Mail To: Superintendent of Documents, Government Printing Office, Washington, DC 20402-9325

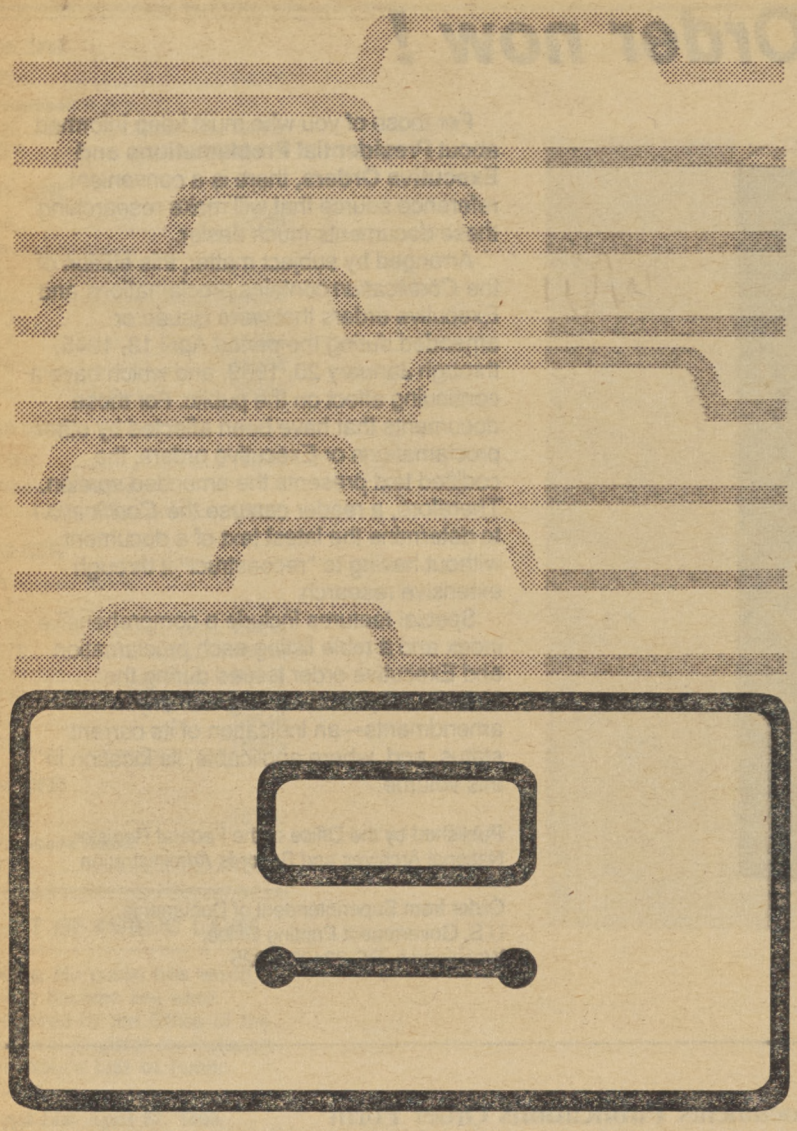

Guide to Record Retention Requirements

in the Code of Federal Regulations (CFR)

GUIDE: Revised January 1, 1989
SUPPLEMENT: Revised January 1, 1990

The GUIDE and the SUPPLEMENT should be used together. This useful reference tool, compiled from agency regulations, is designed to assist anyone with Federal recordkeeping obligations.

The various abstracts in the GUIDE tell the user (1) what records must be kept, (2) who must keep them, and (3) how long they must be kept.

The GUIDE is formatted and numbered to parallel the CODE OF FEDERAL REGULATIONS (CFR) for uniformity of citation and easy reference to the source document.

Compiled by the Office of the Federal Register, National Archives and Records Administration.

Order from Superintendent of Documents, U.S. Government Printing Office, Washington, DC 20402–9325.

Superintendent of Documents Publication Order Form

Order Processing Code: ***6788**

Charge your order. It's easy! MasterCard VISA

To fax your orders and inquiries. 202-275-0019

☐ **YES,** please send me the following indicated publication:

_____copies of the 1989 GUIDE TO RECORD RETENTION REQUIREMENTS IN THE CFR S/N 069–000–00020–7 at $12.00 each.

_____copies of the 1990 SUPPLEMENT TO THE GUIDE, S/N 069–000–00025–8 at $1.50 each.

1. The total cost of my order is $_____ (International customers please add 25%). All prices include regular domestic postage and handling and are good through 8/90. After this date, please call Order and Information Desk at 202–783–3238 to verify prices.

Please Type or Print

2. _____
(Company or personal name)

_____
(Additional address/attention line)

_____
(Street address)

_____
(City, State, ZIP Code)

(_____) _____
(Daytime phone including area code)

3. Please choose method of payment:

☐ Check payable to the Superintendent of Documents

☐ GPO Deposit Account ☐☐☐☐☐☐☐–☐

☐ VISA or MasterCard Account

☐☐☐☐☐☐☐☐☐☐☐☐☐☐☐☐

_____ ***Thank you for your order!***
(Credit card expiration date)

_____
(Signature)

2/90

4. Mail To: Superintendent of Documents, Government Printing Office, Washington, DC 20402–9325

Would you like to know...

if any changes have been made to the Code of Federal Regulations or what documents have been published in the Federal Register without reading the Federal Register every day? If so, you may wish to subscribe to the *LSA (List of CFR Sections Affected),* the *Federal Register Index,* or both.

LSA • List of CFR Sections Affected

The LSA (List of CFR Sections Affected) is designed to lead users of the Code of Federal Regulations to amendatory actions published in the Federal Register. The LSA is issued monthly in cumulative form. Entries indicate the nature of the changes—such as revised, removed, or corrected. $21.00 per year

Federal Register Index

The index, covering the contents of the daily Federal Register, is issued monthly in cumulative form. Entries are carried primarily under the names of the issuing agencies. Significant subjects are carried as cross-references. $19.00 per year.

A finding aid is included in each publication which lists Federal Register page numbers with the date of publication in the Federal Register.

Note to FR Subscribers
FR Indexes and the LSA (List of CFR Sections Affected) are mailed automatically to regular FR subscribers.



Superintendent of Documents Subscriptions Order Form

Order Processing Code
*6483

Charge your order. It's easy!

Charge orders may be telephoned to the GPO order desk at (202) 783-3238 from 8:00 a.m. to 4:00 p.m eastern time, Monday-Friday (except holidays).

☐ **YES,** please send me the following indicated subscriptions:

☐ LSA • List of CFR Sections Affected—one year as issued—$21.00 (LCS)

☐ Federal Register Index—one year as issued—$19.00 (FRSU)

1. The total cost of my order is $_____. All prices include regular domestic postage and handling and are subject to change. International customers please add 25%.

Please Type or Print

2. _____
(Company or personal name)

_____
(Additional address/attention line)

_____
(Street address)

_____
(City, State, ZIP Code)

(_____)
(Daytime phone including area code)

3. **Please choose method of payment:**

☐ Check payable to the Superintendent of Documents

☐ GPO Deposit Account ☐☐☐☐☐☐☐–☐

☐ VISA or MasterCard Account

☐☐☐☐☐☐☐☐☐☐☐☐☐☐☐☐

_____
(Credit card expiration date)

Thank you for your order!

_____
(Signature)

(REV 10 1 88)

4. **Mail To:** Superintendent of Documents, Government Printing Office, Washington, DC 20402-9371

The authentic text behind the news . . .

The Weekly Compilation of **Presidential Documents**

Administration of George Bush

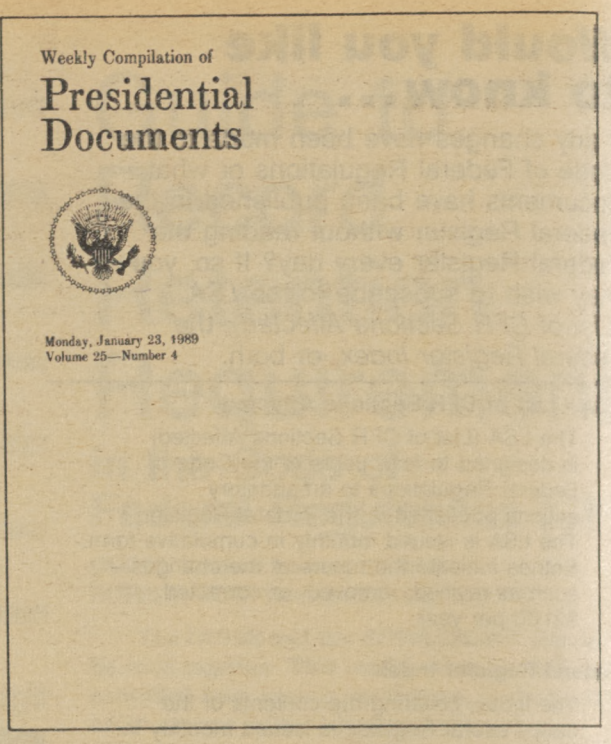

This unique service provides up-to-date information on Presidential policies and announcements. It contains the full text of the President's public speeches, statements, messages to Congress, news conferences, personnel appointments and nominations, and other Presidential materials released by the White House.

The Weekly Compilation carries a Monday dateline and covers materials released during the preceding week. Each issue contains an Index of Contents and a Cumulative Index to Prior Issues.

Separate indexes are published periodically. Other features include lists of acts approved by the President, nominations submitted to the Senate, a checklist of White House press releases, and a digest of other Presidential activities and White House announcements.

Published by the Office of the Federal Register, National Archives and Records Administration.

Superintendent of Documents Subscriptions Order Form

Order Processing Code
*6466

Charge your order. It's easy!

MasterCard VISA

Charge orders may be telephoned to the GPO order desk at (202) 783-3238 from 8:00 a.m. to 4:00 p.m. eastern time, Monday-Friday (except holidays)

☐ **YES,** please enter my subscription for one year to the **WEEKLY COMPILATION OF PRESIDENTIAL DOCUMENTS (PD)** so I can keep up to date on Presidential activities.

☐ $96.00 First Class ☐ $55.00 Regular Mail

1. The total cost of my order is $_____ All prices include regular domestic postage and handling and are subject to change. International customers please add 25%.

Please Type or Print

2. _____
(Company or personal name)

_____
(Additional address/attention line)

_____
(Street address)

_____
(City, State, ZIP Code)

(_____) _____
(Daytime phone including area code)

3. **Please choose method of payment:**

☐ Check payable to the Superintendent of Documents

☐ GPO Deposit Account ☐☐☐☐☐☐–☐

☐ VISA or MasterCard Account

☐☐☐☐☐☐☐☐☐☐☐☐☐☐☐☐

_____ ***Thank you for your order!***
(Credit card expiration date)

_____
(Signature) (Rev. 1-20-89)

4. **Mail To:** Superintendent of Documents, Government Printing Office, Washington, D.C. 20402-9371