4-30-90
Vol. 55 No. 83

federal register

Monday
April 30, 1990

United States
Government
Printing Office
SUPERINTENDENT
OF DOCUMENTS
Washington, DC 20402

OFFICIAL BUSINESS
Penalty for private use, $300

SECOND CLASS NEWSPAPER

Postage and Fees Paid
U.S. Government Printing Office
(ISSN 0097-6326)

4-30-90
Vol. 55 No. 83
Pages 17927-18072

federal register

Monday
April 30, 1990

Briefing on How To Use the Federal Register
For information on a briefing in Washington, DC, see announcement on the inside cover of this issue.

FEDERAL REGISTER Published daily, Monday through Friday, (not published on Saturdays, Sundays, or on official holidays), by the Office of the Federal Register, National Archives and Records Administration, Washington, DC 20408, under the Federal Register Act (49 Stat. 500, as amended; 44 U.S.C. Ch. 15) and the regulations of the Administrative Committee of the Federal Register (1 CFR Ch. I). Distribution is made only by the Superintendent of Documents, U.S. Government Printing Office, Washington, DC 20402.

The **Federal Register** provides a uniform system for making available to the public regulations and legal notices issued by Federal agencies. These include Presidential proclamations and Executive Orders and Federal agency documents having general applicability and legal effect, documents required to be published by act of Congress and other Federal agency documents of public interest. Documents are on file for public inspection in the Office of the Federal Register the day before they are published, unless earlier filing is requested by the issuing agency.

The seal of the National Archives and Records Administration authenticates this issue of the **Federal Register** as the official serial publication established under the Federal Register Act. 44 U.S.C. 1507 provides that the contents of the **Federal Register** shall be judicially noticed.

The **Federal Register** will be furnished by mail to subscribers for $340 per year in paper form; $195 per year in microfiche form; or $37,500 per year for the magnetic tape. Six-month subscriptions are also available at one-half the annual rate. The charge for individual copies in paper or microfiche form is $1.50 for each issue, or $1.50 for each group of pages as actually bound, or $175.00 per magnetic tape. Remit check or money order, made payable to the Superintendent of Documents, U.S. Government Printing Office, Washington, DC 20402, or charge to your GPO Deposit Account or VISA or Mastercard.

There are no restrictions on the republication of material appearing in the **Federal Register.**

How To Cite This Publication: Use the volume number and the page number. Example: 55 FR 12345.

SUBSCRIPTIONS AND COPIES

PUBLIC

Subscriptions:

Paper or fiche	202–783–3238
Magnetic tapes	275–3328
Problems with public subscriptions	275–3054

Single copies/back copies:

Paper or fiche	783–3238
Magnetic tapes	275–3328
Problems with public single copies	275–3050

FEDERAL AGENCIES

Subscriptions:

Paper or fiche	523–5240
Magnetic tapes	275–3328
Problems with Federal agency subscriptions	523–5240

For other telephone numbers, see the Reader Aids section at the end of this issue.

THE FEDERAL REGISTER
WHAT IT IS AND HOW TO USE IT

FOR: Any person who uses the Federal Register and Code of Federal Regulations.

WHO: The Office of the Federal Register.

WHAT: Free public briefings (approximately 3 hours) to present:
1. The regulatory process, with a focus on the Federal Register system and the public's role in the development of regulations.
2. The relationship between the Federal Register and Code of Federal Regulations.
3. The important elements of typical Federal Register documents.
4. An introduction to the finding aids of the FR/CFR system.

WHY: To provide the public with access to information necessary to research Federal agency regulations which directly affect them. There will be no discussion of specific agency regulations.

WASHINGTON, DC

WHEN: May 24, at 9:00 a.m.
WHERE: Office of the Federal Register, First Floor Conference Room, 1100 L Street NW., Washington, DC.
RESERVATIONS: 202–523–5240.

Contents

Federal Register
Vol. 55, No. 83
Monday, April 30, 1990

Agriculture Department
NOTICES
Import quotas and fees:
Sugar—
Quota period and amount modification, 18011

Alcohol, Tobacco and Firearms Bureau
RULES
Alcohol, tobacco, and other excise taxes:
Tax credit for wine or flavor content of distilled spirits products, 18058
Alcoholic beverages:
Foreign nongeneric names of geographic significance used in designation of wines, 17960

Army Department
See Engineers Corps

Arts and Humanities, National Foundation
See National Foundation on the Arts and the Humanities

Centers for Disease Control
NOTICES
Grants and cooperative agreements; availability, etc.:
State-based diabetes control program, 18027

Coast Guard
RULES
Ports and waterways safety:
Ohio River, Louisville, KY; safety zone, 17969
Regattas and marine parades:
Fox 49 River Grand Prix, 17969
NOTICES
Meetings:
Lower Mississippi River Waterway Safety Advisory Committee, 18045
Navigation Safety Advisory Council; correction, 18055

Commerce Department
See International Trade Administration; Minority Business Development Agency; National Oceanic and Atmospheric Administration

Committee for the Implementation of Textile Agreements
NOTICES
Cotton, wool, and man-made textiles:
Mexico; correction, 18055

Commodity Futures Trading Commission
RULES
Self-regulatory organization automated systems; reporting and recordkeeping requirements, 17932

Consumer Product Safety Commission
NOTICES
Meetings; Sunshine Act, 18054
(2 documents)

Defense Department
See also Engineers Corps; Navy Department
NOTICES
Agency information collection activities under OMB review, 18013
Meetings:
Science Board, 18013
Science Board task force, 18013

Drug Enforcement Administration
NOTICES
Applications, hearings, determinations, etc.:
Bell Apothecary, 18037
Ungar, James R., M.D., 18037

Employment and Training Administration
NOTICES
Adjustment assistance:
AVX Tantalum Corp. et al., 18037

Energy Department
See also Federal Energy Regulatory Commission; Hearings and Appeals Office, Energy Department
NOTICES
Grants and cooperative agreements; availability, etc.:
Idaho—
Teacher's skill enhancement program, 18015
University reactor sharing program, 18015
Natural gas exportation and importation:
Boston Gas Co.; correction, 18055

Engineers Corps
NOTICES
Meetings:
Environmental Advisory Board, 18013

Environmental Protection Agency
PROPOSED RULES
Air quality implementation plans; approval and promulgation; various States:
Texas, 18005
NOTICES
Air quality; prevention of significant deterioration (PSD):
Permit determinations, etc.—
Region I, 18025
Water pollution control:
Clean Water Act—
Individual control strategies (ICSs); lists of waters; approvals and disapprovals, 18025

Executive Office of the President
See Management and Budget Office

Federal Aviation Administration
RULES
Airworthiness directives:
Boeing, 17927, 17929
(3 documents)
Texas Instruments, 17930
Restricted areas; correction, 17931
PROPOSED RULES
Airworthiness directives:
Aerospatiale, 17995
Airbus Industrie, 17987, 17989
(2 documents)
Boeing, 17990, 17997
(2 documents)

EMBRAER, 17991
SAAB-Scania, 17993, 17994
(2 documents)
Teledyne Continental Motors, 17988
Rulemaking petitions; summary and disposition, 17987
NOTICES
Advisory circulars; availability, etc.:
Transport category airplanes—
Pilot compartment view, 18045

Federal Communications Commission
RULES
Radio stations; table of assignments:
Hawaii, 17970
PROPOSED RULES
Common carrier services:
Tariffs—
Interstate long-distance marketplace competition, 18007
Radio stations; table of assignments:
Georgia, 18009
NOTICES
Agency information collection activities under OMB review, 18025
Applications, hearings, determinations, etc.:
Alpha & Omega Educational Broadcast Foundation, Inc., et al., 18026

Federal Energy Regulatory Commission
NOTICES
Electric rate, small power production, and interlocking directorate filings, etc.:
Texas Utilities Electric Co. et al., 18018
Wisconsin Power & Light Co. et al., 18016
Natural gas certificate filings:
Texas Gas Transmission Co. et al., 18017
Applications, hearings, determinations, etc.:
Eastern Shore Natural Gas Co., 18019
Great Lakes Gas Transmission Co., 18019
Moraine Pipeline Co., 18019
Northwest Pipeline Corp., 18020
Questar Pipeline Co., 18021
Seagull Shoreline System, 18020
Tarpon Transmission Co., 18020

Federal Highway Administration
RULES
Engineering and traffic operations:
Truck size and weight—
Designated highway networks, 17952

Federal Reserve System
NOTICES
Meetings; Sunshine Act, 18054
Applications, hearings, determinations, etc.:
Amsterdam-Rotterdam Bank N.V., 18027

Fish and Wildlife Service
PROPOSED RULES
Endangered and threatened species:
White-necked crow, 18010
NOTICES
Endangered and threatened species permit applications, 18032

Food and Drug Administration
RULES
Animal drugs, feeds, and related products:
Tylosin, 17951
NOTICES
Animal drugs, feeds, and related products:
Vita Plus Corp.; approval withdrawn, 18030
Blood or blood products collection from high risk donors with positive tests for infectious disease markers; guideline availability, 18030
Food for human consumption:
Identity standard deviation; market testing permits—
Sour cream light, 18031
(2 documents)

Health and Human Services Department
See Centers for Disease Control; Food and Drug Administration; Public Health Service; Social Security Administration

Health Resources and Services Administration
See Public Health Service

Hearings and Appeals Office, Energy Department
NOTICES
Cases filed, 18024
Decisions and orders, 18021, 18023
(2 documents)

Interior Department
See Fish and Wildlife Service; Land Management Bureau; Minerals Management Service; National Park Service

International Trade Administration
NOTICES
Short supply determinations:
Manganese steel plate, 18011

Interstate Commerce Commission
PROPOSED RULES
Accounts, records, and reports:
ICC waybill sample public use file; expansion, 18009
NOTICES
Rail carriers:
Cost ratio for recyclables; determination, 18034
State intrastate rail rate authority—
Kansas, 18034
Waybill data; release for use, 18035
Railroad operation, acquisition, construction, etc.:
Bangor & Aroostook Railroad Co., 18036
Railroad services abandonment:
Providence & Worcester Railroad Co., 18035, 18036
(2 documents)

Justice Department
See Drug Enforcement Administration

Labor Department
See Employment and Training Administration

Land Management Bureau
NOTICES
Conservation and recreation areas:
California Desert Conservation Area Plan; correction, 18033
Withdrawal and reservation of lands:
Wyoming; correction, 18055

Management and Budget Office
NOTICES
Metropolitan Statistical Areas; definition standards for 1990; correction, 18055

Minerals Management Service
NOTICES
Organization, functions, and authority delegations:
Royalty management activities—
Texas, 18033

Minority Business Development Agency
NOTICES
Business development center program applications:
Arkansas, 18012

National Aeronautics and Space Administration
NOTICES
Meetings:
Advisory Council, 18038

National Archives and Records Administration
NOTICES
Agency records schedules; availability, 18039

National Foundation on the Arts and the Humanities
NOTICES
Meetings:
Arts in Education Advisory Panel, 18041
(2 documents)
Expansion Arts Advisory Panel, 18039, 18041
(2 documents)
Inter-Arts Advisory Panel, 18040
Museum Advisory Panel, 18040
(2 documents)
Visual Arts Advisory Panel, 18040

National Highway Traffic Safety Administration
RULES
Motor vehicle safety standards:
Seat belt assembly anchorages, 17970

National Institute for Occupational Safety and Health
See Centers for Disease Control

National Oceanic and Atmospheric Administration
NOTICES
Permits:
Marine mammals, 18012

National Park Service
NOTICES
Meetings:
Gates of Arctic National Park Subsistence Resource Commission, 18034

National Science Foundation
NOTICES
Meetings; Sunshine Act, 18054

Navy Department
NOTICES
Meetings:
Chief of Naval Operations Executive Panel Advisory Committee, 18014
Naval Research Advisory Committee, 18015

Nuclear Regulatory Commission
NOTICES
Reports, availability, etc.:
User's manual and IMPACTS-BRC Version 2.0 computer code, 18044
Applications, hearings, determinations, etc.:
Duquesne Light Co., 18041
Power Authority of State of New York, 18042

Office of Management and Budget
See Management and Budget Office

Public Health Service
See also Centers for Disease Control; Food and Drug Administration
NOTICES
Meetings:
President's Council on Physical Fitness and Sports, 18032

Research and Special Programs Administration
NOTICES
Hazardous materials:
Inconsistency rulings, etc.—
National Solid Wastes Management Association, 18046

Resolution Trust Corporation
NOTICES
Meetings; Sunshine Act, 18054

Securities and Exchange Commission
RULES
Securities:
Index arbitrage positions; liquidation, 17949
Restricted securities; resale, 17933

Social Security Administration
PROPOSED RULES
Social security benefits:
Death benefits spent on last illness and burial, 17999

State Department
NOTICES
Meetings:
Inter-American Tropical Tuna Commission, United States National Section Advisory Committee, 18044

Textile Agreements Implementation Committee
See Committee for the Implementation of Textile Agreements

Thrift Supervision Office
NOTICES
Conservator appointments:
Enterprise Federal Savings, F.S.A., 18052
First Savings & Loan Co., F.A., 18052
Texas Federal Savings Association, 18052
Receiver appointments:
Bedford Savings Association, 18052
Enterprise Federal Savings & Loan Assocation, 18052
First Federal Savings & Loan Association—
Hutchinson, 18053
First Savings & Loan Co., 18053
Texas Savings & Loan Association, 18053
Applications, hearings, determinations, etc.:
Laurel Federal Savings Bank, 18053
Pioneer Federal Savings Bank, 18053

Transportation Department
See also Coast Guard; Federal Aviation Administration; Federal Highway Administration; National Highway Traffic Safety Administration; Research and Special Programs Administration; Urban Mass Transportation Administration

PROPOSED RULES
Personnel, military:
Coast Guard Board for Correction of Military Records; procedural regulations, 18001
NOTICES
Aviation proceedings:
Hearings, etc.—
Japan charter allocation proceeding, 18045

Treasury Department
See also Alcohol, Tobacco and Firearms Bureau; Thrift Supervision Office
NOTICES
Agency information collection activities under OMB review, 18052
Organization, functions, and authority delegations:
Thrift Supervision Office, Director, 18052

Urban Mass Transportation Administration
NOTICES
Grants; UMTA sections 3 and 9 grant obligations, 18050

Separate Parts In This Issue

Part II
Department of Treasury, Alcohol, Tobacco and Firearms Bureau, 18058

Reader Aids
Additional information, including a list of public laws, telephone numbers, and finding aids, appears in the Reader Aids section at the end of this issue.

CFR PARTS AFFECTED IN THIS ISSUE

A cumulative list of the parts affected this month can be found in the Reader Aids section at the end of this issue.

14 CFR
39 (4 documents)..... 17927–17930
71..... 17931
73..... 17931

Proposed Rules:
Ch. I..... 17987
39 (9 documents)..... 17987, 17998

17 CFR
1..... 17932
200..... 17933
230..... 17933
241..... 17949

20 CFR

Proposed Rules:
416..... 17999

21 CFR
510..... 17951
558..... 17951

23 CFR
658..... 17952

27 CFR
4..... 17960
12..... 17960
19..... 18058
197..... 18058
250..... 18058
251..... 18058

33 CFR
100..... 17969
165..... 17969

Proposed Rules:
52..... 18001

40 CFR

Proposed Rules:
52..... 18005

47 CFR
73..... 17970

Proposed Rules:
61..... 18007
73..... 18009

49 CFR
571..... 17970

Proposed Rules:
1244..... 18009

50 CFR

Proposed Rules:
17..... 18010

Rules and Regulations

Federal Register
Vol. 55, No. 83
Monday, April 30, 1990

This section of the FEDERAL REGISTER contains regulatory documents having general applicability and legal effect, most of which are keyed to and codified in the Code of Federal Regulations, which is published under 50 titles pursuant to 44 U.S.C. 1510.
The Code of Federal Regulations is sold by the Superintendent of Documents. Prices of new books are listed in the first FEDERAL REGISTER issue of each week.

DEPARTMENT OF TRANSPORTATION

Federal Aviation Administration

14 CFR Part 39

[Docket No. 89-NM-264-AD; Amdt. 39-6587]

Airworthiness Directives; Boeing Model 747 Series Airplanes

AGENCY: Federal Aviation Administration (FAA), DOT.

ACTION: Final rule.

SUMMARY: This amendment adopts a new airworthiness directive (AD), applicable to certain Boeing Model 747 series airplanes, which requires inspection, and replacement of any defective rod-end bearings, if necessary, of the Number 3 left and right entry door emergency evacuation slide girt bar mechanism. This amendment is prompted by reports of failed rod-end bearings that are a part of the girt bar mechanism that locks the escape slide in place during deployment. This condition, if not corrected, could prevent the deployment of the escape slide, thus jeopardizing emergency evacuation of the airplane.

EFFECTIVE DATE: June 4, 1990.

ADDRESSES: The applicable service information may be obtained from Boeing Commercial Airplane Group, P.O. Box 3707, Seattle, Washington 98124. This information may be examined at the FAA, Northwest Mountain Region, Transport Airplane Directorate, 17900 Pacific Highway South, Seattle, Washington, or Seattle Aircraft Certification Office, 9010 East Marginal Way South, Seattle, Washington.

FOR FURTHER INFORMATION CONTACT: Mr. Pliny Brestel, Airframe Branch, ANM-120S; telephone (206) 431-1931. Mailing address: FAA, Northwest Mountain Region, 17900 Pacific Highway South, C-68966, Seattle, Washington 98168.

SUPPLEMENTARY INFORMATION: A proposal to amend part 39 of the Federal Aviation Regulations to include an airworthiness directive, applicable to Boeing 747 series airplanes, which requires inspection and replacement of defective rod-end bearings, if necessary, of the Number 3 left and right entry door emergency evacuation slide girt bar mechanism, was published in the **Federal Register** on January 19, 1990 (55 FR 1833).

Interested persons have been afforded an opportunity to participate in the making of this amendment. Due consideration has been given to the comments received.

The Air Transport Association (ATA) of America commented that none of its member operators had any objection to the proposed rule.

One commenter suggested that, because of the longevity of airplanes, the AD be revised to require periodic inspections to ensure proper operation of the Number 3 left and right entry door emergency evacuation slide girt bar mechanism. The FAA does not concur. Periodic inspections of the doors are already required as a part of the FAA-approved maintenance program. This rule is issued to require detection and replacement of specific parts which do not meet design specifications and many fail prematurely.

After careful review of the available data, including the comments noted above, the FAA has determined that air safety and the public interest require the adoption of the rule as proposed.

There are approximately 55 Model 747 series airplanes of the affected design in the worldwide fleet. It is estimated that 4 airplanes of U.S. registry will be affected by this AD, that it will take approximately 5 manhours per airplane to accomplish the required actions, and that the average labor cost will be $40 per manhour. Based on these figures, the total cost impact of this AD on U.S. operators is estimated to be $800.

Information collection requirements contained in this regulation have been approved by the Office of Management and Budget (OMB) under the provisions of the Paperwork Reduction Act of 1980 (Pub. L. 96-511) and have been assigned OMB Control Number 2120-0056.

The regulations adopted herein will not have substantial direct effects on the States, on the relationship between the national government and the States, or on the distribution of power and responsibilities among the various levels of government. Therefore, in accordance with Executive Order 12612, it is determined that this final rule does not have sufficient federalism implications to warrant the preparation of a Federalism Assessment.

For the reasons discussed above, I certify that this action (1) Is not a "major rule" under Executive Order 12291; (2) is not a "significant rule" under DOT Regulatory Policies and Procedures (44 FR 11034; February 26, 1979); and (3) will not have a significant economic impact, positive or negative, on a substantial number of small entities under the criteria of the Regulatory Flexibility Act. A final evaluation has been prepared for this action and is contained in the regulatory docket. A copy of it may be obtained from the Rules Docket.

List of Subjects in 14 CFR Part 39

Air transportation, Aircraft, Aviation safety, Safety.

Adoption of the Amendment

Accordingly, pursuant to the authority delegated to me by the Administrator, the Federal Aviation Administration amends 14 CFR part 39 of the Federal Aviation Regulations as follows:

PART 39—[AMENDED]

1. The authority citation for part 39 continues to read as follows:

Authority: 49 U.S.C. 1354(a), 1421 and 1423; 49 U.S.C. 106(g) (Revised Pub. L. 97-449, January 12, 1983); and 14 CFR 11.89.

§ 39.13 [Amended]

2. Section 39.13 is amended by adding the following new airworthiness directive:

Boeing: Applies to Model 747 series airplanes, identified in Boeing Alert Service Bulletin 747-52A2217, dated October 19, 1989, certificated in any category. Compliance required as indicated, unless previously accomplished.

To ensure proper operation of the Number 3 left and right entry door emergency evacuation slide, accomplish the following:

A. Within 90 days after the effective date of this AD, inspect the Number 3 left and right entry door girt bar mechanism, to determine if the rod-end bearings are defective. If any rod-end bearing is defective or has failed, prior to further flight, replace

the rod-end bearing with a serviceable part, in accordance with Boeing Alert Service Bulletin 747-52A2217, dated October 19, 1989.

B. Within 7 days after completion of the inspection required by paragraph A., above, report all failed and/or defective rod-end bearings detected during the inspection to the Manager, Seattle Manufacturing Inspection District Office, FAA, Transport Airplane Directorate, 7300 Perimeter Road South, Seattle, Washington, 98108.

C. An alternate means of compliance or adjustment of the compliance time, which provides an acceptable level of safety, may be used when approved by the Manager, Seattle Aircraft Certification Office, FAA, Northwest Mountain Region.

Note: The request should be forwarded through an FAA Principal Maintenance Inspector (PMI), who will either concur or comment, and then send it to the Manager, Seattle Aircraft Certification Office.

D. Special flight permits may be issued in accordance with FAR 21.197 and 21.199 to operate airplanes to a base in order to comply with the requirements of this AD.

All persons affected by this directive who have not already received the appropriate service documents from the manufacturer may obtain copies upon request to Boeing Commercial Airplane Group, P.O. Box 3707, Seattle, Washington 98124. These documents may be examined at the FAA, Northwest Mountain Region, Transport Airplane Directorate, 17900 Pacific Highway South, Seattle, Washington, or Seattle Aircraft Certification Office, 9010 East Marginal Way South, Seattle, Washington.

This amendment becomes effective June 4, 1990.

Issued in Seattle, Washington, on April 19, 1990.

Darrell M. Pederson,

Acting Manager, Transport Airplane Directorate, Aircraft Certification Service.

[FR Doc. 90-9926 Filed 4-27-90; 8:45 am]

BILLING CODE 4910-13-M

---

14 CFR Part 39

[Docket No. 89-NM-217-AD; Amdt. 39-6586]

Airworthiness Directives; Boeing Model 747 Series Airplanes

AGENCY: Federal Aviation Administration (FAA), DOT.

ACTION: Final rule.

SUMMARY: This amendment supersedes an existing airworthiness directive (AD), applicable to certain Boeing Model 747 series airplanes, which currently requires inspections to detect cracks in the front spar pressure bulkhead chord, and repair and modification, if necessary. This amendment would delete the existing modification requirement. This amendment is prompted by a determination that accomplishment of the modification may result in fuel leakage from the wing center section fuel tank. This condition, if not corrected could result in a potential fire hazard in the forward cargo compartment.

EFFECTIVE DATE: June 4, 1990.

ADDRESSES: The applicable service information may be obtained from Boeing Commercial Airplane Group, P.O. Box 3707, Seattle, Washington 98124. This information may be examined at the Federal Aviation Administration, Northwest Mountain Region, Transport Airplane Directorate, 17900 Pacific Highway South, Seattle, Washington, or Seattle Aircraft Certification Office, 9010 East Marginal Way South, Seattle, Washington.

FOR FURTHER INFORMATION CONTACT: Mr. Steven C. Fox, Airframe Branch, ANM-120S; telephone (206) 431-1923. Mailing address: FAA, Northwest Mountain Region, 17900 Pacific Highway South, C-68966, Seattle, Washington 98168.

SUPPLEMENTARY INFORMATION: A proposal to amend Part 39 of the Federal Aviation Regulations by superseding AD 84-18-06, Amendment 39-4912 (49 FR 35619; September 11, 1984), applicable to Boeing Model 747 series airplanes, which continues to require inspections to detect cracks in the front spar pressure bulkhead and repair, if necessary, but deletes the existing modification requirement, and was published in the **Federal Register** on January 22, 1990 (55 FR 2095).

Interested persons have been afforded an opportunity to participate in the making of this amendment. Due consideration has been given to the single comment received.

The commenter supported the rule.

After careful review of the available data, including the comment noted above, the FAA has determined that air safety and the public interest require the adoption of the rule as proposed.

The economic impact of this action remains unchanged from the existing AD. There are approximately 201 Boeing Model 747 series airplanes of the affected design in the worldwide fleet. It is estimated that 102 airplanes of U.S. registry will be affected by this AD, that it will take approximately 84 manhours per airplane to accomplish the required actions, and that the labor cost would be $40 per manhour. Based on these figures, the total cost impact of the AD on U.S. operators is estimated to be $342,720.

The regulations adopted herein will not have substantial direct effects on the States, on the relationship between the national government and the States, or on the distribution of power and responsibilities among the various levels of government. Therefore, in accordance with Executive Order 12612, it is determined that this final rule does not have sufficient federalism implications to warrant the preparation of a Federalism Assessment.

For the reasons discussed above, I certify that this action (1) is not a "major rule" under Executive Order 12291; (2) is not a "significant rule" under DOT Regulatory Policies and Procedures (44 FR 11034; February 26, 1979); and (3) will not have a significant economic impact, positive or negative, on a substantial number of small entities under the criteria of the Regulatory Flexibility Act. A final evaluation has been prepared for this action and is contained in the regulatory docket. A copy of it may be obtained from the Rules Docket.

List of Subjects in 14 CFR Part 39

Air transportation, Aircraft, Aviation safety, Safety.

Adoption of the Amendment

Accordingly, pursuant to the authority delegated to me by the Administrator, the Federal Aviation Administration amends 14 CFR Part 39 of the Federal Aviation Regulations as follows:

PART 39—[AMENDED]

1. The authority citation for part 39 continues to read as follows:

Authority: 49 U.S.C. 1354(a), 1421 and 1423; 49 U.S.C. 106(g) (Revised Pub. L. 97-449, January 12, 1983); and 14 CFR 11.89.

§ 39.13 [Amended]

2. Section 39.12 is amended by superseding AD 84-18-06, Amendment 39-4912 (49 FR 35619; September 11, 1984), with the following new airworthiness directive:

Boeing: Applies to Model 747 series airplanes, listed in Boeing Service Bulletin 747-53-2064, Revision 4, dated September 23, 1983, certificated in any category. Compliance is required as indicated, unless previously accomplished.

To detect cracks in the front spar pressure bulkhead chord, accomplish the following:

A. For airplanes that have not been modified in accordance with Boeing Service Bulletin 747-53-2064, dated July 25, 1972: Within the next 1,000 landings after October 15, 1984 (the effective date of AD 84-18-06, Amendment 39-4912), or prior to the accumulation of 10,000 landings, whichever occurs later, and thereafter at intervals not to exceed 7,000 landings, conduct a high

frequency eddy current (HFEC) inspection of the chord to detect cracks between stringers S-37 and S-39 at the chord radius, heel, and flanges adjacent to the fastener holes identified for inspection in Boeing Service Bulletin 747-53-2064, Revision 4, dated September 23, 1983. If cracks are found in the pressure bulkhead chord, accomplish the repair in accordance with the service bulletin before further flight. Repair of cracks along the chord radius under 5 inches in length, or across a chord flange that have not severed the chord flange, may be deferred 1,000 landings by stop drilling and reinspecting for crack progression every 200 landings using HFEC. If crack progression is found, repair in accordance with the service bulletin prior to further flight. Inspections are to continue at intervals not to exceed 7,000 landings after repair.

B. For airplanes that have been modified in accordance with Boeing Service Bulletin 747-53-2064, dated July 25, 1972: Within the next 1,000 landings after October 15, 1984 (the effective date of AD 84-18-06, Amendment 39-4912), or prior to the accumulation of 10,000 landings after the modification, whichever is later, and thereafter at intervals not to exceed 10,000 landings, conduct an HFEC inspection to detect cracks in the front spar pressure bulkhead lower chord heel from stringers S-37 and S-39, and conduct an ultrasonic inspection to detect cracks in the fuselage skin originating at the indicated fastener holes beneath the forward drag splice fitting flanges, in accordance with the service bulletin. If any cracks are found, repair in accordance with Boeing Service Bulletin 747-53-2064, Revision 4, dated September 23, 1983, before further flight. Inspections are to continue at intervals not to exceed 10,000 landings after repair.

C. An alternate means of compliance or adjustment of the compliance time, which provides an acceptable level of safety, may be used when approved by the Manager, Seattle Aircraft Certification Office, FAA, Northwest Mountain Region.

Note: The request should be forwarded through an FAA Principal Maintenance Inspector (PMI), who will either concur or comment, and then send it to the Manager, Seattle Aircraft Certification Office.

D. For the purposes of complying with this AD, subject to acceptance by the assigned FAA Maintenance Inspector, the number of landings may be determined by dividing each airplane's number of hours time in service by the operator's fleet average time from takeoff to landing for the airplane type.

E. Special flight permits may be issued in accordance with FAR 21.197 and 21.199 to operate airplanes to a base in order to comply with the requirements of this AD.

All persons affected by this directive who have not already received the appropriate service documents from the manufacturer may obtain copies upon request to Boeing Commercial Airplanes, P.O. Box 3707, Seattle, Washington 98124. These documents may be examined at the FAA, Northwest Mountain Region, Transport Airplane Directorate, 17900 Pacific Highway South, Seattle, Washington, or Seattle Aircraft Certification Office, 9010 East Marginal Way South, Seattle, Washington.

This amendment supersedes Amendment 39-4912, AD 84-18-06.

This amendment becomes effective June 4, 1990.

Issued in Seattle, Washington, on April 19, 1990.

Darrell M. Pederson,

Acting Manager, Transport Airplane Directorate, Aircraft Certification Service.

[FR Doc. 90-9942 Filed 4-27-90; 8:45 am]

BILLING CODE 4910-13-M

---

14 CFR Part 39

[Docket No. 90-NM-05-AD; Amdt. 39-6588]

Airworthiness Directives; Boeing Model 737-300 and -400 Series Airplanes

AGENCY: Federal Aviation Administration (FAA), DOT.

ACTION: Final rule.

SUMMARY: This amendment adopts a new airworthiness directive (AD), applicable to certain Boeing Model 737-300 and -400 series airplanes, which requires modification of certain evacuation slides to ensure automatic inflation upon deployment. This amendment is prompted by reports of evacuation slides that fail to automatically inflate when tested. This condition, if not corrected, could delay the emergency evacuation of passengers while slide inflation is manually initiated, or, result in injury to passengers who inadvertently utilize an exit whose slide has not automatically inflated.

EFFECTIVE DATE: June 4, 1990.

ADDRESSES: The applicable service information may be obtained from Air Cruisers Company, P.O. Box 180, Belmar, New Jersey 07719-0180. This information may be examined at the FAA, Northwest Mountain Region, Transport Airplane Directorate, 17900 Pacific Highway South, Seattle, Washington, or Seattle Aircraft Certification Office, 9010 East Marginal Way South, Seattle, Washington.

FOR FURTHER INFORMATION CONTACT: Mr. Terrell W. Rees, Airframe Branch, ANM-120S; telephone (206) 431-1941. Mailing address: FAA, Northwest Mountain Region, 17900 Pacific Highway South, C-68966, Seattle, Washington 98168.

SUPPLEMENTARY INFORMATION: A proposal to amend part 39 of the Federal Aviation Regulations to include an airworthiness directive, applicable to Boeing Model 737-300 and -400 series airplanes, which requires modification of certain evacuation slides, was published in the **Federal Register** on February 8, 1990 (55 FR 4433).

Interested persons have been afforded an opportunity to participate in the making of this amendment. Due consideration has been given to the single comment received.

The commenter supported the proposal.

After careful review of the available data, including the comment noted above, the FAA has determined that air safety and the public interest require the adoption of the rule as proposed.

There are approximately 800 Model 737-300 and -400 series airplanes of the affected design in the worldwide fleet. It is estimated that 379 airplanes of U.S. registry will be affected by this AD, that it will take approximately 8 manhours per airplane to accomplish the required actions, and that the average labor cost will be $40 per manhour. Modification kits are offered by Air Cruisers at no charge. Based on these figures, the total cost impact of the AD on U.S. operators is estimated to be $121,280.

The regulations adopted herein will not have substantial direct effects on the States, on the relationship between the national government and the States, or on the distribution of power and responsibilities among the various levels of government. Therefore, in accordance with Executive Order 12612, it is determined that this final rule does not have sufficient federalism implications to warrant the preparation of a Federalism Assessment.

For the reasons discussed above, I certify that this action (1) is not a "major rule" under Executive Order 12291; (2) is not a "significant rule" under DOT Regulatory Policies and Procedures (44 FR 11034; February 26, 1979); and (3) will not have a significant economic impact, positive or negative, on a substantial number of small entities under the criteria of the Regulatory Flexibility Act. A final evaluation has been prepared for this action and is contained in the regulatory docket. A copy of it may be obtained from the Rules Docket.

List of Subjects in 14 CFR Part 39

Air transportation, Aircraft, Aviation safety, Safety.

Adoption of the Amendment

Accordingly, pursuant to the authority delegated to me by the Administrator, the Federal Aviation Administration amends 14 CFR Part 39 of the Federal Aviation Regulations as follows:

PART 39—[AMENDED]

1. The authority citation for part 39 continues to read as follows:

Authority: 49 U.S.C. 1354(a), 1421 and 1423; 49 U.S.C. 106(g) (Revised Pub. L. 97–449, January 12, 1983); and 14 CFR 11.89.

§ 39.13 [Amended]

2. Section 39.13 is amended by adding the following new airworthiness directive:

Boeing: Applies to Model 737–300 and –400 series airplanes, equipped with Air Cruisers Company forward door evacuation slides identified in paragraph 1A of Air Cruisers Service Bulletin 103–25–17, dated November 10, 1989, certificated in any category. Compliance required within 3 years after the effective date of this AD, unless previously accomplished.

To assure that forward door evacuation slides will automatically inflate when needed, accomplish the following:

A. Modify affected slides by installing a frangible link in accordance with Air Cruisers Service Bulletin 103–25–17, dated November 10, 1989.

B. An alternate means of compliance or adjustment of the compliance time, which provides an acceptable level of safety, may be used when approved by the Manager, Seattle Aircraft Certification Office, FAA, Northwest Mountain Region.

Note: The request should be forwarded through an FAA Principal Maintenance Inspector (PMI), who will either concur or comment, and then send it to the Manager, Seattle Aircraft Certification Office.

C. Special flight permits may be issued in accordance with FAR 21.197 and 21.199 to operate airplanes to a base in order to comply with the requirements of this AD.

All persons affected by this directive who have not already received the appropriate service documents from the manufacturer may obtain copies upon request to Air Cruisers Company, P.O. Box 180, Belmar, New Jersey, 07719–0180. These documents may be examined at the FAA, Northwest Mountain Region, Transport Airplane Directorate, 17900 Pacific Highway South, Seattle, Washington, or Seattle Aircraft Certification Office, 9010 East Marginal Way South, Seattle, Washington.

This amendment becomes effective June 4, 1990.

Issued in Seattle, Washington, on April 19, 1990.

Darrell M. Pederson,

Acting Manager, Transport Airplane Directorate, Aircraft Certification Service.

[FR Doc. 90–9943 Filed 4–27–90; 8:45 am]

BILLING CODE 4910–13–M

14 CFR Part 39

[Docket No. 89–ANE–38; Amdt. 39–6565]

Airworthiness Directives; All Aircraft Using Texas Instruments Circuit Breaker Models 6TC6–7.5 and –10 and 6TC20–7.5 and –10, All With Date Codes 8150 and Earlier

AGENCY: Federal Aviation Administration (FAA), DOT.

ACTION: Final rule.

SUMMARY: This amendment adopts a new airworthiness directive (AD) which requires the replacement of certain Texas Instruments circuit breakers installed on all such equipped aircraft. This AD is needed to prevent potential overheating of certain circuit breaker models which could result in a fire aboard the aircraft.

DATES: *Effective Date:* May 30, 1990.

Compliance: Required no later than November 1, 1990, unless already accomplished.

ADDRESSES: The referenced service bulletins may be obtained from Boeing Commercial Airplanes, Mr. R.G. Kelsey, Manager, Service Bulletin Engineering, Mail Stop 2L–02, P.O. Box 3707, Seattle, Washington 98124; Lockheed Corporation, Commercial Order Administration, Department 65–33, U–20, A–1, P.O. Box 551, Burbank, California 91520; or may be examined in the Regional Rules Docket, room 311, Office of the Assistant Chief Counsel, Federal Aviation Administration, New England Region, 12 New England Executive Park, Burlington, Massachusetts 01803.

FOR FURTHER INFORMATION CONTACT: Mr. Ted Ebina, Boston Aircraft Certification Office, ANE–153, Engine and Propeller Directorate, Aircraft Certification Service, Federal Aviation Administration, 12 New England Executive Park, Burlington, Massachusetts 01803; telephone (617) 273–7012.

SUPPLEMENTARY INFORMATION: A proposal to amend part 39 of the Federal Aviation Regulations (FAR) to include an AD requiring the replacement, as necessary, of certain Texas Instruments circuit breakers was published in the **Federal Register** on October 26, 1989 (54 FR 43591). The proposal was prompted by fires caused by overheated circuit breakers. The overheating was attributed to increased contact resistance.

Interested persons have been afforded an opportunity to participate in the making of this amendment. Eleven commenters, representing the views of an association of U.S. airlines, and manufacturers, responded to the notice of proposed rulemaking (NPRM). The comments favor the intent of the proposed rule. Due consideration has been given to all the comments received.

One commenter indicated that it would not be substantially affected by the AD and agreed with its requirements.

One commenter stated that references to Boeing and Lockheed should be minimized in the AD to place more emphasis on the general applicability of this amendment. The FAA agrees with the commenter and some references to the airframe manufacturers have been removed from this AD.

One commenter proposed that the AD indicate the circuit breakers are three-phase protective devices. The phrase "three-phase" or "single-phase" has no significance on troubleshooting the affected aircraft. The FAA believes that the circuit breaker part numbers alone are sufficient to identify the defective circuit breakers. Accordingly, the phrase is not included in the AD.

Two commenters proposed that since overheating in the circuit breakers is limited to inductive loads only, the AD mandate the circuit breaker replacement only in this type of application. Two other commenters stated that the overheating problem in the circuit breakers can exist in resistive loads as well as in inductive loads and proposed that the AD address these applications. The FAA disagrees with the proposed loads identification because the circuit breakers used in all loads can cause an unsafe condition. Another commenter proposed that in addition to identifying the loads that are considered a hazard, the AD specify the magnitude of current in which degradation could expect to occur in the circuit breakers. The FAA disagreed with the proposed specification of the current magnitude. There is evidence that various degrees of current flowing in circuits protected by the affected circuit breakers can cause overheating in the protective devices. Accordingly, no references to the load types or the current magnitude are present in the AD.

Eight commenters proposed that the AD compliance period be longer than 30 days because an adequate supply of the circuit breakers may not be available or the quantity to be inspected may be in excess of 4,000 circuit breakers. The FAA has reconsidered the proposed compliance time in view of the comments received concerning the time required for operators to inspect and possibly replace the circuit breakers. Upon consideration of all the information presently available, the

FAA has determined that additional time is necessary for operators to comply with this amendment, and has increased the compliance time.

One commenter stated that the corrected circuit breakers were reidentified with new part numbers. Also, a different circuit breaker supplier was authorized. The FAA has no objection to the new identification or to the use of a different supplier. However, this information does not necessitate a change to this AD.

The last date code (DC) of the affected circuit breakers was inadvertently identified in the NPRM as 8151, instead of 8150. After issuing the NPRM, the FAA discovered this discrepancy. The correct DC will be reflected in the AD.

One commenter proposed limiting the possible defective circuit breakers to those devices having DC's of 7801 to 8150, inclusive. The FAA does not agree with the proposed initial effective DC of 7801. This commenter does not have a circuit breaker date coded earlier than 7801. Since the overheating condition is likely to exist on the pre-DC 7801 circuit breakers, the AD will state the effectivity to all circuit breakers with DC's 8150 and earlier.

Accordingly, the proposal is adopted as proposed with the above-mentioned changes.

The regulations adopted herein do not have substantial direct effects on the states, on the relationship between the national government and the states, or on the distribution of power and responsibilities among the various levels of government. Therefore, in accordance with Executive Order 12612, it is determined that this final rule will not have sufficient federalism implications to warrant the preparation of a Federalism Assessment.

The FAA has determined that this regulation involves approximately 4,000 circuit breakers, and the approximate cost for each circuit breaker replacement including labor, will be about $350.00 or less. Based on these figures, the total cost is estimated to be $1,400,000. Therefore, I certify that this action (1) Is not a "major rule" under Executive Order 12291; (2) is not a "significant rule" under DOT Regulatory Policies and Procedures (44 FR 11034; February 26, 1979); (3) does not warrant preparation of a regulatory evaluation as the anticipated impact is so minimal; and (4) if promulgated, will not have a significant economic impact, positive or negative, on a substantial number of small entities under the criteria of the Regulatory Flexibility Act.

List of Subjects in 14 CFR Part 39

Air transportation, Aircraft, Aviation safety, and Safety.

Adoption of the Amendment

Accordingly, pursuant to the authority delegated to me by the Administrator, the Federal Aviation Administration (FAA) amends 14 CFR part 39 of the Federal Aviation Regulations (FAR) as follows:

PART 39—[AMENDED]

1. The authority citation for part 39 continues to read as follows:

Authority: 49 U.S.C. 1354(a), 1421 and 1423; 49 U.S.C. 106(g) (Revised Pub. L. 97–449, January 12, 1983); and 14 CFR 11.89.

§ 39.13 [Amended]

2. Section 39.13 is amended by adding the following new airworthiness directive (AD):

Texas Instruments: Applies to circuit breaker Models 6TC6–7.5 and –10 and 6TC20–7.5 and –10, all with date codes 8150 and earlier.

Compliance is required no later than November 1, 1990, unless already accomplished.

(a) To prevent potential overheating of the applicable circuit breakers, replace Texas Instruments circuit breaker Models 6TC6–7.5 and –10 and Models 6TC20–7.5 and –10, all with date codes 8150 and earlier. These circuit breakers may be replaced with the same model numbers with the manufacturing date codes of 8151 and later.

Note: The circuit breakers are installed in, but not limited to, aircraft manufactured by Boeing Commerical Airplanes and Lockheed Corporation. Service bulletins published to date, which may be helpful in identifying replacement circuit breakers, are as follows:

(1) The Boeing Commercial Airplanes' service bulletins 757–24–0054, 747–24–2135, and 767–24–0060, all dated August 31, 1989. Their part numbers BACC18AC7 and BACC18AC10 are used to identify Texas Instruments Model 6TC6.–7.5 and 6TC6–10, respectively.

(2) The Lockheed Corporation service bulletin 093–24–134, dated August 12, 1987. Their part numbers LS10159–7 and LS10159–10 are used to identify Texas Instruments Model 6TC20–7.5 and 6TC20–10, respectively.

(b) Upon submission of substantiating data by an owner or operator through an FAA Airworthiness Inspector, an alternate method of compliance with the requirements of this AD or adjustments to the compliance times specified in this AD may be approved by the Manager, Boston Aircraft Certification Office, Engine and Propeller Directorate, Aircraft Certification Service, Federal Aviation Administration, 12 New England Executive Park, Burlington, Massachusetts 01803.

This amendment become effective on May 30, 1990.

Issued in Burlington, Massachusetts, on April 20, 1990.

Arthur J. Pidgeon,

Assistant Manager, Engine and Propeller Directorate, Aircraft Certification Service.

[FR Doc. 90–9944 Filed 4–27–90; 8:45 am]

BILLING CODE 4910–13–M

---

14 CFR Parts 71 and 73

[Airspace Docket No. 85–ASO–16]

Revocation, Realignment and Establishment of Restricted Areas, NC; Correction

AGENCY: Federal Aviation Administration (FAA), DOT.

ACTION: Final rule; correction.

SUMMARY: This action corrects an error in the airspace description of Restricted Area R–5313D Long Shoal Point, NC. The coordinates "lat. 35°20′52″N., long. 76°43′09″W." should have been "lat. 35°20′52″N., long. 75°43′09″W." This action corrects that error.

EFFECTIVE DATES: 0901 u.t.c., May 3, 1990.

FOR FURTHER INFORMATION CONTACT: Itchy Sell, Military Operations Programs (ATM–420), Office of Air Traffic System Management, Federal Aviation Administration, 800 Independence Avenue, SW., Washington, DC 20591; telephone: (202) 267–7685.

SUPPLEMENTARY INFORMATION:

History

Federal Register Document 90–7296, published on March 30, 1990, alters and redesigns Restricted Areas R–5301, R–5302, and R–5313 in eastern North Carolina (55 FR 11897). Due to an administrative error, the airspace description of R–5313D incorrectly began at lat. 35°20′52″N., long. 76°43′09″W. The boundary should begin at lat. 35°20′52″N., long. 75°43′09″W. No additional airspace is added by this correction. This action corrects the aforementioned error.

List of Subjects in 14 CFR Parts 71 and 73

Aviation safety, Continental control area, Restricted areas.

Correction to Final Rule

Accordingly, pursuant to the authority delegated to me, FR Document 90–7296, as published in the **Federal Register** on March 30, 1990, (55 FR 11897) is corrected as follows:

§ 73.53 [Corrected]

R-5313D Long Shoal Point, NC [Corrected]

After the word "Boundaries." (page 11901, column 1), remove the words "Beginning at lat. 35°20'52"N., long. 76°43'09"W.;" and substitute the words "Beginning at lat. 35°20'52"N., long. 75°43'09"W."

Issued in Washington, DC, on April 20, 1990.

Harold W. Becker,

Manager, Airspace, Rules and Aeronautical Information Division.

[FR Doc. 90-9924 Filed 4-27-90; 8:45 am]

BILLING CODE 4910-13-M

COMMODITY FUTURES TRADING COMMISSION

17 CFR Part 1

Self-Regulatory Organization Automated Systems

AGENCY: Commodity Futures Trading Commission.

ACTION: Interpretative rule.

SUMMARY: The Commodity Futures Trading Commission is issuing this interpretation to make clear that the record retention requirements in its regulations apply to any records created by or for a self-regulatory organization to document the development, implementation, or maintenance of any automated systems supporting or incident to the performance of its self-regulatory responsibilities and functions.

FOR FURTHER INFORMATION CONTACT: Linda Kurjan, Special Counsel, Division of Trading and Markets, Commodity Futures Trading Commission, 2033 K Street NW., Washington, DC 20581, telephone: (202) 254-8955.

SUPPLEMENTARY INFORMATION: During recent years self-regulatory organizations ("SRO") have developed automated systems to perform, or enhance their ability to perform, their functions and responsibilities.[1] Such initiatives include electronic trading systems,[2] electronic order routing systems,[3] hand-held trade entry terminals,[4] trade-checking and clearing systems, and automated surveillance programs. While many of these initiatives are still in the developmental stages, others are established systems to which enhancements are ongoing.

The development, implementation, and maintenance of an automated system typically are accompanied by extensive documentation. This documentation, which includes but is not limited to traditional systems development documentation, creates a historical record of those processes.[5] It records the steps taken to identify vulnerabilities in the system, to establish safeguards that address such vulnerabilities, and otherwise to ensure the system's technical accuracy, reliability, and ability to operate as intended. The information contained in such documentation may relate to such aspects as the physical environment of the system, the system's capacity, the operating system software, data integrity, access controls, user guidance, systems testing, internal controls, and contingency plans, among other things.

From an SRO's perspective, these materials, whether in computer media or hardcopy form, create a historical record of the decisions that were made regarding the requirements and design of the system and provide a basis for operational decisions, assessments, and enhancements. Separately, the availability of documentation to the Commission improves the capability of the agency to ascertain the SRO's compliance with requirements of the Commodity Exchange Act ("Act") and the regulations and to provide proper oversight of the system.[6]

Access to documentation assists the Commission in identifying vulnerabilities that could adversely affect the SRO's ability to perform its responsibilities and in assessing a system's technical accuracy, reliability, and ability to operate as intended. For example, evaluation of documentation can indicate whether an SRO provides adequate safeguards to protect the computer system or process against such dangers as unauthorized access, internal failures, human errors, attacks and natural catastrophes that might cause improper disclosure, modification, destruction or denial of service. The documentation also could permit the Commission to use or run programs directly on SRO systems to test the quality of outputs of the system or other features.

Accordingly, the Commission is issuing this interpretation to make clear that, under existing requirements of the Act and Commission regulations, including Regulation 1.51 and sections 17p and q of the Act, documentation, as described above, must be retained for certain automated systems. Specifically, for any automated system that supports or is incident to an SRO's activities or responsibilities as a self-regulatory organization, such documentation must be retained by the SRO for five years, pursuant to Regulation 1.31.[7] By contrast, documentation relating to systems supporting an SRO's administrative functions as a business organization or employer, *e.g.*, an automated payroll system, would not constitute "records" under that regulation.

Specifically, Commission Regulation 1.51(b) requires contract markets to keep full, complete and systematic records

[1] For purposes of this interpretation, the term "self-regulatory organization" is used as defined in Commission Regulation 1.3(ee) and also includes a "clearing organization" as defined in Commission Regulation 1.3(d).

[2] *E.g.*, Chicago Mercantile Exchange ("CME") Globex System; Chicago Board of Trade ("CBOT") Aurora System; and Amex Commodities Corporation ("ACC") Amex Access System.

[3] *E.g.*, CBOT Electronic Order System ("EOS"); CME Trade Order Processing System ("TOPS").

[4] *E.g.*, Automated Data Input Terminal ("AUDIT") to be developed jointly by CBOT and CME; the Commodity Exchange, Inc. project to develop hand-held terminals.

[5] Traditional systems development documentation would include items such as requirements analyses, systems design documents, program specifications, system test plans, training materials, user manuals, and operations manuals.

[6] The Commission has become increasingly active in monitoring technical aspects of contract market automated systems. For example, Commission staff have met separately on several occasions with CME staff and with CBOT staff to view demonstrations of Globex and Aurora and to discuss such matters as security features, capacity planning, performance characteristics, and backup and recovery procedures. In addition, Commission staff have examined plans and procedures for testing the Globex and ACC systems and have visited the site of the central computer for each of them to investigate the physical and logical security measures undertaken to protect the system. Additional oversight activities currently are underway with regard to each of these contract market systems.

The Commission has been an active participant in efforts to analyze issues regarding the use of new technologies and systems. For example, Commission staff have met with staff from both the National Institute of Standards and Technology and the Office of Management and Budget on several occasions to discuss security issues with respect to automated trading systems. In addition, Commission staff participated in a conference of regulators, developers and users of automated, screen-based trading systems. Furthermore, the Commission is chairing a working group within an international organization of financial-related regulators that is charged with studying, among other things, issues surrounding screen-based futures trading.

[7] This interpretation in no way limits or affects existing requirements for the creation and retention of specific records by SRO's such as those set forth in Commission Regulation 1.35 regarding trading records, among other provisions.

that will clearly set forth all action taken as part of programs to ensure enforcement of contract market rules under section 5a(8) of the Act and Regulation 1.53 and to secure compliance with sections 5 and 5a of the Act, among others. Similarly, each registered futures association is required to develop comprehensive programs under sections 17p and q of the Act to implement and enforce compliance of rules approved by the Commission. Records must be retained for a period of five years and be available for Commission inspection in accordance with Regulation 1.31.

Furthermore, this responsibility rests with each SRO regardless of whether the documentation is in its physical possession or in that of a third party, such as an independent contractor or a vendor. The SRO must ensure access by Commission staff to the documentation if it is to demonstrate compliance with its self-regulatory obligations. The Commission will continue to review such documentation in monitoring the development, implementation and maintenance of particular SRO automated systems and in reviewing related compliance programs.

This interpretation is intended to clarify the requirement that documentation, as described above, relating to automated systems development, implementation, or maintenance that is created by or for the SRO must be retained and available for Commission inspection. The Commission intends to address the issue of what constitutes adequate documentation (that is, what types of documentation should be generated) in the course of subsequent oversight and regulatory activities. In that connection, and regarding regulation of SRO automated systems generally, the Commission is creating a task force to draw upon the experience and technical expertise of other Federal agencies. The Commission also plans to initiate further rulemaking and interpretive actions to articulate with greater specificity its regulatory interest in overseeing automated systems and the obligations of the self-regulatory organizations and other regulated market participants with respect to the creation, maintenance, operation and supervision of such systems.

Issued in Washington, DC, on the 24th day of April 1990.

Jean A. Webb,

Secretary of the Commission.

[FR Doc. 90-9863 Filed 4-27-90; 8:45 am]

BILLING CODE 6351-01-M

SECURITIES AND EXCHANGE COMMISSION

17 CFR Parts 200 and 230

[Release No. 33-6862; 34-27928; IC-17452; File No. S7-23-88 Int, Series—121]

RIN 3235-AC65

Resale of Restricted Securities; Changes to Method of Determining Holding Period of Restricted Securities Under Rules 144 and 145

AGENCY: Securities and Exchange Commission.

ACTION: Final rule, rule amendments and solicitation of comments.

SUMMARY: The Commission is adopting Rule 144A, which provides a safe harbor exemption from the registration requirements of the Securities Act of 1933 for resales of restricted securities to "qualified institutional buyers" as defined in the Rule. The Commission additionally is soliciting further public comment on the definition of qualified institutional buyer as it applies to banks and savings and loan institutions under the Rule as adopted today.

The Commission also is adopting amendments to Rules 144 and 145 under the Securities Act, which redefine the required holding period for restricted securities, whether acquired pursuant to Rule 144A or otherwise.

DATES: *Effective Date:* April 30, 1990.

Comment Date: Comment letters on the definition of qualified institutional buyer, as it applies to banks and savings and loan institutions should be received on or before June 14, 1990.

ADDRESSES: Comments should be submitted in triplicate to Jonathan G. Katz, Secretary, Securities and Exchange Commission, 450 Fifth Street NW., Washington, DC 20549. Comments should refer to File No. S7-23-88. All comments received will be available for public inspection and copying in the Commission's Public Reference Room at the same address.

FOR FURTHER INFORMATION CONTACT: Brent H. Taylor (202) 272-3246, or Michael Hyatte at (202) 272-2573, Division of Corporation Finance, Securities and Exchange Commission, 450 Fifth Street NW., Washington, DC 20549.

I. Executive Summary

On October 25, 1988, the Commission proposed Rule 144A (the "Rule") to provide a non-exclusive safe harbor exemption from the registration requirements of the Securities Act of 1933 (the "Securities Act") [1] for specified resales of restricted securities to institutional investors.[2] As originally proposed, the Rule would have provided a safe harbor for three tiers of transactions. The first tier would have exempted only resales of restricted securities to "qualified institutional buyers," defined in the initial proposal as those with assets in excess of $100 million, while the other two tiers would have provided an exemption for resales to a broader group of institutional investors. A number of commenters urged the Commission to proceed cautiously by adopting the Rule in stages. Most of the commenters suggesting a staged phase-in of the Rule favored proceeding initially with a rule that was available only to large institutional buyers. Several commenters suggested that a definition of "qualified institutional buyer" linked to securities investments would provide a better test of an institution's investment sophistication than the proposed total assets test.

On July 11, 1989, the Commission reproposed a revised Rule 144A that would have established a single class of exempt transactions based on the "qualified institutional buyer" tier of the original proposal.[3] Specifically, the revised proposal would have defined "qualified institutional buyer" to be an institution, acting for its own account, that had assets invested in securities purchased for a total of more than $100 million. The Commission noted that a definition focused on assets invested in securities should target, with more precision than the asset test originally proposed, sophisticated institutions with experience in investing in securities.

The Commission today is adopting Rule 144A. New Rule 144A provides a non-exclusive safe harbor exemption from the registration requirements of the Securities Act for resales to eligible institutions of any restricted securities that, when issued, were not of the same class as securities listed on a U.S. securities exchange or quoted in the National Association of Securities Dealers Automated Quotation system ("NASDAQ"). With the exception of

[1] 15 U.S.C. 77a *et seq.*

[2] Securities Act Release No. 6806 (October 25, 1988) [53 FR 44016]. Eighty-nine comment letters were received. These letters and a summary of such letters are available for public inspection and copying at the Commission's Public Reference Room in Washington, DC (File No. S7-23-88).

[3] Securities Act Release No. 6839 (July 11, 1989) [54 FR 30076]. Fifty-four comment letters were received. These letters and a summary of such letters are available for public inspection and copying at the Commission's Public Reference Room in Washington, DC (File No. S7-23-88).

registered broker-dealers, a qualified institutional buyer must in the aggregate own and invest on a discretionary basis at least $100 million in securities of issuers that are not affiliated with that qualified institutional buyer.

The Rule as adopted provides for an eligibility threshold of $10 million in securities for broker-dealers that are registered under the Securities Exchange Act of 1934 (the "Exchange Act"),[4] irrespective of whether they are buying for purposes of intermediation or investment. In addition, to facilitate intermediation in this market, the Rule provides that a registered broker-dealer may purchase as riskless principal, as defined in the Rule, for an institution that is itself eligible to purchase under the Rule, or act as agent on a non-discretionary basis in a sale to such an institution.

In addition to meeting the $100 million in securities requirement, banks and savings and loan associations must have a net worth of at least $25 million to be qualified institutional buyers. Because of the unique status of such financial institutions as federally-insured depository institutions, the Commission is of the opinion that such an eligibility test is warranted. To avoid placing U.S. banks at a competitive disadvantage, the net worth test applies to both foreign and domestic banks. The Commission is soliciting further comment on the appropriateness of the net worth test for banks and savings and loan institutions, as well as on the appropriateness of the $25 million level.

Registered broker-dealer affiliates of banks and savings and loan associations, which are subject to direct Commission oversight, would, however, be able to purchase under the Rule on the same terms as other registered broker-dealers. Such registered broker-dealer affiliates would not be required to meet the net worth test.

Where the issuer of the securities to be resold is neither a reporting company under the Exchange Act, nor exempt from reporting pursuant to Rule 12g3-2(b) under the Exchange Act,[5] nor a foreign government eligible to use Schedule B under the Securities Act,[6] availability of the Rule is conditioned on the holder of the security, and a prospective purchaser from the holder, having the right to obtain from the issuer specified limited information about the issuer, and on the purchaser having received such information from the issuer, the seller, or a person acting on either of their behalf, upon request.

[4] 15 U.S.C. 78a *et seq.*

[5] 17 CFR 240.12g3-2(b).

[6] 15 U.S.C. 77aa.

Although the Rule imposes no resale restrictions, a seller or any person acting on its behalf must take reasonable steps to ensure that the buyer is aware that the seller may rely on the exemption from the Securities Act's registration requirements afforded by Rule 144A.

The Commission also is adopting amendments to Rules 144 and 145 under the Securities Act.[7] Rule 144 permits the public resale of restricted securities when certain conditions, including a minimum holding period, are met. Under the amendments, the time that must elapse before public resale of restricted securities (whether acquired in reliance on Rule 144A or otherwise) is being redefined to commence when the securities are sold by the issuer or its affiliate. In contrast to the reproposal, the amendments apply to the securities of foreign as well as domestic issuers. Because Rule 145 holding periods are determined by reference to Rule 144, Rule 145 is being amended to reflect the changes to Rule 144.

II. New Rule 144A

As discussed above, the Rule originally was proposed to apply to a broad range of institutions and securities. In response to numerous comments received on the possible effects of the Rule, the scope of the reproposed Rule was narrowed to a modified version of the "qualified institutional buyer" first tier of the original proposal. Many of those commenters favoring an initially limited form of the Rule nonetheless stated that the Commission should either "phase-in" the various tiers of the Rule as originally proposed, or that it should closely monitor the impact of the Rule, with a view to expanding the Rule's scope as appropriate.

The Commission views Rule 144A as adopted today as the first step toward achieving a more liquid and efficient institutional resale market for unregistered securities. The Commission intends to monitor the evolution of this market and to revisit the Rule with a view to making any appropriate changes. Among the issues that the Commission would expect to consider would be the nature and number of regular participants in the market, the types of securities traded, the liquidity of the market, the extent of foreign issuer participation in the private market, the effect of the Rule 144A market on the public market, and any perceived abuses of the safe harbor.

[7] 17 CFR 230.144 and 145.

A. General

Rule 144A sets forth a non-exclusive safe harbor from the registration requirements of section 5 of the Securities Act [8] for the resale of restricted securities to specified institutions by persons other than the issuer of such securities. The transactions covered by the safe harbor are private transactions that, on the basis of a few objective standards, can be defined as outside the purview of section 5, without the necessity of undertaking the more usual analysis under sections 4(1) [9] and 4(3) [10] of the Securities Act. Each transaction will be assessed under the Rule individually. The exemption for an offer and sale complying with the Rule will be unaffected by transactions by other sellers.[11] The Commission wishes to emphasize that Rule 144A is not intended to preclude reliance on traditional facts-and-circumstances analysis to prove the availability of an exemption outside the safe harbor it provides.

By providing that transactions meeting its terms are not "distributions," the Rule essentially confirms that such transactions are not subject to the registration provisions of the Securities Act. In the case of persons other than issuers or dealers, the Rule does this by providing that any such person who offers and sells securities in accordance with the Rule will be deemed not to be engaged in a distribution and therefore not to be an underwriter within the meanings of sections 2(11) [12] and 4(1) of the Securities Act. Such persons therefore may rely on the exemption from registration provided by section 4(1) for transactions by persons other than issuers, underwriters or dealers. Dealers have the benefit of an exemption from registration under section 4(3) of the Securities Act, except when they are participants in a distribution or within a specified period after the securities have been offered to the public. The Rule provides that, if the conditions of the Rule are met, a dealer will be deemed not to be a participant in a distribution of securities within the meaning of section 4(3)(C) of the Act [13]

[8] 15 U.S.C. 77e.

[9] 15 U.S.C. 77d(1).

[10] 15 U.S.C. 77d(3).

[11] *See* Rule 144A(e). This paragraph of the Rule was in the initial proposed Rule but was deleted from the reproposal. Commeters requested that it be reinstated, with a reference not only to the Rule's effect on the availability of any other exemption but on the availability of any safe harbor as well. The paragraph has been reinserted, modified in response to comments.

[12] 15 U.S.C. 77b(11).

[13] 15 U.S.C. 77d(3)(C).

and not to be an underwriter of such securities within the meaning of section 2(11) of the Act,[14] and the securities will be deemed not to have been offered to the public within the meaning of section 4(3)(A) of the Act.[15]

Nothing in the Rule removes the need to comply with any applicable state law relating to the offer and sale of securities. Similarly, the Rule does not affect the securities registration requirements of section 12 of the Exchange Act [16] or the broker-dealer registration requirements of section 15(a) of the Exchange Act [17] for a broker or dealer who effects private resales.[18]

In the case of securities originally offered and sold under Regulation D of the Securities Act, [19] a person that purchases securities from an issuer and immediately offers and sells such securities in accordance with the Rule [20] is not an "underwriter" within the meaning of Rule 502(d) of Regulation D. Issuers making a Regulation D offering, who generally must exercise reasonable care to assure that purchasers are not underwriters, therefore would not be required to preclude resales under Rule 144A. Similarly, the fact that purchasers of securities from the issuer may purchase such securities with a view to reselling such securities pursuant to the Rule will not affect the availability to such issuer of an exemption under section 4(2) of the Securities Act from the registration requirements of the Securities Act.

B. Eligible Securities

Rule 144A would not extend to the offer or sale of securities that, when issued, were of the same class as securities listed on a national securities exchange registered under section 6 of the Exchange Act [21] or quoted in an automated inter-dealer quotation system.[22]

Accordingly, privately-placed securities that, at the time of their issuance, were fungible with securities trading on a U.S. exchange or quoted in NASDAQ would not be eligible for resale under the Rule.

Where American Depositary Shares ("ADSs") are listed on a U.S. exchange or quoted in NASDAQ, the deposited securities underlying the ADSs also would be considered publicly traded, and thus securities of the same class as the deposited securities could not be sold in reliance on the Rule.

For purposes of the Rule, common equity securities will be deemed to be of the same class if they are of substantially similar character and the holders thereof enjoy substantially similar rights and privileges.[23] Preferred equity securities will be deemed to be of the same class if their terms relating to dividend rate, cumulation, participation, liquidation preference, voting rights, convertibility, call, redemption and other similar material matters are substantially identical. Debt securities will be deemed to be of the same class if their terms relating to interest rate, maturity, subordination, security, convertibility, call, redemption and similar material matters are substantially identical. Preferred and debt securities commonly viewed as different series will generally be viewed as different, non-fungible classes of securities for Rule 144A purposes.[24]

In order to prevent evasion of the Rule's non-fungibility condition through use of convertible securities, the Rule as reproposed would have been unavailable for resales of convertible securities unless such securities were non-convertible for three years. This provision has been revised to avoid undue interference with common financing activities. Under the Rule, a convertible security is to be treated as both the convertible and the underlying security unless, at issuance, it is subject to an effective conversion premium of at least 10 percent.[25]

Similarly, warrants, either trading as part of a unit with another security or separately, will be treated as securities of the same class as the underlying security unless the warrant has a life of at least three years and an effective exercise premium of at least 10 percent.[26] The Rule has been revised to provide that the Commission may designate additional securities and classes of securities that will not be deemed of the same class as an underlying security.[27] This change and

[14] 15 U.S.C. 77b(11).

[15] 15 U.S.C. 77d(3)(A).

[16] Broker-dealers are required to register with the Commission pursuant to section 15(a) of the Exchange Act. *See* 15 U.S.C. 78*o*(a).

[17] 15 U.S.C. 78*o*(a).

[18] Likewise, the Rule will have no effect on the application of Rule 10b-6 under the Exchange Act to an offer and sale of securities pursuant to Rule 144A "that is distinguished from ordinary trading transactions by the magnitude of the offerings and the presence of special selling efforts and selling methods." Rule 10b-6(c)(5) [17 CFR 240.10b-6(c)(5)]. It is unlikely, however, that ordinary resale transactions, in the form of block trades or otherwise, effected in compliance with the Rule would fall within the definition of "distribution" in Rule 10b-6.

Commenters inquired about the application to transactions under the Rule of section 11(d)(1) of the Exchange Act, limiting the extension of credit by broker-dealers in distributions of new issues. The comments did not make clear the likely impact of section 11(d)(1) in this market, particularly given the constraints of the margin provisions of Regulation T under the Exchange Act [12 CFR part 220 *et seq.*] and the limited use of credit by institutional buyers in most transactions. The Commission staff, however, is prepared to consider providing interpretive relief under section 11(d)(1) in appropriate circumstances for resales under this Rule.

[19] 17 CFR 230.501-506.

[20] The Rule is not available for a transaction that, although in technical compliance therewith, is part of a plan or scheme to evade the registration provisions of the Act. *See* Preliminary Note 3 to Rule 144A.

[21] 15 U.S.C. 78f.

[22] Consistent with the use of the term in Rule 12g3-2(d), an "automated inter-dealer quotation system" would include NASDAQ but would exclude bid and ask quotations in the current "pink sheets" of the National Quotation Bureau, Inc.

[23] This test is the same as that in section 12(g)(5) of the Exchange Act (15 U.S.C. 781(g)(5)) and will be interpreted by the Commission in the same manner.

[24] It should be noted that with regard to non-investment grade non-convertible debt, use of the term "class" in the context of Exchange Act Rule 10b-6 may be interpreted differently than in the context of Rule 144A. *See* 17 CFR 240.10b-6 and Securities Exchange Act Release No. 19565 (Mar. 4, 1983) [48 FR 10628].

[25] The effective conversion premium of a convertible security, expressed in monetary terms, is its price at issuance less its conversion value (the aggregate market value of the securities that would be received upon conversion). For purposes of the Rule, the effective conversion premium is to be expressed as a percentage of the conversion value. The conversion value is to be determined by reference to the market price of the underlying security on the day the convertible security was priced. The market price of the underlying security may be determined by reference to any *bona fide* sale price in a transaction occurring on a national securities exchange or automated interdealer quotation system on the day of pricing of the convertible security.

[26] The effective exercise premium of a warrant is its price at issuance plus its aggregate exercise price less its exercise value (the aggregate market value of the securities that would be received upon exercise). For purposes of the Rule, the effective exercise premium is to be expressed as a precentage of the exercise value. The exercise value is to be determined by reference to the market price of the underlying security on the day the warrant is priced.

For example, if the price of a warrant at issuance is $10, and it is exercisable into 10 shares of common at $25 per share (*i.e.*, the aggregate exercise price is $250, the product of $25 multiplied by 10), and the market price of the common is $23 on the day the warrant is priced (*i.e.*, the exercise value is $230, the product of $23 multiplied by 10), then the effective exercise premium would be 13.04% ($30 [obtained by subtracting the exercise value of $230 from $260, the sum of the warrant's price at issuance ($10) and its aggregate exercise price ($250)] as a percentage of $230).

In private placements, subunderwritten offerings and similar transactions, there may be different prices at issuance and different days of pricing of convertible securities or warrants. In such cases, the market price of the underlying security shall be determined as of the date of pricing of the convertible security or warrant first sold to a person not affiliated with the issuer, and the issue price of the convertible security or warrant shall be the lowest price at which such security is issued.

[27] Authority to designate such additional securities and classes of securities is delegated to the Director of the Division of Corporation Finance.

the revised criteria should assure that the Rule will not unduly interfere with common financing practices and still protect against use of convertible securities and warrants designed to evade the Rule's limitations.

As noted in Preliminary Note 3 to the Rule, transactions technically in compliance with the Rule that nevertheless are intended to evade the registration provisions of the Securities Act are not covered by the Rule. Thus, where an issuer resorted to use of convertible securities or warrants for the purpose of evading the restriction on fungibility, the Rule would not be available.[28]

C. Eligible Purchasers

1. Types of Institutions Covered

As discussed above, except for registered broker-dealers, to be a "qualified institutional buyer" an institution must in the aggregate own and invest on a discretionary basis at least $100 million in securities of issuers that are not affiliated with the institution.

a. *Banks and Savings and Loan Associations.* Banks, as defined in section 3(a)(2) of the Securities Act,[29] and savings and loan associations as referenced in section 3(a)(5)(A) of the Act,[30] must, in addition to owning and investing on a discretionary basis at least $100 million in securities, have an audited net worth [31] of at least $25 million, as demonstrated in their latest published annual financial statements, as of a date not more than 16 months preceding the date of sale under the Rule in the case of U.S. banks and saving and loans, and not more than 18 months preceding such date of sale for foreign banks and savings and loans or equivalent institutions.[32] As federally-insured depository institutions, domestic banks and savings and loans are able to purchase securities with funds representing deposits of their customers. These deposits are backed by federal insurance funds administered by the Federal Deposit Insurance Corporation ("FDIC").[33] In light of this government support, these financial institutions are able to purchase securities without placing themselves at risk to the same extent as other types of institutions. In this respect, banks and savings and loans effectively are able to purchase securities using public funds. Therefore, the amount of securities owned by a bank or savings and loan institution may not, on its own, be a sufficient measure of such institution's size and investment sophistication, and Rule 144A is intended to cover only resales to institutions that are sophisticated securities investors. A combined securities ownership and net worth test would appear to be a better measure of sophistication for banks and savings and loan institutions.

Foreign banks [34] and their U.S. branches are treated in the same way as domestic banks under the Rule.[35] The Commission is of the opinion that, for competitive purposes, it would not be appropriate to treat foreign and domestic banks differently under the Rule.[36]

An affiliate of a bank or savings and loan institution is not subject to the net worth test unless the affiliate is itself a bank or savings and loan institution. It should be noted that the eligibility of registered broker-dealer affiliates of banks and savings and loan associations to purchase securities under the Rule will be determined on the same basis as would apply in the case of other registered broker-dealers.

The Commission solicits comment on the appropriateness of the net worth test, as well as on the $25 million threshold, and specifically requests comment as to whether a higher or lower threshold (such as any of those reflected by the net worth categories in the appendix described below) [37] should be used or any other modification should be made to the standard for banks and savings and loans. Should different criteria be used for these institutions? Further, the Commission requests comment on the appropriateness of applying the same net worth test to foreign banks. The Commission will assess the comments and, if the Commission deems it appropriate, adopt revised eligibility criteria for banks and savings and loan institutions.

b. Registered Broker-Dealers. Under the reproposal, registered broker-dealers would have been required to have more than $100 million invested in securities in order to participate as principal in the market created by the Rule. The Commission requested comment regarding the extent, if any, to which the threshold should be changed to avoid undue disruption of current resale practices or markets for restricted securities. Comment was requested as to the threshold of eligible participants necessary to achieve the efficiencies in the private placement market expected to result from the Rule.

Commenters stated that the definition of qualified institutional buyer, as reproposed, would exclude a number of registered broker-dealers from acting as intermediaries in the Rule 144A resale market. They also stated that if the $100 million test was retained for registered broker-dealers in all situations, significant segments of the registered broker-dealer community, whose participation was important to the efficient functioning of the market, would be excluded from participation in the market as principals.

In response to these comments, the Rule as adopted provides that a broker-dealer registered under the Exchange Act which in the aggregate owns and invests on a discretionary basis at least $10 million in securities of issuers that are not affiliated with the broker-dealer is a qualified institutional buyer. Additionally, the Rule provides that registered broker-dealers acting as riskless principals for identified

[28] The issuance of securities upon conversion of convertible securities or exercise of warrants must be registered or otherwise exempt under the Securities Act.

[29] 15 U.S.C. 77c(a)(2).

[30] 15 U.S.C. 77c(a)(5)(A).

[31] For purposes of the Rule, the net worth of a domestic bank equals its equity capital as presented on its audited balance sheet. The balance sheet of an FDIC-insured bank appears in its report of Condition and Income (call report) on Form FFIEC 031. Equity capital includes the institution's perpetual preferred stock, common stock, surplus, undivided profits and capital reserves (less net unrealized loss on marketable equity securities), and cumulative foreign currency translation adjustments. The net worth of a domestic savings and loan association equals its adjusted core capital as presented on its audited balance sheet.

[32] The 18-month standard is the same as used in Rule 3-19 of Regulation S-X (17 CFR 210.3-19) for financial statements of foreign private issuers.

[33] Under the Financial Institutions Reform, Recovery, and Enforcement Act of 1989, Public Law No. 101-73, commercial bank deposits are insured by the Bank Insurance Fund ("BIF"). Savings and loan deposits are insured by the Savings Association Insurance Fund ("SAIF"). Both BIF and SAIF are administered by the FDIC.

[34] For purposes of the Rule, the term "foreign bank" means any entity defined as such by Rule 6c-9(b) (2) and (3) (17 CFR 270.6c-9(b) (2) and (3)) under the Investment Company Act of 1940 (15 U.S.C. 80a-1 *et seq.*).

[35] Although not expressly included in the definition of bank appearing in section 3(a)(2) of the Securities Act, the Commission has interpreted that definition to include U.S. branches of foreign banks in certain circumstances for purposes of the section 3(a)(2) exemption. *See* Securities Act Release No. 6661 (Sept. 23, 1986) (51 FR 34460).

[36] A foreign bank's net worth equals the amount of equity capital shown on its most recently prepared balance sheet, prepared in accordance with accounting principles generally accepted and/or mandated by law or regulation for banks in the jurisdiction of its organization or incorporation.

[37] An appendix following the text of this release presents information showing the numbers of banks and savings and loan institutions holding at least $100 million in securities, differentiated by net worth levels.

qualified institutional buyers would themselves be deemed to be qualified institutional buyers. The broker-dealer must at the time of the purchase have a commitment from a qualified institutional buyer that it will simultaneously purchase the securities from the broker-dealer to qualify as a riskless principal for purposes of the Rule.[38] Riskless principal transactions are defined in the Rule as those involving a simultaneous purchase from any person and sale to a qualified institutional buyer, including another dealer acting as riskless principal for a qualified institutional buyer. A note has been added to the Rule to emphasize that a registered broker-dealer may act as agent, on a non-discretionary basis, in a sale to a qualified institutional buyer.

The Rule does not alter the registration requirements under section 15(a) of the Exchange Act [39] for persons that function as either a broker or a dealer in transactions pursuant to Rule 144A. As a general matter, any person that acts as agent for issuers in privately placing securities, or as agent for sellers or purchasers in reselling those securities, would be a "broker" as defined in section 3(a)(4) of the Exchange Act,[40] and would be required to register with the Commission as a broker-dealer.[41]

In addition, institutions that act as dealers, as defined in Section 3(a)(5) of the Exchange Act,[42] would be required to register. Although by its terms the definition of "dealer" is broad, an interpretive "rule of reason" [43] has been applied to exclude various activities not within the intent of the definition, such as buying and selling for investment.[44] The definition of "dealer" would include an institution that, in addition to investing in Rule 144A securities, also holds itself out to other institutions as willing to buy and sell such securities on a regular and continuous basis, such as by publishing two-sided quotations. More generally, an institution that buys securities from an issuer with a view to reselling them promptly at a profit not contingent on external price appreciation or other market developments would be a dealer.[45]

For purposes of the Rule, securities "owned" by broker-dealers include those held in their investment and trading accounts. Accordingly, the market-making inventories of broker-dealer firms may be counted toward satisfying the $10 million eligibility threshold. However, securities that are all or part of a broker-dealer's unsold allotment of, or subscription to, securities in a public offering are specifically excluded.

c. *Others.* Any corporation or partnership (wherever organized) that meets the $100 million in securities threshold may purchase under the Rule, except for a bank or savings and loan institution which must also satisfy the net worth test. Eligible purchasers under the Rule include entities formed solely for the purpose of acquiring restricted securities, if they satisfy the qualifying test.

2. Calculation of Qualifying Amount

The reproposed Rule would have required that eligible investors have the threshold amount "invested in securities" In the interest of clarity, this phrase has been changed to refer to institutions that own the requisite amount of securities.

Under the Rule as reproposed, aggregation of affiliated holdings for purposes of calculating the qualifying amount would have been allowed only for certain bank holding companies and their wholly-owned subsidiaries. Some commenters, stating that banks should not be treated differently than other institutions with such a corporate structure, suggested that this aggregation principle be broadened and extended beyond the banking context. Additionally, several commenters suggested that consolidated financial statements be used in determining the amount of securities owned by an institution. One of the reasons set forth for the use of such statements was the difficulty in obtaining information on an unconsolidated basis. In response to these comments, the Rule as adopted permits the ultimate parent company in a corporate structure to aggregate holdings of its wholly-owned and majority-owned subsidiaries, if the investments of such affiliated companies are managed under the direction of the ultimate parent. In addition, the Rule permits a wholly-owned or majority-owned subsidiary, reporting under the Exchange Act, to aggregate the holdings of its wholly-owned and majority-owned subsidiaries if the investments of those subsidiaries are managed under the direction of such reporting subsidiary. Thus, for example, if Corporation A is wholly-owned by Corporation B, which in turn is wholly-owned by Corporation C, Corporation C may aggregate the holdings of Corporations A and B, if the investments of those entities are managed under the direction of C; and Corporation B may aggregate the holdings of Corporation A only if Corporation B is a reporting company under the Exchange Act and the investments of Corporation A are managed under the direction of B.

As regards eligibility of a registered investment company, aggregation is permitted for a "family of investment companies." Due to the existence of a common investment adviser or affiliated investment advisers, allowing aggregation in this context would appear appropriate. The Rule as revised establishes one test for a "family of investment companies" rather than two tests (one for separate accounts and one for other investment companies) as was originally proposed. This permits aggregation of the assets of separate accounts with those of other investment companies managed by the same adviser, or affiliated advisers, as

[38] Comparable transactions are described in Exchange Act Rules 10b-10(a)(8)(i)(A) [17 CFR 240.10b-10(a)(8)(i)(A)] (relating to confirmation of transactions) and 15c3-1(a)(2)(vi) [17 CFR 240.15c3-1(a)(2)(vi)] (relating to net capital requirements for brokers and dealers).

[39] 15 U.S.C. 78o(a).

[40] 15 U.S.C. 78c(a)(4).

[41] Persons acting as brokers even for sophisticated institutional investors are subject to this registration requirement. *See generally* Securities Exchange Act Release No. 27017 (July 11, 1989) [54 FR 30013, 30015] (requiring registered broker-dealer intermediation in foreign broker-dealer trades with major U.S. institutions, because "[t]he Commission does not believe that sophistication is in all circumstances an effective substitute for broker-dealer registration."); Securities Exchange Act Release No. 27018 (July 11, 1989) [54 FR 30087, 30090] ("Recent experience indicates that major institutional investors can benefit from the safeguards provided by the U.S. [broker-dealer] regulatory system.").

[42] 15 U.S.C. 78c(a)(5). Section 3(a)(5) defines "dealer" as "any person engaged in the business of buying and selling securities for his own account, through a broker or otherwise, but does not include a bank, or any person insofar as he buys and sells securities for his own account, either individually or in some fiduciary capacity, but not as a part of a regular business."

[43] *Cf.* Douglas & Bates, *Some Effects of the Securities Act Upon Investment Banking*, 1 U. Chi. L. Rev. 283, 302 n.68 (1934); Douglas & Bates, *The Federal Securities Act of 1933*, 43 Yale L.J. 171, 206 n.189 (1933) ("rule of reason" should apply to similarly broad "dealer" definition in section 2(12) of Securities Act).

[44] *See generally* Letter from Robert L.D. Colby, Chief Counsel, Division of Market Regulation, SEC, to Elizabeth Tolmach, Caplin & Drysdale (April 2, 1987) (United Savings Association of Texas) (factors indicating status as government securities dealer).

[45] Questions concerning the need for broker-dealer registration should be addressed to the Chief Counsel of the Division of Market Regulation. Persons that exercise broker-dealer functions without registration would not be eligible to purchase under the Rule on the terms that are available only to registered broker-dealers.

suggested by one commenter.[46] The Rule also has been revised to preclude the double counting of assets, for example, in the case of a unit investment trust ("UIT") whose assets consist solely of the shares of a mutual fund. Finally, the Rule has been revised so that a "family of funds" does not include each series of a series investment company unless the series have the same adviser or affiliated advisers.

Under the Rule as reproposed, eligibility of an investment adviser would have been determined by aggregating proprietary securities holdings with those under management. No other types of institutions holding securities in discretionary or fiduciary accounts, such as banks, would have been permitted to count assets under management in determining eligibility. In response to comments opposing this differential treatment, the new Rule provides that, for all types of institutions listed in the Rule, securities in which any such institution invests on a discretionary basis may be counted toward satisfying the eligibility threshold applicable to the institution.

The aggregate value of the securities owned and invested on a discretionary basis is to be determined by their cost, except where the buyer reports its securities holdings in its financial statements on the basis of their market value, and no current figures with respect to cost of those securities are publicly available, in which case the securities may be valued at market for purposes of the Rule.

Commenters on the reproposed Rule requested that the Commission clarify the meaning of the term "security" in the context of the eligibility test. Generally, any instrument that, but for a specific exemption, would have to be registered with the Commission under the Securities Act would be treated as a security for this purpose.[47] However, under the Rule as adopted, certain instruments, whether or not they would be securities under the Securities Act, may not be included in calculation of the qualifying amount. Securities issued or guaranteed by the United States or by any person controlled or supervised by and acting as an instrumentality of the Government of the United States pursuant to authority granted by the Congress of the United States, bank deposit notes and certificates of deposit, loan participations, repurchase agreements, securities owned but subject to a repurchase agreement, and interest rate, currency, and commodity swaps, may not be included in calculating whether the test for eligibility is met.

3. Proof of Eligibility

In order to rely on the Rule, the seller and any person acting on its behalf must reasonably believe that the prospective purchaser is a qualified institutional buyer. The Rule provides several non-exclusive means of satisfying this requirement. Specifically, the seller and any person acting on its behalf may rely on the following sources of information concerning the amount of securities owned and invested on a discretionary basis by the prospective purchaser, provided such information is as of a date not more than 16 months preceding the date of sale under the Rule in the case of a U.S. purchaser and not more than 18 months preceding such date of sale for a foreign purchaser: [48]

(1) The prospective purchaser's most recent publicly available annual financial statements;

(2) The most recent information appearing in documents filed by the prospective purchaser with the Commission or another United States federal, state, or local governmental agency or self-regulatory organization, or with a foreign governmental agency or foreign self-regulatory organization; and

(3) The most recent information appearing in a "recognized securities manual." [49]

The seller and any person acting on its behalf would be able to rely on the foregoing information notwithstanding the existence of other, more current, information that may show a lower amount of securities owned by the prospective purchaser.

Whether or not the foregoing information is available, the seller and any person acting on its behalf also may rely on a certification by the purchaser's chief financial officer, or another executive officer, specifying the amount of securities owned and invested on a discretionary basis by the purchaser as of a specific date on or since the close of the purchaser's most recent fiscal year.

When the prospective purchaser is a member of a family of investment companies, the seller and any person acting on its behalf would be able to rely on the foregoing information with respect to each member of the family, or, in the case of the certification method, a certification of an executive officer of the investment adviser.

The bases for reliance listed in the Rule are, as stated above, non-exclusive, and sellers may be able to establish a reasonable belief of eligibility based on factors other than those cited. On the other hand, the seller could not rely on certifications, for example, that it knew, or was reckless in not knowing, to be false. Unless circumstances exist giving a seller reason to question the veracity of the certification, the seller would not have a duty of inquiry to verify the certification.

4. Purchases on Behalf of Third Parties

A qualified institutional buyer is able to purchase only for its own account or for the accounts of other qualified institutional buyers. This limitation is intended to assure that Rule 144A will not be used for indirect distributions to the retail market through managed accounts. Under the reproposed Rule, an exception to this limitation would have been provided for banks, certain bank holding companies and their wholly-owned subsidiaries, and savings and loan associations that had accounts over which they exercised investment discretion with aggregate assets invested in securities of more than $100 million. These institutions could have purchased for managed accounts.

Commenters took issue with this different treatment for bank and savings and loan fiduciaries, suggesting that these financial institutions should not be distinguished from other institutions, such as investment advisers and broker-dealers, that exercise investment discretion over the accounts of others. Accordingly, the new Rule eliminates this differential by permitting qualified institutional buyers (including banks and savings and loan fiduciaries) to purchase only for their own accounts (or for the accounts of other qualified institutional buyers).

---

[46] A sub-adviser is an investment adviser as that term is defined by section 2(a)(20) of the Investment Company Act [15 U.S.C. 80a-2(a)(20)]. *See, e.g.*, Managed Funds Incorporated, 39 SEC 313 (1959). Where the same entity is designated as a sub-adviser for one fund and as an investment adviser or sub-adviser for another, both funds would be part of a family of investment companies for purposes of the Rule.

[47] *See* section 2(1) of the Securities Act [15 U.S.C. 77b(1)].

[48] The 18-month standard is the same as used in Rule 3-19 of Regulation S-X [17 CFR 210.3-19] for financial statements of foreign private issuers.

[49] The scope of the term "recognized securities manual" would be a matter of interpretation. Many states have exemptions based on publication in a recognized securities manual. The Commission recognizes for this purpose similar manuals, such as Standard & Poor's Corporation Records; Moody's publications, including the Industrial, Transportation, OTC Industrial, the Bank and Finance, the Public Utility, and the International manuals, and Best's Insurance Reports. Questions as to any other particular publication will be answered by the staff.

D. Information Requirement

The initial proposal would not have required the provision of any information about the issuer of the securities to be resold under the Rule. In response to commenters' concerns regarding the lack of available information about some issuers, the reproposed Rule would have required that, if the issuer were neither a reporting company under the Exchange Act nor exempt from Exchange Act reporting pursuant to Rule 12g3–2(b),[50] the seller provide to the buyer upon request the issuer's financial statements and very basic information concerning the issuer's business.[51]

A number of commenters on the reproposal expressed opposition to the information requirement, some stating that the potential for liability for the information provided would discourage sellers from using the Rule and that, if an information requirement were included in the Rule, the onus of providing the information should be on the issuer. Commenters further stated that the securities of foreign governments should be exempt from any information requirement.

As adopted, availability of the Rule is conditioned upon the holder and a prospective purchaser designated by the holder having the right to obtain from the issuer, upon the holder's request to the issuer, certain basic financial information, and upon such prospective purchaser having received such information at or prior to the time of sale, upon such purchaser's request to the holder or the issuer. This information is required only where the issuer does not file periodic reports under the Exchange Act,[52] and does not furnish home country information to the Commission pursuant to Rule 12g3–2(b). Additionally, the Rule has been revised to exempt from the information requirement securities issued by a foreign government eligible to register securities under the Securities Act on Schedule B.[53] The holder must be able to obtain, upon request, and the prospective purchaser must be able to obtain and must receive if it so requests, the following information (which shall be reasonably current [54] in relation to the date of resale under Rule 144A): A very brief statement of the nature of the issuer's business and of its products and services offered, comparable to that information required by subparagraphs (viii) and (ix) of Exchange Act Rule 15c2–11(a)(5); and its most recent balance sheet and profit and loss and retained earnings statements, and similar financial statements for such part of the two preceding fiscal years as it has been in operation. The financial information required is the same as that required by subparagraphs (xii) and (xiii) of Rule 15c2–11(a)(5). The financial statements should be audited to the extent audited financial statements are reasonably available.

The Commission does not believe that the limited information requirement should impose a significant burden on those issuers subject to the requirement. Many foreign issuers that will be subject to the requirement, which were the focus of the commenters' concern, will have securities traded in established offshore markets, and already will have made the required information publicly available in such markets. Even for domestic issuers, the required information represents only a portion of that which would be necessary before a U.S. broker or dealer could submit for publication a quotation for the securities of such an issuer in a quotation medium in the United States.[55] The Commission expects that the kinds of information commonly furnished under Rule 12g3–2(b) by foreign private issuers almost invariably would satisfy the information requirement and that foreign private issuers who wish their securities to be Rule 144A-eligible will simply obtain a Rule 12g3–2(b) exemption on a voluntary basis. Financial statements meeting the timing requirements of the issuer's home country or principal trading markets would be considered sufficiently current for purposes of the information requirement of the Rule.

With respect to mortgage- and other asset-backed securities, for purposes of the information requirement the servicer of the assets or trustee of the trust having title to the mortgage loans or other assets, acting on behalf of the trust or other legal entity, shall be deemed to be the "issuer." Instead of the financial statements and other information required about issuers of more traditional structure, the Commission would interpret the information requirement to mandate provision of basic, material information concerning the structure of the securities and distributions thereon, the nature, performance and servicing of the assets supporting the securities, and any credit enhancement mechanism associated with the securities.

The Rule does not specify the means by which the right to obtain information would arise. The obligation could be, *inter alia*, imposed in the terms of the security, by contract, by corporate law, by regulatory law, or by rules of applicable self-regulatory organizations.

E. Other Requirements

Although the Rule imposes no resale restrictions, a seller or any person acting on its behalf must take reasonable steps to ensure that the buyer is aware that the seller may rely on the exemption from the Securities Act's registration requirements afforded by Rule 144A.

In the original proposing release, the Commission expressed concerns regarding the possibility that non-reporting foreign issuers' securities, originally issued to and resold among institutions in a transaction or chain of transactions not involving any public offering, would flow into the retail market and become widely held by non-institutional investors without adequate publicly available information concerning the issuer, because of the exemption from the Exchange Act's reporting requirements provided by Rule 12g3–2(b).[56] Commenters advised the Commission that such concerns should not be resolved by repealing or otherwise amending Rule 12g3–2(b), on which more than 1100 foreign issuers currently rely.

Rather than modify Rule 12g3–2(b), the Reproposal would have imposed resale restrictions on securities of non-reporting foreign private issuers traded in both a U.S. and a foreign securities market which are sold in reliance upon

[50] 17 CFR 240.12g3–2(b).

[51] *See* proposed Rule 144A(d)(4).

[52] Securities of issuers that report under the Exchange Act to agencies other than the Commission are eligible for resale with no other information required. *See* section 12(i) of the Exchange Act [15 U.S.C. 78*l*(i)].

[53] *See* Securities Act section 7 [15 U.S.C. 77g] and Rule 405 of Regulation C under the Securities Act [17 CFR 230.405].

[54] The requirement that the information be "reasonably current" will be presumed to be satisfied if:

(1) the balance sheet is as of a date less than 16 months before the date of resale, the statements of profit and loss and retained earnings are for the 12 months preceding the date of such balance sheet, and if such balance sheet is not as of a date less than 6 months before the date of resale, it shall be accompanied by additional statements of profit and loss and retained earnings for the period from the date of such balance sheet to a date less than 6 months before the date of resale; and

(2) the statement of the nature of the issuer's business and its products and services offered is as of a date within 12 months prior to the date of resale; or

(3) with regard to foreign private issuers, the required information meets the timing requirements of the issuer's home country or principal trading markets.

This provision was derived from Exchange Act Rule 15c2–11(g) [17 CFR 240.15c2–11(g)].

[55] *See* Rule 15c2–11(a)(5) [17 CFR 240.15c2–11(a)(5)].

[56] Proposing Release, 53 FR at 44023.

the Rule,[57] and revised the proposed amendments to Rule 144 to preclude "tacking" of holding periods for securities issued by non-reporting foreign private issuers. Thus, resales of such securities into the retail market under Rule 144 could have been made only after the investor had held the security for at least two years.

Commenters on the Reproposal opposed the proposed resale restrictions and tacking preclusion for securities of non-reporting foreign private issuers. They asserted that these provisions would substantially reduce the intended benefits of Rule 144A with respect to foreign securities, and were unnecessary because resales outside the U.S. institutional market are most likely to flow back to the dominant offshore market and not into the U.S. retail market. The Commission is persuaded of the merits of these comments and has deleted the proposed resale restrictions and tacking preclusion.

F. Investment Company Act Issues

Several commenters on the initial proposal stated that adoption of Rule 144A would necessitate a reevaluation of the limits currently placed on investments in restricted securities by investment companies that issue redeemable securities ("open-end funds"),[58] and are required by section 22(e) of the Investment Company Act to make payment to shareholders for securities tendered for redemption within seven days of their tender.[59] These investment companies must maintain a high degree of liquidity to assure that portfolio securities can be sold and the proceeds used to meet redemptions in a timely manner. Under a long-standing Commission interpretive position, a restricted security would generally be regarded as illiquid.[60] The Commission is modifying this position with respect to securities eligible for resale under Rule 144A. The determination of the liquidity of Rule 144A securities in the portfolio of an investment company issuing redeemable securities is a question of fact for the board of directors to determine, based upon the trading markets for the specific security. The board should consider the unregistered nature of a Rule 144A security as one of the factors it evaluates in determining whether or not a security is illiquid.[61] Generally, an "illiquid security" is any security that cannot be disposed of within seven days in the ordinary course of business at approximately the amount at which the company has valued the instrument.[62]

The Commission is not, at this time, requiring that any particular factors be considered by investment companies in making liquidity determinations for Rule 144A securities. After having an opportunity to evaluate the experience of investment companies with the Rule, the staff may publish guidelines discussing factors that should be considered in making such liquidity decisions. The Commission understands that a number of factors are currently considered by investment companies in reaching liquidity decisions. Examples of factors that would be reasonable for a board of directors to take into account with respect to a Rule 144A security (but which would not necessarily be determinative) would include, among others: (1) The frequency of trades and quotes for the security; (2) the number of dealers willing to purchase or sell the security and the number of other potential purchasers; (3) dealer undertakings to make a market in the security; and (4) the nature of the security and the nature of the marketplace trades (*e.g.*, the time needed to dispose of the security, the method of soliciting offers, and the mechanics of transfer).

A commenter requested that the Commission make clear that Rule 144A resales of securities of investment companies do not constitute a "public offering" within the meaning of section 3(c)(1)[63] or 7(d)[64] of the Investment Company Act. Section 3(c)(1) exempts "private" investment companies from registration under the Investment Company Act if the company's outstanding securities (other than short-term paper) are beneficially owned by not more than 100 persons and the company is not making and does not presently propose to make a public offering of its securities. Section 7(d) prohibits foreign investment companies from using jurisdictional means to publicly offer their securities for sale in the United States unless the company receives an order permitting it to register under the Investment Company Act. In *Touche Remnant* (pub. avail. August 27, 1984), the staff of the Division of Investment Management took the position that a foreign investment company could engage in a private offering to U.S. persons coincident with a public offering outside the U.S. without traditional concepts of integration applying [*See* Securities Act Release No. 4708 (July 9, 1964)] as long as the offering using jurisdictional means in the U.S. did not cause shares of the fund to be beneficially owned by more than 100 U.S. residents. Thus, the term "public offering" in section 7(d) of the Act was interpreted to include an offer by jurisdictional means that causes the shares of a foreign investment company to be beneficially owned by more than 100 U.S. residents.

The Commission believes that resales of privately placed investment company securities pursuant to the safe harbor provisions of Rule 144A would not cause the issuing investment company to lose the exemption provided by section 3(c)(1) or cause a violation of section 7(d) of the Investment Company Act as long as after the resale the securities are held, for purposes of section 3(c)(1), by no more than 100 beneficial owners or,

[57] *See* proposed Rule 144A(d)(5).

[58] *See* sections 5(a)(1) and 4(2) of the Investment Company Act of 1940 [15 U.S.C. 80a-5(a)(1) and 80a-4(2)].

[59] 15 U.S.C. 80a-22(e).

[60] Investment Company Act Release No. 5847 (Oct. 21, 1969) [35 FR 19989] ("Release 5847"). The Commission stated in Release 5847 that the prudent limit on any open-end fund's holdings of restricted securities or securities not having readily available market quotations would be ten percent. *See* Guide 13 to Form N-1A [17 CFR 274.11A]. A commenter raised a question as to how foreign securities are treated for purposes of this limitation. The Commission recognizes that foreign securities would not necessarily be illiquid for purposes of the ten percent test, despite their restricted nature, if the foreign security can be freely traded in a foreign securities market and all the facts and circumstances support a finding of liquidity.

[61] The Commission believes that the ultimate responsibility for liquidity determinations is that of the board of directors. However, the board may delegate the day-to-day function of determining the liquidity of securities to the fund's investment adviser, provided that the board retains sufficient oversight. *See, e.g.*, Investment Company Act Release No. 13005 (Feb. 2, 1983) (48 FR 5694); Investment Company Act Release No. 13380 (July 11, 1983) [48 FR 32555] (discussing delegation by the board of directors of its duty to evaluate the creditworthiness of broker-dealers with which the company proposes to enter into repurchase agreements under Rule 2a-7 [17 CFR 270.2a-7] under the Investment Company Act). The Board (or its delegatee) should also continue to monitor the liquidity of Rule 144A securities. If as a result of changed conditions, it is determined that a Rule 144A security is no longer liquid, the fund's holdings of illiquid securities should be reviewed and the board should determine if any steps are required to assure that the ten percent test continues to be satisfied. In the case of a UIT, which has no board of directors or adviser, the responsibility for liquidity determinations is that of the depositor who also acts as sponsor for the trust (the "sponsor"). Where the sponsor has delegated the function of supervising the portfolio after the date of deposit to a provider of portfolio supervisory services, it may delegate the day-to-day function of determining the liquidity of portfolio securities to such provider, provided that the sponsor retains sufficient oversight.

[62] Investment Company Act Release No. 14983 (Mar. 12, 1986) [51 FR 9773] (adopting amendments to Rule 2a-7).

[63] 15 U.S.C. 80a-3(c)(1).

[64] 15 U.S.C. 80a-7(d).

for purposes of section 7(d), by no more than 100 beneficial owners who are U.S. residents. Moreover, the Commission believes that a resale in reliance on Rule 144A, even if anticipated by the issuing investment company, would not, in and of itself, result in the company "having reason to believe that such security * * * will be made the subject of a public offering" within the meaning of section 7(a) of the Investment Company Act.[65] However, Rule 144A will not obviate the obligation of a company to register or, in the case of a foreign investment company, to apply for an exemptive order permitting it to register, under the Investment Company Act if, with regard to a domestic company, there are more than 100 beneficial owners of its securities, or, with regard to a foreign company, there will be more than 100 U.S. residents who are beneficial owners of its securities.

G. Uniform Net Capital Rule

In 1975, at the time of the adoption of the present Uniform Net Capital Rule, the Division of Market Regulation issued an interpretive letter concerning the liquidity of foreign securities for purposes of the net capital rule.[66] Foreign securities held by a broker-dealer in its proprietary accounts which may be resold through Rule 144A will be treated for net capital purposes as securities discussed in that interpretive letter. That interpretation discussed which foreign securities were liquid for purposes of the net capital rule.

The interpretation treats as liquid those securities which are:

1. Debt securities of a foreign issuer not traded flat or in default as to principal or interest which were publicly issued in a principal foreign securities market [67] by:

(a) A sovereign national government (or an entity guaranteed by such a government) or by a multi-governmental organization; or

(b) A Canadian province or municipality.

2. Debt securities of a foreign issuer not traded flat or in default as to principal or interest which were publicly issued in a principal foreign securities market and which:

(a) Have been rated in one of the top four rating categories by at least two nationally recognized statistical rating services in the United States; or

(b) Rank in a credit position equal or superior to securities of the same issuer which have been issued in the United States and have been rated in one of the top four rating categories by at least two nationally recognized statistical rating services in the United States.

3. Securities of a foreign issuer which were publicly issued in a principal foreign securities market and which are listed on one of the principal exchanges in the major money markets outside the United States.

As to domestic securities, the Division of Market Regulation's position is that those securities which may be resold through Rule 144A (and which otherwise would be subject to a 100% haircut), except for corporate debt securities that are traded flat or in default as to principal or interest or are not rated in one of the four highest rating categories by at least two of the nationally recognized statistical rating organizations, should be treated for net capital purposes in the same manner as those securities that can be publicly offered and sold without registration and that are deemed to have a ready market for purposes of the net capital rule.

III. Changes to Rule 144 and Rule 145

In connection with its consideration of Rule 144A, the Commission has reexamined the principles underlying the determination of holding periods for purposes of Rules 144 and 145. As a result, the Commission today is adopting amendments to Rule 144's tacking concept.[68] While these amendments arose in the context of the development of Rule 144A, they are applicable to all restricted securities, not only to those sold under Rule 144A.

Under Rule 144 as previously in effect, restricted securities [69] generally were required to be held for at least two years before the holder could sell the securities in reliance upon the safe-harbor provisions of Rule 144.[70] Except in limited instances,[71] the holding period of predecessor owners was not combined with, or "tacked" to, the holding period of the person wishing to sell in reliance on Rule 144.[72]

As a result of its reexamination of the tacking concept embodied in Rule 144, the Commission today is amending the Rule to permit holders of restricted securities acquired in a transaction or series of transactions not involving any public offering to add to their own holding period those of prior holders unaffiliated with the issuer. No such tacking will be permitted, however, where the seller has purchased from an affiliate of the issuer whose presence in the chain of title will trigger the commencement of a new holding period. The changes to Rule 144 apply to public resale of securities acquired in reliance upon proposed Rule 144A, including those securities issued by non-reporting foreign private issuers, as well as to public resale of other restricted securities.[73] Requiring securities to be held for two years by each successive holder before permitting Rule 144 resales, without regard to the time elapsed from the date of the sale of the security by the issuer or an affiliate, is unnecessarily restrictive. In the Commission's view, a single period running from the date of the purchase from the issuer or an affiliate of the issuer is sufficient to prevent the distribution by the issuer of securities to the public.

Rule 144(d)(1) thus is amended to allow the two-year period prescribed

[65] 15 U.S.C. 80a-7(a).

[66] Division of Market Regulation letter dated December 29, 1975, to the Securities Industry Association.

[67] The Securities Industry Association as well as individual broker-dealers have asked for reconsideration of the definition of principal foreign securities markets. Their views are presently being considered by the Division of Market Regulation.

[68] Conforming amendments to Rule 145 also are adopted.

[69] The term "restricted securities" previously had been defined in Rule 144(a)(3) (17 CFR 230.144(a)(3)) as securities that are acquired directly or indirectly from the issuer, or from an affiliate of the issuer, in a transaction or chain of transactions not involving any public offering, or securities acquired from the issuer that are subject to the resale limitations of Regulation D or Rule 701(c) (230.701(c) of this chapter) under the Act, or securities that are subject to the resale limitations of Regulation D and are acquired in a transaction or chain of transactions not involving any public offering.

The Commission is amending this provision to reflect the inclusion of securities acquired in Rule 144A transactions.

[70] Rule 144(d)(1) (17 CFR 230.144(d)(1)).

[71] Prior to today's amendments, Rule 144(d)(4) set forth specific provisions that permitted a holder or transferee of restricted securities to "tack" (a) the holding period of the transferor, based on an identity of interest between such transferors and transferees as a pledgor and pledgee (Rule 144(d)(4)(iv)), donor and donee (Rule 144(d)(4)(v)), settlor and trust (Rule 144(d)(4)(vi)), and a decedent and his estate (Rule 144(d)(4)(vii)); and (b) the period of time certain restricted securities were held to the holding period of "related" securities subsequently acquired from the issuer as a dividend or pursuant to a stock split or recapitalization (Rule 144(d)(4)(i)), for consideration consisting solely of such other securities of the same issuer surrendered for conversion (Rule 144(d)(4)(ii)), or as a contingent payment of the purchase price of an equity interest in a business, or the assets of a business, sold to the issuer or an affiliate of the issuer (Rule 144(d)(4)(iii)).

[72] *See* Securities Act Release No. 5223 (Jan. 11, 1972) (37 FR 591). *See also* J. Halperin, Private Placement of Securities 8.19, at 278, 279 (1984); D. Goldwasser, *A Guide to Rule 144*, 439 (1978); Securities Act Release No. 6099 (Aug. 2, 1979) (44 FR 46752) (Questions 33 and 34).

[73] *See supra* n. 69.

therein to run continuously from the acquisition of restricted securities from the issuer, or from any affiliate thereof, until the subsequent resale of the securities by either the initial holder or a subsequent holder. Because of its "issuer" status for purposes of the Rule,[74] an affiliate's resale of securities acquired at some point in a chain of transactions occurring within two years of a non-affiliate's initial acquisition of such securities from the issuer or an affiliate will trigger the commencement of a new period.

Rule 144(k) is amended to permit a non-affiliate, who has been a non-affiliate for at least three months, to resell restricted securities free of the restrictions imposed by paragraphs (c), (e), (f), and (h) of Rule 144 if a period of at least three years, as computed in accordance with amended paragraph (d) of the Rule, has elapsed since the later of the date the securities originally were acquired from the issuer or the date they were acquired from an affiliate of the issuer.

As previously was the case under Rule 144, where the initial acquisition is a sale, the two-year period will not begin to run until the full purchase price has been paid by the person acquiring the securities from the issuer or from an affiliate of the issuer.[75] Thus, new paragraph (d)(1) includes language from prior paragraph (d)(1) referring to commencement of the holding period upon acquisition from the issuer or an affiliate only where the full purchase price or other consideration is paid or given by the acquiror. This is consistent with the Commission's position that consideration for the acquisition of securities may be paid through services and other non-cash media. Likewise carrying forward the requirements of the prior version of the Rule, amended subdivision (d)(2) of the Rule provides that payment for the securities acquired from the issuer or an affiliate by means of a promissory note, other obligation or installment contract will not be deemed full consideration unless specific conditions are met.[76]

Consistent with the focus of the revised approach to determination of the period required prior to the resale of restricted securities in reliance upon Rule 144's safe harbor, the Commission is rescinding existing Rule 144(d)(3). Amended subdivisions (d)(1) and (k) provide for a single two- or three-year period running from the date of acquisition from the issuer or from an affiliate of the issuer. Under this approach, the question whether the initial or any subsequent holder sold short or otherwise held a contingent position in restricted securities is irrelevant, provided the person acquiring the securities from the issuer or an affiliate of the issuer paid full consideration for the securities and the prescribed period has run.

As discussed, the two- and three-year periods established by amended Rules 144(d)(1) and 144(k) begin anew for persons acquiring securities from an affiliate of the issuer. Exceptions to this general rule are preserved expressly in Rules 144(d)(3) (iv) through (vii) for the benefit of persons taking securities from an affiliated pledgor, donor, trust settlor or deceased person.[77] The previous Rule enabled a holder of securities to combine with his own holding period the holding period of either an affiliated or a non-affiliated transferor under those circumstances. By contrast with the "sale" transactions contemplated by previous and newly amended Rule 144(d)(1), pursuant to which an affiliate seller's holding period may not be tacked to that of the buyer, there is an identity of interest between a transferee who acquires securities in what the Commission traditionally has considered to be a non-sale transaction and his transferor. Regardless of whether the transferor in such a non-sale transaction is an affiliate or non-affiliate of the issuer, the transferee thus will continue to be permitted to avail himself of the holding period of his transferor.

Today's revisions to Rules 144(d)(1) and (k) render such provisions unnecessary for transferees of a non-affiliate. Under paragraphs (d)(3) (iv) through (vii), the holding period of an affiliate's pledgee, donee, trust or estate similarly will continue to relate back to the date of acquisition by the affiliate. As under previous paragraph (d)(4)(vii), the two- and three-year periods will not be required for estates and beneficiaries thereof that are not affiliates of the issuer. Paragraphs (c), (h) and (i) of the Rule will continue to apply to securities sold by such persons in reliance upon Rule 144's safe harbor in less than three years.[78]

Historically, the acquisition of securities pursuant to a transaction of the type specified in Rule 145(a) has been considered a purchase from the issuer for purposes of Rule 144.[79] New paragraph (d)(3)(viii) makes it clear, consistent with this view, that the two- and three-year periods established by Rule 144 (d) and (k), respectively, and incorporated in Rule 145(d) would commence running on the date the holder is deemed to have acquired the securities in a Rule 145(a) transaction. Rule 145(d) provides for the resale by such person or party of the securities thus acquired after a period of two or three years as computed under amended Rules 144 (d) or (k). An exception set forth in new Rule 144(d)(3)(viii) codifies the staff's interpretative position that a transaction effected solely for the purposes of forming a holding company will be deemed a "recapitalization" within the meaning of prior Rule 144(d)(4)(i);[80] therefore, the holding period of the holding company's securities may be tacked to that of the predecessor operating company's securities.[81] In determining whether a

[74] For purposes of Rule 144, an affiliate of an issuer "is a person that directly, or indirectly through one or more intermediaries, controls, or is controlled by, or is under common control with, such issuer." Rule 144(a)(1). *See* Rule 405 (17 CFR 230.405). Section 2(11) of the Securities Act defines the term "issuer" to include an affiliate of the issuer. Accordingly, any person purchasing from an affiliate may be deemed a statutory underwriter.

[75] Paragraph (d)(1) of Rule 144.

[76] Paragraph (d)(2) of Rule 144.

[77] These exceptions were set forth in prior Rules 144(d)(4)(iv) through (d)(4)(vii) [17 CFR 230.144(d)(4)(iv)–(d)(4)(vii)]. *See supra* n. 71. Rule 144(d)(4) is renumbered as 144(d)(3) in light of the rescission of prior Rule 144(d)(3).

[78] Rule 144(f) provides that the "broker's transactions" requirement is inapplicable to sales by estates and beneficiaries thereof that are not affiliated with the issuer. Because Note (b) to prior Rule 144(d)(4)(vii) inadvertently was not revised when this exclusion was added to Rule 144(f) in 1978 (*see* Securities Act Release No. 5979 (Sept. 19, 1978) [43 FR 43709]), the Commission is eliminating reference in Rule 144(d)(3)(vii) to the need for compliance with paragraphs (f) and (g).

[79] 17 CFR 230.145(a). As explained in the Preliminary Note to Rule 145, persons who are offered securities in business combinations of the following types may avail themselves of the safe harbor available under the Rule: (1) reclassificaton, other than a stock split, reverse stock split or change in par value, that involves the substitution of one security for another; (2) merger or consolidation; and (3) transfer of assets in consideration of the issuance of securities under certain conditions.

[80] Renumbered as Rule 144(d)(3)(i).

[81] *See Morgan, Olmstead, Kennedy & Gardner Capital Corp.*, [1987–1988 Transfer Binder] Fed. Sec. L. Rep. (CCH) ¶ 78,672 (avail. Dec. 8, 1987) (permitting such tacking subject to four conditions: (1) the holding company stock must be issued solely in exchange for the operating company stock; (2) security holders receive securities of the same class and in the same proportions as exchanged; (3) the holding company is newly formed, has no significant assets except operating company securities imediately after the transaction and, at the time, has substantially the same assets and liabilities, on a consolidated basis, as those of the operating company immediately prior to the transaction; and (4) the rights and interests of common stockholders in the holding company are substantially the same as those they possessed as holders of the operating company's common stock).

transaction has been undertaken solely for the purpose of forming a holding company, the analysis outlined in the Morgan, Olmstead, Kennedy & Gardner Capital Corp. no-action letter must be followed.[82]

Technical amendments have been made to Rule 144(d)(3)(viii), as originally proposed,[83] and paragraphs (d)(2) and (d)(3) of Rule 145, to clarify the Commission's intent that the holding period for securities acquired in a merger or other Rule 145(a) transaction begins at the time of the transaction, not the subsequent date when the securities are issued.

The amendments to Rule 144 are intended only to establish the commencement date for determining the two- and three-year periods, and do not change the required aggregation of the transferor's and transferee's sales in determining compliance with the volume limitations prescribed by Rule 144(e)(2).[84] If the transaction, while denoted as a purchase acquisition, were found in substance to be a non-sale transaction specified in new paragraphs (d)(3) (iv) through (vii) of the Rule, the substance of the transaction would govern and the applicable aggregation principles set forth in Rule 144(e) therefore would apply. Where two or more affiliates or other persons agree to act in concert for the purpose of selling restricted securities, aggregation also may be required under Rule 144(e)(3)(vi).

An amendment to Rule 144(k) also is being adopted to allow a person who has been a non-affiliate for three or more months to resell restricted securities free of the volume, information, manner of sale and Form 144 filing requirements if the securities have been held for at least three years from the later of the date of their acquisition from either an issuer or its affiliate. This amendment is intended solely to incorporate the liberalized tacking principle embodied in revised paragraph (d)(1), pursuant to which the three-year holding period must be calculated. To minimize the potential for misinterpretation, the Commission has revised paragraph (k) further to clarify that a non-affiliate taking restricted securities from an affiliate of the issuer in connection with any of the non-sale transactions set forth in amended paragraphs (d)(3)(iv) through (d)(3)(vii) of Rule 144 will be permitted to sell in accordance with paragraph (k), notwithstanding his transferor's affiliate status, and to tack the latter's holding period to his own for purposes of complying with the three-year requirement.[85]

IV. Availability of Final Regulatory Flexibility Analysis

A Final Regulatory Flexibility Analysis in accordance with the Regulatory Flexibility Act regarding Rule 144A and the amendments to Rules 144 and 145 has been prepared. A corresponding Initial Regulatory Flexibility Analysis was included in the proposing Release and a summary of the revised corresponding Initial Regulatory Flexibility Analysis was included in the reproposing release. Members of the public who wish to obtain a copy of the Final Regulatory Flexibility Analysis should contact Brent H. Taylor, Office of International Corporate Finance, Division of Corporation Finance, U.S. Securities and Exchange Commission, 450 Fifth Street NW., Washington, DC 20549.

V. Cost-Benefit Analysis

No specific data was provided in response to the Commission's request regarding the costs and benefits of Rule 144A. It appears, however, that Rule 144A will provide various benefits, including increased liquidity of restricted securities and greater certainty as to the registration requirements of the Securities Act. As Rule 144A sanctions certain existing practices, is non-exclusive, and does not impose any recordkeeping or reporting requirements, the Commission is not aware of any additional costs that will result from its adoption. It appears that the amendments to Rules 144 and 145 will provide a benefit in that resales may be made sooner under amended Rule 144 than under prior Rule 144. As the amendments do not require any different procedures for resale, the Commission does not anticipate any additional costs to result from the amendments.

VI. Effective Date

Rule 144A and the amendments to Rules 144 and 145 shall be effective immediately upon publication in the **Federal Register**, in accordance with the Administrative Procedure Act, which allows effectiveness in less than 30 days after publication for "a substantive rule which grants or recognizes an exemption or relieves a restriction," 5 U.S.C. § 553(d)(1).

VII. Statutory Basis for Rule and Rule Amendments

Rule 144A is being adopted by the Commission and Rules 144 and 145 are being amended by the Commission pursuant to Sections 2(11), 4(1), 4(3), and 19(a) of the Securities Act of 1933.

List of Subjects

17 CFR Part 200

Administrative practice and procedure; Authority delegations; Organization and functions.

17 CFR Part 230

Reporting and recordkeeping requirements, Securities.

VIII. Text of Rule and Rule Amendments

In accordance with the foregoing, title 17, chapter II of the Code of Federal Regulations is amended as follows:

PART 200—ORGANIZATION; CONDUCT AND ETHICS; AND INFORMATION REQUESTS

1. The authority citation for part 200, subpart A continues to read in part as follows:

Authority: Secs. 19, 23, 48 Stat. 85, 901, as amended; sec. 20, 49 Stat. 833; sec. 319, 53 Stat. 1173; secs. 38, 211, 54 Stat. 841, 855; sec. 308, 101 Stat. 1254 (15 U.S.C. 77s, 78d–1, 78d–2, 78w, 79t, 77sss, 80a–37, 80b–11), unless otherwise noted. * * *

2. Section 200.30–1 is amended by adding new paragraph (i), as follows:

§ 200.30–1 Delegation of authority to Director of Division of Corporation Finance.

* * * * *

(i) With respect to the Securities Act of 1933 (15 U.S.C. 77a, *et seq.*) and Rule 144A thereunder (§ 230.144A of this chapter), taking into account then-existing market practices, to designate any securities or classes of securities to be securities that will not be deemed "of the same class as securities listed on a national securities exchange or quoted in a U.S. automated inter-dealer quotation system" within the meaning of Rule 144A(d)(3)(i) (§ 230.144A(d)(3)(i) of this chapter).

PART 230—GENERAL RULES AND REGULATIONS, SECURITIES ACT OF 1933

1. The authority citation for part 230 is amended by adding the following citation: (citations before * * * indicate general rulemaking authority).

Authority: Sec. 19, 48 Stat. 85, as amended, 15 U.S.C. 77s * * * § 230.144A also issued

---

[82] *See supra* n. 81.

[83] Rule 144(d)(3)(viii), a new addition to Rule 144, was denominated Rule 144(d)(4)(viii) in the Reproposal because Rule 144(d)(3) would have been retained.

[84] 17 CFR 230.144(e)(2)

[85] *See, e.g.*, Everest & Jennings International (Nov. 19, 1981).

under sec. 2, 48 Stat. 74, as amended, 15 U.S.C. 77b; and also sec. 10, 48 Stat. 81 as amended, 15 U.S.C. 77j.

2. By revising § 230.144 paragraph (a)(3) to read as follows:

§ 230.144 Persons deemed not to be engaged in a distribution and therefore not underwriters.

* * * * *

(a) * * *

(3) The term "restricted securities" means:

(i) Securities that are acquired directly or indirectly from the issuer, or from an affiliate of the issuer, in a transaction or chain of transactions not involving any public offering; or

(ii) Securities acquired from the issuer that are subject to the resale limitations of Regulation D (§ 230.501 through § 230.506 of this chapter) or Rule 701(c) (§ 230.701(c) of this chapter) under the Act; or

(iii) Securities that are subject to the resale limitations of Regulation D and acquired in a transaction or chain of transactions not involving any public offering; or

(iv) Securities that are acquired in a transaction or chain of transactions meeting the requirements of Rule 144A (§ 230.144A of this chapter).

* * * * *

3. By further amending § 230.144 by revising paragraph (c)(2) as follows:

§ 230.144 [Amended]

* * * * *

(c) * * *

(2) *Other public information.* If the issuer is not subject to section 13 or 15(d) of the Securities Exchange Act of 1934, there is publicly available the information concerning the issuer specified in paragraphs (a)(5)(i) to (xiv), inclusive, and paragraph (a)(5)(xvi) of Rule 15c2-11 (§ 240.15c2-11 of this chapter) under that Act or, if the issuer is an insurance company, the information specified in section 12(g)(2)(G)(i) of that Act.

* * * * *

4. By further amending § 230.144 by revising paragraphs (d)(1) and (d)(2), removing paragraph (d)(3), redesignating paragraph (d)(4) as paragraph (d)(3), revising newly redesignated paragraphs (d)(3)(iv) through (d)(3)(vii), revising the note after (d)(3)(vii), and adding a new paragraph (d)(3)(viii) as follows:

§ 230.144 [Amended]

* * * * *

(d) * * *

(1) *General rule.* A minimum of two years must elapse between the later of the date of the acquisition of the securities from the issuer or from an affiliate of the issuer, and any resale of such securities in reliance on this section for the account of either the acquiror or any subsequent holder of those securities, and if the acquiror takes the securities by purchase, the two-year period shall not begin until the full purchase price or other consideration is paid or given by the person acquiring the securities from the issuer or from an affiliate of the issuer.

(2) *Promissory notes, other obligations or installment contracts.* Giving the issuer or affiliate of the issuer from whom the securities were purchased a promissory note or other obligation to pay the purchase price, or entering into an installment purchase contract with such seller, shall not be deemed full payment of the purchase price unless the promissory note, obligation or contract:

(3) * * *

(iv) *Pledged securities.* Securities which are bona-fide pledged by an affiliate of the issuer when sold by the pledgee, or by a purchaser, after a default in the obligation secured by the pledge, shall be deemed to have been acquired when they were acquired by the pledgor, except that if the securities were pledged without recourse they shall be deemed to have been acquired by the pledgee at the time of the pledge or by the purchaser at the time of purchase.

(v) *Gifts of securities.* Securities acquired from an affiliate of the issuer by gift shall be deemed to have been acquired by the donee when they were acquired by the donor.

(vi) *Trusts.* Where a trust settlor is an affiliate of the issuer, securities acquired from the settlor by the trust, or acquired from the trust by the beneficiaries thereof, shall be deemed to have been acquired when such securities were acquired by the settlor.

(vii) *Estates.* Where a deceased person was an affiliate of the issuer, securities held by the estate of such person or acquired from such estate by the beneficiaries thereof shall be deemed to have been acquired when they were acquired by the deceased person, except that no holding period is required if the estate is not an affiliate of the issuer or if the securities are sold by a beneficiary of the estate who is not such an affiliate.

Note: While there is no holding period or amount limitation for estates and beneficiaries thereof which are not affiliates of the issuer, paragraphs (c), (h) and (i) of the rule apply to securities sold by such persons in reliance upon the rule.

(viii) *Rule 145(a) transactions.* The holding period for securities acquired in a transaction specified in Rule 145(a) shall be deemed to commence on the date the securities were acquired by the purchaser in such transaction. This provision shall not apply, however, to a transaction effected solely for the purpose of forming a holding company.

* * * * *

5. By further amending § 230.144 to revise paragraph (k) as follows:

* * * * *

(k) *Termination of certain restrictions on sales of restricted securities by persons other than affiliates.* The requirements of paragraphs (c), (e), (f) and (h) of this rule shall not apply to restricted securities sold for the account of a person who is not an affiliate of the issuer at the time of the sale and has not been an affiliate during the preceding three months, provided a period of at least three years has elapsed since the later of the date the securities were acquired from the issuer or from an affiliate of the issuer. In computing the three-year period for purposes of this provision, reference should be made to paragraph (d) of this section.

6. By revising § 230.145(d) to read as follows:

§ 230.145 Reclassification of securities, mergers, consolidations and acquisitions of assets.

* * * * *

(d) *Resale provisions for persons and parties deemed underwriters.* Notwithstanding the provisions of paragraph (c), a person or party specified therein shall not be deemed to be engaged in a distribution and therefore not to be an underwriter of registered securities acquired in a transaction specified in paragraph (a) of this section if:

(1) Such securities are sold by such person or party in accordance with the provisions of paragraphs (c), (e), (f) and (g) of § 230.144;

(2) Such person or party is not an affiliate of the issuer, and a period of at least two years, as determined in accordance with paragraph (d) of § 230.144, has elapsed since the date the securities were acquired from the issuer in such transaction, and the issuer meets the requirements of paragraph (c) of § 230.144; or

(3) Such person or party is not, and has not been for at least three months, an affiliate of the issuer, and a period of at least three years, as determined in accordance with paragraph (d) of § 230.144, has elapsed since the date the securities were acquired from the issuer in such transaction.

7. By adding § 230.144A to read:

§ 230.144A. Private resales of securities to institutions.

Preliminary Notes

1. This section relates solely to the application of section 5 of the Act and not to antifraud or other provisions of the federal securities laws.

2. Attempted compliance with this section does not act as an exclusive election; any seller hereunder may also claim the availability of any other applicable exemption from the registration requirements of the Act.

3. In view of the objective of this section and the policies underlying the Act, this section is not available with respect to any transaction or series of transactions that, although in technical compliance with this section, is part of a plan or scheme to evade the registration provisions of the Act. In such cases, registration under the Act is required.

4. Nothing in this section obviates the need for any issuer or any other person to comply with the securities registration or broker-dealer registration requirements of the Securities Exchange Act of 1934 (the "Exchange Act"), whenever such requirements are applicable.

5. Nothing in this section obviates the need for any person to comply with any applicable state law relating to the offer or sale of securities.

6. Securities acquired in a transaction made pursuant to the provisions of this section are deemed to be "restricted securities" within the meaning of § 230.144(a)(3) of this chapter.

7. The fact that purchasers of securities from the issuer thereof may purchase such securities with a view to reselling such securities pursuant to this section will not affect the availability to such issuer of an exemption under section 4(2) of the Act, or Regulation D under the Act, from the registration requirements of the Act.

(a) *Definitions.*(1) For purposes of this section, "qualified institutional buyer" shall mean:

(i) Any of the following entities, acting for its own account or the accounts of other qualified institutional buyers, that in the aggregate owns and invests on a discretionary basis at least $100 million in securities of issuers that are not affiliated with the entity:

(A) Any *insurance company* as defined in section 2(13) of the Act;

(B) Any *investment company* registered under the Investment Company Act of 1940 (the "Investment Company Act") or any *business development company* as defined in section 2(a)(48) of that Act;

(C) Any *Small Business Investment Company* licensed by the U.S. Small Business Administration under section 301(c) or (d) of the Small Business Investment Act of 1958;

(D) Any *plan* established and maintained by a state, its political subdivisions, or any agency or instrumentality of a state or its political subdivisions, for the benefit of its employees;

(E) Any *employee benefit plan* within the meaning of title I of the Employee Retirement Income Security Act of 1974;

(F) Any *business development company* as defined in section 202(a)(22) of the Investment Advisers Act of 1940;

(G) Any organization described in section 501(c)(3) of the Internal Revenue Code, corporation (other than a bank as defined in section 3(a)(2) of the Act or a savings and loan association or other institution referenced in section 3(a)(5)(A) of the Act or a foreign bank or savings and loan association or equivalent institution), partnership, or Massachusetts or similar business trust; and

(H) Any *investment adviser* registered under the Investment Advisers Act.

(ii) Any *dealer* registered pursuant to section 15 of the Exchange Act, acting for its own account or the accounts of other qualified institutional buyers, that in the aggregate owns and invests on a discretionary basis at least $10 million of securities of issuers that are not affiliated with the dealer, *Provided,* That securities constituting the whole or a part of an unsold allotment to or subscription by a dealer as a participant in a public offering shall not be deemed to be owned by such dealer;

(iii) Any *dealer* registered pursuant to section 15 of the Exchange Act acting in a riskless principal transaction on behalf of a qualified institutional buyer;

Note: A registered dealer may act as agent, on a non-discretionary basis, in a transaction with a qualified institutional buyer without itself having to be a qualified institutional buyer.

(iv) Any investment company registered under the Investment Company Act, acting for its own account or for the accounts of other qualified institutional buyers, that is part of a family of investment companies which own in the aggregate at least $100 million in securities of issuers, other than issuers that are affiliated with the investment company or are part of such family of investment companies. "Family of investment companies" means any two or more investment companies registered under the Investment Company Act, except for a unit investment trust whose assets consist solely of shares of one or more registered investment companies, that have the same investment adviser (or, in the case of unit investment trusts, the same depositor), Provided That, for purposes of this section:

(A) Each series of a series company (as defined in Rule 18f-2 under the Investment Company Act [17 CFR 270.18f-2]) shall be deemed to be a separate investment company; and

(B) Investment companies shall be deemed to have the same adviser (or depositor) if their advisers (or depositors) are majority-owned subsidiaries of the same parent, or if one investment company's adviser (or depositor) is a majority-owned subsidiary of the other investment company's adviser (or depositor);

(v) Any entity, all of the equity owners of which are qualified institutional buyers, acting for its own account or the accounts of other qualified institutional buyers; and

(vi) Any *bank* as defined in section 3(a)(2) of the Act, any savings and loan association or other institution as referenced in section 3(a)(5)(A) of the Act, or any foreign bank or savings and loan association or equivalent institution, acting for its own account or the accounts of other qualified institutional buyers, that in the aggregate owns and invests on a discretionary basis at least $100 million in securities of issuers that are not affiliated with it and that has an audited net worth of at least $25 million as demonstrated in its latest annual financial statements, as of a date not more than 16 months preceding the date of sale under the Rule in the case of a U.S. bank or savings and loan association, and not more than 18 months preceding such date of sale for a foreign bank or savings and loan association or equivalent institution.

(2) In determining the aggregate amount of securities owned and invested on a discretionary basis by an entity, the following instruments and interests shall be excluded: securities issued or guaranteed by the United States or by any person controlled or supervised by and acting as an instrumentality of the Government of the United States pursuant to authority granted by the Congress of the United States; bank deposit notes and certificates of deposit; loan participations; repurchase agreements; securities owned but subject to a repurchase agreement; and currency, interest rate and commodity swaps.

(3) The aggregate value of securities owned and invested on a discretionary basis by an entity shall be the cost of such securities, except where the entity reports its securities holdings in its financial statements on the basis of their market value, and no current information with respect to the cost of those securities has been published. In the latter event, the securities may be valued at market for purposes of this section.

(4) In determining the aggregate amount of securities owned by an entity and invested on a discretionary basis, securities owned by subsidiaries of the entity that are consolidated with the entity in its financial statements prepared in accordance with generally accepted accounting principles may be included if the investments of such subsidiaries are managed under the direction of the entity, except that, unless the entity is a reporting company under section 13 or 15(d) of the Exchange Act, securities owned by such subsidiaries may not be included if the entity itself is a majority-owned subsidiary that would be included in the consolidated financial statements of another enterprise.

(5) For purposes of this section, "riskless principal transaction" means a transaction in which a dealer buys a security from any person and makes a simultaneous offsetting sale of such security to a qualified institutional buyer, including another dealer acting as riskless principal for a qualified institutional buyer.

(6) For purposes of this section, "effective conversion premium" means the amount, expressed as a percentage of the security's conversion value, by which the price at issuance of a convertible security exceeds its conversion value.

(7) For purposes of this section, "effective exercise premium" means the amount, expressed as a percentage of the warrant's exercise value, by which the sum of the price at issuance and the exercise price of a warrant exceeds its exercise value.

(b) *Sales by persons other than issuers or dealers.* Any person, other than the issuer or a dealer, who offers or sells securities in compliance with the conditions set forth in paragraph (d) of this section shall be deemed not to be engaged in a distribution of such securities and therefore not to be an underwriter of such securities within the meaning of sections 2(11) and 4(1) of the Act.

(c) *Sales by Dealers.* Any dealer who offers or sells securities in compliance with the conditions set forth in paragraph (d) of this section shall be deemed not to be a participant in a distribution of such securities within the meaning of section 4(3)(C) of the Act and not to be an underwriter of such securities within the meaning of section 2(11) of the Act, and such securities shall be deemed not to have been offered to the public within the meaning of section 4(3)(A) of the Act.

(d) *Conditions to be met.* To qualify for exemption under this section, an offer or sale must meet the following conditions:

(1) The securities are offered or sold only to a qualified institutional buyer or to an offeree or purchaser that the seller and any person acting on behalf of the seller reasonably believe is a qualified institutional buyer. In determining whether a prospective purchaser is a qualified institutional buyer, the seller and any person acting on its behalf shall be entitled to rely upon the following non-exclusive methods of establishing the prospective purchaser's ownership and discretionary investments of securities:

(i) The prospective purchaser's most recent publicly available financial statements, *Provided* That such statements present the information as of a date within 16 months preceding the date of sale of securities under this section in the case of a U.S. purchaser and within 18 months preceding such date of sale for a foreign purchaser;

(ii) The most recent publicly available information appearing in documents filed by the prospective purchaser with the Commission or another United States federal, state, or local governmental agency or self-regulatory organization, or with a foreign governmental agency or self-regulatory organization, *Provided* That any such information is as of a date within 16 months preceding the date of sale of securities under this section in the case of a U.S. purchaser and within 18 months preceding such date of sale for a foreign purchaser;

(iii) The most recent publicly available information appearing in a recognized securities manual, *Provided* That such information is as of a date within 16 months preceding the date of sale of securities under this section in the case of a U.S. purchaser and within 18 months preceding such date of sale for a foreign purchaser; or

(iv) A certification by the chief financial officer, a person fulfilling an equivalent function, or other executive officer of the purchaser, specifying the amount of securities owned and invested on a discretionary basis by the purchaser as of a specific date on or since the close of the purchaser's most recent fiscal year, or, in the case of a purchaser that is a member of a family of investment companies, a certification by an executive officer of the investment adviser specifying the amount of securities owned by the family of investment companies as of a specific date on or since the close of the purchaser's most recent fiscal year;

(2) The seller and any person acting on its behalf takes reasonable steps to ensure that the purchaser is aware that the seller may rely on the exemption from the provisions of section 5 of the Act provided by this section;

(3) The securities offered or sold:

(i) Were not, when issued, of the same class as securities listed on a national securities exchange registered under section 6 of the Exchange Act or quoted in a U.S. automated inter-dealer quotation system; *Provided*, That securities that are convertible or exchangeable into securities so listed or quoted at the time of issuance and that had an effective conversion premium of less than 10 percent, shall be treated as securities of the class into which they are convertible or exchangeable; and that warrants that may be exercised for securities so listed or quoted at the time of issuance, for a period of less than 3 years from the date of issuance, or that had an effective exercise premium of less than 10 percent, shall be treated as securities of the class to be issued upon exercise; and *Provided further*, That the Commission may from time to time, taking into account then-existing market practices, designate additional securities and classes of securities that will not be deemed of the same class as securities listed on a national securities exchange or quoted in a U.S. automated inter-dealer quotation system; and

(ii) Are not securities of an open-end investment company, unit investment trust or face-amount certificate company that is or is required to be registered under section 8 of the Investment Company Act; and

(4)(i) In the case of securities of an issuer that is neither subject to section 13 or 15(d) of the Exchange Act, nor exempt from reporting pursuant to Rule 12g3–2(b) (§ 240.12g3–2(b) of this chapter) under the Exchange Act, nor a foreign government as defined in Rule 405 (§ 230.405 of this chapter) eligible to register securities under Schedule B of the Act, the holder and a prospective purchaser designated by the holder have the right to obtain from the issuer, upon request of the holder, and the prospective purchaser has received from the issuer, the seller, or a person acting on either of their behalf, at or prior to the time of sale, upon such prospective purchaser's request to the holder or the issuer, the following information (which shall be reasonably current in relation to the date of resale under this section): a very brief statement of the nature of the business of the issuer and the products and services it offers; and the issuer's most recent balance sheet and profit and loss and retained earnings statements, and similar financial statements for such part of the two preceding fiscal years as the issuer has

been in operation (the financial statements should be audited to the extent reasonably available).

(ii) The requirement that the information be "reasonably current" will be presumed to be satisfied if:

(A) The balance sheet is as of a date less than 16 months before the date of resale, the statements of profit and loss and retained earnings are for the 12 months preceding the date of such balance sheet, and if such balance sheet is not as of a date less than 6 months before the date of resale, it shall be accompanied by additional statements of profit and loss and retained earnings for the period from the date of such balance sheet to a date less than 6 months before the date of resale; and

(B) The statement of the nature of the issuer's business and its products and services offered is as of a date within 12 months prior to the date of resale; or

(C) With regard to foreign private issuers, the required information meets the timing requirements of the issuer's home country or principal trading markets.

(e)Offers and sales of securities pursuant to this section shall be deemed not to affect the availability of any exemption or safe harbor relating to any previous or subsequent offer or sale of such securities by the issuer or any prior or subsequent holder thereof.

* * * * *

By the Commission.

Dated: April 23, 1990.

Jonathan G. Katz,

Secretary.

Editorial Note: The following appendix will not be published in the Code of Federal Regulations.

Appendix

Based upon data obtained from federal banking and savings and loan regulators, the following table sets forth the number of banks and savings and loans owning $100 million in securities at several net worth levels:

Net Worth (millions)	Banks with $100 Million Securities	Savings and Loan Associations With $100 Million in Securities
$150+	190	36
100 to 150	62	26
75 to 100	51	25
50 to 75	63	45
25 to 50	149	78
20 to 25	33	31
15 to 20	11	16
10 to 15	6	17
5 to 10	0	16
0 to 5	4	14
< 0	0	48

The above data is presented on a non-cumulative basis so that the number of banks falling into a given net worth category (*e.g.*, $100–$150 million) does not include banks falling into the other net worth categories (*e.g.*, $150 million +). The data on banks (FDIC-insured commercial banks and trust companies) was obtained from the FDIC and is as of March 31, 1989. It does not include FDIC-insured savings banks, of which there were 492 total as of March 31, 1989 (only 87 of which had $100 million or more in securities). This data is based upon consolidated financial statements which appear in call reports filed by the banks. The data on savings and loan associations was obtained from the Office of Thrift Supervision and is as of December 1989. This data is presented on an unconsolidated basis. At June 5, 1989, there were 12,971 FDIC-insured commercial banks and trust companies. As of December 1989, there were 2,513 SAIF-insured thrift institutions.

Separate Statement of Commissioner Fleischman

I write to dissent[86] solely from the adoption of paragraph (d)(4) of Rule 144A, both because its inclusion contradicts the justification and publicly-anticipated results of this lengthy rulemaking proceeding and because the adverse impact of its inclusion falls principally upon that class of business enterprises most needy of the benefits promised by the Rule and most capable of magnifying those benefits to the advantage of the entire American economy, namely the smaller domestic privately-owned issuers also known as "emerging growth companies."

I

Taken as a matter of Securities Act rulemaking, paragraph (d)(4) should have been deleted from the Rule for each of four substantial reasons:

(1) Securities Act theory,
(2) Marketplace intrusion,
(3) Liability creation, and
(4) Administrative law policy.

First, as to the theoretical grounding of the Rule, the context in which the Commission has acted today is the inter-institutional resale marketplace, limited by the Rule to buy-side institutions with more than $100,000,000 in securities owned or managed. In the Original Proposing Release,[87] the Commission characterized as "t]he key to the analysis of proposed Rule 144A" [88] the *Ralston Purina* [89] notion that "certain institutions can fend for themselves . . . ." [90] Consonant with that rationale, the tier of the originally-proposed rule directed at minimum-of- $100,000,000 institutions did "not require that buyers be provided with any information regarding the issuer of the securities sold"[91] but rather carried forward the traditional inter-institutional market practice that prospective institutional purchasers would determine for themselves whether they had extracted the information they needed for investment decisionmaking from the seller, the issuer or other sources.[92] To distrust the ability of these major institutions to make that determination, and to mandate the provision of individual-investor-type information in order to protect these institutions from their Commission-perceived frailty in the face of an informationless sales pitch, is to shred the very justification for the Rule.

Second, as to the marketplace impact of paragraph (d)(4), few securities held by institutions under governing instruments dated before today, although otherwise appropriate for the Rule 144A market, will carry the contractual right necessary to qualify for sale in the new market (unless the issuer of those securities grants such right in exchange for some needed waiver or concession from its institutional holders). As a result, without regard to whether any purchasing institution actually possesses all the information it desires, attempted resales of those securities will either abort in midstream or struggle forward in the paperwork-burdened pre-Rule 144A manner. In addition, the execution of transactions involving securities issued under governing instruments dated after today will in each case require an interruption until the purchaser has determined to abstain from requesting information or has made the request and has received the rule-mandated information; in any kind of quasi-impersonal Rule 144A market (in PORTAL, for example) no trade will be affirmable at a posted bid or offer price pending request for and receipt of that mandated information. While some of the practices ultimately developed may not differ substantially from the pattern found in many transactions in the pre-Rule 144A market, the allocation of functions and the procedures anticipated under paragraph (d)(4) must be contrasted both with the traditional market-determined allocation of those practices and with the deliberate market-oriented simplicity of paragraphs (d)(2) addressing purchaser awareness of the applicability of the Rule and (d)(1)(iii) addressing seller reliance on its own library materials. To impose a market-interrupting and market-excluding requirement is to undermine the fundamental thrust of the intended operation of the Rule.

[86] Even (or, perhaps, particularly) in partial dissent, I do wish to pay tribute to Edward Everett and Dey Watts, with whom I had the privilege of working in 1978–79 on the Position Paper of the Committee on Developments in Business Financing, Section of Corporation Banking and Business Law, American Bar Association, *Resale by Institutional Investors of Debt Securities Acquired in Private Placements*, 34 Bus. Law. 1927 (July 1979) ("ABA Position Paper") that prodded the Commission to consider the advantages to the financing markets of an institutional safe harbor rule.

[87] Securities Act Release No. 6806 (Oct. 25, 1988) [42 SEC Docket (CCH) 76] ("Original Proposing Release").

[88] *Id* at 91.

[89] *SEC* v. *Ralston Purina Co.*, 346 U.S. 119 (1953).

[90] Original Proposing Release at 91, quoting from 346 U.S. at 125.

[91] *Id.* at 94.

[92] *Cf.* ABA Position Paper at 1949–50.

Third, as to the effect on liability, paragraph (d)(4) seeks to utilize the vehicle of dated material heretofore used by broker/dealers to provide evidence of marketmakers' general familiarity with an issuer and its securities.[93] Under paragraph (d)(4) an issuer will be obliged to deliver such dated material to a prospective institutional purchaser of its securities upon request. The immediate result will be to provoke requests for the mandated material, for at worst it will be surplusage and it may sometimes buttress rights to recover any near-term loss; the secondary result will be to involve the issuer in the resale-and-purchase transaction to a far greater extent than the traditional issuer's role of merely reviewing the transaction for lawfulness prior to registration of transfer; and the ultimate result will be to render meaningless the dated character of the material required to be delivered, because issuers, sellers and purchasers will all assume up-dating to be obligatory upon the issuer under the antifraud provisions of the Securities Act [94] without even the safe-harbor protection confirmed just last year by the Commission to reporting companies in the performance of their management discussions and analyses.[95] It is the more strange that the Commission should have inserted this form of mandate since an alternative solution was easily at hand: in connection with its approval of the PORTAL rules today,[96] the Commission took note that a no-action letter from its Division of Market Regulation recognizes the legitimacy of delivery of dated material to broker/dealers, in the traditional Rule 15c2–11 fashion, concerning a class of issuers of PORTAL securities nearly coextensive with those issuers affected by paragraph (d)(4) of Rule 144A.[97] How easily that alternative could have been adapted for purposes of Rule 144A! To disregard the delivery pattern prevalent in all other Commission rules relating to transactions in securities of non-reporting companies, and to craft a requirement that necessarily ensnares issuers in a liability-pregnant status even if they follow the requirement to the letter, is to invite dilution of principles that extend far beyond the Rule.

Fourth, as to administrative law issues, at the open Commission meeting at which Rule 144A was revised and reproposed in a form limiting its applicability to the $100,000,000 institutions and requiring that issuer-oriented information be provided by the seller upon request, then-Commissioner Cox expressed concerns about the inconsistency between the institutional purchasers' presumed ability to fend for themselves, on the one hand, and the then-pending draft of a Commission-imposed information requirement, on the other, and about the inclusion of a specific provision in the revised rule as opposed to a request for further discussion in light of the limitations on the rule as reproposed. Administrative Procedure Act concerns and the possibility of "more thoughtful comment" were adduced to support inclusion of specific text for comment, and the response to Commissioner Cox was put on the basis that "[i]t really puts it to the commentators: look at this requirement and see * * * Do you think it's necessary * * * It's a fair point to put out in the proposed rule, to ask people when looking in the context of the whole theory of the rule * * * because it makes good policy sense * * *" [98] The then Commission majority's predilection nevertheless sounded clearly in the Reproposing Release:

> The Commission requests comment on whether the information condition should be deleted in its entirety, on the theory that qualified institutional buyers are sophisticated investors that are able to adequately assess their need for information and to determine when to proceed with an investment.[99]

In response, a large majority of the twenty-five commenters discussing this issue, comprised of a variety of market participants (including two commenters who had previously favored the opposite result) as well as bar associations, the American Society of Corporate Secretaries, the National Venture Capital Association, and the N.A.S.D., urged deletion of the provision.[100] A minority of commenters, consisting of one issuer, one insurance company, three investment-company-related entities, the Financial Analysts Federation and the New York Stock Exchange argued to the contrary, but, of those seven, two of the investment-company-related commenters took the position that, while there should be a requirement for providing information, the responsibility for fulfilling that requirement should in any event be placed somewhere other than on an institutional seller.[101] The staff had requested the opportunity to receive direct comment on specific text and the Commission had acceded; the commenters now have been heard, but have been disregarded. To jockey in public with the Administrative Procedure Act requirements applicable to informal rulemaking, and to lead concerned Commissioners and commenters alike to trust to the comment process, on the premise that few if any participants will remember or will be in a position to complain, is to hazard disdain for the entire process that produced the Rule.

Accredited investors, including institutions demonstrating five million dollars in total assets of any kind, may invest in primary private placements without any information at all—and the Commission's exemptive rules are not offended.[102] Individual investors, demonstrating no more assets than needed for the particular transaction, may purchase privately-placed securities without any information at all once those securities have been held by a non-issuer-affiliated placee, accredited or not, for three years after the placement—and the Commission's exemption rules are not offended.[103] But this Commission now requires qualified institutional buyers, demonstrating at least $100,000,000 in securities owned or managed, to be contractually entitled to receive 15c2–11-type information from non-public domestic issuers or the safe harbor rule will not encompass their sellers' participation in resale transactions in the securities of those issuers. How supremely inconsistent!

In my view this Commission abandons its statute, and loses the respect that its rules have long enjoyed, when it shreds the theoretical justification for its actions by adding requirements contradictory of the Commission's stated rulemaking rationale, *a fortiori* when those requirements inhibit the commonplace market practices for the exemption being granted or impose on issuers a liability risk regardless of compliance. And in my view this Commission breaks faith with its public when its A.P.A. and Sunshine Act processes are allowed to be employed to mollify concerned participants and prospective commenters and to convey an attitude of public responsiveness, in circumstances where agendas have been all but predetermined or where explanations are given and undertakings are made with the unspoken security that they do not persist in force beyond that session's adjournment.

II

Turning to its adverse impact on smaller domestic private companies, paragraph (d)(4) should have been stricken from the Rule as contrary to stated policies applicable to all agencies of the federal government,[104] to interests of American economic competitiveness, and to long-pursued Commission programs.[105] Specifically, the Commission is charged with the responsibility to "use its best efforts to * * * reduce the costs of raising capital in connection with the issuance of securities by firms whose aggregate outstanding securities and other indebtedness have a market value of $25,000,000 or less, * * * giving special attention to the effect of * * * proposed regulatory changes upon the small companies wishing to raise capital * * *" [106]

---

[93] *Cf.* Securities Exchange Act Rule 15c2–11(g) [17 CFR 240.15c2–11(g)] and Securities Act Rule 144(c)(2) [17 CFR 230.144(c)(2)].

[94] Securities Act sections 12(2) and 17(a) [15 U.S.C. 77*l*(2) and 77q(a)].

[95] Securities Act Release No. 6835 (May 18, 1989) [43 SEC Docket (CCH) 1330] at Part III.F.4.

[96] Securities Exchange Act Release No. — (April —, 1990) ("PORTAL Release").

[97] PORTAL Release at Part IV.C.1.

[98] Tape recording of S.E.C. public meeting held July 10, 1989, at tape 2, available from the Secretary of the Commission.

[99] Securities Act Release No. 6839 (July 11, 1989) [43 SEC Docket (CCH) 2027, at 2036] ("Reproposing Release").

[100] Comment letters in File No. S7–23–88.

[101] *Id.*

[102] Securities Act Rule 502(f)(1) [17 CFR 230.502(f)(1)].

[103] Securities Act Rule 144(k) [17 CFR 230.144(k)].

[104] "[T]he economic well-being [and] the security of this Nation * * * cannot be realized unless the actual and potential capacity of small business is encouraged and developed. It is the declared policy of the Congress that the Government should aid, counsel, assist, and protect, insofar as is possible, the interests of small-business concerns in order to preserve free competitive enterprise * * * and to maintain and strengthen the over-all economy of the Nation." 15 U.S.C. 631(a).

[105] *Cf.* Securities Act Regulation D [17 CFR 230.501 ff.], and Securities Act Rule 701 [17 CFR 230.701].

[106] 15 U.S.C. 80c–3(a).

As the Commission took pains to lay out in the Original Proposing Release, the inter-institutional secondary market for privately-placed securities "has become an established feature of American corporate finance," [107] and, while the core set of issuers for primary private placements "comprises mainly the larger but not giant corporations," [108] still a substantial portion of the debt securities and "usually" the equity securities sold in the institutional re-sale market are securities issued by non-reporting companies.[109] These are the companies to whose securities the new simplified Rule 144A resale market is substantially foreclosed by paragraph (d)(4), and, upon reflection, these are the companies similarly ill-treated by much of the action taken or blessed by this Commission today.

How does one classify these companies? Pejoratively, they may be described as a sub-class of the issuers of "junk bonds." They are, however, not the so-called "fallen angels" nor are they the mega-companies engaged in takeover or restructuring transactions.[110] Rather they are the start-up and the smaller private business ventures that have historically been, and still are believed to be, a prime source of innovation and competitiveness in the American economy.[111] It is that group, the emerging growth companies, that has traditionally obtained its long-term financing in the institutional private placement market, that has become even more dependent on that market today given the withdrawal of many providers of venture capital, and that has most needed the benefits (quicker pace, reduced cost, and greater facility of financing) promised by the new Rule through removal of the overhang of lawyer-intensive and paperwork-burdened resale transactions. It is that group of companies which this Commission today singles out in paragraph (d)(4) for imposition of its exclusionary requirements, despite the easy adaptability of a PORTAL-type delivery-to-broker/dealers alternative. It is the debt of that group of companies for which this Commission today accepts a 100% haircut in broker/dealer inventories, under an interpretive position that favors much of the Rule 144A-type of securities issued by larger domestic companies.[112] It is that group of companies whose securities issues, as well as the brokers interested in effecting transactions in those issues, will fall short of the practical and legal requirements approved by this Commission today for the PORTAL system.[113] It is that group of companies which, to the extent extra-U.S. markets are available at all, are welcome only in London's Euromarket and therefore which this Commission has today effectively excluded from the least restrictive category of Regulation S.[114] And it is that group of companies which, under paragraph (d)(4), to the extent they are not wholly excluded from the Rule 144A market, this Commission today forces to assume a liability risk that is qualitatively the more burdensome because almost any business event or trend, for good or for ill, at their level of development crosses the threshold of "materiality" under the federal securities laws.

This is not, as the Chairman suggested today in his colloquy with the Director of the Division of Corporation Finance, an issue of informational efficiency in the markets or of the rights of institutional securityholders; rather it concerns the Commission's fear that $100,000,000 institutions will not be able to continue to insist on pre-purchase evaluation of securities of domestic non-reporting companies without this Commission's assistance, and it concerns the rights of institutional prospectors in their status as possibly-interested buyers. In fact this may be above all, as the Chairman implicitly suggested today in his colloquy with the Director of the Division of Market Regulation, an issue of changed Commission priorities. For this Commission to ease the way for larger domestic business enterprises to fill their financing needs via major domestic investment banks and large-sized financial institutions, and for this Commission to widen the welcome for foreign issuers into American capital markets, is certainly praiseworthy. I find it unexplainable, however, that this Commission should act to accomplish those two goals by changing, to the benefit of larger and foreign companies but to the clear detriment of emerging domestic companies, the operation of a market that has long been crucial to the financing of those companies.

I fully concur in the Commission's actions today, at the Chairman's initiative, to help shield the American taxpayer from subsidizing the further losses of banking institutions of whatever size. Similarly I fully concur in the Commission's actions today, referred to by the Chairman in his introduction to the public meeting, to help draw foreign issuers into the American capital markets. But when this Commission at the same time directly and deliberately imposes a set of costly and insupportable preconditions on the financing capabilities of what are properly called emerging growth companies in the United States, I am astonished; I dissent; I reprehend.

[FR Doc. 90-9860 Filed 4-27-90; 8:45 am]

BILLING CODE 8010-01-M

[107] Original Proposing Release at 83.

[108] *Id.* at 80.

[109] *Id.* at 84.

[110] *Cf.* M.S. Fridson, *High Yield Bonds* 141 (1989), and Phillips, *High-Yield Securities*, 17th Annual Institute on Securities Regulation 71, 87 and 98 (1986).

[111] *Cf. 1987 State of Small Business: A Report of the President Transmitted to the Congress*, at viii (1988).

[112] Adopting Release at Part II.G.

[113] PORTAL Release at Part II.B.2.

[114] Securities Act Release No. 6863 (April 24, 1990).

17 CFR Part 241

[Release No. 34-27938]

Liquidation of Index Arbitrage Positions

AGENCY: Securities and Exchange Commission.

ACTION: Interpretation of rules.

SUMMARY: The Commission has authoryzed the issuance of a release setting forth the views of its staff on the application of Rules 3b-3 and 10a-1 under the Securities Exchange Act of 1934 to the liquidation of index arbitrage positions. The purpose of this release is to address certain recurring issues that have arisen relating to a previous staff no-action letter in this context.

FOR FURTHER INFORMATION CONTACT: Larry E. Bergmann or Blair Corkran, Division of Market Regulation, Securities and Exchange Commission, 450 Fifth Street NW., Washington, DC 20549, (202) 272-2848.

SUPPLEMENTARY INFORMATION: Rule 10a-1[1] under the Securities Exchange Act of 1934 ("Exchange Act")[2] provides that, subject to certain exceptions, short sales of securities covered by the Rule may be effected only (1) at a price above the price at which the immediately preceding sale was effected ("plus tick"), or (2) at the last sale price if it was higher than the last different price ("zero-plus tick").

While one of the purposes of Rule 10a-1 is to prevent manipulative short selling of securities, proof of manipulative intent is not necessary to establish a violation of the rule.[3] Pursuant to Rule 3b-3 under the Exchange Act,[4] a seller of an equity security subject to Rule 10a-1 must aggregate all positions in that security in order to determine whether the seller has a "net long position" in the security. Moreover, Rule 10a-1(c) [5] provides that

[1] 17 CFR 240.10a-1. Rule 10a-1 is sometimes called the "uptick" rule.

[2] 15 U.S.C. 78a *et seq.*

[3] Paragraph (a) of Rule 10a-1, 17 CFR 240.10a-1(a), regulates transactions in any security registered on, or admitted to unlisted trading privileges on, a national securities exchange ("listed securities"), if trades in such security are reported pursuant to an effective transaction reporting plan. Paragraph (b) of Rule 10a-1, 17 CFR 240.10a-1(b), covers transactions on a national securities exchange in securities that are not covered by paragraph (a).

[4] 17 CFR 240.3b-3.

[5] 17 CFR 240.10a-1(c).

all sell orders effected by a person on a national securities exchange must be marked either "long" or "short." Therefore, if a person does not have a net long position in a security, any sale of that security must be designated as a short sale and must comply with the "uptick" provisions of Rule 10a–1.

As part of its ongoing review and monitoring of developments affecting the securities markets, the Commission has been focussing on index arbitrage,[6] including the impact of the Commission's short sale regulation on that activity.[7] As discussed in the Market Break Report, the Division of Market Regulation ("Division") issued a letter in 1986 providing a narrow exception to the application of Rules 3b–3 and 10a–1 for certain liquidations of index arbitrage positions ("1986 Letter").[8] Specifically, the staff's interpretive position in the 1986 Letter permits the liquidation (or "unwinding") of certain existing index arbitrage positions involving long baskets of stock and short index futures or options without aggregating short stock positions in other proprietary accounts if those short stock positions are fully hedged. The Division took this position based on its view that the unwinding of an existing long index arbitrage position does not create a new short position, nor should any price decline resulting from the selling of the stock benefit the seller because its remaining positions are fully hedged.[9]

Since the time that the 1986 Letter was issued, the Division has become aware that market participants may be interpreting the no-action position to apply in contexts that were not contemplated by the Division.[10] Therefore, the Division believes that it is necessary and appropriate to clarify and emphasize certain aspects of the limited relief granted therein.

Specifically, as regards the no-action position (the "No-Action Position") set forth in the second paragraph under the heading "Response" of the 1986 Letter:

1. The No-Action Position does not apply to the creation of an index arbitrage position. The no-action position in the 1986 Letter is "strictly limited to the application of Rule 10a–1 to sales pursuant to 'unwinding' the index arbitrage positions described [therein]." Therefore, the position does not provide any relief from the "uptick" provisions of Rule 10a–1 (a) and (b) when securities are sold to establish a short stock-long futures or options index arbitrage position.

2. The No-Action Position applies only to the unwinding of an index arbitrage position that had been established in compliance with Rules 3b–3 and 10a–1 under the Exchange Act.

Accordingly, the position does not apply to the unwinding of an index arbitrage position that was established off-shore unless the holder of the index arbitrage long stock position purchased its securities from a seller that acted in compliance with Rules 3b–3 and 10a–1 or other comparable provision of foreign law. We also note in this connection that, to the extent that paragraph (e)(13) of Rule 10a–1 (the block positioner exception) may be applicable to the sale of securities in unwinding an index arbitrage position, the Division does not deem the exception to be available where the index arbitrage position had not been established in compliance with Rules 3b–3 and 10a–1.

3. The No-Action Position applies only where, in unwinding arbitrage position, action is taken to reverse both sides of the position as nearly simultaneously as practicable. In particular, although the 1986 Letter referred to a "concurrent" unwinding, it was not intended to cover any situation where an avoidable delay in reversing one side results in "legging-out" of the position.

4. The No-Action Position provides relief from the aggregation requirements of Rules 3b–3 only with respect to securities positions that are the subject of *bona fide* arbitrage, risk arbitrage, or *bona fide* hedge positions. *Cf.* Securities Exchange Act Release No. 15533 (January 29, 1979), 44 FR 6081.

Accordingly, where the seller seeks to unwind an index arbitrage position and has one or more short positions in the component securities of the index that are not the subject of *bona fide* arbitrage, risk arbitrage, or *bona fide* hedge positions, the seller must aggregate those short positions with the index arbitrage positions that it seeks to unwind. For purposes of this paragraph only, fully-hedged index arbitrage positions may be considered as "*bona fide* arbitrage" for aggregation purposes. Aggregation must be based on securities positions in all proprietary accounts as determined at least once each trading day.

Moreover, when selling securities from a proprietary account in a transaction not involving the unwinding of an index arbitrage position, the 1986 Letter does not provide any relief from the requirement to aggregate short positions established in index arbitrage transactions with such proprietary stock positions.

The Commission believes that publication of the Division's views in this release will assist market participants in understanding the limited scope of the no-action position. It also is important to note that the staff no-action position as expressed in the 1986 Letter and in this interpretive release is strictly limited to the application of Rules 10a–1 to sales in the course of liquidating the index arbitrage positions described above, and continues to be subject to modification or revocation if at any time the Commission or the Division determines that such action is necessary or appropriate in furtherance of the purposes of the Exchange Act.

By the Commission.

Dated: April 23, 1990.

Jonathan G. Katz,

Secretary.

December 17, 1986.

Andrew M. Klein, Esq.,
Schiff Hardin & Waite, 1101 Connecticut Avenue NW., Washington, DC 20036

Re: Merrill Lynch, Pierce, Fenner & Smith, Inc., File No. TP 87–19

Dear Mr. Klein: In your letters dated October 2, 1986, as supplemented by telephone conversations with the staff, you request on behalf of Merrill Lynch, Pierce, Fenner & Smith, Inc. ("Merrill Lynch") an exemption from, or alternatively, advice that this Division will not take enforcement action under, paragraphs (a) and (b) of Rule 10a–1 ("Rule") under the Securities Exchange Act of 1934 ("Exchange Act") insofar as the requirements of those paragraphs become applicable to sales of securities acquired by Merrill Lynch in the course of index arbitrage activities as described below.

You make the following representations:

Merrill Lynch engages in *bona fide* arbitrage and risk arbitrage as well as *bona fide* hedging on a regular basis. Arbitrage is undertaken to "lock in" a gross profit or spread resulting from a differential in the price between the instruments bought and sold existing at the time of the purchase and sale.

---

[6] Index arbitrage is the simultaneous purchase (or sale) of stocks that comprise or closely track a stock index and the sale (or purchase) of either futures or options on that particular index. Index arbitrageurs take advantage of spreads that periodically develop between equities, futures, and options markets by buying in the lowest-priced market and selling in the highest-priced market.

[7] *See The October 1987 Market Break*, Division of Market Regulation, Securities and Exchange Commission (1988) at 3–24 to 3–26 ("Market Break Report").

Rule 10a–1 contains a number of exceptions to permit certain types of trading activities that are believed to be beneficial to the markets or that carry little risk of the kind of manipulative or destabilizing trading that the Rule was designed to address. For instance, paragraphs (e)(7) and (e)(8) of the Rule, 17 CFR 240.10a–1 (e)(7) and (e)(8), exempt certain *bona fide* arbitrage transactions from compliance with the provisions of the Rule. Moreover, paragraph (e)(13) of the Rule, 17 CFR 240.10a–1(e)(13), allows a block positioner who is selling a security in that capacity to disregard, in determining whether it is long or short, a proprietary short position in that security to the extent that such short position is the subject of one or more offsetting positions created in the course of *bona fide* arbitrage, risk arbitrage or *bona fide* hedge activities. Index arbitrage involving the short sale of stocks against long futures positions is not within the terms of paragraphs (e)(7) and (e)(8) of the Rule, and, absent an exemption, is subject to the "tick" requirements of Rule 10a–1.

[8] *Letter regarding Merrill Lynch, Pierce, Fenner & Smith, Inc.* (December 17, 1986). The letter is reproduced at the end of this release.

[9] Market Break Report at 3–27.

[10] *See, e.g.*, Power, "'Uptick' Rule Exemption Ticks Off Program-Trade Foes," *Wall St. J.*, Nov. 16, 1989, at C1.

Index arbitrage involves the concurrent purchase (sale) of all stocks comprising a securities index, or a "basket" of such stocks consisting of a sufficient number of stocks comprising the index to closely track the day-to-day price movement of the index, and an offsetting transaction in a financial futures contract or a standardized option contract on that index. At a subsequent point in time, index arbitrage involves a concurrent "unwinding" transaction, which may consist either of a simple elimination of each long or short position at expiration of the futures or option contract, or earlier termination of both the stock positions and the futures or option contract position, before arbitrage profits can be realized.

In this regard, the "tick" test of Rule 10a-1 often impedes Merrill Lynch in "unwinding" index arbitrage positions assumed by the firm for its own account. The Rule operates in this manner whenever Merrill Lynch has engaged in other proprietary *bona fide* arbitrage, risk arbitrage, or *bona fide* hedging activities involving one or more stocks included in an index that is the object of an index arbitrage position held by Merrill Lynch. For example, if Merrill Lynch has sold short a stock included in such an index in the course of conducting *bona fide* arbitrage or establishing a *bona fide* hedge, and, at the same time, is maintaining an index arbitrage position involving a long position in that stock, the "unwinding" of the index arbitrage position may involve Merrill Lynch in short sales of that stock as defined in Rule 3b-3 under the Exchange Act. Pursuant to the "tick test" of Rule 10a-1, such short sales can only be effected on so-called "plus" or "zero plus" ticks.

Response:

Rule 3b-3 under the Exchange Act defines the term "short sale," and Rule 10a-1 governs short sales generally. These rules require a netting of security positions to determine whether a person is net short or long when effecting a sale of a security covered by Rule 10a-1. Paragraph (a)(1) of Rule 10a-1, among other things, prohibits short sales of any security registered on, or admitted to unlisted trading privileges on, a national securities exhange (i) below the price at which the last regular way sale of the security was reported; or (ii) at such price unless such price is above the next preceding different price at which a regular way sale of the security is reported. Paragraph (b) of Rule 10a-1 prohibits short sales on a national securities exchange of any security not covered by paragraph (a) of the Rule (1) below the price at which the last sale thereof, regular way, was effected on such exchange, or (2) at such price unless such price is above the next preceding different price at which a sale of such security, regular way, was effected on such exchange.

On the basis of your representations and the facts presented, this Division will not recommend that the Commission take enforcement action under paragraphs (a) and (b) of Rule 10a-1 insofar as the requirements of those paragraphs become applicable to sales of securities held by Merrill Lynch as a part of an index arbitrage position relating to a securities index that is the subject of a financial futures (or options on such futures) contract traded on a board of trade and/or a standardized options contract as defined in Rule 9b-1(a)(4) under the Exchange Act. Specifically, pursuant to this no-action position, Merrill Lynch may sell stock without regard to paragraphs (a) and (b) of Rule 10a-1 if:

(1) the firm has a "long" stock position as part of an index arbitrage position as described above;

(2) the stock is being sold in the course of "unwinding" an index arbitrage position as described above; and

(3) the sale would be deemed to be a short sale as defined in Rule 3b-3 solely as a result of the netting of the index arbitrage long position with one or more short positions created in the course of *bona fide* arbitrage, risk arbitrage, or *bona fide* hedge activities as those terms are employed in Securities Exchange Act Release No. 15533 (January 29, 1979).

The foregoing no-action position with respect to Rule 10a-1 is based solely on your representations and the facts that you have presented to the staff and is strictly limited to the application of Rule 10a-1 to sales pursuant to "unwinding" the index arbitrage positions described above. Such sales should be discontinued, pending presentation of the facts for our consideration, in the event that any material change occurs with respect to any of those facts or representations. The no-action position is subject to modification or revocation if at any time the Commission or the Division determines that such action is necesssary or appropriate in furtherance of the purposes of the Exchange Act. In addition, your attention is directed to the antifraud and anti-manipulation provisions of the Exchange Act, particularly sections 9(a) and 10(b) and Rule 10b-5 thereunder. Responsibility for compliance with these and any other applicable provisions of the federal or state securities laws must rest with Merrill Lynch. This Division expresses no view with respect to other questions that the proposed transactions may raise, including, but not limited to, the adequacy of disclosure concerning, and the applicability of any other federal or state laws to, the proposed transactions.

You have agreed to waive the provisions of the Commission's rule concerning publication of interpretive and no-action letters and other written communications (17 CFR 200.81), which provides for public availability of written communications requesting interpretive advice together with any response. Accordingly, your letters, dated October 2, 1986, and this letter shall be placed in the Commission's public file on December 17, 1986.

Sincerely,

Larry E. Bergman,

Assistant Director.

[FR Doc. 90-9906 Filed 4-27-90; 8:45 am]

BILLING CODE 8010-01-M

DEPARTMENT OF HEALTH AND HUMAN SERVICES

Food and Drug Administration

21 CFR Parts 510 and 558

Animal Drugs, Feeds, and Related Products; Tylosin

AGENCY: Food and Drug Administration, HHS.

ACTION: Final rule.

SUMMARY: The Food and Drug Administration (FDA) is amending the animal drug regulations to remove those portions reflecting approval of a new animal drug application (NADA) held by Vita Plus Corp. The NADA provides for use of a tylosin Type A medicated article to make a Type C medicated swine feed. In a notice published elsewhere in this issue of the Federal Register, FDA is withdrawing approval of the NADA.

EFFECTIVE DATE: May 10, 1990.

FOR FURTHER INFORMATION CONTACT: Mohammad I. Sharar, Center for Veterinary Medicine (HFV-216), Food and Drug Administration, 5600 Fishers Lane, Rockville, MD 20857, 301-443-4093.

SUPPLEMENTARY INFORMATION: In a notice published elsewhere in this issue of the Federal Register, FDA is withdrawing approval of Vita Plus Corp.'s NADA 97-287, which provides for manufacture of a tylosin Type A medicated article. This document amends 21 CFR 510.600 (c)(1) and (2) and 558.625(b)(20) to reflect the withdrawal of the approval.

List of Subjects

21 CFR Part 510

Administrative practice and procedure, Animal drugs, Labeling, Reporting and recordkeeping requirements.

21 CFR Part 558

Animal drugs, Animal feeds.

Therefore, under the Federal Food, Drug, and Cosmetic Act and under authority delegated to the Commissioner of Food and Drugs and redelegated to the Center for Veterinary Medicine, 21 CFR parts 510 and 558 are amended as follows:

PART 510—NEW ANIMAL DRUGS

1. The authority citation for 21 CFR part 510 continues to read as follows:

Authority: Secs. 201, 301, 501, 502, 503, 512, 701, 706 of the Federal Food, Drug, and

Cosmetic Act (21 U.S.C. 321, 331, 351, 352, 353, 360b, 371, 376).

§ 510.600 [Amended]

2. Section 510.600 *Names, addresses, and drug labeler codes of sponsors of approved applications* is amended in the table in paragraph (c)(1) by removing the entry "Vita Plus Corp.," and in the table in paragraph (c)(2) by removing the entry "033071".

PART 588—NEW ANIMAL DRUGS FOR USE IN ANIMAL FEEDS

3. The authority citation for 21 CFR part 558 continues to read as follows:

Authority: Secs. 512, 701 of the Federal Food, Drug, and Cosmetic Act (21 U.S.C. 360b, 371).

§ 558.625 [Amended]

4. Section 558.625 *Tylosin* is amended by removing and reserving paragraph (b)(20).

Dated: April 23, 1990.

Gerald B. Guest,

Director, Center for Veterinary Medicine.

[FR Doc. 90-9935 Filed 4-27-90; 8:45 am]

BILLING CODE 4160-01-M

DEPARTMENT OF TRANSPORTATION

Federal Highway Administration

23 CFR Part 658

RIN 2125-AC55

Truck Size and Weight; National Network

AGENCY: Federal Highway Administration (FHWA), DOT.

ACTION: Final rule; technical amendments.

SUMMARY: The FHWA, by this notice, corrects, clarifies and simplifies the description of federally-designated National Network routes for large commercial motor vehicles in all States as published in appendix A of 23 CFR part 658. Revised appendix A is being reprinted in its entirety as a comprehensive update that is intended to present an accurate and usable description of the federally-designated routes.

EFFECTIVE DATE: April 30, 1990.

FOR FURTHER INFORMATION CONTACT: Mr. Richard A. Torbik, Office of Planning (202) 366-0233, Mr. Philip W. Blow, Office of Motor Carrier Information Management and Analysis, (202) 366-4036, or Mr. David C. Oliver, Office of the Chief Counsel, (202) 366-1354, Federal Highway Administration, 400 Seventh Street, SW., Washington, DC 20590. Office hours are from 7:45 a.m. to 4:15 p.m., e.t., Monday through Friday, except legal holidays.

SUPPLEMENTARY INFORMATION:

Background

The National Network of highways in 50 States, the District of Columbia and Puerto Rico, on which large commercial motor vehicles authorized by the Surface Transportation Assistance Act of 1982 (STAA), Public Law 97-424, 96 Stat. 2097, may operate, was established by the final rule published in the **Federal Register** at 49 FR 23302, June 5, 1984. Federal amendments to the National Network are published in the **Federal Register** and codified in appendix A of 23 CFR part 658.

The FHWA publishes technical amendments from time to time in the interest of maintaining accuracy and clarity for users of appendix A.

General Revisions

The technical amendments reflected in this final rule clarify which routes on the National Network are federally-designated, identify States in which all Federal-aid primaries are available under State law to large commercial motor vehicles and simplify the format of appendix A as described below. The commercial motor vehicles covered (STAA-dimensioned vehicles) have the dimensions and configurations described in §§ 658.13 and 658.15 of 23 CFR part 658.

The amendments are based on extensive review and consultation with all the States and the respective FHWA field offices. Because of the volume of changes and the revision in format, revised appendix A is published in its entirety as a comprehensive update.

The revisions account for changes in Federal-aid system designations, route numbers, truck bypass routings, and previously published amendments for Oregon and Massachusetts occurring since the April 1 annual printing of 23 CFR. Obsolete and unnecessary information has been removed. Revised appendix A does not include the many miles of additional routes made available under State/local authority.

Format revisions include combining of contiguous route segments, grouping of numbered routes by prefix (Interstate business, U.S., State, local) and grouping named routes, listing same-number routes in geographic order, more uniform descriptions, and use of the standard two-letter State name abbreviations. Spelling and punctuation corrections have been made where necessary.

Listed Route Segment Removals

Routes not on the Federal-aid Primary (FAP) system are ineligible for Federal designation and have been removed, unless they are short sections that function as part of the FAP system as travelled ways for FAP routes under development or as urban truck bypasses, etc.

Routes that were not originally designated for STAA-dimensioned vehicles under Federal authority have been removed (e.g., Utah). A new footnote at the end of appendix A indicates that information on these and other State- or locally-designated routes is available from the respective State highway agencies. It is also available from commercial sources. The FHWA field offices periodically identify all routes that are known to be designated for STAA-dimensioned vehicles. A nonregulatory consolidated listing is then distributed to interested parties, including publishers of motor carrier atlases.

Routes that incorporated existing State restrictions on overall lengths of vehicles in Illinois have been removed. Overall length restrictions for conventional STAA-dimensioned tractor-trailer combinations on the National Network are prohibited by 23 CFR 658.13(b)(3).

Route Segment Clarifications

The descriptions of route segments now include U.S. route numbers and a terminus crossroad, when applicable, and a nearby community name for at least one of the termini. Where a terminus crossroad is identified, the community name serves only as an aid in locating the exact terminus intersection. Changes in a route description may reflect a change only in the route numbering for an existing road. On the other hand, a relocation of an FAP route to an improved facility may or may not have resulted in a change of the route description.

A number of States requested that we describe in detail the exact route of truck bypasses off the main route number. We show most of these as "(via Anytown Bypass)" or "(via ST 22 Anytown)" in lieu of describing each segment separately.

Exceptions to the general designation of all Interstate routes are described by footnotes in the appropriate State sections. These include segments that have been excepted or substantially restricted under 23 CFR part 658 from availability to all STAA-dimensioned vehicles. Information on the extent of

State restrictions for Interstate segments not on the network is also provided.

Conclusion

Revised appendix A is intended to present an accurate and usable description of federally-designated routes, as they legally exist today, that are available to all STAA-dimensioned commercial motor vehicles. In view of the many details involved, there may be errors and oversights that require further technical amendment. We request that suggested corrections be submitted to the State highway agency involved for forwarding to the FHWA Division Office in the State. Substantive changes that affect the routes, as corrected, or add routes may require State endorsement and Federal publication for notice and comment.

Regulatory Impact

The FHWA has determined that this document does not contain a major rule under Executive Order 12291 or significant regulation under the regulatory policies and procedures of the Department of Transportation. As these technical amendments are being issued only for the purpose fo clarifying existing federally-designated routes and removing ineligible routes, public comment is unnecessary. Notice and opportunity for comment are not required under the regulatory policies and procedures of the Department of Transportation, because it is not anticipated that such action could result in the receipt of useful information as the revisions incorporated in the regulation require no interpretation. Therefore, the FHWA finds good cause to make the revisions final without notice and opportunity for comment and without a 30-day delay in effective date under the Administrative Procedures Act. The regulatory impact analysis prepared for the June 5, 1984, final rule which initially designated the National Network is available for inspection in the Headquarters Office of the FHWA, 400 7th Street, SW., Washington, DC. Based on this analysis and under the criteria of the Regulatory Flexibility Act, the FHWA hereby certifies that this action will not have a significant economic impact on a substantial number of small entities.

Federalism

This action has been analyzed in accordance with the principles and policymaking criteria of Executive Order 12612, Federalism, of October 26, 1987, and it has been determined that this document does not have sufficient federalism implications to warrant the preparation of a Federalism Assessment. The final rule clarifies the locations of federally-designated routes and will expedite review of substantive issues raised by States.

A regulatory information number (RIN) is assigned to each regulatory action listed in the Unified Agenda of Federal Regulations. The Regulatory Information Service Center publishes the Unified Agenda in April and October of each year. The RIN number contained in the heading of this document can be used to cross reference this action with the Unified Agenda.

(Catalog of Federal Domestic Assistance Program Number 20.205, Highway Planning and Construction. The regulations implementing Executive Order 12372 regarding intergovernmental consultation on Federal programs and activities apply to this program.)

List of Subjects in 23 CFR Part 658

Grant programs—transportation, Highways and roads, Motor Carrier—size and weight.

Issued on: April 20, 1990.

T. D. Larson,

Administrator.

In consideration of the foregoing, the FHWA amends chapter 1 of title 23, Code of Federal Regulations, by revising appendix A to part 658 to read as set forth below.

PART 658—[AMENDED]

1. The authority citation for 23 CFR part 658 continues to read as follows:

Authority: Secs. 133, 411, 412, 413, and 416 of Pub. L. 97–424, 96 Stat. 2097 (23 U.S.C. 127; 49 U.S.C. app. 2311, 2312, 2313, and 2316), as amended by Pub. L. 98–17, 97 Stat. 59, and Pub. L. 98–554, 98 Stat. 2829; 23 U.S.C. 315; and 49 CFR 1.48.

Appendix A to Part 658 [Amended]

2. Appendix A to part 658 is revised to read as follows:

APPENDIX A—NATIONAL NETWORK—FEDERALLY-DESIGNATED ROUTES

[The federally-designated routes on the National Network consist of the Interstate System, except as noted, and the following additional Federal-aid Primary highways]

Route	From	To
Alabama		
US 43	I-65 N. of Mobile	Sunflower.
US 43	AL 5 near Russellville	TN State Line.
US 72	MS State Line	CR 33 Hollywood.
US 72 Alt	US 72 Tuscumbia	US 72/231/431 Huntsville.
US 78	End of 4-lane W. of AL 5 Jasper.	I-59 Birmingham.
US 80	AL 14 W. Int. Selma	US 82 Montgomery.
US 82	Coker W. of I-59	Eoline W. of AL 5.

APPENDIX A—NATIONAL NETWORK—FEDERALLY-DESIGNATED ROUTES—Continued

[The federally-designated routes on the National Network consist of the Interstate System, except as noted, and the following additional Federal-aid Primary highways]

Route	From	To
US 82	AL 206 Prattville	US 231 N. Int. Montgomery.
US 84	AL 92 E. of Daleville (via AL 210 Dothan Cir.).	End of 4-lane E. of Dothan.
US 98	I-10 Daphne	End of 4-lane near Fairhope.
US 231	FL State Line (via AL 210 Dothan Circle.).	End of 4-lane N. of Wetumpka.
US 231	Arab	TN State Line.
US 280	US 31 Mountain Brook	AL 22 Alexander City.
US 280	I-85 Opelika	GA State Line Phenix City.
US 431	AL 210 Dothan	AL 173 Headland.
US 431	I-20 Anniston	AL 79 N. Int. Columbus City (via I-59—AL 77 Gadsden).
US 431	CR 8 New Hope	TN State Line.
AL 21	US 31 Atmore	I-65 N. of Atmore.
AL 21	US 431 Anniston	Jacksonville.
AL 67	I-65 Priceville	US 72 Alt. W. of Decatur.
AL 79	I-59 Birmingham	Pinson.
AL 152	US 231 N. Int. Montgomery.	I-65 N. Int. Montgomery.
AL 210	Dothan Circle (Beltway).	
AL 248	US 84 Enterprise	Ft. Rucker.
AL 249	Ft. Rucker	US 231.
Alaska		
AK 1	Potter Weigh Station Anchorage.	AK 3 Palmer.
AK 2	AK 3 Fairbanks	Milepost 1412 Delta Junction.
AK 3	AK 1 Palmer	AK 2 Fairbanks.
Note: Routes added to the Interstate System under 23 U.S.C. 139(c) are included only to the extent designated above.		
Arizona		
US 60	I-10 Brenda	I-17 Phoenix.
US 60	AZ 87 Mesa	AZ 70 Globe.
US 60	AZ 260 E. Int. Show Low.	NM State Line.
US 64	US 160 Teec Nos Pos	NM State Line.
US 70	US 60 Globe	NM State Line.
US 80	AZ 92 Bisbee	NM State Line.
US 89	I-10 Tucson	US 60 Florence Junction.
US 89	AZ 69 Prescott	I-40 Ash Fork.
US 89	I-40 Flagstaff	UT State Line.
US 95	Mexican Border	I-8 Yuma.
US 160	US 89 Tuba City	NM State Line.
US 163	US 160 Kayenta	UT State Line.
US 666	I-10 Bowie	US 70 Safford.
US 666	US 60 Springerville	I-40 Sanders.
US 666	Mexican Border	US 80 Douglas.
AZ 69	US 89 Prescott	I-17 Cordes Junction.
AZ 77	US 60 Show Low	I-40 Holbrook.
AZ 84	I-10 Picacho	AZ 87 E. of Eloy.
AZ 85	I-8 Gila Bend (via I-8B).	I-10 Buckeye (via AZ 85 Spur).
AZ 87	AZ 84 E. of Eloy	AZ 387 W. of Coolidge.
AZ 87	AZ 587 Chandler	US 60 Mesa.
AZ 90	I-10 Benson	AZ 92 Sierra Vista.
AZ 169	AZ 69 Dewey	I-17 S. of Camp Verde.
AZ 189	Mexican Border	I-19 Nogales.
AZ 287	AZ 87 Coolidge	US 89 Florence.
AZ 360	I-10 Phoenix	AZ 87 Mesa.
AZ 387	I-10 Exit 195	AZ 87 W. of Coolidge.
AZ 587 (Old AZ 93).	I-10 Exit 175	AZ 87 Chandler

APPENDIX A—NATIONAL NETWORK—FEDERALLY-DESIGNATED ROUTES—Continued

[The federally-designated routes on the National Network consist of the Interstate System, except as noted, and the following additional Federal-aid Primary highways]

Route	From	To
Arkansas		
No additional routes have been federally designated; STAA-dimensioned commercial vehicles may legally operate on all Federal-aid Primary highways under State law.		
California		
I-80 Bus. Loop (US 50-CA 51).	I-80 W. Sacramento	I-80 near Watt Ave., Sacramento.
US 6	US 395 Bishop	NV State Line.
US 50	I-80 W. of Sacramento.	Sly Park Rd. Pollock Pines.
US 95	I-40 near Needles	NV State Line.
US 101	I-5 Los Angeles	I-80 San Francisco.
US 395	I-15 S. of Victorville	NV State Line.
CA 2	I-5	I-210 Los Angeles.
CA 10 (San Bern. Fwy.).	US 101	I-5 Los Angeles.
CA 14	I-5 near San Fernando.	US 395 Ridgecrest.
CA 15	I-5	I-805 San Diego.
CA 22	I-405 Seal Beach	CA 55 Orange.
CA 24	I-580 Oakland	I-680 Walnut Creek.
CA 52	I-5	I-805 San Diego.
CA 55	I-405 Costa Mesa	CA 91 Anaheim.
CA 57	I-5 Santa Ana	I-210 Pomona.
CA 58	CA 99 Bakersfield	I-15 Barstow.
CA 60	I-10 Los Angeles	I-10 Beaumont.
CA 71	I-210	CA 60 Pomona.
CA 78	I-5 Carlsbad	I-15 Escondido.
CA 85	I-280 near San Jose	CA 101 Mountain View.
CA 91	I-110 Los Angeles	I-215/CA 60 Riverside.
CA 92	I-280 San Mateo	I-880 Hayward.
CA 94	I-5	CA 125 San Diego.
CA 99	I-5 Wheeler Ridge	I-80 Bus. Loop/US 50 Sacramento.
CA 110	I-10	US 101 Los Angeles.
CA 118	I-405 Los Angeles	I-210 San Fernando.
CA 125	CA 94	I-8 La Mesa.
CA 133	I-405	I-5 near El Toro.
CA 134	US 101 Los Angeles	I-210 Pasadena.
CA 163	I-8	I-15 San Diego.
CA 170	US 101	I-5 Los Angeles.
CA 198	I-5 Coalinga	CA 99 Visalia.
CA 215	I-15 N. of Temecula	CA 60 Riverside.
CA 905 (Old CA 117).	I-5	I-805 San Diego.

Note 1: I-580 Richmond-San Rafael Bridge (Toll)—The bridge is not available for through truck traffic by STAA-dimensioned vehicles because the I-580 connection to I-80 on the east is not completed and US 101 on the west is not on the National Network.

Note 2: I-580 Oakland—All vehicles over 4½ tons (except passenger buses and stages) are prohibited on MacArthur Freeway between Grand Ave. and the north city limits of San Leandro. (Excepted under 23 CFR 658.11(f).)

Route	From	To
Colorado		
No additional routes have been federally designated; STAA-dimensioned commercial vehicles may legally operate on all Federal-aid Primary highways under State law.		
Connecticut		
CT 2	Columbus Blvd. Hartford.	I-395 Norwich.
CT 8	I-95 Bridgeport	US 44 Winsted.
CT 9	I-95 Old Saybrook	I-91 Cromwell.
CT 20	CT 401 Bradley Intl. Airport, Windsor Locks.	I-91 Windsor.
CT 401	CT 20 Windsor Locks	Bradley Intl. Airport Access Rd., Windsor Lks.

APPENDIX A—NATIONAL NETWORK—FEDERALLY-DESIGNATED ROUTES—Continued

[The federally-designated routes on the National Network consist of the Interstate System, except as noted, and the following additional Federal-aid Primary highways]

Route	From	To
Delaware		
US 13	MD State Line	I-495 S. Int. Wilmington.
US 40	MD State Line	I-295/US 13 Wilmington.
US 113	MD State Line	US 13 Dover.
US 301	MD State Line	I-295/US 13 Wilmington.
District of Columbia		
Anacostia Fwy/Ken. Ave.	I-295	MD State Line Cheverly MD

Note: I-66—There is a 24 hour total truck ban on the Theodore Roosevelt Memorial Bridge and its approaches. (Excepted under 23 CFR 658.11(f).)

Route	From	To
Florida		
US 27	FL Turnpike Ext.	FL 84 Andytown.
US 27	South Bay	I-75 Ocala.
US 301	SR 24 Waldo	I-10.
FL 24	SR 331 Gainesville	US 301 Waldo.
FL 85	FL 397 Valparaiso	I-10 near Crestview.
FL 202	I-95 Jacksonville	FL A-1-A.
FL 263	US 90 W. of Tallahassee.	I-10.
FL 331	I-75 S. of Gainesville	FL 24.
FL 397	Entrance Eglin AFB	FL 85 Valparaiso.
FL 528-FL 407.	I-4 Orlando	Cape Canaveral.
20th St. Expwy.	1-95 Jacksonville	Adams St. near Matthews Bridge.
FL Turnpike	S. End of Homestead Extension.	I-75 Wildwood.

Note: I-75—Alligator Alley/FL 84 (Toll) between Golden Gate and US 27 Andytown is a designated part of the Interstate System but is unsigned and not available until constructed to current Interstate standards.

Route	From	To
Georgia		
US 19	US 82 Albany	Near Pelham.
US 23/GA 365.	I-985 near Gainesville	US 441 near Cornelia.
US 25	I-16	N. of Statesboro.
US 27 Alt./GA 85.	I-185 Columbus	Ellerslie.
US 29	US 78 W. Int.	US 129/441 E. Int. Athens.
US 41	I-75 W. of Morrow	Near Barnsville.
US 76	I-75 Dalton	US 411 Chatsworth.
US 78-US 29.	GA 138 Monroe	US 29 W. Int. Athens.
US 78/GA 410.	Valleybrook Rd. Scottsdale.	GA 10 Stone Mountain.
US 82	Dawson	I-75 Tifton.
US 82	US 84 Waycross	I-95 Exit 6 Brunswick.
US 129	I-16	Gray.
US 129	GA 247C Warner Robins.	I-75 Macon.
US 280	AL State Line	Fort Benning.
US 411-US 41.	US 27 Rome	I-75 Near Emerson.
GA 2	US 27 Fort Oglethorpe	I-75.
GA 14 Spur	US 29/Welcome All Road.	I-85/285 S. Int. Atlanta.
GA 21	1-95 Monteith	GA 204 Savannah.
GA 25 Spur	US 17 N. of Brunswick Brunswick.	I-95 Exit 8.
GA 53	Rome	I-75 Calhoun.
GA 85	Fayetteville	I-75.
GA 138	I-20 Conyers	US 78 Monroe.
GA 300	US 82 Albany	I-75 near Cordele.
GA 316 (5 Mi).	I-85	Near Lawrenceville.
GA 400	I-285 near Atlanta	GA 60.

APPENDIX A—NATIONAL NETWORK—FEDERALLY-DESIGNATED ROUTES—Continued

[The federally-designated routes on the National Network consist of the Interstate System, except as noted, and the following additional Federal-aid Primary highways]

Route	From	To
Note: Atlanta area—Interstate highways within the I-285 beltway are not available to through trucks with more than 6 wheels because of construction.		
Hawaii		
HI 61	HI 98 (Vineyard Boulevard).	Kawainui Bridge Kailua.
HI 63	HI 92 (Nimitz Hwy.)	HI 83 (Kahekili Hwy.).
HI 64	Sand Island Park	HI 92 (Nimitz Hwy.).
HI 72	61 Kailua/Waimanalo Junction.	Ainakoa.
HI 78	H-1 Middle St.	HI 99 (Kamehameha Hwy.) Aiea.
HI 83	HI 99 Weed Junction	HI 61 (Kalanianaole Hwy).
HI 92	Pearl Harbor/Main Gate.	Kalakaua Avenue.
HI 93	Beginning of H-1	Makaha Bridge.
HI 95	H-1	Barbers Point Harbor.
HI 99	Pearl Harbor Int.	HI 83 Weed Junction.
Idaho		
I-15B	I-15/US 26 S. of Idaho Falls.	US 26 N. Int. Idaho Falls.
US 2	Dover	US 95 Sandpoint.
US 2	US 95 Bonners Ferry	MT State Line.
US 20/26	OR State Line	I-84 W. Caldwell Int. Caldwell
US 20	I-84 Mountain Home	MT State Line.
US 26	I-84 Bliss	I-15 Blackfoot.
US 30	US 95 Fruitland	ID 72 New Plymouth.
US 30	I-15 McCammon	WY State Line.
US 89	UT State Line	US 30 Montpelier.
US 91	UT State Line	I-15 Virginia.
US 93	NV State Line	Arco.
US 95	OR State Line S. of Marsing.	OR State Line Weiser (via US 95 Spur).
US 95	Grangeville	Moscow.
US 95	I-90 Coeur D'Alene	US 2 Bonners Ferry.
ID 16	ID 44 Star	Emmett.
ID 28	ID 33 Mud Lake	US 93 Salmon.
ID 33	ID 28 Mud Lake	US 20 Rexburg
ID 44	I-84 Caldwe1l	ID 55 Eagle.
ID 51	NV State Line	I-84 Mountain Home.
ID 53	WA State Line	US 95 Garwood.
ID 55	US 95 Marsing	I-84 Nampa.
ID 55	US 20/26 S. of Eagle	ID 44 Eagle.
ID 75	US 93 Shoshone	Ketchum.
ID 87	US 20 N. of Macks Inn.	MT State Line.
Illinois		
US 20	US 20 BR W. of Rockford.	I-39 Rockford.
US 36	IL 100 NW. of Winchester.	I-55 Springfield.
US 50	US 50 BR E. of Lawrenceville.	IN State Line.
US 51	US 51 BR S. of Decatur.	I-72 Decatur.
US 67	IL 92 Rock Island	IA State Line.
IL 6	I-74/474 Peoria	IL 88 N. of Peoria.
IL 53	Army Trail Rd. Addison.	IL 68 Arlington Heights.
IL 92	I-280 Rock Island	US 67 Rock Island.
IL 336	IL 57 Fall Creek	US 24 NE. of Quincy.
IL 394	IL 1 Goodenow	I-80/94/294 S. Holland.
IL Toll Hwys	All Routes	

APPENDIX A—NATIONAL NETWORK—FEDERALLY-DESIGNATED ROUTES—Continued

[The federally-designated routes on the National Network consist of the Interstate System, except as noted, and the following additional Federal-aid Primary highways]

Route	From	To
Indiana		
No additional routes have been federally designated; STAA-dimensioned commercial vehicles may legally operate on all Federal-aid Primary highways under State law.		
Iowa		
US 6	NE State Line	I-80 Council Bluffs.
US 6	IA 48 Lewis	I-80 N. of Wilton.
US 6	IA 130 Davenport	I-74.
US 18	WCL Rock Valley	WI State Line.
US 20	I-29 Sioux City	IL State Line.
US 30	Missouri River Bridge (NE).	IL State Line Clinton.
US 34	Missouri River Bridge (NE).	IL State Line Burlington.
US 52	US 61 Dubuque	IA 386 N. Int. Sageville.
US 52	IA 3 Luxemburg	US 18 E. Int.
US 52	ECL Calmar	Burr Oak.
US 59	IA 2 Shenandoah	IA 184.
US 59	IA 92 Carson	US 6 N. Int.
US 59	IA 83 Avoca	US 30 Denison.
US 59	US 20 Holstein	IA 3.
US 59	IA 10 E. Int. W. of Sutherland.	US 18 Sanborn.
US 61	Des Moines River Bridge (MO) Keokuk.	WI State Line.
US 63	MO State Line	IA 146 New Sharon.
US 63	I-80 Melcom	NCL Chester.
US 65	US 34 N. Int. Lucas	IA 117/330.
US 65	US 30 Colo	Sheffield.
US 65	SCL Mason City	IA 105 Northwood.
US 67	IL State Line Davenport.	4.64 Miles N. of Clinton.
US 69	SCL Lamoni	I-35.
US 69	US 6/65 Des Moines	IA 105 Lake Mills.
US 71	MO State Line	IA 196 Ulmer.
US 71	US 20 Early	MN State Line.
US 75	I-29 N. Int. Sioux City	IA 9 E. Int.
US 77	NE State Line	I-29 Sioux City.
US 136	Des Moines River Bridge (MO).	Mississippi River Bridge Keokuk.
US 151	I-80 E. of Williamsburg.	US 61 S. Int.
US 169	SCL Arispe	IA 92 Winterset.
US 169	SCL Desoto	I-80.
US 169	US 6 Adel	IA 141 Perry.
US 169	US 30 Beaver	IA 3.
US 169	US 18 Algona	IA 9 W. Int. Swea City.
US 218	US 136 Keokuk	IA 92 Ainsworth.
US 218	IA 22 Riverside	IA 227.
IA 1	IA 16 N. Int	IA 78 W. Int. Richland.
IA 1	IA 92 N. Int	IA 22 Kalona.
IA 1	US 6/218 N. Int. Iowa City.	I-80 Iowa City.
IA 1	SCL Martelle	US 151.
IA 2	NE State Line	IA 25 W. of Mt. Ayr.
IA 2	Decatur Co. Line	Mississippi River Bridge (IL) Ft. Madison.
IA 3	SD State Line	IA 12 N. Int. Akron.
IA 3	US 75 Le Mars	IA 7.
IA 3	IA 17 E. Int. Goldfield	IA 13 W. Int.
IA 4	IA 3 Pocahontas	US 18 E. Int.
IA 4	SCL Wallingford	IA 9 Estherville.
IA 5	IA 2 Centerville	I-35.
IA 7	IA 3	US 71 N. Int. Storm Lake.
IA 7	Barnum	US 20 Fort Dodge.
IA 8	US 63 Traer	US 218.
IA 9	IA 60	IA 26 Lansing.
IA 10	US 59 E. Int	ECL Sutherland.
IA 12	US 20	NCL Sioux City.
IA 13	US 30 Bertram	US 52.
IA 14	IA 92/5	NCL Newton.
IA 14	US 30 Marshalitown	US 20 S. Int.
IA 15	US 18 Whittemore	IA 9 W. Int.
IA 16	NCL Eldon	IA 1 N. Int.
IA 16	Denmark	US 61 Wever.
IA 17	IA 141 Granger	IA 3 E. Int.
IA 21	SCL What Cheer	IA 412 Waterloo.
IA 22	WCL Wellman	IA 70 W. Int.
IA 23	US 63 Ottumwa	IA 137 Eddyville.
IA 25	IA 2	IA 92 Greenfield.
IA 25	IA 925 W. Int	IA 44 Guthrie Center.
IA 26	IA 9 Lansing	New Albin.
IA 28	IA 92	US 6 Des Moines.
IA 31	SCL Correctionville	US 59.
IA 37	WCL Earling	US 59.
IA 38	US 61 Muscatine	I-80.
IA 38	SCL Tipton	US 30 E. Int.
IA 39	US 59 Denison	Deloit.
IA 44	US 71 Hamlin	IA 141.
IA 46	IA 5	IA 163 Des Moines.
IA 48	US 59 Shenandoah	NCL Essex.
IA 48	US 34 Red Oak	US 6.
IA 49	SCL Lenox	US 34.
IA 51	US 18 Postville	IA 9.
IA 55	Seymour	IA 2.
IA 60	US 75 Lemars	MN State Line.
IA 62	US 61 Maquoketa	US 52 Bellevue.
IA 64	US 151 Anamosa	US 61.
IA 70	Columbus City	IA 22 W. Int.
IA 77	IA 92	Keota.
IA 78	IA 149	IA 249 Winfield.
IA 78	WCL Morning Sun	US 61.
IA 83	S. of Walnut	US 6 Atlantic.
IA 85	US 63 Montezuma	IA 21.
IA 86	US 71	IA 9 Montgomery.
IA 92	NE State Line	IA 48 Griswold.
IA 92	WCL Fontanelle	IA 1 N. Int.
IA 92	IA 1 S. Int	Cotter.
IA 93	WCL Sumner	IA 150 Fayette.
IA 94	I-380 Cedar Rapids	Palo.
IA 96	Gladbrook	US 63 Traer.
IA 99	Toolesboro	US 61 Wapello.
IA 100	IA 151 Cedar Rapids	I-380.
IA 103	US 218	US 61 Fort Madison.
IA 105	US 69 Lake Mills	US 218 St. Ansgar.
IA 107	SCL Thornton	US 18 Clear Lake.
IA 110	US 20	IA 7 Storm Lake.
IA 111	US 18 Britt	Woden.
IA 117	IA 163 Prairie City	US 65.
IA 127	IA 183 S. Int	US 30 Logan.
IA 130	US 61/67 Davenport	I-80.
IA 133	US 30	Nevada.
IA 136	ECL Delmar	WCL Lost Nation.
IA 136	SCL Worthington	US 52/IA 3 Luxemburg.
IA 137	IA 5 Albia	IA 23.
IA 141	I-29	US 30/59 Denison.
IA 141	WCL Manning	US 169.
IA 141	IA 210 Woodward	I-35 Urbandale.
IA 144	IA 141 Perry	US 30 Grand Junction.
IA 145	I-29	ECL Thurman.
IA 146	US 63 New Sharon	Dunbar.
IA 148	IA 2 Bedford	US 34.
IA 148	IA 951 Carbon	I-80.
IA 149	US 63	IA 78 Martinsburg.
IA 149	SCL Williamsburg	I-80.
IA 150	US 218 Vinton	IA 283.
IA 150	US 20	US 18 West Union.
IA 150 (Old)	I-380 Center Point	IA 150.
IA 157	US 63	Lime Springs.
IA 160	US 69/IA 415	I-35 Ankeny.
IA 163	US 65 Des Moines	IA 92 Oskaloosa.
IA 173	IA 83 Atlantic	I-80.
IA 175	NE State Line	ECL Onawa.
IA 175	US 71 S. Int	ECL Lake City.
IA 175	Gowrie	ECL Dayton.
IA 175	WCL Stratford	ECL Radcliffe.
IA 175	US 65 N. Int	US 63 Voorhies.
IA 181	Melcher-Dallas	IA 5/92.
IA 183	IA 127 N. Int	NCL Pisgah.
IA 184	WCL Randolph	US 59.
IA 192	I-29/80	I-29 Council Bluffs.
IA 196	US 71	US 20 Sac City.
IA 210	IA 141	NCL Woodward.
IA 210	IA 17 N. Int	ECL Slater.
IA 215	Union	IA 175 Eldora.
IA 221	I-35	Roland.
IA 227	US 218	Stacyville.
IA 244	I-80	IA 191 Neola.
IA 249	IA 78	Winfield.
IA 272	Elma	US 63.
IA 273	WCL Drakesville	US 63.
IA 276	US 71	IA 327 Orleans.
IA 279	US 30	Atkins.
IA 281	WCL Fairbank	IA 150.
IA 283	Brandon	IA 150.
IA 287	US 30	Newhall.
IA 300	Modale	I-29.
IA 316	IA 5 Pleasantville	NCL Runnells.
IA 330	US 65	US 30 Marshalltown.
IA 363	IA 101	Urbana.
IA 401	US 6	Johnston.
IA 405	Lone Tree	IA 22.
IA 406	US 34	US 61 Burlington.
IA 415	US 6 Des Moines	IA 160.
IA 927	IA 38 Wilton	I-280 Davenport.
IA 928	US 20/IA 17	US 20 Williams.
IA 930	US 30	Ames.
IA 939	IA 150 Independence	IA 187.
IA 964	IA 5/92	IA 975/14 Knoxville.
IA 967	US 20	Farley.
IA 975	IA 5/92	IA 964/14 Knoxville.
University Ave.	US 20 SW. of Cedar Falls.	US 218 Cedar Falls.
Kansas		
No additional routes have been federally designated; STAA-dimensioned commercial vehicles may legally operate on all Federal-aid Primary highways under State law.		
Kentucky		
I-471 Conn	US 27 Highland Heights.	I-275/471.
US 23	OH State Line Portsmouth OH.	US 119 N. of Pikeville.
US 23 Spur	US 119 Jenkins	VA State Line.
US 23	US 60/23 Ashland	OH State Line Coal Grove OH.
US 25	US 421 S. of Richmond.	KY 876 Richmond.
US 25	KY 418 S. of Lexington.	KY 4 Lexington.
US 25E	VA State Line Middlesboro.	I-75 N. of Corbin.
US 27	TN State Line S. of Whitley City.	OH State Line Newport (via KY 4 Lexington).
US 31W	I-65 near TN State Line.	KY 100 Franklin.
US 31W/68	W. Int. E. of Bowling Green.	KY 446.
US 31W	Western Ky. Pkwy. Elizabethtown (via US 31W Byp. Elizabethtown).	I-264 Louisville.
US 41	Pennyrile Pkwy. Nortonville.	Pennyrile Pkwy. Madisonville.
US 41	Pennyrile Pkwy. Henderson.	IN State Line Evansville IN.
US 41 Alt	TN State Line Fort Campbell.	Pennyrile Pkwy. Hopkinsville.
US 45	Jackson Purchase Pkwy. N. of Mayfield.	US 62 Paducah.
US 60	US 60 Byp. W. of Owensboro.	KY 69 Hawesville.
US 60	KY 144 Garrett	US 31W Ft. Knox.
US 60	US 421/KY 676 Frankfort.	KY 4 Lexington.
US 60	KY 180 Cannonsburg	US 23 Ashland.
US 60 Byp	US 60 W. of Owensboro.	US 60 E. of Owensboro.
US 62	US 45 Paducah	I-24 Reidland (via US 68).

APPENDIX A—NATIONAL NETWORK—FEDERALLY-DESIGNATED ROUTES—Continued

[The federally-designated routes on the National Network consist of the Interstate System, except as noted, and the following additional Federal-aid Primary highways]

Route	From	To
US 62	I-24 Calvert City	Western KY Pkwy. Eddyville.
US 68	I-24 E. of Cadiz	Green River Pkwy. Bowling Green.
US 68	US 27 Paris (via Paris Byp.).	OH State Line Maysville.
US 119	KY 15 Whitesburg	US 23 Jenkins.
US 119	US 25E S. of Pineville	US 421 Harlan.
US 119	US 23 N. of Pikeville	KY 1441 E. of Zebulon.
US 127	US 150 Danville (via Danville Byp.).	US 60 Frankfort (via Lawrenceburg Byp.).
US 150	US 31E Bardstown (via KY 245–US 62 Bardstown).	US 27 NCL Stanford (via Danville Byp.).
US 231	US 60 Byp. Owensboro.	IN State Line.
US 421	US 119 N. of Harlan	0.1 Mile S. of Harlan Appalachian Reg. Hosp.
US 421	US 60/KY 676 Frankfort.	Broadway RR. Bridge Frankfort.
US 421–KY 80.	Daniel Boone Pkwy	2nd St. Manchester.
US 431	US 60 Byp. Owensboro.	US 60 (4th St.) Owensboro.
US 460	I-64 N. of Mt. Sterling	KY 686 N. of Mt. Sterling.
US 460	Mountain Pkwy	US 23 Paintsville.
US 641	TN State Line Hazel	
KY 4	Entire Circle of Lexington.	KY 348 Benton.
KY 11	KY 3170 Lewisburg	US 62/68 Maysville.
KY 15	Mountain Pkwy. Campton.	US 119 Whitesburg.
KY 21	I-75 W. of Berea	US 25 Berea.
KY 55	Cumberland Pkwy. Columbia.	US 150 Springfield.
KY 61	PeytonsburgKY 90 Burkesville.	
KY 69	US 60 Hawesville	IN State Line.
KY 79	KY 1051 Brandenburg	IN State Line.
KY 80	US 27/Cumberland Pkwy. Somerset (via Somerset Byp.).	US 25 N. of London.
KY 80	KY 15/Daniel Boone Pkwy. Hazard.	US 23 Watergap.
KY 90	I-65 Cave City	Cumberland Pkwy. Glasgow (via US 31E Byp. Glasgow).
KY 90	KY 61 Burkesville	US 27 Burnside.
KY 114	US 460 E. of Salyersville.	US 23/460 Prestonsburg.
KY 118	Daniel Boone Pkwy	US 421/KY 80 NW. of Hyden.
KY 144	KY 448 S. of Brandenburg.	US 60.
KY 151	US 127 N. of Lawrenceburg.	I-64 Graefenburg.
KY 180	I-64 S. of Cannonsburg.	US 60 W. of Cannonsburg.
KY 192	I-75 S. of London	Daniel Boone Pkwy. E. of London.
KY 259	Western KY Pkwy	US 62 Leitchfield.
KY 281	US 41 Alt. Madisonville.	US 41.
KY 418	US 25 SE. of Lexington.	I-75 SE. of Lexington.
KY 446	US 31W NW. of Bowling Green.	I-65.
KY 448	KY 1051 Brandenburg	KY 144 S. of Brandenburg.
KY 555	US 150 Springfield	Blue Grass Pkwy.
KY 676	US 127 Frankfort	US 60/421 Frankfort.
KY 686	KY 11 S. of Mt. Sterling.	US 460 N. of Mt. Sterling.
KY 876	I-75 Richmond	US 25 Richmond.
KY 922	KY 4 Lexington	I-64/75 N. of Lexington.

APPENDIX A—NATIONAL NETWORK—FEDERALLY-DESIGNATED ROUTES—Continued

[The federally-designated routes on the National Network consist of the Interstate System, except as noted, and the following additional Federal-aid Primary highways]

Route	From	To
KY 1051	KY 448 S. of Brandenburg.	KY 79.
KY 1682	US 68 W. of Hopkinsville.	Pennyrile Pkwy.
KY 1958	KY 627 S. of Winchester.	I-64 Winchester.
Audubon Pkwy.	Pennyrile Pkwy. Henderson.	US 60 Byp. Owensboro.
Blue Grass Pkwy.	I-65 Elizabethtown	US 60 E. of Versailles.
Cumberland Pkwy.	I-65 S. of Park City	US 27/KY 80 Byp. Somerset.
Daniel Boone Pkwy.	US 25 N. of London	KY 15 N. of Hazard.
Green River Pkwy.	I-65 SE. of Bowling Green.	US 60 Byp. Owensboro.
Jackson Purchase Pkwy.	TN State Line US 51 Fulton.	I-24 Calvert City (via US 45 Byp. Mayfield).
Mountain Pkwy.	I-64 E. of Winchester	US 460 Salyersville.
Pennyrile Pkwy.	US 41A Hopkinsville	US 41 Nortonville.
Pennyrile Pkwy.	US 41 Madisonville	US 41 Henderson.
Western Kentucky Pkwy.	I-24 S. of Eddyville	US 31W Elizabethtown.

NOTE: I-75/71 Cincinnati area—Restrictions may be applied to through traffic with semitrailers and/or trailers on northbound I-75/71 from I-275 to the Ohio State Line because of construction.Through traffic is defined as trucks which do not have destinations within I-275 (Circle Freeway) nor within a two (2) mile arc paralleling I-275 on the northern side of I-275 in Ohio between U.S. 22 and U.S. 27.This note is valid through the year 1992.

Louisiana

No additional routes have been federally designated; STAA-dimensioned commercial vehicles may legally operate on all Federal-aid Primary highways under State law.

Maine

US 1	I-95 Brunswick	Old US 1 (Vicinity of Congress St.) Bath.
Scarboro Connector.	I-295 South Portland	US 1 Scarborough.
South Portland Spur.	I-95 South Portland	US 1 South Portland.

Maryland

US 13	VA State Line	DE State Line.
US 15	US 40/340 Frederick	MD 26 Frederick.
US 40	US 15/340 Frederick	I-70/270 Frederick.
US 48	WV State Line	I-70 Hancock.
US 50	MD 201/Kenilworth Ave. Cheverly.	US 13 Salisbury.
US 301	VA State Line	DE State Line.
US 340	MD 67 Weverton	US 15/40 Frederick.
MD 3	US 50/301 Bowie	I-695/MD 695 Glen Burnie.
MD 4	I-95 Forestville	US 301 Upper Marlboro.
MD 10	MD 648 Glen Burnie	MD 695 Glen Burnie.
MD 100	MD 3	MD 607 Jacobsville.
MD 201 (Kenilw. Ave.).	D.C. Line	US 50 Cheverly.
MD 295	I-695 Linthicum	I-95 Baltimore.
MD 695	I-695/MD 3 Glen Burnie.	I-95/695 Kenwood.
MD 702	Old Eastern Avenue	MD 695 Essex.

APPENDIX A—NATIONAL NETWORK—FEDERALLY-DESIGNATED ROUTES—Continued

[The federally-designated routes on the National Network consist of the Interstate System, except as noted, and the following additional Federal-aid Primary highways]

Route	From	To

Note: I-895 Baltimore—Widths over 96 inches and tandem trailers may be prohibited on the Harbor Tunnel Thruway because of construction.

Massachusetts

US 3	I-95 Burlington	NH State Line.
MA 2	I-190 Leominister	I-495 Littleton.
MA 24	I-195 Fall River	I-93 Randolph.
MA 140	I-195 New Bedford	MA 24 Taun

Note: I-93 Boston—Restrictions may be applied, when necessary, to portions of I-93 affected by reconstruction of the Central Artery (I-93) and construction of the Third Harbor Tunnel (I-90).

Michigan

I-75 Conn	US 24BR Pontiac	I-75.
US 2	WI State Line Ironwood.	WI State Line S. of Crystal Falls.
US 2	WI State Line Iron Mountain.	I-75 St. Ignace.
US 8	US 2 Norway	WI State Line.
US 10	Ludington	I-75 Bay City.
US 12	IN State Line	I-94 W. Jct. Ypsilanti.
US 23	OH State Line	I-75 Mackinaw City.
US 24	OH State Line	MI 15 Waterford.
US 24BR	US 24 S. of Pontiac	MI 1 Pontiac.
US 27	IN State Line	I-75 S. of Grayling.
US 31	IN State Line	I-75 Mackinaw City.
US 33	IN State Line	US 12 Niles.
US 41	WI State Line	Houghton.
US 45	WI State Line	MI 26 Rockland.
US 127	OH State Line	I-69/US 27 N. of Lansing.
US 131	IN State Line	US 31 Petoskey.
US 141	WI State Line S. of Crystal Falls.	US 41/MI 28.
US 223	US 23	US 12/127 Somerset.
MI 10	I-375 Detroit	Orchard Lake Road.
MI 13	I-69 Lennon	I-75 Saginaw (via MI 81).
MI 13	I-75 Kawkawlin (via I-75 Conn.).	US 23 Standish.
MI 14	I-94 Ann Arbor	I-96/275 Plymouth.
MI 15	US 24 Clarkston	MI 25 Bay City.
MI 18	US 10	MI 61 Gladwin.
MI 20	US 31 New Era	MI 37 White Cloud.
MI 20	US 27 Mt. Pleasant	US 10 Midland.
MI 21	I-96 near Grand Rapids.	I-69 Flint.
MI 24	I-75 Auburn Hills (via I-75 Conn.).	I-69 Lapeer.
MI 24	MI 46	MI 81 Caro.
MI 26	US 45 Rockland	MI 38.
MI 27	I-75	US 23 Cheboygan.
MI 28	US 2 Wakefield	I-75.
MI 32	Hillman	Alpena.
MI 33	Mio	Fairview.
MI 35	US 2/41 Escanaba	US 2/41 Gladstone.
MI 36	US 127 Mason	Dansville.
MI 37	MI 55	US 31/MI 72 Traverse City.
MI 37	I-96 Grand Rapids	MI 46 Kent City.
MI 38	US 45 Ontonagon	US 41 Baraga.
MI 39	I-75 Lincoln Park	MI 10 Southfield.
MI 40	MI 89 Allegan	US 31BR/I-196BL Holland.
MI 43	MI 37 Hastings	US 127 Lansing.
MI 46	US 131 Howard City	MI 25 Port Sanilac.
MI 47	I-675 Saginaw (via MI 58).	US 10.
MI 50	MI 43/66 Woodbury	MI 99 Eaton Rapids.
MI 50	US 127 S. Jct	I-75 Monroe.
MI 51	US 12 Niles	I-94.
MI 52	OH State Line	US 12 Clinton.

APPENDIX A—NATIONAL NETWORK—FEDERALLY-DESIGNATED ROUTES—Continued

[The federally-designated routes on the National Network consist of the Interstate System, except as noted, and the following additional Federal-aid Primary highways]

Route	From	To
MI 52	I-96 Webberville	MI 46 W. of Saginaw.
MI 53	MI 3 Detroit	MI 25 Port Austin.
MI 55	US 31 Manistee	I-75.
MI 55	MI 65	US 23 Tawas City.
MI 57	US 131 N. of Rockford.	US 27.
MI 57	MI 52 Chesaning	I-75 Clio.
MI 59	US 24 BR Pontiac	I-94.
MI 60	MI 62 Cassopolis	I-69/US 27.
MI 61	MI 115	US 27 Harrison.
MI 61	MI 18 Gladwin	US 23 Standish.
MI 63	US 31 Scottdale	I-196.
MI 65	US 23 Omer	MI 55.
MI 65	MI 72 Curran	MI 32.
MI 65	Posen	US 23 N. of Posen.
MI 66	IN State Line	US 12 Sturgis.
MI 66	Battle Creek	MI 78.
MI 66	MI 43/50 Woodbury	MI 46 Edmore.
MI 67	US 41 Trenary	MI 94 Chatham.
MI 68	US 31/131 Petoskey	US 23 Rogers City.
MI 69	US 2/141 Crystal Falls.	MI 95 Sagola.
MI 72	US 31/MI 37 Traverse City.	US 23 Harrisville.
MI 77	US 2	MI 28 Seney.
MI 78	MI 66	I-69 Olivet.
MI 81	MI 24 Caro	MI 53.
MI 82	MI 37 S. Jct. Newago	US 131.
MI 83	Frankenmuth	I-75.
MI 84	I-75	MI 25 Bay City.
MI 89	MI 40 Allegan	US 131.
MI 94	US 41	MI 28 Munising.
MI 95	US 2 Iron Mountain	US 41/MI 28.
MI 104	US 31 Grand Haven	I-96.
MI 115	US 27	MI 22 Frankfort.
MI 117	US 2 Engadine	MI 28.
MI 123	I-75 N. of St. Ignace	MI 28.
MI 142	MI 25 Bay Port	MI 53.
MI 205	IN State Line	US 12 W. of Union.

Minnesota

US 2	ND State Line E. Grand Forks.	I-35 Duluth.
US 10	CH 11 E. of Moorhead	I-694 Arden Hills.
US 12	US 59 Holloway	I-94 Minneapolis.
US 14	US 75 Lake Benton	US 52 Rochester.
US 52	I-90 S. of Rochester	MN 110 Inver Grove Hts.
US 53	I-35/535 Duluth	US 169 S. Int. Virginia.
US 59	I-90 Worthington	MN 30 S. Int. Slayton.
US 59	MN 7 Appleton	US 12 Holloway.
US 59	I-94 N. Int. Fergus Falls.	MN 175 Lake Bronson.
US 61	WI State Line	MN 60 Wabasha.
US 61	MN 55 Hastings	I-94 St. Paul.
US 61	I-35 Duluth	CH 2 Two Harbors.
US 63	I-90 Rochester	US 52 Rochester.
US 63	MN 58 Red Wing	WI State Line.
US 71	IA State Line	MN 34 Park Rapids.
US 75	I-90	US 2 Crookston.
US 75	MN 175 Hallock	Canadian Border.
US 169	I-90 Blue Earth	US 212 Chanhassen.
US 169	I-94 Brooklyn Park	MN 23 Milaca.
US 169	US 2 Grand Rapids	US 53 S. Int. Virginia.
US 212	SD State Line	MN 62 Edina.
US 218	I-90 Austin	US 14 Owatonna.
MN 1	ND State Line	US 59/MN 32 Thief River Falls.
MN 3	MN 110 Inver Grove Hts.	I-94 St. Paul.
MN 5	MN 22 Gaylord	US 212.
MN 7	US 75 near Odessa	MN 100 St. Louis Park.
MN 9	US 12 Benson	US 59 Morris.
MN 11	MN 32 Greenbush	MN 72 Baudette.
MN 13	I-90	MN 14 Waseca.
MN 15	I-90 Fairmont	MN 60.
MN 15	US 14 New Ulm	MN 19 Winthrop.
MN 19	US 59 Marshall	MN 22 Gaylord.
MN 22	MN 109 Wells	US 14/MN 60 Mankato.
MN 22	US 212 Glencoe	US 12 Litchfield.
MN 23	US 75 Pipestone	I-35 near Hinckley.
MN 24	I-94 Clearwater	US 10 Clear Lake.
MN 25	I-94 Monticello	US 10 Big Lake.
MN 27	MN 29 Alexandria	MN 127 Osakis.
MN 27	US 71 N. Int. Long Prairie.	US 10 Little Falls.
MN 28	SD State Line Browns Valley.	I-94/US 71 Sauk Centre.
MN 29	I-94 Alexandria	MN 27 Alexandria.
MN 30	US 75 Pipestone	US 59 S. Int. Slayton.
MN 32	US 59/MN 1 Thief River Falls.	MN 11 Greenbush.
MN 33	I-35 Cloguet	US 53 Independence.
MN 34	US 71 Park Rapids	MN 371 Walker.
MN 36	I-35W Roseville	MN 95 Oak Park Hts.
MN 43	I-90 Wilson	US 61 Winona.
MN 55	MN 28 Glenwood	7th St. N., W. Int. Minneapolis.
MN 55	I-94 E. Int. Minneapolis.	MN 3 Inver Grove Hts.
MN 60	IA State Line Bigelow	US 14/169 Mankato.
MN 62	US 212 Edina	MN 100 Edina.
MN 65	I-694 Fridley	MN 23 Mora.
MN 68	US 75 Canby	MN 19 Marshall.
MN 101	I-94 Rogers	US 10 Elk River.
MN 109	I-90 Alden	MN 22 Wells.
MN 175	US 75 Hallock	US 59.
MN 210	ND State Line Breckenridge.	US 59 W. Int. Fergus Falls.
MN 210	US 10 Motley	I-35 Carlton.
MN 371	US 10 Little Falls	US 2 Cass Lake.

NOTE: I-35E St. Paul—The parkway segment of I-35E from 7th Street to I-94 is not available to trucks because of reduced design standards.

Mississippi

No additional routes have been federally designated; STAA-dimensioned commercial vehicles may legally operate on all Federal-aid Primary highways under State law.

Missouri

US 24	I-435 Kansas City	US 65 Waverly.
US 24	US 36 E. Jct. W. of Hannibal.	IL State Line.
US 36	KS State Line St. Joseph.	IL State Line Hannibal.
US 40	I-70 Wentzville	I-270 W. of St. Louis.
US 50	I-470 Exit 7 Kansas City.	I-44 Exit 247 Union.
US 54	US 54BR Lake Ozark	IL State Line.
US 59	KS State Line	I-229 St. Joseph.
US 60	OK State Line	US 71 Neosho.
US 60	MO 37 Monett	US 63 Cabool.
US 60	2 Mi. E. of E. Jct. MO 21 Ellsinore.	I-55/57 Sikeston.
US 61	I-70 Wentzville	IA State Line.
US 63	AR State Line Thayer	IA State Line.
US 65	AR State Line Ridgedale.	IA State Line.
US 67	AR State Line	I-55 Exit 174 Crystal City.
US 67	MO 367 N. of St. Louis.	IL State Line.
US 71	AR State Line	I-435/470 Kansas City.
US 71	I-29 Exit 53 N. of St. Joseph.	US 136 Maryville.
US 71 Alt	I-44 E. of Joplin	US 71 Carthage.
US 136	NE State Line	I-29 Exit 110 Rock Port.
US 166	KS State Line	I-44 SW. of Joplin.
US 169	I-29 Kansas City	MO 152 Kansas City.
US 412	AR State Line	I-55 Exit 19 Hayti.
MO 5	AR State Line	US 60 Mansfield.
MO 7	US 71 Harrisonville	MO 13 Clinton.
MO 13	I-44 Springfield	US 24 Lexington.
MO 25	US 412 near Kennett	US 60 Dexter.
MO 37	MO 76 Cassville	US 60 Monett.
MO 47	US 50 Union	MO 100 Washington.
MO 84	AR State Line	US 412 near Kennett.
MO 100	MO 47 Washington	I-44 SE. of Washington.
MO 171	KS State Line/KS 57	US 71 Webb City.
MO 367	I-270 N. of St. Louis	US 67 N. of St. Louis.

Montana

No additional routes have been federally designated; STAA-dimensioned commercial vehicles may legally operate on all Federal-aid Primary highways under State law.

Nebraska

No additional routes have been federally designated; STAA-dimensioned commercial vehicles may legally operate on all Federal-aid Primary highways under State law.

Nevada

No additional routes have been federally designated; STAA-dimensioned commercial vehicles may legally operate on all Federal-aid Primary highways under State law.

New Hampshire

US 3	MA State Line	NH 101A Nashua.
US 4/ Spaulding Tpk.	I-95 Portsmouth	Exit 6 E. of Durham.

New Jersey

US 130	US 322 Bridgeport	I-295 Logan Township.
US 130	I-295/NJ 44 West Deptford.	I-295 West Deptford.
US 322	PA State Line	US 130 Bridgeport.
NJ 42	Atlantic City Expwy. Turnersville.	I-295 Bellmawr.
NJ 81	I-95 Elizabeth	US 1/9 Newark Intl. Airport.
NJ 440	I-287/I-95 Edison	NY State Line Outerbridge Crossing.

Note: I-95—The following two sections of the New Jersey Turnpike are available to STAA-dimensioned vehicles. They were added to the Interstate System on March 3, 1983, but are not signed as Interstate.

PA Tpk. Connector.	PA State Line	Exit 6 Mansfield.
NJ Tpk	Exit 6 Mansfield	Exit 10 Edison.

New Mexico

US 56	I-25 Springer	OK State Line.
US 60	AZ State Line	I-25 Socorro.
US 62	US 285 Carlsbad	TX State Line.
US 64	AZ State Line	US 550 Farmington.
US 70	AZ State Line	I-10 Lordsburg.
US 70	I-10 Las Cruces	US 54 Tularosa.
US 70	US 285 Roswell	US 84 Clovis.
US 80	AZ State Line	I-10 Road Forks.
US 84	TX State Line Clovis	CO State Line.
US 87	US 56 Clayton	TX State Line.
US 160	AZ State Line (Four Corners).	CO State Line.
US 285	TX State Line S. of Carlsbad.	CO State Line.
US 550	US 64 Farmington	CO State Line.
US 666	I-40 Gallup	CO State Line.

New York

US 15	Presho Int	NY 17 Corning.
US 20	NY 75 Mt. Vernon	Howard Rd. Mt. Vernon.
US 219	NY 39 Springville	I-90 S. of Exit 55.
NY 5	NY 174 Camillus	NY 695 Fairmont.
NY 5	ECL Schenectady	I-87 Colonie.
NY 5	NY 179 Woodlawn Beach.	NY 75 Mt. Vernon.
NY 7	Schenectady/Albany Co. Line.	I-87 Colonie.

APPENDIX A—NATIONAL NETWORK—FEDERALLY-DESIGNATED ROUTES—Continued

[The federally-designated routes on the National Network consist of the Interstate System, except as noted, and the following additional Federal-aid Primary highways]

Route	From	To
NY 8	CR 9/Main St. Sauquoit.	I-790 Utica.
NY 12	I-790 Utica	Putnam Road Trenton.
NY 17	Exit 24 Allegany	I-87 Exit 16 Harriman.
NY 17	NJ State Line	I-87 Exit 15 Suffern.
NY 33	Michigan Ave. Buffalo	Greater Buffalo Intl. Airport.
NY 49	NY 365 Rome	NY 291 near Oriskany.
NY 104	Maplewood Dr. Rochester.	Monroe/Wayne Co. Line.
NY 179	NY 5 Woodlawn Beach.	I-90 Exit 56 Windom.
NY 198	I-190 Exit N11	NY 33 Buffalo.
NY 254	I-87 Glens Falls	0.3 Miles E. of US 9.
NY 365	I-90 Exit 33	NY 49 Rome.
NY 390	I-390/490 Rochester	NY 18 North Greece.
NY 400	I-90 Exit 54	NY 16 South Wales.
NY 481	I-81 North Syracuse	NY 3 Fulton.
NY 590	I-490/590 Rochester	NY 104 Irondequoit.
NY 690	I-90/690 Lakeland	NY 370 Baldwinsville.
NY 695	NY 5 Fairmont	I-690 Solvay.
Berkshire Conn. (NY 912M).	I-87 Exit 21A S. of Albany.	I-90 Exit B1.
Inner Loop (NY 940T).	I-490 W. Int. Rochester.	I-490 E. Int. Rochester.
Walden Avenue (NY 952Q).	I-90 Exit 52	NY 277 Cheektowaga.

North Carolina

Route	From	To
I-40 Conn	US 19/23/74 Clyde	I-40 W. of Clyde.
I-95 BR	I-95 S. of Fayetteville	I-95 N. of Fayetteville.
US 1	US 74 Rockingham	I-85 near Henderson.
US 15	US 401 Laurinburg	US 1 Aberdeen.
US 15	US 1 Northview	US 64 Pittsboro.
US 17	SC State Line	US 74/76 W. of Wilmington.
US 17	SR 1409 E. of Wilmington.	VA State Line.
US 19/US 23.	I-240 Asheville	N. Int. Mars Hill.
US 23	US 441 Franklin	US 74 Dillsboro.
US 25	SC State Line	I-26 East Flat Rock.
US 25/US 70.	US 19/23 Weaverville	US 25/70 Bypass Marshall.
US 29	US 52 Lexington	VA State Line.
US 52	NC 24/27 Albemarle	VA State Line.
US 64	I-40 Morganton	US 321 Lenoir.
US 64	US 29 Lexington	US 15 Pittsboro.
US 64	US 1/70/401 Raleigh	US 17 Williamston.
US 70	I-77 Statesville	I-85 Salisbury (via US 601).
US 70	I-85 Durham	US 70A W. of Smithfield.
US 70A	US 70 W. of Smithfield.	US 70 Princeton.
US 70	US 70A Princeton	Beaufort.
US 74	TN State Line	I-40 Conn. Clyde.
US 74	US 221 Rutherfordton	I-85 Kings Mountain.
US 74 (See Note Below).	I-277 Charlotte	US 17 W. Int. Wilmington.
US 76	US 17/74 W. Int. Wilmington.	SR 1409 E. of Wilmington.
US 158	I-40 Winston-Salem	US 29 Reidsville.
US 158	I-85 Henderson	US 258 Murfreesboro.
US 220	US 74 Rockingham	VA State Line.
US 221	US 74 Rutherfordton	I-40 Glenwood.
US 258	NC 24 N. Int. Richlands.	US 64 Tarboro.
US 258	US 158 Murfreesboro	VA State Line.
US 264	US 64 Zebulon	US 17 Washington.
US 301	I-95 Kenly	NC 4 Battleboro.
US 321	SC State Line	I-85 Gastonia.
US 321	I-40 Hickory	NC 18/90 Lenoir.

APPENDIX A—NATIONAL NETWORK—FEDERALLY-DESIGNATED ROUTES—Continued

[The federally-designated routes on the National Network consist of the Interstate System, except as noted, and the following additional Federal-aid Primary highways]

Route	From	To
US 401	SC State Line	I-40 Raleigh.
US 421	Carolina Beach	I-95 Dunn.
US 421	US 1 Sanford	US 64 Siler City.
US 421	I-40 Winston-Salem	Wilkesboro.
US 521	SC State Line	I-77 Charlotte.
US 601	SC State Line	US 74 Monroe.
NC 4	I-95 Gold Rock	US 301 Battleboro.
NC 11	US 70 Kinston	US 264 Greenville.
NC 24	US 74 Charlotte	US 52 Albemarle.
NC 24	NC 87 Spout Springs	I-95 Fayetteville.
NC 24	US 421 Clinton	US 70 Mansfield.
NC 49	I-85 Charlotte	US 64 Asheboro.
NC 87	NC 24/27 Spout Springs.	US 1 Sanford.
SR 1409	US 76 E. of Wilmington.	US 17.
SR 1728	I-40 W. of Raleigh	US 1/Wade Ave. Raleigh.
SR 1959-SR 2028.	US 70 Bethesda	I-40 S. of Durham.

Note: US 74 Charlotte—STAA-dimensioned vehicles are subject to State restrictions on US 74 in Charlotte because of narrow lane widths.

North Dakota

Route	From	To
US 2	MT State Line	MN State Line Grand Forks.
US 10	I-94 W. Fargo	MN State Line.
US 12	MT State Line Marmarth.	SD State Line.
US 52	I-94 Jamestown	Canadian Border.
US 81	I-29 Manvel	I-29 Joliette.
US 83	SD State Line	Canadian Border Westhope.
US 85	SD State Line	Canadian Border Fortuna.
US 281	SD State Line Ellendale.	Canadian Border.
ND 1	ND 11 Ludden	ND 13 S. Jct.
ND 5	MT State Line	US 85 Fortuna.
ND 11	US 281 Ellendale	ND 1 Ludden.
ND 13	ND 1 S. Jct	MN State Line.
ND 68	MT State Line	US 85 Alexander.
ND 200	MT State Line	US 85 Alexander.

Ohio

No additional routes have been federally designated; STAA-dimensioned commercial vehicles may legally operate on all Federal-aid Primary highways under State law.

Oklahoma

No additional routes have been federally designated; STAA-dimensioned commercial vehicles may legally operate on all Federal-aid Primary highways under State law.

Oregon

Route	From	To
US 20	OR 34 W. Int. Philomath.	ECL Sweet Home.
US 20	OR 126 Sisters	ID State Line Nyssa.
US 26	US 101 Cannon Beach Junction.	OR 126 Prineville.
US 30	US 101 Astoria	I-405 Portland.
US 30 BR	OR 201 Ontario	ID State Line.
US 95	NV State Line	ID State Line.
US 95 Spur	OR 201	ID State Line Weiser, ID.
US 97	CA State Line	WA State Line.
US 101	SCL Port Orford	OR 126 Florence.
US 101	US 20 Newport	OR 18 Otis.
US 101	OR 6 Tillamook	WA State Line.
US 197	I-84 The Dalles	WA State Line.
US 199	CA State Line	OR 99 Grants Pass.
US 395	CA State Line	US 26 John Day.
US 395	I-84 Stanfield	US 730 near Umatilla.
US 730	I-84 Boardman	WA State Line.
OR 6	US 101 Tillamook	US 26 Near Banks.
OR 8	OR 47 Forest Grove	OR 217 Beaverton.
OR 11	I-84 Pendelton	WA State Line.
OR 18	US 101 Otis	OR 99W Dayton.
OR 19	OR 206 Condon	I-84 Arlington.

APPENDIX A—NATIONAL NETWORK—FEDERALLY-DESIGNATED ROUTES—Continued

[The federally-designated routes on the National Network consist of the Interstate System, except as noted, and the following additional Federal-aid Primary highways]

Route	From	To
OR 22	OR 18 near Willamina	US 20 Santiam Junction.
OR 31	US 97 La Pine	US 395 Valley Falls.
OR 34	OR 99W Corvallis	US 20 Lebanon.
OR 35	US 26 Government Camp.	I-84 Hood River.
OR 38	US 101 Reedsport	I-5 Anlauf.
OR 39	CA State Line	OR 140 E. of Klamath Falls.
OR 42	US 101 Coos Bay	OR 42S Coquille.
OR 47	OR 8 Forest Grove	US 26 N. of Banks.
OR 58	I-5 Eugene	US 97 near Chemult.
OR 62	Medford	OR 140 White City.
OR 78	Burns	US 95 Burns Junction.
OR 99	I-5 E. of Rogue River	I-5 Grants Pass.
OR 99	I-5 Eugene	OR 99W/E Junction City.
OR 99E	OR 99/99W Junction City.	I-5 Albany.
OR 99E	I-5 Salem	I-5 Portland.
OR 99W	OR 99/99E Junction City.	I-5 Portland.
OR 126	US 101 Florence	US 26 Prineville.
OR 138	OR 38 Elkton	I-5 near Sutherlin.
OR 140	OR 62 White City	OR 39 E. of Klamath Falls.
OR 201	US 26 Cairo	US 95 Spur near Weiser, ID.
OR 207	US 730 Cold Springs Jct.	OR 74 S. Int. Heppner.
OR 212	OR 224 E. Int. near Rock Ck. Corner.	US 26 near Boring.
OR 214	I-5 Woodburn	OR 213 Silverton.
OR 217	US 26 Beaverton	I-5 Tigard.
OR 223	Kings Valley Hwy. in Dallas.	OR 99W Rickreall.
OR 224	OR 99E Milwaukie	OR 212 E. Int. near Rock Ck. Corner

Pennsylvania

Route	From	To
US 1	US 13 Morrisville	NJ State Line.
US 6	Conneaut Lake Borough.	End of 4-lane Bypass NE. of Meadville.
US 11	Turnpike Int. 16	US 15 Harrisburg.
US 13	US 1 Morrisville	Turnpike Int. 29.
US 15	Turnpike Int. 17	US 11 Harrisburg Expwy.
US 15	PA 642 West Milton	White Deer Int.
US 15	I-180/US 220 Williamsport.	End of lim. acc. Williamsport.
US 20	PA 89 North East	I-90 Int. 12.
US 22	WV State Line	I-79 Int. 15 Camegie.
US 22	I-78 Fogelsville	NJ State Line.
US 30	End of lim. acc. W. of Greensburg.	End of lim. acc. E. of Greensburg.
US 30	PA 462 W. of York	PA 462 E. of Lancaster.
US 119	End of lim. acc. S. of Uniontown.	US 30 Greensburg.
US 202	DE State Line	I-76 Int. 26 King of Prussia.
US 209	PA 33 Snydersville	I-80 Stroudsburg.
US 219	PA 601 N. of Somerset.	US 422 W. Int.
US 219	South Bradford Int	NY State Line.
US 220	Turnpike Int. 11	King.
US 220	End of lim. acc. Linden.	I-180/US 15 Williamsport.
US 220	PA 199 S. of Athens	NY State Line NY 17.
US 222	US 422 N. Int. Reading.	PA 61 S. of Tuckerton.
US 222	US 30 Lancaster	Turnpike Int. 21
US 322	NJ State Line (Comm. Barry Br.).	I-95 Chester
US 322	I-83/283	US 422/PA 39 Hershey.
US 422	US 322/PA 39 Hershey.	Hockersville Rd. Hershey.
US 422	US 422 Bus. Reiffton	US 422 Bus. Wyomissing.
PA 3	US 202	Garrett Rd. Upper Darby.

APPENDIX A—NATIONAL NETWORK—FEDERALLY-DESIGNATED ROUTES—Continued

[The federally-designated routes on the National Network consist of the Interstate System, except as noted, and the following additional Federal-aid Primary highways]

Route	From	To
PA 9	Turnpike Int. 25	I-81 Int. 53 N. of Scranton.
PA 28	PA 8	Creighton.
PA 33	US 22 Easton	I-80.
PA 42	I-80 Int. 34	US 11 Bloomsburg.
PA 51	US 119 Uniontown	Monongahela Riv. Elizabeth.
PA 54	I-80 Int. 33	US 11 Danville.
PA 60	PA 51 Beaver Falls	US 22.
PA 60–US 422.	I-80 Int. 1	1 Mile E. of PA 65 New Castle.
PA 61	US 222 S. of Tuckerton.	I-78 Int. 9.
PA 93	I-81 Int. 41	PA 924 Hazelton.
PA 114	US 11 Hogestown	I-81 Int. 18.
PA 132	I-95 Cornwells Heights.	Turnpike Int. 28 (via US 1 Connection).
PA 283	I-283 Int. 2	US 30 Lancaster.
PA 924	I-81 Int. 40	PA 93 Hazelton.
Airport Access (SR 3032).	PA 283	Harrisburg International Airport.
Harrisburg Exp. (Sr 2022).	US 11/15	I-83 Int. 20.
Reading Outer Loop (SR 3055).	PA 183 Leinbachs	US 222.

Puerto Rico

PR 1	PR 2 Ponce	PR 52 Ponce.
PR 2	PR 22 San Juan	PR 1 Ponce.
PR 3	N. Ent. Roosevelt Roads Naval Sta.	PR 26 Carolina.
PR 18	PR 52 San Juan	PR 22 San Juan.
PR 22	PR 26 San Juan	PR 165 Toa Baja.
PR 26	PR 22 San Juan	PR 3 Carolina.
PR 30	PR 52 Caguas	PR 3 Humacao.
PR 52	PR 1 Ponce	PR 18 San Juan.
PR 165	PR 22 Toa Baja	PR 2 Toa Baja.

Note: Routes added to the Interstate System under 23 U.S.C. 139(c) are included only to the extent designated above.

Rhode Island

RI 10	RI 195 Providence	I-95 Cranston.
RI 37	I-295 Cranston	I-95 near Lincoln Park.
RI 146	I-95 Providence	I-295 N. of Lime Rock.
RI 195	I-295 Johnston	RI 10 Providence.

South Carolina

US 15/401	NC State Line	US 52 Society Hill.
US 17	I-95 Pocotaligo	US 21 Gardens Corner.
US 17	I-26 Charleston	NC State Line.
US 21	US 17 Gardens Corner.	SC 170 Beaufort.
US 25	NC State Line	US 78 North Augusta (via Greenwood Bypass).
US 52	US 15/401 Society Hill.	End of 4-ln. div. N. of urban limits of Kingstree.
US 52	US 17 Alt. S. Int. Moncks Corner.	I-26 Exit 208 N. Charleston connector.
US 76	US 52 Florence	SC 576 Marion.
US 76	SC 277 Columbia	I-126 Columbia.
US 78	GA State Line	I-95 St. George.
US 78	I-26 Exit 205 N. Charleston.	US 52 N. Charleston.
US 123	Bibb St. Westminister	US 25 Greenville.
US 21/178 Bypass.	US 601 Orangeburg	Orangeburg.
US276	I-385 Simpsonville	I-85 Greenville.
US 301	US 321 Ulmer	I-95 Santee.
US 321	I-26 S. of Columbia	I-95 Hardeeville.
US 378	SC 262 Columbia	US 501 Conway.
US 501	SC 576 Marion	US 17 Myrtle Beach.

APPENDIX A—NATIONAL NETWORK—FEDERALLY-DESIGNATED ROUTES—Continued

[The federally-designated routes on the National Network consist of the Interstate System, except as noted, and the following additional Federal-aid Primary highways]

Route	From	To
US 601	NC State Line	SC 151 Pageland.
US 601	I-26 Jamison	US 21/178 Bypass Orangeburg.
SC 72	US 25 Byp. Greenwood.	I-77 Exit 61 (via SC 72 Byp.-US 21 BR-US 21 Rock Hill).
SC 121	SC 72 Whitmire	US 25 Trenton.
SC 151	US 601 Pageland	US 52 Darlington.
SC 277	I-77 Columbia	US 76 Columbia.
SC 576	US 76 Marion	US 501 Marion.

South Dakota

No additional routes have been federally designated; STAA-dimensioned commercial vehicles may legally operate on all Federal-aid Primary highways under State law.

Tennessee

US 25E	I-81	VA State Line Cumberland Gap.
US 27	End of I-124 Chattanooga.	US 127 Chattanooga.
US 27	TN 153 Chattanooga	KY State Line Winfield.
US 43	AL State Line St. Joseph.	US 64 Lawrenceburg.
US 45	MS State Line	US 45 Bypass S. Int. Jackson.
US 45 Bypass-US 45W.	US 45 S. Int. Jackson	US 51 Union City.
US 51	TN 300 Memphis	KY State Line Jackson Purchase Pkwy.
US 64	I-40 E. Int. Memphis	I-24 Monteagle.
US 70 Alt	US 79 Atwood	TN 22 Huntingdon.
US 70	TN 22 Huntingdon	TN 96 Dickson.
US 70	TN 155 Nashville	US 127 Crossville.
US 70S	TN 102 Smyrna	US 70/TN 111 Sparta.
US 72	AL State Line	I-24 Kimball.
US 74	I-75 Cleveland	NC State Line Isabella.
US 79	I-40 Memphis	KY State Line US 41 Guthrie.
US 127	US 27 Chattanooga	TN 27 W. Int.
US 127	TN 28 Dunlap	KY State Line Static.
US 231	AL State Line S. of Fayetteville.	KY State Line N. of Westmoreland.
US 412	I-40 Jackson	US 51 Dyersburg.
US 641	I-40 near Natchez Trace State Park.	KY State Line N. of Paris.
TN 96	US 70 Dickson	I-40 E. of Dickson.
TN 153	I-75 Chattanooga	US 27 Chattanooga.
TN 155	I-40 Nashville	I-65 N. of Nashville.
TN 300	I-40 Memphis	US 51 Memphis.

Texas

No additional routes have been federally designated; STAA-dimensioned commercial vehicles may legally operate on all Federal-aid Primary highways under State law.

Utah

No additional routes have been federally designated; STAA-dimensioned commercial vehicles may legally operate on all Federal-aid Primary highways under State law.

Vermont

US 4	NY State Line	ECL Rutland.
US 7	End of 4-lane divided hwy. Wallingford.	US 4 N. Int. Rutland.
VT 9	I-91 Int. 3 N. of Brattleboro.	NH State Line.

Virginia

US 11	I-81 Exit 53	0.16 Mi. N. of VA 645 Rockbridge Co.
US 11	US 220 Alt. N. Int	2.15 Mi. S. of VA 220 Alt. N. Int. Cloverdale

APPENDIX A—NATIONAL NETWORK—FEDERALLY-DESIGNATED ROUTES—Continued

[The federally-designated routes on the National Network consist of the Interstate System, except as noted, and the following additional Federal-aid Primary highways]

Route	From	To
US 11	VA 100 Dublin	VA 643 S. of Dublin.
US 11	1.52 Miles N. of VA 75.	US 19 N. Int. Abington.
US 13	MD State Line	I-64 Exit 79 Norfolk.
US 17	US 29 Opal	VA 2/US 17 BR New Post.
US 17	VA 134 York Co	I-64 Exit 62 Newport News.
US 17 BR/VA 2.	SCL Fredricksburg	US 17 New Post.
US 19	I-81 Exit 7 (via VA 140) Abingdon.	US 460 N. Int./VA 720 Bluefield.
US 23	TN State Line	US 58 Alt: Big Stone Gap.
US 23	0.33 Mi. N. of US 23 BR Norton.	KY State Line.
US 25E	TN State Line Cumberland Gap TN.	KY State Line.
US 29	NC State Line	I-66 Exit 11 Gainesville.
US 33	N. Carlton St. Harrisonburg.	US 340 Elkton.
US 33	I-295 Henrico Co	0.96 Mile W. of I-295 Hanover Co.
US 50	VA 259 Gore	VA 37 Frederick Co.
US 50	Apple Blossom Loop Rd. W. of I-81.	I-81 Exit 80 Winchester.
US 58	VA 721 W. of Martinsville.	US 220 BR N. Int. Martinsville.
US 58	S. Fairy St. Martinsville.	WCL Emporia.
US 58	0.6 Mile E. of ECL Emporia.	VA 35 S. Int. Courtland.
US 58	US 58 BR E. of Courtland.	US 13/I-264 Bowers Hill.
US 58 Alt	US 23 Norton	US 19 Hansonville.
US 58 Alt	0.40 Mile W. of US 11	I-81 Exit 8 Abingdon.
US 58 BR	VA 35 Courtland	US 58 E. of Courtland.
US 58	W. Int. VA 337/Claremont Ave.	US 460/St. Paul's Blvd. Norfolk.
US 60	0.03 Mile W. of VA 687 Chesterfield Co.	US 522 Powhatan.
US 220	NC State Line	I-581 Roanoke.
US 220	I-81 Exit 44	SCL Fincastle.
US 220 BR	US 220 S. Int	0.16 Mi. N. of VA 825 S. of Martinsville.
US 220 BR	US 58 N. Int. Martinsville.	US 220 N. Int. Bassett Forks.
US 250	US 340 E. Int. Delphine Avenue.	VA 254 Waynesboro.
US 250	I-81 Exit 57	VA 261 Statler Blvd. Staunton.
US 258	NC State Line	US 58 Franklin.
US 258	VA 10 Benns Church	VA 143 Jefferson Ave. Newport News.
US 301	VA 1250 S. of I-295	I-295 Hanover Co.
US 301	US 301 BR N. Int. Bowling Green.	MD State Line.
US 340/522	I-66 Exit 2 Front Royal.	2.85 Miles N. of I-66.
US 340	VA 7 Berryville	WV State Line.
US 360	US 58 South Boston	VA 150 Chesterfield Co.
US 360	I-64 Exit 44 Richmond	VA 627 Village.
US 460	VA 67 W. Int. Raven	US 19 Claypool Hill.
US 460	VA 720 Bluefield	WV State Line Bluefield.
US 460	WV State Line	I-81 Exit 37 Christiansburg.
US 460	I-581 Roanoke	0.06 Mile E. of VA 1512 Lynchburg.
US 460	US 29 Lynchburg	1 Mile W. of VA 24 Appomattox Co.
US 460	0.64 Mile E. of VA 707 Appomattox Co.	I-85 Exit 12 Petersburg.
US 460	I-95 Petersburg	US 58 Suffolk.
US 501	VA 360 S. Int. Halifax	US 58 South Boston.
US 522	0.60 Mile S. of US 50	US 50 Frederick Co.
US 522	VA 37 Frederick Co	1.07 Miles N. of VA 705 Cross Junction.
VA 3	US 1 Fredericksburg	VA 20 Wilderness.
VA 7	I-81 Exit 81 Winchester.	0.68 Mile W. of WCL Round Hill.
VA 10	VA 58 Suffolk	VA 666 Smithfield.

APPENDIX A—NATIONAL NETWORK—FEDERALLY-DESIGNATED ROUTES—Continued

[The federally-designated routes on the National Network consist of the Interstate System, except as noted, and the following additional Federal-aid Primary highways]

Route	From	To
VA 10	ECL Hopewell	0.37 Mile W. of W. Int. VA 156 Hopewell.
VA 10	US 1 Chesterfield Co	VA 827 W. of Hopewell.
VA 20	I-64 Exit 24	Carlton Rd. Charlottesville.
VA 30	I-95 Exit 40 Doswell	US 1.
VA 33	I-64 Exit 52	VA 30 E. Int. West Point.
VA 36	I-95 Petersburg	VA 156 Hopewell.
VA 37	I-81 Exit 79 S. of Winchester.	I-81 Exit 82 (via US 11) N. of Winchester.
VA 42	VA 257 S. Int. Bridgewater.	VA 290 Dayton.
VA 57	VA 753 Bassett	US 220 Bassett Forks.
VA 86	US 29 Danville	NC State Line.
VA 100	I-81 Exit 32	US 11 Dublin.
VA 105	US 60 Newport News	I-64 Exit 60.
VA 114	US 460 Christiansburg	0.09 Mile E. of VA 750 Montgomery Co.
VA 156	VA 10 W. Int. Hopewell.	VA 36 Hopewell.
VA 199	US 60 Williamsburg	I-64 Exit 57.
VA 207	I-95 Exit 41	0.20 Mile S. of VA 619 Milford.
VA 220 Alt	US 11 N. Int. N. of Cloverdale.	I-81 Exit 44/US 220.
VA 277	I-81 Exit 78 Stephens City.	1.60 Miles E. of I-81 Exit 78.
VA 419	I-81 Exit 41 Salem	Midland Ave. Salem.
VA 624	I-64 Exit 18	Old SCL Waynesboro.
Commonwealth Blvd.	Market St. Martinsville	N. Fairy St. Martinsville.

Note 1: I-66 Washington DC area—There is a 24 hour total truck ban on 1-66 from 1-495 Capital Beltway to the District of Columbia. (Excepted under 23 CFR 658.11(f).)

Note 2: I-264 Norfolk—Truck widths may be limited to 96 inches for the westbound tube of the Elizabeth River Downtown Tunnel from Norfolk to Portsmouth because of clearance deficiencies.

Washington

No additional routes have been federally designated; STAA-dimensioned commercial vehicles may legally operate on all Federal-aid Primary highways under State law.

West Virginia

US 19	I-77 Bradley	I-79 Gassaway.
US 35	WV 34 Winfield	OH State Line.
US 48	I-79 Morgantown	MD State Line.
US 50	I-77 Parkersburg	I-79 Clarksburg.
US 460	VA State Line Bluefield.	VA State Line Kelleysville.
WV 34	I-64 Putnam Co	US 35 Winfield.

Wisconsin

US 2	I-535/US 53 Superior	MI State Line Hurley.
US 2	MI State Line W. of Florence.	MI State Line E. of Florence.
US 8	US 63 Turtle Lake	MI State Line Norway MI.
US 10	US 53 Osseo	I-43 Manitowoc.
US 12	I-94/CH "EE" W. of Eau Claire.	US 53 Eau Claire.
US 12	I-90/94 Lake Delton	End of 4-lane S. of W. Baraboo.
US 12	WI 67 S. Jct. Elkhorn	IL State Line Genoa City.
US 14	US 51 N. of Janesville	I-90 Janesville.
US 14	WI 11/89 N. of Darien	I-43 Darien.
US 18	IA State Line Prairie Du Chien.	I-90 Madison.
US 41	National Ave. Milwaukee.	Garfield Ave. Milwaukee.
US 41	107th St. Milwaukee	MI State Line Marinette.
US 45	IL State Line Bristol	WI 28 Kewaskum.
US 45	WI 29 Wittenberg	MI State Line Land O'Lakes.
US 51	SCL Janesville	US 14 Janesville.
US 51	WI 78 N. of Portage	US 2 Hurley.
US 53	US 14/61 La Crosse	US 10 Osseo.
US 53	I-94 Eau Claire	I-535/US 2 Superior.
US 61	IA State Line Dubugue IA.	MN State Line La Crosse (via WI 129 Lancaster Byp.).
US 63	MN State Line Red Wing MN.	US 2 W. of Ashland.
US 141	US 41 Abrams	US 8 Pembine.
US 151	IA State Line Dubugue IA.	US 18 E. of Dodgeville.
US 151	I-90/94 Madison	US 41 Fond Du Lac.
WI 11	IA State Line Dubuque IA.	US 51 Janesville.
WI 11	I-90 Janesville	US 14/WI 89 N. of Darien.
WI 11	I-43 Elkhorn	WI 31 Racine.
WI 13	WI 21 Friendship	US 2 Ashland.
WI 16	WI 78 Portage	I-94 Waukesha.
WI 17	US 8 Rhinelander	US 45 Eagle River.
WI 20	I-94 Racine	WI 31 Racine.
WI 21	WI 27 Sparta	US 41 Oshkosh.
WI 23	WI 32 N. of Sheboygan Falls.	Taylor Dr. Sheboygan.
WI 26	I-94 Johnson Creek	WI 16 Watertown.
WI 26	US 151 Waupun	US 41 SW. of Oshkosh.
WI 27	US 14/61 Westby	US 10 Fairchild.
WI 28	US 41 Theresa	US 45 Kewaskum.
WI 29	I-94 Elk Mound	US 53 Chippewa Falls.
WI 29	WI 124 S. of Chippewa Falls.	US 41 Green Bay.
WI 30	US 151 Madison	I-90/94 Madison.
WI 31	WI 11 Racine	WI 20 Racine.
WI 32	WI 29 W. of Green Bay.	Gillett.
WI 34	WI 13 Wisconsin Rapids.	US 51 Knowlton.
WI 42	I-43 Manitowoc	WI 57 SW. of Sturgeon Bay.
WI 47	US 10 Appleton	WI 29 Bonduel.
WI 50	I-94 Kenosha	45th Ave. Kenosha.
WI 54	WI 13 Wisconsin Rapids.	US 51 Plover.
WI 57	I-43 Green Bay	Sturgeon Bay.
WI 69	WI 11 Monroe	CH "PB" Paoli.
WI 73	US 51 Plainfield	WI 54 Wisconsin Rapids.
WI 78	I-90/94 S. of Portage	US 51 N. of portage.
WI 80	WI 21 Necedah	WI 13 Pittsville.
WI 119	I-94 Milwaukee	WI 38 Milwaukee.
WI 124	US 53 N. of Eau Claire.	WI 29 S. of Chippewa Falls.
WI 139	US 8 Cavour, Forest Co.	Long Lake.
WI 145	Broadway Milwaukee	US 41/45 Milwaukee.
WI 172	US 41 Ashwaubenon	CH "x" S. of Green Bay.
CH "PB"	WI 69 Paoli	US 18/151 E. of Verona.

Wyoming

No additional routes have been federally designated; STAA-dimensioned commercial vehicles may legally operate on all Federal-aid Primary highways under State law.

Note: Information on additional highways on which STAA-dimensioned vehicles may legally operate may be obtained from the respective State highway agencies.

[FR Doc. 90-9928 Filed 4-27-90; 8:45 am]

BILLING CODE 4910-22-M

DEPARTMENT OF THE TREASURY

Bureau of Alcohol, Tobacco and Firearms

27 CFR Parts 4 and 12

[T.D. ATF-296; Ref: Notice Nos. 674, 662, 657, and 492]

RIN 1512-AA71

Foreign Nongeneric Names of Geographic Significance Used in the Designation of Wines (CII-881)

AGENCY: Bureau of Alcohol, Tobacco and Firearms (ATF), Department of the Treasury.

ACTION: Treasury decision, final rule.

SUMMARY: The Bureau of Alcohol, Tobacco and Firearms (ATF) is issuing this final rule to add a new part 12, entitled "Foreign Nongeneric Names of Geographic Significance Used in the Designation of Wines," to title 27 CFR. Subpart C of the new part 12 expands the examples of foreign names currently recognized under 27 CFR 4.24(c) as names of geographic significance which are not distinctive designations of specific wines and which may be used in the designation of only those wines of the origin indicated by such name. Subpart C lists examples of nongeneric names for 13 foreign countries.

In addition, this final rule recognizes 128 names from five foreign countries as nongeneric names which are also the distinctive designations of specific wines, as defined in § 4.24(c)(1). Many of these names have been recognized as distinctive in part 4 of the regulations since the 1930's. The foreign distinctive designations are listed in subpart D of the new part 12.

This Treasury decision is the result of two notices of proposed rulemaking concerning the recognition in the wine labeling regulations of foreign nongeneric designations, namely, Notice No. 492, dated November 8, 1983 (48 FR 51333), and Notice No. 657, dated April 12, 1988 (53 FR 12024). The nongeneric names listed in subpart C of part 12 are examples only and do not exhaustively state the names of geographic significance that may appear on wine labels.

EFFECTIVE DATE: May 30, 1990.

FOR FURTHER INFORMATION CONTACT: Gale Guinand, Alcohol Import-Export Branch, Bureau of Alcohol, Tobacco and Firearms, Ariel Rios Federal Building, 1200 Pennsylvania Avenue, NW., Washington, DC 20226 (202-789-3011).

SUPPLEMENTARY INFORMATION:

I. Background

Section 105(e) of the Federal Alcohol Administration Act (FAA Act), 27 U.S.C. 205(e), provides, in general terms, that wine labels shall not contain any statement that is false, deceptive, misleading, or likely to mislead the consumer regarding the product. In addition, section 105(e) authorizes the Secretary to prescribe such regulations as will provide the consumer with adequate information as to the identity and quality of the product.

Regulations implementing these provisions are set forth in 27 CFR part 4. Specific provision is made in § 4.24 concerning the use on wine labels of names of geographic significance which are used in the designation of a particular class and type of wine.

The general rule, as stated in § 4.24(c)(1), is that a name of geographic significance, which has not been found by the Director to be generic or semigeneric, may be used in the designation of only those wines of the origin indicated by such name. Examples of these "nongeneric" names ("Spanish," "Napa Valley"), are listed in § 4.24(c)(2).

"Generic" names are those specified in § 4.24(a) (such as "Vermouth"), which are no longer considered as having geographic significance but are indicative of a class or type of wine. A wine may be labeled with a generic designation regardless of the place of origin. "Semigeneric" designations (such as "Champagne," "Madeira," and "Sherry") are those names which retain some geographic significance but which are also known as the designation of a class or type of wine. Section 4.24(b) thus provides that semigeneric names may be used to designate wines of an origin other than that indicated by the particular geographic name, provided the designation is accompanied by an appellation of origin indicating the true origin of the wine.

In addition to the general rule set forth above which restricts the use of nongeneric names used to designate wines, § 4.24(c)(1) provides that the Director may find that certain of these nongeneric names are also the "distinctive" designations of specific wines. A name of geographic significance is deemed to be a distinctive designation if it is known to the U.S. consumer and trade as the designation of a specific wine of a particular place or region, distinguishable from all other wines. Section 4.24(c)(3) states that names such as "Chambertin," "Liebfraumilch," and "Lacryma Christi" are examples of distinctive designations.

II. Notice of Proposed Rulemaking

Section 4.24(c) lists only a few examples of nongeneric names. As a result, numerous foreign countries, including several Member States of the European Economic Community, have long sought more extensive recognition by ATF of names of geographic significance used in connection with their wine products.

In Notice No. 492, dated November 8, 1983 (48 FR 51333), ATF undertook to expand the examples of nongeneric wine designations currently listed under § 4.24(c). As indicated in that Notice, ATF desired to give official recognition, through publication, to those foreign nongeneric names which are also "distinctive" designations of specific wines, as defined in § 4.24(c)(1). To assist the Director in making this determination, ATF requested that national governments submit those designations which the respective governments restrict to their own wines, produced subject to specific national requirements and having characteristics which distinguish them from all other wines. In response to Notice No. 492, ATF received petitions from 13 countries: Argentina, Australia, Austria, France, the Federal Republic of Germany, Greece, Italy, New Zealand, Portugal, Romania, Spain, Switzerland, and Yugoslavia. Approximately 5,400 names were submitted for consideration.

On April 12, 1988, ATF published Notice No. 657 (53 FR 12024), which proposed to add a new part 12 to title 27, CFR to be entitled "Foreign Names of Geographic Significance Used in Connection with Wines." It was proposed that this new part 12 list not only those nongeneric names submitted for consideration by the 13 countries that ATF proposed to recognize as "distinctive" designations of specific wines pursuant to § 4.24(c)(1), but also all foreign names submitted by those countries which ATF deemed to be nongeneric. Thus, ATF proposed to list, by country, in subpart C of part 12, 2,113 nongeneric names *i.e.*, names which may be used in the designation of only those wines of the origin indicated by such names. Of these 2,113 names, 618 names were identified, by country, in subpart D of part 12 as nongeneric names which are also distinctive designations.

ATF explained in Notice No. 657 that it was rejecting for publication in the new part 12 those names submitted by the various national governments that were primarily commune and vineyard designations. In addition, varietal and color designations modifying a specific type of wine were also rejected where it appeared that any of several different varieties or colors were also authorized to modify the specific wine. ATF believed that these names were merely supplemental to the principal geographic names. In addition, ATF did not consider names (such as Champagne, Malaga, Port) that the Director had previously determined to be semigeneric under § 4.24(b)(2). Finally, foreign denominations of origin that were identical or similar to varietal designations recognized in the United States were generally not considered to be geographically significant and were excluded from consideration.

Notwithstanding the above, some varietal and color terms did appear in the new part 12 but only in connection with a principal name of geographic significance. As explained in Notice No. 657, ATF was proposing recognition of a foreign wine designation in its full context and was not suggesting that varietal or color terms standing alone be considered nongeneric.

In addition to incorporating a new part 12 as described above, Notice No. 657 proposed to amend 27 CFR 4.24(c)(2) and (c)(3) to make reference to subparts C and D, respectively, of part 12 and to increase the number of examples of geographic names listed in that subsection.

Finally, ATF had proposed to amend 27 CFR 4.39(i) to make reference to the new part 12. Pursuant to this section, a brand name of viticultural significance generally may not be used unless the wine meets the appellation of origin requirements for the geographic area named. Notice No. 657 proposed to recognize the 2,113 names listed in part 12 as "viticulturally significant" for purposes of § 4.39(i).

In issuing Notice No. 657, ATF indicated that it was specifically interested in obtaining comments concerning the potential for U.S. consumer confusion in the following instances: (1) When the foreign names submitted by various foreign countries are identical or similar to each other; (2) when the foreign names are identical or similar to the names of U.S. States, counties, or other appellations, or to U.S. trade and brand names; and, (3) when the foreign names are identical or similar to grape varietals recognized in the United States. ATF also requested comments concerning whether any of the names currently listed in § 4.24 as examples of nongeneric names should be deleted or whether any of the foreign names proposed for recognition as nongeneric had become semigeneric or generic.

The comment period for Notice No. 657 was scheduled to close on July 11, 1988, but was subsequently extended to October 11, 1988, by Notice No. 662 (53 FR 26448) and finally, until November 25, 1988, by Notice No. 674 (53 FR 40907).

III. Analysis of Comments

ATF received 39 comments in response to Notice No. 657. Nine (9) of the comments requested only that the original comment period set forth in the notice be extended. Below is a summary of the principal remaining comments.

A. Foreign Names of Geographic Significance

Most of the foreign commenters, including the Commission of the European Economic Community (EEC), expressed their general approval of ATF's proposal to publish foreign names of geographic significance which, in accordance with § 4.24(c)(1), may be used in the designation of only those wines of the origin indicated by such name. However, the EEC expressed the view that the proposed subdivision of names, as set forth in subparts C and D, respectively, was confusing. The EEC suggested instead that part 12 consist of a single list which would consist of the names, places, and regions which are the origin of the wines in question or of traditional names which have geographical significance.

In addition, several foreign commenters, such as the EEC, the Institute National des Appellations d'Origine des Vins et Eaux-de-Vie (INAO), and the Embassy of Spain objected to ATF's position with respect to names such as "Champagne" and "Sherry." These commenters requested that those names currently referenced in § 4.24(b) which have previously been determined by the Director to be semigeneric, be reclassified as nongeneric.

Most of the foreign commenters also requested recognition of other names not proposed for recognition in Notice No. 657. For example, several commenters, including the EEC, requested recognition of commune names in the new part 12. With respect to vineyards, one commenter requested that vineyard names be recognized as names of geographic significance in subpart 12, even if only via a system of incorporation with the principal geographic name. Another commenter agreed with the approach proposed by ATF in Notice No. 657, to exclude recognition of vineyard names, opining that vineyard names *per se* are generally not geographic designations of origin but are only a part of such designations.

Some commenters requested that foreign terms denoting methods of production (such as "Cava," a Spanish word referring to a method of producing sparkling wine), or levels of quality wine be recognized as nongeneric. Moreover, many of the foreign commenters requested the inclusion in the new part 12 of names not submitted to ATF during the official submission period.

With respect to the question raised in Notice No. 657 concerning foreign nongeneric names (such as Valdepenas and Frontignan), which are identical or similar to U.S. grape varietal names, several foreign commenters, such as the French Federation des Exportateurs de Vins et de Spiritueux (FEVS), as well as an American commenter, expressed the view that a country should not be precluded from using the names of a bona fide geographic area within its borders to denote a wine from that place simply because the name is also a grape varietal. One commenter felt that a name which was that of both a grape varietal and a geographic area should be permitted only as a geographic name since to do otherwise would mislead the consumer.

With respect to the question concerning the potential for confusion when a foreign name is identical or similar to a U.S. appellation or to another foreign name, one affected commenter, the Embassy of Australia, expressed the view that Australian wine labels bearing the names "Great Western" or "North Richmond" should not cause confusion if the product is clearly identified as a product of Australia.

Finally, several foreign commenters noted typographical errors and suggested other corrections to the names listed in Notice No. 567. Other commenters recommended the deletion of certain names on grounds that they were never or are no longer recognized as nongeneric designations by the country of origin. One commenter further requested that no foreign geographically significant name be permitted in wine labeling for any purpose unless such use were permitted by the wine's country of origin. Another commenter made the same request, but only with respect to nongeneric names that are distinctive designations.

In contrast to the above, commenters such as the Wine Institute, which represents 580 U.S. winery members, as well as several wine industry members, disapproved of the recognition of foreign nongeneric names as proposed. These commenters asserted that the names listed in Notice No. 657 are not significant and further requested that each foreign name be the subject of separate rulemaking. These commenters further noted that before ATF will recognize an American viticultural area, detailed information must be submitted, pursuant to § 4.25a(e)(2), to support the viticultural significance of the particular area in question. This being the case, they felt it was unreasonable to grant such recognition for foreign nongeneric names *en masse*.

The Wine Institute did agree with ATF's proposal not to consider commune or vineyard names submitted by foreign governments, but noted that such names were, in fact, listed in part 12 in certain instances. The Wine Institute also agreed that foreign geographic names that are also nongeneric, varietal, color, or quality and production terms should not be recognized as nongeneric, standing alone. However, the Wine Institute did take issue with ATF's proposal to recognize terms of this type when they appear in the full wine designation in connection with a principal name which *is* of geographic significance. In essence, the Wine Institute expressed the view that nongeneric terms should consist solely of names of geographic areas.

With respect to the specific questions raised in Notice No. 657, the Wine Institute, as well as several industry members, expressed concern that consumer confusion would arise when a name listed as nongeneric for one country was similar or identical to that listed for another, or when a name listed as a foreign nongeneric designation was similar or identical to a U.S. trade or brand name.

Finally, the Wine Institute and many of the domestic wine producers asserted that ATF was improperly proposing to allow foreign wine producers to "reserve" the use of wine terms.

B. Distinctive Designations

As indicated above, Notice No. 657 proposed to recognize in subpart D, of the new part 12, 618 nongeneric names as the "distinctive" designations of specific grape wines. The Wine Institute objected to the recognition of these names primarily on the ground that they were not "known to the U.S. consumer and trade" as the designations of specific wines of a particular place or region, as required by § 4.24(c)(1). The Wine Institute further expressed the view that, to the extent any of these foreign names would be recognized as distinctive designations, they should be required to be qualified by the word "wine," in a manner similar to that currently required by § 4.24(c)(4), to

assure that the consumer would not be confused.

On the other hand, several foreign commenters, including the INAO, expressed the view that the knowledge of the U.S. consumer and trade should not be a factor in determining whether a foreign nongeneric name is the distinctive designation of a specific wine.

IV. Final Rule

In Notice No. 657, ATF had proposed to list in subpart C of the new part 12, all names submitted by the petitioning countries that ATF deemed nongeneric. Moreover, to the extent a name listed in subpart C was proposed to be recognized as a "distinctive" designation, that name was again listed in subpart D of part 12.

Upon consideration of the comments, particularly those of the EEC and the Wine Institute, ATF agrees that the subdivision of foreign names as set forth in the notice was unclear and confusing. For purposes of this final rule, ATF believes that foreign nongeneric names should be listed in a new part 12 in a manner similar to that set forth for nongeneric names in the current § 4.24(c) (2) and (3).

Accordingly, this final rule amends title 27 CFR to add a new part 12 entitled "Foreign Nongeneric Names of Geographic Significance Used in the Designation of Wines." As more fully discussed below, subpart C of the new part 12 lists, in a manner similar to § 4.24(c)(2), only those examples of foreign nongeneric names which are *not* distinctive designations of specific wines. Subpart D of the new part 12 lists, in a manner similar to § 4.24(c)(3), only those foreign nongeneric names which are also distinctive designations of specific grape wines.

A. Nongeneric Names Which Are Not Distinctive Designations

Subpart C of the new part 12 expands upon the current § 4.24(c)(2) and lists additional examples of foreign names of geographic significance which may be used in the designation of only those wines of the origin indicated by such name. Contrary to the view of the Wine Institute, ATF believes there is no need to conduct rulemaking with respect to each name. Since a nongeneric term is defined in § 4.24(c)(1) as simply a "name of geographic significance," ATF believes that any name identified by a foreign government as a bonafide geographically demarcated area or as a name which is indicative of a wine product from such an area may be recognized as nongeneric for purposes of this section, provided it has not been determined to be generic or semigeneric.

Nevertheless, ATF has reconsidered its initial proposal to expressly list more than 2,000 foreign names as nongeneric in subpart C of the new part 12 and, instead, has determined to list only examples of nongeneric names for each of the petitioning countries.

It was not ATF's original intention to expand 27 CFR 4.24(c) with respect to all foreign nongeneric terms. When ATF issued Notice No. 492 to solicit nongeneric designations from the various national governments, ATF had proposed to expand only the list of foreign nongeneric names which the Director finds to be the distinctive designations of specific wines. However, in Notice No. 657 all names submitted by the 13 petitioning countries which ATF deemed to be nongeneric (whether distinctive or not) were proposed for publication. After review of the comments, ATF believes that the proposed listing of more than 2,000 nongeneric names was inherently confusing. ATF believes that an exhaustive listing of nongeneric names, limited to names from only those national governments that submitted petitions, gives the erroneous impression that only those names listed in the new part 12 are subject to restriction under § 4.24(c).

Since all nongeneric names used in wine designations are subject to the restriction set forth in § 4.24(c) regardless of whether they are listed therein, and in order to avoid the potential for unnecessary confusion, ATF has determined that there is no need to list each and every foreign geographic name that may fall within the purview of the regulation. Instead, ATF believes that a list in subpart C of part 12 of "examples" of nongeneric names for each of the petitioning countries (*e.g.*, names of foreign states, counties, wine-growing regions, viticultural areas, and other names of geographic significance) provides a more feasible framework for the purposes of publication.

The names selected for publication as nongeneric in subpart C of the new part 12 represent a cross-section of the types of names which ATF considers to be of geographic significance. The list includes names of geographically demarcated areas, such as political subdivisions and wine-growing regions or districts, from each of the petitioning countries (*e.g.*, "New South Wales" (Australia); "Sitia" (Greece); "Valles Calchaquies" (Argentina)). Some commune and/or vineyard names are also published as examples of nongeneric names (*e.g.*, "Clos de Tart" for France; and "Oppenheimer Krotenbrunnen" for the Federal Republic of Germany).

Although it was stated in Notice No. 657 that only the names of principal geographic areas were being proposed for publication as nongeneric, and not the names of individual communes and/or vineyards within them, several of the names listed in the Notice are, in fact, commune or vineyard names. Several commenters had objected to the proposed exclusion of these names, noting that, with respect to wines from certain countries, the names of individual communes and/or vineyards standing alone as a wine designation may be of even greater significance than the name of the larger geographic area.

Since commune and/or vineyard names are subject to the same restriction under § 4.24(c) as names of larger geographic areas in that they may be used in the designation of only those wines of the origin indicated by such name, ATF believes that the list of nongeneric names in subpart C of the new part 12 should include examples of commune and vineyard names.

Furthermore, in some instances the list of examples of nongeneric names includes the names of wines associated with particular geographic areas, as requested by the petitioning country (*e.g.*, "Vin de Savoie" (France) and "Retsina Attica" (Greece)). By this process, ATF is not suggesting that color, varietal, or quality terms standing alone are nongeneric but is recognizing a nongeneric wine designation in its full context.

In addition, this final rule lists "Cava", a term used in the designation of certain sparkling wines, as an example of a nongeneric name for Spain. In ATF Rul. 79–1, 1979–1 ATF Q.B. 21, ATF recognized the name "Sekt" (also a term used in the designation of sparkling wine), as an example of a nongeneric name for Germany and Austria. This final rule also lists the term "Sekt" as an example of a nongeneric name for these two countries in the new part 12.

Furthermore, to the extent the nongeneric names listed in Notice No. 657 repeat a geographic name (*e.g.*, "Hunter River Valley," and the variations "Hunter River," and "Hunter Valley" for Australia), only one variation was selected for listing in subpart C of the new part 12. For geographic designations that are modified by a production term (*e.g.*, "Montlouis," and the variations "Montlouis Mousseux," and "Montlouis Petillant" listed in Notice No. 657 for France), only the geographic name is

listed in the final rule (with some exceptions as more fully discussed in the portion of this document which addresses distinctive designations).

Finally, in applying the restriction in § 4.24 concerning the use of nongeneric names, ATF will refer to the petitions submitted by the various national governments as well as to the names that were listed as nongeneric in Notice No. 657.

B. Distinctive Designations

In Notice No. 657, ATF proposed to recognize 618 nongeneric names submitted from eight countries as names which are also "distinctive" designations, *i.e.*, names of geographic significance that are known to the U.S. consumer and trade as the designation of a specific wine of a particular place or region, distinguishable from all other wines. More than half of the 618 names in the Notice were listed for France.

Many of the names submitted by France and proposed as distinctive in Notice No. 657 were "Vin de Pays" table wine designations. Several commentators, including the FEVS and the Wine Institute, noted that these names do not refer to distinctive wines. ATF agrees and is not listing "Vins de Pays" names as distinctive designations.

In addition, the INAO had requested that certain names currently recognized as distinctive for France in § 4.24(c) be deleted from that section. Specifically, the INAO had indicated that the following names are not French appellations of origin or are no longer considered appellations of origin: "Alsation," "Anjou-Saumur," "Cote Beaujolaise," "Coteaux re la Loise," "Cote Maconnaise" or "Maconnaise," "Flagey-Echezeaux," "Grand Chablis" or "Bourgogne des Environs de Chablis," "Graves Barsac," and "Morey."

ATF has determined that the above designations are not currently known to the U.S. consumer and trade as the designations of specific wines distinguishable from all other wines and is no longer listing these names as distinctive designations.

With respect to the other proposed distinctive designations from France as well as from the other countries, certain foreign respondents, notably the FEVS and the INAO, questioned why only those names that are known to the American consumer and trade should be considered distinctive designations. For example, these commenters urged that all French AOC designations be listed as distinctive. On the other hand, the Wine Institute and many domestic wine producers asserted that the "distinctive" designations listed in Notice No. 657 were unrecognizable to the American consumer and trade as the designations of specific wines of a particular place or region distinguishable from all other wines.

As indicated above, section 105(e) of the FAA Act mandates that ATF prescribe regulations as will provide the consumer with adequate information as to the identity and quality of alcohol beverage products. Although many of the names proposed for recognition as distinctive designations in Notice No. 657 may be names which the national governments restrict, as a matter of practice, to their own distinctive wine products, ATF has determined that there is insufficient evidence to support a finding that the majority of these names are currently known to the U.S. consumer and trade as distinctive designations, as that term is defined in § 4.24(c)(1).

In this regard, there is no evidence in the petitions submitted by the various national governments that the names submitted are known to the American trade and consumer as distinctive designations. Furthermore, a review of leading wine encyclopedias and reference books, such as "Alexis Lichine's New Encyclopedia of Wines and Spirits," fifth edition, 1987 (hereafter referred to as "Lichine's"), and "The World Atlas of Wine," by Hugh Johnson, 1985 (hereafter "Johnson's"), confirms that most of the names proposed in Notice No. 657 are not well known outside the country of origin. Similarly, ATF believes that the designation "Swiss" or "Suisse" proposed to be retained as a distinctive designation for Switzerland in Notice No. 657 is not currently known to the U.S. consumer and trade as the designation of a specific wine distinguishable from all other wines. The names "Swiss" and "Suisse" are, however, nongeneric names for the country of Switzerland, even though not distinctive. Finally, a review of the certificates of label approval issued by ATF over a ten year period with respect to many of the foreign nongeneric names proposed as distinctive designations in notice No. 657 does not provide evidence that these wines are widely distributed throughout the United States.

Nevertheless, contrary to the blanket assertion of the Wine Institute that none of the names proposed as distinctive designations in Notice No. 657 are known as such to the U.S. consumer and trade, ATF believes that 128 names submitted by five countries may be recognized in subpart D of the new part 12 as distinctive designations for purposes of § 4.24(c)(1). Of these 128 names, fifty-five have been listed in § 4.24(c) as examples of distinctive wine designations since the 1930's and are retained as distinctive designations in this final rule. Examples of these names are "Chateauneuf-du-Pape" for France and "Mosel-Saar-Ruwer" for Germany. In addition, the designation "Rioja" for Spain recognized in Rev. Rul. 61–110, 1961–1 C.B. 847, and the five Italian wine designations recognized as distinctive in ATF Rul. 73–23, 1973 ATF C.B. 88 ("Soave," "Bardolino," "Barolo," "Frascati," and "Valpolicella"), are likewise listed as examples of distinctive designations.

The remaining names that are being recognized in subpart D of the new part 12 as distinctive designations are names such as "Batard-Montrachet" and "Moulin-a-Vent" for France; "Piesporter Goldtropchen" and "Ockfener Bockstein" for Germany; "Barbera d'Asti" and "Orvieto" for Italy; and "Dao" for Portugal. The petitions submitted by the respective national governments in conjunction with literature such as Lichine's and Johnson's which provides information concerning national requirements with respect to growing area, yield per acre, crushing, blending, grape variety, and other enological practices, establishes that these names are the designations of specific grape wines from a particular place or region distinguishable from all other wines.

Leading literature, such as Lichine's and Johnson's, likewise confirms that each of these names are generally well known as distinctive wine designations. ATF believes that these names are equally well known to the American consumer and trade as a result of their evolving understanding concerning the significance of distinctive wine designations. Finally, the significant number of certificates of label approval issued by ATF to importers throughout the United States for labels bearing these wine designations is evidence that these names are known to the U.S. consumer and trade as distinctive wine designations.

In some instances, varietal, color, or quality terms may appear as part of the distinctive designation (*e.g.*, Rose d'Anjou). ATF is not suggesting that varietal, color, or quality terms standing alone are distinctive designations for a particular country but is merely recognizing a distinctive class and type designation in its full context.

C. Distinctive Designations That Were Not in Notice No. 657

ATF has determined that certain names not proposed in Notice No. 657 for recognition as distinctive

designations should be so recognized in subpart D of the new part 12.

Specifically, during the comment period following the issuance of Notice No. 657, a request was made on behalf of the Italian Government, as well as by the importer Martini & Rossi Corp., that the designation "Asti Spumante" also be recognized as a distinctive designation for Italy. The commenters presented evidence that this name is officially recognized by Italy as a distinctive sparkling wine made from white muscat grapes from the Asti region. The commenters also cited literature such as Lichine's in support of their position that the name "Asti Spumante" is well known to the U.S. consumer and trade as a distinctive designation. ATF agrees that "Asti Spumante" should be recognized in the final rule as a distinctive designation for Italy.

This final rule also recognizes the names "Bonnes Mares," "La Tache," and "Richebourg" for France, and "Gattinara" for Italy as distinctive designations. Although these names were published in Notice No. 657, they were not proposed as distinctive designations. ATF believes that these names are well-documented in the leading literature as the names of distinctive wines and that these names are known to the American trade and consumer as such.

Finally, ATF believes that certain German village/vineyard names also qualify as distinctive designations. Names such as "Bernkasteler Doctor," "Piesporter Michelsberg," and "Schloss Vollrads," are designations for distinctive wine products from Germany and are equally well known to the U.S. consumer and trade as such, as evidenced by the literature and an analysis of certificates of label approval which reveals a significant number of label approvals issued for these wines to importers throughout the United States.

It must be emphasized that ATF is not suggesting that the names proposed for recognition as nongeneric distinctive designations in Notice No. 657 and not listed in this final rule are not, in fact, names which the various national governments restrict to their own distinctive wine products. Rather, ATF has ultimately determined, after review of the comments and the available literature and as a result of its analysis of certificates of label approval, that only 67 foreign nongeneric names, in addition to the 61 foreign names currently recognized in the regulations or in rulings, are known to the U.S. consumer and trade as distinctive wine designations.

Finally, this final rule prescribes a procedure whereby the various national governments may request ATF recognition of distinctive designations in addition to those being included in this regulation.

D. Semigeneric Names

As indicated above, commenters, such as the Wine Institute, expressed the view that many of the foreign names proposed for recognition in Notice No. 657 should be found by ATF to be semigeneric, *i.e.*, a name which retains some geographic significance but which is also known as the designation of a class or type of wine and, thus, may be used to designate wines of an origin other than that indicated by the geographic name in accordance with § 4.24(b).

However, one of the questions posed by ATF in Notice No. 657 was whether any of the listed nongeneric designations, particularly those which have been enumerated in § 4.24(c) since the 1930's, have become semigeneric (or generic). No evidence was provided that any of the names listed as nongeneric in this final rule have become semigeneric terms.

At the same time, several of the foreign commenters, including the Embassy of Spain, the FEVS, and the INAO, requested that names such as "Sherry," and "Champagne" be recognized as nongeneric distinctive designations. However, these names have been recognized in § 4.24(b)(2) since the 1930's as examples of semigeneric names which are also type designations for grape wines and are thus outside the purview of this final rule.

V. Nongeneric Names That Are Similar or Identical to Each Other or to Varietal, Trade, and Brand Names

In Notice No. 657, ATF requested comments concerning the potential for consumer confusion to the extent that the foreign names proposed for recognition as nongeneric designations are identical or similar to each other or to the names of U.S. States, counties, or other appellations, or are similar or identical to grape varietal names or to American trade and brand names.

The comments submitted on this point varied—from the blanket objection of the Wine Institute that recognition of *any* foreign nongeneric name that is identical or similar to a U.S. geographic name, to a varietal name, or to any U.S. brand or trade name would be misleading to the American consumer, to the view urged by the Government of Australia that Australian names (such as "Great Western"), should not be confused with American names since the wine will be identified as a product of Australia.

A. Names That Are Similar or Identical

After consideration of the comments, ATF believes that the mere fact that foreign nongeneric names may be similar or identical to each other or to the names of U.S. geographic areas (*e.g.*, "North Richmond" for Australia and "Richmond" for New Zealand, and "Alto Colorado" for Argentina and the U.S. State "Colorado"), does not mean that these names should not be recognized as nongeneric. As indicated above, any name identified by a foreign government as a bonafide geographically demarcated area or as a name indicative of a wine product from such an area may be recognized as nongeneric for purposes of § 4.24(c).

Nevertheless, the regulations in 27 CFR part 4 prohibit, among other things, the appearance on wine labels of any information which, irrespective of falsity, directly or indirectly tends to create a misleading impression or which indicates or infers an origin other than the true place of origin of the wine. Any question concerning the potential for consumer confusion with respect to the origin or identity of a wine in connection with the appearance on labels of similar or identical nongeneric names, including foreign names that are similar or identical to American geographic names, will be resolved by ATF on a case-by-case basis after scrutinizing the label as a whole. When nongeneric names that appear as part of the designation of a wine are similar to any of the names recognized in this final rule as the distinctive designation of a specific wine, ATF will closely scrutinize the label to determine whether the use of the nongeneric name creates or tends to create a misleading impression concerning the origin or identity of the wine.

B. Varietal Names

As indicated above, ATF had proposed in Notice No. 657 that foreign denominations of origin that are identical or similar to American grape varietal designations not be published as examples of nongeneric names (*e.g.*, "Valdepenas" and "Muscat de Frontignan"). An exception was made, however, for the name "Saint-Emilion" which has been recognized in § 4.24(c) as a nongeneric distinctive designation since the 1930's.

With respect to the proposed exclusion of these foreign names, many of the commenters, both foreign and domestic, expressed the view that the

restriction in § 4.24 should apply to the names of bonafide foreign geographic areas even if they also happen to be the name of a grape varietal. After consideration of the comments, ATF agrees that names of bonafide geographically demarcated areas or names which are used to designate a wine product from a particular country should be recognized as nongeneric even if they are similar or identical to varietal names. In this regard, ATF believes that any potential for consumer confusion concerning the origin of the wine is obviated by the fact that the wine labeling regulations provide that the names of grape varieties may be used as a type designation of a wine only if the wine is also labeled with an appellation of origin. 27 CFR 4.23a. In addition, any questions concerning the potential for consumer confusion as to the identity of the wine that may arise when a foreign nongeneric name is similar or identical to a varietal name will be resolved by ATF on a case-by-case basis.

Finally, after review of the comments and the available literature, ATF believes that the designation "St. Emilion" (Saint-Emilion) standing alone is well known to the American trade and consumer as the designation for a distinctive red wine from the Bordeaux region of France. Accordingly, ATF believes this name should continue to be recognized in the wine labeling regulations as a nongeneric distinctive designation for France.

C. Brand Names

As indicated above, in Notice No. 567 ATF proposed to amend 27 CFR 4.39(i) (pertaining to geographic brand names), to include a specific reference in § 4.39(i)(3) to those foreign names proposed for recognition as nongeneric in the proposed new part 12. Briefly, § 4.39(i)(1) sets forth the general rule for the use of geographic brand names on wine labels. Pursuant to that section, a brand name of viticultural significance may *not* be used unless the wine meets the appellation of origin requirements for the geographic area named. Pursuant to § 4.39(i)(3), a name has "viticultural significance" when it is the name of a State or county (or the foreign equivalents), when approved as a viticultural area in part 9 of title 27, or by a foreign government, or when found to have viticultural significance by the Director. ATF explained in Notice No. 657 that it was proposing to recognize 2,113 foreign nongeneric names as names denoting appellations of origin that may appear as brand names only on wine labels of qualifying wines from the appropriate origin, as required by § 4.39(i)(1).

As indicated above, the Wine Institute and many of the domestic commenters stated that the foreign names proposed for recognition in the Notice are not viticulturally significant and that ATF was improperly proposing to allow foreign wine producers to "reserve" the use of wine terms. These same commenters also requested that ATF adopt a procedure whereby ATF would "approve" foreign viticultural areas in the same manner that ATF currently approves the establishment of American viticultural areas pursuant to § 4.25a(e)(2).

After review of the petitions submitted by the various countries as well as the comments and the available literature, ATF believes that while many of the nongeneric names listed in Notice No. 657 qualify as appellations of origin, including viticultural areas, many names do not appear to so qualify. Briefly, with respect to imported wines, § 4.25a(a)(2) defines an "appellation of origin" as (i) a country; (ii) a state, province, territory, or similar political subdivision of a country equivalent to a state or county; or (iii) a viticultural area. In turn, a "viticultural area" for imported wines is defined in § 4.25a(e)(1)(ii) as a delimited place or region (other than a country, state, or political subdivision of a state), the boundaries of which have been recognized and defined by the country of origin for use on labels of wine available for consumption within the country of origin.

For purposes of this final rule, ATF has determined that there is no need to amend the language of the current § 4.39(i)(3). To the extent that a particular foreign nongeneric name is also a name denoting a foreign country, state, county, or viticultural area, or other name which the Director finds to be of viticultural significance, then its use as a brand name is currently restricted, as generally provided in § 4.39(i)(1). In particular, ATF believes that each of the nongeneric distinctive designations listed in subpart D of the new part 12 are names of viticultural significance, as that term is defined in § 4.39(i)(3).

Finally, it must be emphasized that it is not the policy of ATF to become involved in private disputes involving proprietary rights, such as trademark infringement suits. ATF's mandate is to enforce the requirements of section 105(e) of the FAA Act and the implementing regulations to insure that the consumer is not misled with respect to the origin and identity of the wine.

D. Country of Origin Requirements

As indicated above, several foreign commenters requested that the regulations be amended to state that no foreign geographically significant name may appear on a wine label unless the name is permitted by the country of origin.

ATF believes there is no need to amend the current regulations. To the extent a nongeneric name appearing on the label is also an appellation of origin, § 4.25a(b)(2)(i) provides, in pertinent part, that the wine must conform to the requirements of the foreign laws and regulations governing the composition, method of production, and designation of wines available for consumption within the country of origin. In addition, § 4.39 generally prohibits the appearance of any false or misleading statement on the label and specifically prohibits the use of false or misleading indications of origin and foreign terms.

VI. Conclusion

In view of the foregoing, ATF is adding a new part 12 to title 27, CFR entitled "Foreign Nongeneric Names of Geographic Significance Used in the Designation of Wines." Subpart C of the new part 12 lists additional examples from 13 countries of nongeneric names which are not the distinctive designations of specific wines. Subpart D of part 12 lists foreign nongeneric names from five countries which the Director finds are also distinctive wine designations, as that term is defined in § 4.24(c)(1).

Section 4.24(c) (2) and (3) of the regulations has been amended to make reference to the new part 12. This final rule also removes the current § 4.24(c)(4) which lists examples of names which are distinctive designations of specific natural table wines when qualified by the word "wine" or its French or German equivalent. The examples of distinctive designations that were formerly listed in § 4.24(c)(4) are now listed by country in subpart D of the new part 12. In a manner similar to the current § 4.24(c)(3), ATF believes that there is no need to require that a distinctive designation be qualified by the word wine, in view of the American consumer's evolving understanding of the significance of distinctive designations.

Finally, this final rule incorporates the foreign nongeneric names recognized in Rev. Rul. 61-110, ATF Rul. 73-23, and ATF Rul. 79-1 referred to above. Accordingly, with the effective date of this final rule, Rev. Rul. 61-110, 1961-1 C.B. 847; ATF Rul. 73-23, 1973 ATF C.B.

88; and ATF Rul. 79-1, 1979-1 ATF Q.B. 21 are superseded.

Executive Order 12291

It has been determined that this final rule is not a major regulation as defined in E.O. 12291 and a regulatory impact analysis is not required because it will not have an annual effect on the economy of $100 million or more; it will not result in a major increase in costs or prices for consumers, individual industries, Federal, State, or local government agencies, or geographic regions; and it will not have significant adverse effects on competition, employment, investment, productivity, innovation, or on the ability of United States-based enterprises to compete with foreign-based enterprises in domestic or export markets.

Regulatory Flexibility Act

It is hereby certified that this regulation will not have a significant economic impact on a substantial number of small entities. Accordingly, a regulatory flexibility analysis is not required.

This certification is based upon the fact that this final rule does not impose, or otherwise cause, a significant increase in reporting, recordkeeping, or other compliance burdens on a substantial number of small entities and is not expected to have significant secondary, or incidental effects on a substantial number of small entities.

Paperwork Reduction Act

The provisions of the Paperwork Reduction Act of 1980, Public Law 96-511, 44 U.S.C. chapter 35, and its implementing regulations, 5 CFR part 1320, do not apply to this final rule because no requirement to collect information is imposed.

Drafting Information

The principal authors of this document are Gale Guinand, International Liaison Officer, Alcohol Import-Export Branch, and Richard Gahagan, Wine Technical Advisor, Bureau of Alcohol, Tobacco and Firearms.

List of Subjects

27 CFR Part 4

Advertising, Consumer protection, Customs duties and inspection, Imports, Labeling, Packaging and containers, Wine.

27 CFR Part 12

Administrative practice and procedures, Imports, Labeling, Wine.

Authority and Issuance

27 CFR Part 4—Labeling and Advertising of Wine is amended as follows:

PART 27—LABELING AND ADVERTISING OF WINE

Paragraph 1. The authority citation for 27 CFR part 4 continues to read as follows:

Authority: 27 U.S.C. 205.

Par. 2. The table of contents is amended by adding in the Cross References section the phrases "27 CFR part 9—American Viticultural Areas" and 27 CFR part 12—Foreign Nongeneric Names of Geographic Significance Used in the Designation of Wines," immediately after "27 CFR part 7—Labeling and Advertising of Malt Beverages."

Par. 3. Section 4.24 is amended by revising paragraphs (c)(2) and (c)(3) and removing (c)(4), to read as follows:

§ 4.24 Generic, semigeneric and nongeneric designations of geographic significance.

* * * * *

(c) * * *

(2) Examples of nongeneric names which are not distinctive designations of specific grape wines are: American, California, Lake Erie, Napa Valley, New York State, French, Spanish. Additional examples of foreign nongeneric names are listed in subpart C of part 12 of this chapter.

(3) Examples of nongeneric names which are also distinctive designations of specific grape wines are: Bordeaux Blanc, Bordeaux Rouge, Graves, Medoc, Saint-Julien, Chateau Yquem, Chateau Margaux, Chateau Lafite, Pommard, Chambertin, Montrachet, Rhone, Liebfraumilch, Rudesheimer, Forster, Deidesheimer, Schloss Johannisberger, Lagrima, and Lacryma Christi. A list of foreign distinctive designations, as determined by the Director, appears in subpart D of part 12 of this chapter.

Par. 4. Title 27 is amended by the addition of a part 12 to read as follows:

PART 12—FOREIGN NONGENERIC NAMES OF GEOGRAPHIC SIGNIFICANCE USED IN THE DESIGNATION OF WINES

Subpart A—General Provisions

Sec.
12.1 Scope.
12.2 Territorial extent.
12.3 Procedure for recognition of foreign distinctive designations.

Subpart B—[Reserved]

Subpart C—Foreign Nongeneric Names of Geographic Significance

12.21 List of examples of names by country.

Subpart D—Foreign Nongeneric Names Which Are Distinctive Designations of Specific Grape Wines

12.31 List of recognized names by country.

Authority: 27 U.S.C. 205.

Subpart A—General Provisions

§ 12.1 Scope.

The regulations in this part relate to foreign names of geographic significance used in the designation of wines which are recognized as nongeneric under 27 CFR 4.24, and include those nongeneric names which the Director has found to be distinctive designations of wine, as defined in § 4.24(c)(1)of this chapter.

§ 12.2 Territorial extent.

This part applies to the several States of the United States, the District of Columbia, and Puerto Rico.

§ 12.3 Procedure for recognition of foreign distinctive designations.

(a) *Procedure.* Under the provisions of 27 CFR 71.41(c), the Director may approve petitions requesting ATF recognition of names of geographic significance which are the distinctive designations of specific wines under § 4.24(c) of this chapter.

(b) *Format.* A petition shall be in the form of a letterhead application requesting that ATF recognize the distinctive wine designation listed in their petition. The petition should present evidence to support a finding that the geographic designation is known to the U.S. consumer and trade as the designation of a specific wine of a particular place or region, distinguishable from all other wines. All background material and supporting data submitted will be made part of the application and will be considered in the review process.

Subpart B—[Reserved]

Subpart C—Foreign Nongeneric Names of Geographic Significance

§ 12.21 List of examples of names by country.

The names listed in this section are examples of foreign nongeneric names of geographic significance under § 4.24(c) (1) and (2) of this chapter.

(a) *Argentina:* Alto Colorado, Valles Calchaquies.

(b) *Australia:* Adelaide, Barossa Valley, Clare Valley, Cowra, Forbes, Geelong, Goulburn Valley, Granite Belt,

Great Western, Hunter Valley, McLaren Vale, Mudgee, Murray River Valley, New South Wales, North Richmond, Queensland, South Australia, Swan Valley, Tasmania, Victoria, Western Australia, Yarra Valley.

(c) *Austria:* Bisamberg-Kreuzenstein, Burgenland, Carnuntum, Frauenweingarten, Kapellenweg, Kirchberger Wagram, Matzner Hugel, Niederosterreich, Nussberg, Pinkatal, Schatzberg, Sekt, Wachau, Weststeiermark, Wien.

(d) *Federal Republic of Germany:* Ahr, Bacharach, Bad Durkheim, Baden, Badisches Frankenland, Badstube, Bayerischer Bodensee, Bernkastel, Bingen, Breisgau, Deidesheimer Hofstuck, Dhroner Hofberger, Erdener Treppchen, Graach, Graben, Hessische Bergstrasse, Himmelreich, Hochheimer Holle, Johannisberg, Klosterberg, Kocher-Jagst-Tauber, Kreuznach, Kurfurstlay, Loreley, Maindreieck, Mainviereck, Markgraflerland, Mittelrhein, Moseltor, Nahe, Nierstein, Obermosel, Oppenheimer Krotenbrunnen, Ortenau, Remstal-Stuttgart, Rhein-Burgengau, Rheinfalz, Rheingau, Rheinhessen, Schloss Bockelheim, Sekt, Siebengebirge, Starkenburg, Steigerwald, Sudliche Weinstrasse, Trier, Umstadt, Urziger Wurzgarten, Walporzheim/Ahrtal, Wiltinger Scharzberg, Winkeler Jesuitengarten, Wonnegau, Wurttemberg, Zell/Mosel.

(e) *France:* Ajaccio, Arbois, Auxey-Duresses, Bandol, Bearn, Bellet, Bergerac, Blagny, Blaye, Bonnezeaux, Bourg, Buzet, Cadillac, Cahors, Canon-Fronsac, Cassis, Cerons, Charlemagne, Chateau Chalon, Chateau-Grillet, Chinon, Chorey-les-Beaunes, Clos de Tart, Clos des Lambrays, Clos Saint-Denis, Collioure, Condrieu, Cornas, Coteaux de l'Aubance, Coteaux du Languedoc, Coteaux du Loir, Coteaux du Lyonnais, Coteaux du Tricastin, Cotes de Duras, Cotes de Provence, Cotes du Jura, Cotes du Roussillon, Cotes du Ventoux, Crepy, Dezize-les-Maranges, Faugeres, Fitou, Fixin, Gaillac, Gigondas, Givry, Gros Plant, Irouleguy, Jasnieres, Jurancon, Ladoix, L'Etoile, Limoux, Lirac, Loupiac, Madiran, Mazis-Chambertin, Menetou Salon, Minervois, Monbazillac, Montagny, Monthelie, Montlouis, Montravel, Moulis, Muscat de Beaumes de Venise, Muscat de Frontignan, Neac, Pacherenc du Vic Bilh, Palette, Pecharmant, Pernand-Vergelesses, Picpoul-de-Pinet, Pineau des Charentes, Pouilly-Loche, Quarts-de-Chaume, Quincy, Regnie, Reuilly, Rosette, Rully, Saint-Aubin, Saint-Chinian, Saint-Georges-d'Orques, Saint-Joseph, Saint-Nicolas-de-Bourgueil, Saint-Peray, Saint-Romain, Saint-Veran, Sainte-Croix-du-Mont, Saussignac, Sauvignon de Saint-Bris, Savennieres, Seyssel, Vin de Lavilledieu, Vin de pays de l'Aude, Vin de Savoie, Vin du Bugey, Vin du Haut-Poitou.

(f) *Greece:* Aghialos, Amynteon, Archanes, Daphnes, Goumenissa, Kantza, Mantinea, Mavrodaphni Cefalonia, Mavrodaphni Patras, Moschatos Lemnos, Moschatos Rhodes, Naoussa, Nemea, Paros, Peza, Plagies Melitona, Rapsani, Retsina Attica, Retsina Megaron, Samos, Santorini, Sitia, Sitsa.

(g) *Italy:* Abruzzo, Acqui, Affile, Aleatico di Gradoli, Alto Mincio, Avellino, Barbera del Monferrato, Basilicata, Bianco di Custoza, Bianco Pisano di S. Torpe, Boca, Campidano di Terralba, Castelli di Jesi, Chieri, Cinque Terre, Ciro, Colli Albani, Colli del Trasimeno, Diano d'Alba, Est! Est! Est! di Montefiascone, Etna, Fara, Faro, Franciacorta, Gabiano, Gavi, Ghemme, Ischia, Lambrusco Reggiano, Lamezia, Langhe Monregalesi, Lessona, Lipari, Melissa, Metauro, Molise, Olevano Romano, Oristano, Ovada, Parrina, Piceno, Piemonte, Piglio, Pollino, Puglia, Romagna, Rosso Barletta, Savuto, Sicilia, Sorbara, Sulcis, Taurasi, Torgiano, Trani, Valtellina Sassella, Velletri, Veneto, Vermentino di Gallura, Vesuvio, Vulture, Zagarolo.

(h) *New Zealand:* Blenheim, Canterbury, Central Otago, Gisborne, Hawkes Bay, Henderson, Marlborough, Nelson, Northland, Richmond, Rodney, South Auckland, Te Kauwhata, Wanganui, Wellington.

(i) *Portugal:* Algarve, Alijo, Bairrada, Baixo Corgo, Basto, Beiras, Belem, Braga, Bucelas, Camara de Lobos, Campanario, Cantahede, Carcavelos, Cartaxo, Chamusca, Colares, Douro, Estremadura, Favaios, Lafoes, Lagoa, Lagos, Lamego, Lousada, Meda, Mesao Frio, Moncao, Moscatel de Setubal, Murca, Nelas, Penafiel, Pico, Portimao, Preces, Ribatejo-Oeste, Sabrosa, Santa Luzia, Sao Joao, Sao Martinho, Sao Pedro, Tavira, Torres Vedras, Tras-os-Montes, Viana do Castelo, Vila Real, Vinho Verde.

(j) *Romania:* Alba Iulia, Arges, Bistrita-Nasaud, Bujoru, Cotesti, Cotnari, Dealu Mare, Dealurile, Dragasani, Drobeta Turnuseverin, Istria, Ivesti, Jidvei, Medias, Mehedinti, Minis, Moldovei, Murfatlar, Nicoresti, Odobesti, Oltina, Panciu, Recas, Sarica Niculitel, Sebes, Segarcea, Tecuci-Galati, Teremia, Tirnave.

(k) *Spain:* Alella, Alicante, Almansa, Ampurdan-Costa Brava, Campo de Borja, Carinena, Cava, Condado de Huelva, Jumilla, La Mancha, Manzanilla-Sanlucar de Barrameda, Mentrida, Montilla-Moriles, Navarra, Penedes, Priorato, Ribeiro, Ribera del Duero, Rueda, Tarragona, Utiel-Requena, Valdeorras, Valencia, Yecla.

(l) *Switzerland:* Agarn, Aire-la-Ville, Argovie, Auvernier, Avully, Berne, Bernex, Bonvillars, Bratsch, Chalais, Chamoson, Cressier, Cully, Dardagny, Dezaley, Epesses, Erlenbach, Friburg, Fully, Geneve, Grisons, Gy, Herrliberg, Hornussen, La Cote, Lavaux, Lens, Limmattal, Lucerne, Lutry, Meilen, Montreux, Neuchatel, Niedergesteln, Riex, Rivaz, Schaffhouse, Schlossgut Herdern, Schwyz, Suisse, Swiss, Tessin, Thurgovie, Valais, Varen/Varone, Vaud, Veyrier, Villette, Zeneggen, Zurcher Unterland, Zurich.

(m) *Yugoslavia:* Blatina Mostar, Bolski Plavac, Borje, Brodska Grasevina, Crnogorski Vranac, Dingac, Erdutski Burgundac Bijeli, Faros, Grk Lumbarda, Ilocka Frankovka, Kutjevacka Grasevina, Merlot Bujstine, Plesivicki Rizling Rajnski, Porecki Merlot, Postup, Primostenski Babic, Smedereveski Sovinjon, Vinaracki Merlo, Viska Vugava, Vrsacki Rizling, Zlata Radgonska Penina.

Subpart D—Foreign Nongeneric Names Which Are Distinctive Designations of Specific Grape Wines

§ 12.31 List of approved names by country.

The names listed in this section are foreign nongeneric names of geographic significance which are also recognized by the Director as distinctive designations of specific grape wines, in accordance with § 4.24 (c)(1) and (3) of this chapter.

(a) *Federal Republic of Germany:* Bernkasteler Doctor (Doktor), Deidesheimer, Dexheimer Doktor, Erbacher Marcobrunn, Forster, Forster Jesuitengarten, Graacher Himmelreich, Liebfraumilch, Liebfrauenmilch, Mosel, Mosel-Saar-Ruwer, Ockfener Bockstein, Piesporter Goldtropfchen, Piesporter Michelsberg, Piesporter Treppchen, Rudesheimer, Scharzhofberger, Schloss Johannisberger, Schloss Vollrads, Wehlener Sonnenuhr, Zeller Schwarze Katz.

(b) *France:* Aloxe-Corton, Alsace or Vin d'Alsace, Anjou, Barsac, Batard-Montrachet, Beaujolais, Beaujolais Villages, Beaune, Bonnes Mares, Bordeaux, Bordeaux Blanc, Bordeaux Rouge, Bourgogne, Brouilly, Chambertin Chambolle-Musigny, Charmes-Chambertin, Chassagne-Montrachet, Chateau Lafite, Chateau Margaux, Chateau Yquem, Chateauneuf-du-Pape, Chenas, Chevalier-Montrachet,

Chiroubles, Clos de la Roche, Clos de Vougeot, Corton, Corton-Charlemagne, Cote de Beaune, Cote de Beaune-Villages, Cote de Brouilly, Cote de Nuits, Cote de Nuits-Villages, Cote Rotie, Coteaux du Layon, Cotes du Rhone, Echezeaux, Entre-Deux-Mers, Fleurie, Gevrey-Chambertin, Grands Echezeaux, Graves, Haut Medoc, Hermitage, La Tache, Loire, Macon, Margaux, Medoc, Mercurey, Meursault, Montrachet, Morgon, Moulin-a-Vent, Muscadet, Musigny, Nuits or Nuits-Saint-Georges, Pauillac, Pomerol, Pommard, Pouilly-Fuisse, Pouilly Fume, Puligny-Montrachet, Rhone, Richebourg, Romanee-Conti, Romanee Saint-Vivant, Rose d'Anjou, Saint-Amour, Saint-Emilion, Saint-Estephe, Saint-Julien, Sancerre, Santenay, Saumur, Savigny or Savigny-les-Beaunes, Tavel, Touraine, Volnay, Vosne-Romanee, Vouvray.

(c) *Italy:* Asti Spumante, Barbaresco, Barbera d'Alba, Barbera d'Asti, Bardolino, Barolo, Brunello di Montalcino, Dolcetto d'Alba, Frascati, Gattinara, Lacryma Christi, Nebbiolo d'Alba, Orvieto, Soave, Valpolicella, Vino Nobile de Montepulciano.

(d) *Portugal:* Dao, Oporto, Porto, or Vinho do Porto.

(e) *Spain:* Lagrima, Rioja.

Signed: January 26, 1990.

Stephen E. Higgins,

Director.

Approved: March 13, 1990.

Peter K. Nunez,

Assistant Secretary (Enforcement).

[FR Doc. 90-9561 Filed 04-27-90; 8:45 am]

BILLING CODE 4810-31-M

DEPARTMENT OF TRANSPORTATION

Coast Guard

33 CFR Part 100

[CGD13 90-01]

Special Local Regulations; Portland, OR, Fox 49 River Grand Prix

AGENCY: Coast Guard, DOT.

ACTION: Final rule.

SUMMARY: Special Local Regulations are being adopted for the Portland, Oregon, Fox 49 River Grand Prix to be held on the waters of the Willamette River in Portland, Oregon. This event will be held on June 29, 30, and July 1, 2, 1990, from 9 a.m. PDT until 4:30 p.m. PDT. The regulations are needed to promote the safety of life on navigable waters during the event.

EFFECTIVE DATES: These regulations become effective on June 29, 30, and July 1, 2, 1990, at 9 a.m. PDT and terminate at 4:30 p.m. on June 29, 30, and July 1, 2, 1990, or upon completion of each event.

FOR FURTHER INFORMATION CONTACT: BMC F. L. Casanova, Coast Guard Marine Safety Office, Portland, Oregon, (503) 240-9319.

SUPPLEMENTARY INFORMATION: On 14 March 1990, The Coast Guard published a Notice of Proposed Rulemaking in the **Federal Register** for these regulations (55 FR 9465). Interested persons were requested to submit comments. None were received.

Drafting Information

The drafters of this notice are BMC F. L. Casanova, USCG, Project Officer, U.S. Coast Guard Marine Safety Office, Portland, Oregon, and LT Deborah Schram, USCG, Project Attorney, Thirteenth Coast Guard District Legal Office, Seattle, Washington.

Discussion of Regulations

The Fox 49 River Grand Prix is sponsored by the River City Events, Inc. of Portland, Oregon, and this rulemaking is undertaken at their request. The event is a series of outboard tunnel hull power boat races covering a 1¾ mile long course between the Hawthorne and Ross Island Bridges on the Willamette River in Portland, Oregon. This three-day event is expected to draw more than 50 participants and a huge crowd of spectators to the waters of the Willamette River. To promote the safety of the participants and spectators, special load regulations are required. The economic impact of this regulation is expected to be minimal as it affects a small section of the Willamette River with light commercial traffic and will be in effect for approximately seven and one-half hours only each day on June 29, 30, and July 1, 2, 1990.

List of Subjects in 33 CFR Part 100

Regattas, Marine parades.

Regulations

In consideration of the foregoing, part 100 of title 33, Code of Federal Regulations, is amended as follows:

1. The authority citation for part 100 continues to read as follows:

Authority: 33 USC 1233; 49 CFR 100.35.

2. A temporary § 100.35T1301 is added to read as follows:

§ 100.35T1301 Portland, Oregon, Fox 49 River Grand Prix.

(a) *Regulated area:* By this regulation, the Coast Guard will restrict general navigation and anchorage on the waters of the Willamette River between River Mile 13 and River Mile 14. This restricted area includes all waters between the above mile marks in Portland, Oregon, and is approximately 1 mile long.

(b) *Special local regulations:* (1) This event will take place from 9 a.m. PDT to approximately 4:30 p.m. PDT on June 29, 30, and July 1, 2, 1990, in the described waters of the Willamette River, Portland, Oregon.

(2) No person or vessel may enter or remain in the regulated area except for participants in the event, supporting personnel, vessels registered with the event organizer, and personnel or vessels authorized by the Coast Guard Patrol Commander.

(3) Patrol of the described area will be under the direction of a designated Coast Guard Patrol Commander. The Patrol Commander is empowered to control the movement of vessels in the regulated area and adjoining waters during the hours these regulations are in effect.

(4) A succession of sharp, short signals by whistle, siren, or horn, from vessels patroling the area under the direction of the Patrol Commander shall serve as a signal to stop. Vessels or persons signaled shall stop and shall comply with the orders of the patrol vessel. Failure to do so may result in expulsion from the area, citation for failure to comply, or both.

(c) *Effective times and dates:* These regulations become effective on June 29, 1990, at 9 a.m. PDT, and will terminate on July 2, 1990, at 4:30 p.m. PDT, or upon completion of each event.

Dated: April 20, 1990.

G. A. Penington,

Commander, Thirteenth Coast Guard District, DOT—U.S. Coast Guard.

[FR Doc. 90-9910 Filed 4-27-90; 8:45 am]

BILLING CODE 4910-14-M

---

33 CFR Part 165

COTP Louisville, KY; Safety Zone Regulations

AGENCY: Coast Guard, DOT.

ACTION: Emergency rule.

SUMMARY: The Coast Guard is establishing a safety zone for the Ohio River, mile 603.2 to 604.3. The zone is needed to protect all vessels and spectators from a safety hazard associated with a fireworks display sponsored by Community Promotion. Entry into this zone is prohibited unless authorized by the Captain of the Port.

EFFECTIVE DATES: This regulation becomes effective on 28 May 1990. It terminates on 28 May 1990 unless

sooner terminated by the Captain of the Port.

FOR FURTHER INFORMATION CONTACT: LTJG M.L. Austin (502) 582-5194.

SUPPLEMENTARY INFORMATION: In accordance with 5 U.S.C. 553, a notice of proposed rulemaking was not published for this regulation and good cause exists for making it effective in less than 30 days after **Federal Register** publication due to the short notice of the incident. Publishing an NPRM and delaying its effective date would be contrary to the public interest since immediate action is needed to respond to potential hazards to the vessels involved.

Drafting Information

The drafter of this regulation is LTJG M.L. Austin, project officer for the Captain of the Port.

Discussion of Regulation

The event requiring this regulation will begin on 28 May 1990 at 2130 e.d.s.t. and end on 28 May 1990 at 2300 e.d.s.t. The fireworks display will take place at mile 604.0 on the Ohio River. The river closure is needed to protect river traffic and spectators.

This regulation is issued pursuant to 33 U.S.C. 1225 and 1231 as set out in the authority citation for all of part 165.

List of Subjects in 33 CFR Part 165

Harbors, Marine safety, Navigation (water), Security measures, Vessels, Waterways.

Regulation

In consideration of the foregoing, subpart C of part 165 of title 33, Code of Federal Regulations, is amended as follows:

PART 165—[AMENDED]

1. The authority citation for part 165 continues to read as follows:

Authority: 33 U.S.C. 1225 and 1231; 50 U.S.C. 191; 49 CFR 1.46 and 33 CFR 1.05-1(g), 6.04-1, 604-6, and 160.5.

2. A new § 165.T0218 is added to read as follows:

§ 165.T0218 Safety Zone: All waters of the Ohio River from Mile 603.2 to 604.3.

(a) *Location.* The following area is a safety zone: All waters of the Ohio River Mile 603.2 to 604.3.

(b) *Effective Date.* This regulation becomes effective at 2130 e.d.s.t. on 28 May 1990. It terminates at 2300 e.d.s.t. on 28 May 1990, unless sooner terminated by the Captain of the Port.

(c) *Regulations.* (1) In accordance with the general regulations in § 165.23 of this part, entry into this zone is prohibited unless authorized by the Captain of the Port.

(2) The Captain of the Port's representative may be contacted on VHF radio Channel 16 during the event.

Dated: April 12, 1990.

M.P. Rolman,

Alternate Captain of the Port, Louisville, Kentucky.

[FR Doc. 90-9911 Filed 4-27-90; 8:45 am]

BILLING CODE 4910-14-M

FEDERAL COMMUNICATIONS COMMISSION

47 CFR Part 73

[MM Docket No. 89-395; RM-6780]

Radio Broadcasting Services; Kailua-Kona, Hawaii

AGENCY: Federal Communications Commission.

ACTION: Final rule.

SUMMARY: This document, at the request of Sirius Communications, Inc., substitutes Channel 230C for Channel 229C1 at Kailua-Kona, Hawaii, and modifies its construction permit for Station KLUA(FM) to specify operation on the higher powered channel. See 54 FR 40139, September 29, 1989. Channel 230C can be allotted to Kailua-Kona in compliance with the Commission's minimum distance separation requirements. The coordinates are North Latitude 19-38-24 and West Longitude 155-59-36. With this action, this proceeding is terminated.

EFFECTIVE DATE: June 8, 1990.

FOR FURTHER INFORMATION CONTACT: Nancy J. Walls, Mass Media, (202) 634-6530.

SUPPLEMENTARY INFORMATION: This is a synopsis of the Commission's Report and Order, MM Docket No. 89-395, adopted March 23, 1990, and released April 24, 1990. The full text of this Commission decision is available for inspection and copying during normal business hours in the FCC Dockets Branch (Room 230), 1919 M Street NW., Washington, DC. The complete text of this decision may also be purchased from the Commission's copy contractors, International Transcription Service, (202) 857-3800, 2100 M Street NW., Suite 140, Washington, DC 20037.

List of Subjects in 47 CFR Part 73

Radio Broadcasting.

PART 73—[AMENDED]

1. The authority citation for part 73 continues to read as follows:

Authority: 47 U.S.C. 154, 303.

§ 73.202 [Amended]

2. Section 73.202(b), the Table of FM Allotments is amended by removing Channel 229C1 and adding Channel 230C at Kailua-Kona, Hawaii.

Karl A. Kensinger,

Chief, Allocations Branch, Policy and Rules Division, Mass Media Bureau.

[FR Doc. 90-9884 Filed 4-27-90; 8:45 am]

BILLING CODE 6712-01-M

DEPARTMENT OF TRANSPORTATION

National Highway Traffic Safety Administration

49 CFR Part 571

RIN 2127-AA95

[Docket No. 87-02; Notice 2]

Federal Motor Vehicle Safety Standards; Seat Belt Assembly Anchorages

AGENCY: National Highway Traffic Safety Administration (NHTSA), DOT.

ACTION: Final rule.

SUMMARY: This rule makes several amendments to the safety standard regulating seat belt assembly anchorages. Specifically, this rule:

1. Increases the minimum lap belt angle to reduce the likelihood of occupant submarining in a crash (i.e., the occupant sliding forward and under the safety belt in a crash);

2. Exempts front outboard designated seating positions equipped with automatic safety belts or dynamically tested manual safety belts from the requirement that those positions also be equipped with anchorages for manual lap/shoulder belts. This exemption will remove an unnecessary and redundant regulatory requirement without reducing occupant safety;

3. Permits the optional use of some new test equipment for compliance testing to make the compliance tests simpler and less costly to perform; and

4. Clarifies some ambiguities in the current compliance testing procedures so that all parties will know precisely how compliance testing will be conducted by the agency.

DATES: The amendments made in this rule are effective as of September 1, 1992, except for the amendment to S4.1.3, which takes effect April 30, 1990. The incorporation by reference of certain publications listed in the regulations is approved by the Director

of the *Federal Register* as of September 1, 1992.

Any petitions for reconsideration of this rule must be received by NHTSA no later than May 30, 1990.

ADDRESSES: Any petitions for reconsideration should refer to Docket No. 87–02; Notice 2 and be submitted to: Administrator, NHTSA, 400 Seventh Street SW., Washington, DC 20590.

FOR FURTHER INFORMATION CONTACT: Dr. Richard Strombotne, Chief, Crashworthiness Division, NHTSA, NRM–12, room 5320, 400 Seventh Street SW., Washington, DC 20590 (202–366–2264).

SUPPLEMENTARY INFORMATION: Federal Motor Vehicle Safety Standard No. 210, *Seat Belt Assembly Anchorages* (49 CFR 571.210) sets forth performance requirements for safety belt anchorages to ensure their proper location for effective occupant protection and to reduce the likelihood of the anchorage's failure in a crash. The requirements of the standard, which applies to passenger cars, trucks, buses, and multipurpose passenger vehicles, establish zones within the vehicle where an anchorage must be located and the forces that an anchorage must be capable of withstanding during a static strength test.

BL Technology, Ltd., General Motors, and Mercedes-Benz each petitioned the agency to amend different aspects of Standard No. 210. Additionally, NHTSA's experience conducting its compliance testing under Standard No. 210 indicated a need to modify or clarify some aspects of the standard. Accordingly, the agency published a notice of proposed rulemaking (NPRM) on February 3, 1987 (52 FR 3293).

NHTSA received 28 comments in response to this NPRM. All of these comments were considered while formulating this final rule, and the most significant comments are addressed below. This preamble uses the same organization as the NPRM's preamble, to aid the reader in comparing the two documents.

I. Anchorage Strength Test Procedures

Standard No. 210 uses a laboratory test instead of a crash test to measure the strength of safety belt anchorages. In a laboratory, or "static" test, forces are slowly applied to the anchorages for a period of up to 30 seconds. In a crash, or "dynamic" test, forces are quickly applied and last for less than a second. Standard No. 210 currently specifies the minimum loads that the anchorage must withstand in a laboratory test, the maximum rate of increase in applying that load tc the anchorage, and a minimum period of ten seconds during which the anchorage must withstand the specified load.

BL Technology, Ltd. (BL) filed a petition asking the agency to amend Standard No. 210 to harmonize the anchorage strength test procedure with the Economic Commission for Europe (ECE) Regulation No. 14 on safety belt anchorages. The ECE regulation uses a non-crash static or quasi-dynamic test procedure to evaluate the strength of the anchorage. Although the ECE regulation requires anchorages to be subjected to virtually the identical load as does Standard No. 210, the ECE regulation specifies a load application rate of "as fast as possible" for the anchorages and a much shorter period during which the anchorage must withstand the load. BL argued that adopting the ECE test procedure would reduce vehicle weight and cost. More specifically, BL said that additional welds and reinforcing brackets are necessary on a vehicle to allow its anchorages to withstand the 10 second load duration of Standard No. 210, but such structural reinforcement is not required to meet the 0.2 second load duration of ECE Regulation No. 14. BL also argued that the static test procedure of Standard No. 210 is not representative of real world crash conditions.

In response to this petition, the agency acknowledged in the NPRM that the static test procedure of Standard No. 210 imposes a load for a longer period of time on an anchorage than is imposed in a real crash or a crash test. The agency also acknowledged in the NPRM that metal structures can withstand greater forces under dynamic loading than under static loading. This means that an anchorage that fails at a given force level under the static loading conditions of Standard No. 210 would not necessarily fail if exposed to that same force level under dynamic loading conditions. To this extent, then, NHTSA agrees with BL's assertion that Standard No. 210's test procedure is not representative of actual crashes.

However, NHTSA was concerned that a potential reduction in safety could result from adopting BL's request to harmonize Standard No. 210's anchorage requirements with those of ECE Regulation No. 14. Because metals can withstand larger force levels under dynamic loading than under static loading, a decision to retain the same force levels but shift from static loading to dynamic loading would allow the use of metals of lesser strength for the anchorage. However, this possibility could be avoided if such a decision were accompanied by a decision to increase the ultimate test load the anchorage is required to withstand or to require the safety belt/anchorage system to meet other occupant crash protection requirements To more fully explore this topic, the NPRM solicited comments on three possible changes to the anchorage strength requirements. The agency stated in the NPRM that, based on its evaluation of the comments received on the NPRM and on its continuing assessment of test data from the New Car Assessment Program (NCAP) and other crash tests, NHTSA would determine whether changes in the anchorage test procedures or anchorage load requirements were appropriate or necessary.

A. Exclusion of Anchorages for Dynamically Tested Manual Belt Assemblies From the Strength Requirements

In comments on other rulemaking actions addressing the dynamic testing of manual belt assemblies, a number of vehicle manufacturers had requested that the anchorages for dynamically tested manual safety belt assemblies be excluded from the strength requirements of Standard No. 210. These manufacturers argued that requiring a safety belt system to meet the injury criteria of Standard No. 208 measured on test dummies in a crash test is sufficient assurance that vehicle occupants will be adequately protected in a real-world crash. In the NPRM, NHTSA sought comments on whether this argument was persuasive, or whether the strength requirements ought to be retained to assure adequate protection for occupants larger than the 50th percentile adult male (the size of the test dummy used in crash testing) or to assure adequate protection after the anchorage is exposed to corrosion or other forms of potential anchorage weakening over the vehicle's life.

In response to this request for comments, nine commenters (Volvo, Austin, Chrysler, Ford, GM, Fiat, Toyota, Mazda, and the Motor Vehicle Manufacturers Association) stated that anchorages for dynamically tested belt assemblies should be excluded from Standard No. 210's strength requirements. Mercedes-Benz commented that anchorages for dynamically tested belt assemblies should *not* be excluded from Standard No. 210's strength requirements. According to this comment, the strength requirements for anchorages of dynamically tested safety belt assemblies help assure effective protection for occupants in crashes with impact speeds greater than 30 mph and

occupants whose properties exceed those of the 50th percentile adult male.

After reconsidering this issue, the agency has decided to maintain the current requirement that the anchorages for dynamically tested safety belts are subject to the anchorage strength requirements of Standard No. 210. First, NHTSA believes that the strength requirements help assure that the safety belt assembly and anchorage will afford effective protection under conditions more severe than those for dynamic testing (i.e., occupant larger than 50th percentile adult male, crash speed greater than 30 mph, etc.). Mercedes concurred with this judgment in its comments. On the other hand, none of the commenters that supported an exclusion from the strength requirements for dynamically tested manual belts addressed the need for occupantprotection under conditions more severe than those encountered in the dynamic testing.

Second, the agency believes that the requirements for dynamically tested manual and automatic safety belts should be consistent, at least insofar as the dynamic testing common to both types of safety belts is the basis for the requirement. NHTSA has expressly and consistently stated for more than 10 years that anchorages for automatic safety belts are *not* excluded from the strength requirements of Standard No. 210. *See* the agency's July 26, 1978 interpetation letter to Mr. Toko Iinuma and the July 23, 1980 letter to Mr. M. Ogata. Since the agency has not found the dynamic testing of automatic belts to be a sufficient justification for excluding automatic belt anchorages from the strength requirements of Standard No. 210, it would be inconsistent for the agency to now conclude that the same dynamic testing *is* a sufficient justification for excluding the anchorages for manual safety belts from the strength requirements of Standard No. 210.

Third, the agency continues to believe that a margin of safety in anchorage strength is a reasonable surrogate for corrosion or other forms of potential anchorage weakening that might be encountered over a vehicle's life. General Motors (GM) took issue with this hypothesis in its comments, stating that "the likelihood of a correlation between the results of Standard No. 210 anchorage strength testing and the potential for anchorage weakening is remote." However, GM conceded that it had no data to refute this position. NHTSA did not intend to suggest that anchorages that were stronger when new would be less likely to weaken while in service. However, NHTSA is unaware of, and no commenter tried to offer, any reason why an anchorage with a higher nominal strength than another anchorage when new would not retain a relative strength advantage over the weaker anchorage when both are degraded by factors, such as stress or corrosion, to which anchorages may be exposed while a vehicle is in service.

B. Harmonization With ECE

The NPRM requested comments on revising the strength test of Standard No. 210 to be similar to the requirements of ECE Regulation No. 14. Both Regulation No. 14, and the newer ECE Regulation 14.02, specify anchorage strength requirements, and require an anchorage to be subjected to a load nearly identical to that currently specified in Standard No. 210 (3035 pounds for shoulder belt in ECE vs. 3000 pounds in Standard No. 210, and 5002 pounds for lap belt in ECE vs. 5000 pounds in Standard No. 210). However, the ECE regulations specify that the load be held for 0.2 seconds, as opposed to the 10 second load hold currently specified by Standard No. 210, and that the load be applied "as rapidly as possible," as opposed to the provisions in Standard No. 210 that the load be attained in as little time as possible but in not more than 30 seconds. Since the ECE requirement that the load be applied "as rapidly as possible" would not satisfy the requirement in the National Traffic and Motor Vehicle Safety Act that each safety standard "be stated in objective terms," NHTSA requested comments on retaining the maximum force onset rates currently specified in Standard No. 210 (50,000 pounds per second for lap belts and 30,000 pounds per second for lap/shoulder belts), and that the specified force levels be attained in not more than 5 seconds, compared with the 30 seconds currently specified in Standard No. 210.

Many commenters supported these proposed changes, arguing that these periods for attaining and holding the required loads would be more representative of real world crash situations. Additionally, some of those commenters stated that they have never seen a single anchorage failure on vehicles with anchorages certified to the ECE requirements. While nearly all commenters agreed with the proposal to shorten the time for which the load must be held by the anchorage to 0.2 seconds, Ford, GM, and Jaguar suggested that the 5 second period proposed for attaining the specified load be further shortened. Ford commented that the proposed 5 second period in which to attain the load should be shortened to harmonize with the ECE "as rapidly as possible" requirement. GM commented that the 5 second period in which to attain the specified load would be unrepresentative of loading in crashes, and stated that it appears to be practicable with newer testing equipment to attain the specified load in 1.0 second. Jaguar commented that some newer test equipment can apply the specified load in less than 0.3 seconds, and suggested that the rule should be amended to require the specified loading to be attained in not more than 0.3 seconds. Mitsubishi, on the other hand, supported the proposal to lower to 0.2 seconds the time the anchorage must hold the specified load, but objected to the proposal that the specified loading be attained in 5 seconds. According to this commenter, the proposal to require the specified load to be attained in 5 seconds would necessitate either extensive modifications of existing testing equipment or the purchase and installation of new testing equipment.

NHTSA has carefully reconsidered this subject after reviewing these comments. Safety requirements can evaluate the performance of safety equipment by following two general approaches. These approaches are as follows:

1. The safety requirements can evaluate performance by providing for test conditions that simulate actual crash conditions. The advantage of this approach is that it permits an evaluation of the occupant protection capabilities of all the systems in a vehicle in a single test. To the extent that those systems work synergistically, that synergism will be reflected in the test. Examples of safety standards that use test conditions that simulate an actual vehicle crash are Standard No. 208, *Occupant Crash Protection*, and Standard No. 301, *Fuel System Integrity*. It is obviously imperative that test conditions in these and other safety standards intended to simulate crash conditions actually do so.

2. Alternatively, however, safety requirements can evaluate the performance of vehicle safety equipment by providing for test conditions that are structured to ensure that the safety equipment will perform adequately in actual crash conditions *without* simulating those conditions. Test conditions that do *not* simulate actual crash conditions are developed generally where it would be infeasible or too costly to design and/or implement any single test procedure or series of test procedures that reasonably simulates the conditions to which the safety equipment will be exposed.

including possible crash conditions and possible degradation over time because of exposure to environmental factors. Examples of safety standards that use test conditions *not* intended to simulate an actual vehicle crash are Standard No. 209, *Seat Belt Assemblies,* and Standard No. 210, *Seat Belt Assembly Anchorages.*

The test conditions specified in this latter type of safety requirement are intended to subject the vehicle safety equipment to force or exposure levels that are sufficiently high that one can reasonably conclude that the equipment is unlikely to fail as a result of exposure to even severe crash conditions or environmental exposures. Such test conditions are necessarily more severe than typical crash conditions, to ensure a margin of safety in the standard. That is, even if the test conditions were not directly representative of actual crash conditions, the test conditions are so demanding that one can confidently predict that equipment that withstands the test conditions will withstand most crash conditions, even severe crash conditions.

Hence, it is *not* a telling point to assert that the loading conditions for the anchorage strength test in Standard No. 210 do not simulate actual crashes. These test conditions admittedly do not simulate actual crashes, nor are they intended to do so.

Neither the current Standard No. 210 anchorage strength test procedures nor the ECE Regulation No. 14 anchorage strength test procedures is a close simulation of actual crash conditions. From sled tests, NHTSA has observed that total loading time for safety belts (including the onset of loading, holding the maximum load, and the release of the loading) ranges from about 0.10 to 0.15 seconds). The observed durations for holding the maximum load were generally less than 0.005 seconds. These time periods should be compared with the 30 second period permitted to attain the load and the 10 second period for holding the maximum load specified in Standard No. 210, and the provi'sions in the ECE regulation for attaining the load and holding the load for 0.2 seconds.

Both the load onset (up to 30 seconds) and the load holding times (10 seconds) currently specified in Standard No. 210 are admittedly orders of magnitude greater than the corresponding time periods observed in crashes (not more than 0.15 seconds and less than 0.005 seconds, respectively). However, the load onset ("as rapidly as possible," which was said by a commenter to be as little as 0.3 seconds) and load holding (0.2 seconds) times needed for testing for compliance with the ECE regulation are also substantially greater than the corresponding periods observed in crashes. Thus, neither the anchorage strength test in Standard No. 210 nor the anchorage strength test in the ECE regulation is an accurate simulation of actual crash conditions. Instead, both of these anchorage strength tests represent test conditions intended to be sufficiently demanding to ensure that the anchorage will not fail even under the most severe crash conditions.

As noted in the NPRM and by many of the commenters, the anchorage strength test in the ECE regulation is less stringent than the anchorage strength test in Standard No. 210. Adopting the ECE regulation could allow some slight reduction in vehicle weight and costs for the manufacturer by permitting the manufacturer to omit the additional welds and reinforcing brackets that BL's petition stated are necessary to comply with Standard No. 210, but unnecessary to comply with the ECE regulation. Conversely, the agency has no way of confirming with a reasonable degree of confidence that there have been no anchorage failures in actual crashes of vehicles certified as complying with the ECE regulation. Thus, the "margin of safety" provided by the ECE regulation can neither be confirmed nor denied.

In addition, NHTSA continues to observe shoulder belt loads in its New Car Assessment Program (NCAP) tests in excess of the 3,000 pound load to which the shoulder belts are subjected in Standard No. 210 compliance testing. The significance of this is that anchorages will be exposed to higher force levels in some real world crashes than in the compliance testing. To help compensate for this, the compliance testing may either be revised to specify higher force levels or the compliance testing may specify that anchorages shall be subjected to its loads for a longer duration. Standard No. 210's anchorage strength test currently uses this latter approach.

In its comments, Mercedes stated that it had not seen belt loads as high as those recorded in the agency's NCAP test data. Mercedes hypothesized that the technique used for measuring the belt loads in NCAP tests may produce spurious data. To investigate whether such potential error existed in the NCAP test data, NHTSA retrieved and analyzed the digitized shoulder belt transducer signals from three different automobiles in which shoulder belt loads in excess of 3,000 pounds were recorded. These three cars were a 1981 Toyota Cressida, a 1984 Ford Mustang, and a 1986 Oldsmobile Toronado. The shoulder belt loads recorded for the driver and passenger shoulder belts were plotted as a function of force versus time. If the shoulder belt loads were the result of spurious signals being recorded, that would be expected to show up as inconsistencies between the graphs plotted for the passenger and driver positions in the same vehicle. However, no such inconsistencies were shown on these data graphs. Therefore, the agency has no evidence to support Mercedes' hypothesis that the NCAP data are unreliable. To the contrary, NHTSA's reexamination of the NCAP data leads to the conclusions that the data on belt loads in 35 mile per hour crash tests with 50th percentile male dummies are properly measured and recorded, and that some of the belt loads observed in those tests exceed the 3,000 pound forces to which lap/shoulder belt anchorages are subjected during the compliance testing for Standard No. 210.

NHTSA has decided not to reduce the "margin of safety" currently required for anchorage strength, even to the ECE level. The current anchorage strength test effectively requires vehicle manufacturers to use additional reinforcements at the anchorage points, as compared with what is needed to satisfy the anchorage strength test in the ECE regulation. There is no question that these additional reinforcements are feasible and practicable, since manufacturers have been doing so for more than 20 years. The agency has considered whether the costs and other burdens associated with these reinforcements are excessive in relation to the benefits resulting from these reinforcements. NHTSA estimates that the additional reinforcement typically adds about 4 to 8 ounces of steel at a cost of approximately one dollar per vehicle. Although NHTSA cannot quantify the safety benefits or the actual margin of safety attributabe to the additional reinforcements, the agency believes it would be inappropriate to *potentially* reduce the safety protection afforded to vehicle occupants to achieve such minimal cost savings. Thus, this rule does not make any change to the load onset or load holding times for the anchorage strength test in Standard No. 210.

1. Harmonization of Lap Belt Mounting Angles

Standard No. 210 currently includes a minimum and maximum mounting angle for lap-only safety belts and for the lap belt portion of lap/shoulder belts. The minimum mounting angle requirement reduces the possibility of occupant submarining. Occupant submarining

occurs when an occupant slides forward and under the safety belt during a crash. The possibility of occupant submarining increases as the belt angle approaches the horizontal, that is, as the measured belt angle with the horizontal decreases. The potential hazard of submarining is that occupants may suffer abdominal injuries as they slide under their belts.

Standard No. 210 currently specifies a minimum lap belt angle of 20 degrees above the horizontal, measured from the seating reference point to either the anchorage or the point where the safety belt contacts the seat frame. The ECE regulation specifies a minimum lap belt angle of 30 degrees. Since the ECE 30 degree minimum would enhance safety, by reducing the risk of occupant submarining, the NPRM proposed to adopt a 30 degree minimum in Standard No. 210.

Four of the commenters supported the proposal to require a minimum lap belt angle of 30 degrees. These four were Chrysler, Volvo, Volkswagen, and BMW. On the other hand, twelve commenters (Mitsubishi, Honda, Austin Rover, Fiat, Ford, Hino, GM, Toyota, Jaguar, Nissan, Mazda, and Subaru) opposed this proposed change for several reasons. GM commented that "the interrelationship of factors that can contribute to occupant submarining in vehicle crashes is not fully understood." Both Ford and Hino commented that occupant submarining depends on factors other than belt angle.

NHTSA agrees with Ford and Hino that factors other than belt angle, including characteristics of the safety belt webbing, the seat, the occupant, and the type and direction of the crash itself, affect the likelihood of occupant submarining. NHTSA also agrees with GM that the interrelationship of these factors is not fully understood. However, even though other factors can affect the likelihood of occupant submarining and even though the interrelationship of these factors is not yet quantified, the available data show that increasing the minimum lap belt angle will decrease the likelihood of occupant submarining. If all of the other factors that influence submarining are held constant and only the angle of the lap belt is changed, the angle of the lap belt in relation to the constraining forces will greatly affect the likelihood that the belt will ride over the iliac crest (the pelvic bone) in a crash. Too shallow a belt angle results in insufficient downward force to resist the upward motion of the lap belt that results from restraining an occupant in any crash. Since an increase in the minimum lap belt angle from 20 to 30 degrees would reduce the likelihood of occupant submarining, and thereby enhance occupant safety, the fact that other factors might also enhance occupant safety does not seem a compelling reason for not requiring an increase in the minimum lap belt angle.

A number of commenters stated that the ECE regulation requires a minimum lap belt angle of 30 degrees *only* in passenger cars, and even for those vehicles *only* in the front seats. Otherwise, the ECE regulation specifies a minimum lap belt angle of 20 degrees. These commenters suggested that NHTSA should harmonize precisely with the ECE regulation if this rulemaking was to achieve its stated intent.

NHTSA's intent in this and all of its other efforts to harmonize this agency's regulations with those of other nations is to eliminate needless differences between international regulatory requirements applicable to vehicles. However, differences that reflect differing conclusions about the safety need for particular regulatory requirements are not what NHTSA considers to be needless differences.

In this case, NHTSA believes that the available data suggest the desirability of establishing a minimum lap belt angle of 30 degrees for all seating positions, irrespective of the fact that ECE specifies a minimum 30 degree lap belt angle only for front seats in passenger cars. NHTSA test data have shown that the occurrence of occupant submarining is diminished as the lap belt angle is increased. ("Rear Seat Submarining Investigation," DOT HS 807-347, May 1988). Conversely, none of the available data suggest that, all other factors being held constant, the likelihood of occupant submarining in response to a shallow belt angle is any less for rear seat than front seat occupants. To the contrary, the lower pelvis-to-heel position of many rear seat occupants may increase the chance of submarining. The agency does not understand the commenters to be making such an assertion. Instead, NHTSA understands the commenters to be suggesting that the other factors that affect the likelihood of occupant submarining are not constant between the front and rear seat of vehicles. Because adjustments to the other factors can be made to compensate for the lesser lap belt angle, the commenters appear to be suggesting that the likelihood of occupant submarining in the rear seat with a lesser lap belt angle with compensating adjustments to other factors is no more than the likelihood of occupant submarining in the front seat with a greater lap belt angle and no compensating adjustments to other factors.

Even if this suggestion were correct and adjustments could be made to counteract the effects of a lap belt angle less than 30 degrees in the rear seat, NHTSA does not believe this is a persuasive reason to permit a lesser lap belt angle in rear seating positions. In such situations, the likelihood of occupant submarining could be even further reduced by increasing the lap belt angle to 30 degrees or more in those rear seats *together with* the compensating changes to other factors identified by the vehicle manufacturer. Since occupant submarining can result in abdominal injuries for belt users, NHTSA believes it is appropriate to take measures to reduce the likelihood of occupant submarining as much as possible. Therefore, this rule specifies a minimum lap belt angle of 30 degrees in all seating positions.

The maximum lap belt mounting angle requirement in Standard No. 210 affects the forward excursion of an occupant in a crash. The probability of forward excursion increases as the belt angle approaches the vertical (i.e., as the belt angle increases) because the safety belt will rotate about the anchorage before it begins to resist the crash forces. The likelihood of occupant contact with vehicle surfaces, and, therefore, the likelihood of occupant injury, increases as the amount of occupant excursion increases.

Standard No. 210 currently specifies a maximum lap belt angle of 75 degrees, measured from the seating reference point to either the anchorage or the point where the safety belt contacts the seat frame. The ECE regulation permits a maximum lap belt angle of 80 degrees. The NPRM asked for accident and test data on whether increasing the maximum lap belt angle to 80 degrees would significantly increase the forward excursion of belt users. No commenter offered any data in response to this request. Chrysler commented that it had no data on this subject, but that its earlier testing experience showed that occupant excursion may increase with an increase in belt angle. Nevertheless, Chrysler stated that it supported an increase in the maximum lap belt angle to 80 degrees. At least five other commenters suggested that NHTSA should adopt the ECE maximum lap belt angle of 80 degrees, in order to further harmonization.

Harmonization should not result in any lessening of safety protection for vehicles sold in the United States. In this case, all of the available data indicate that occupant excursion increases as the

maximum lap belt angle increases. Hence, a maximum lap belt angle of 75 degrees, instead of 80 degrees, reduces the likelihood of adult occupant excursion and injury. Additionally, a paper prepared for the Society of Automotive Engineers concluded that child safety seats have a greater propensity for excursion than do adult belt users, and that a shallower lap belt angle is needed to ensure protection for occupants of child safety seats; *see* Weber and Radovich, "Performance Evaluation of Child Restraints Relative to Vehicle Lap-Belt Anchorage Location," SAE 870324. Based on a series of 30 mile per hour (mph) sled tests, the Weber and Radovich paper reports that the amount of head excursion for the test dummy in a child safety seat had almost a linear increase with the increase of the lap belt angle. Against this background, NHTSA has no basis for any further consideration of increasing the maximum lap belt angle from the currently-specified 75 degrees.

In summary, the lap belt angle should be optimized below the upper excursion limit of 75 degrees and above the lower submarining limit of 30 degrees. The data available to the agency indicate that lap belts designed with angles within this range should mitigate both of these potential problems. Requirements for lap belt angles to be greater than 30 degrees or less than 75 degrees are outside the scope of this rulemaking. Should additional information become available on this subject, the agency may readdress this subject in a future rulemaking.

2. Anchorage Deformation Limits

While structural deformation of the area around an anchorage can aid in occupant protection by absorbing part of the crash energy, excessive deformation can allow excessive occupant excursion, which would allow a belt user to move forward and contact the vehicle's interior. The only limitation on anchorage deformation currently specified in Standard No. 210 is that the anchorage must not completely separate from the vehicle structure. Anything short of complete separation is permissible. ECE Regulation No. 14, on the other hand, limits the permissible deformation of an anchorage during testing. During the test prescribed in ECE Regulation No. 14, the lap belt anchorages must continue to meet the minimum lateral spacing requirement of the regulation and the upper anchorage for the shoulder belt must remain within the zone specified in the regulation. The agency asked for comments on adopting a similar approach in Standard No. 210.

The idea of limiting the permissible anchorage deformation that occurs during compliance testing was necessarily linked with the proposal to modify the current anchorage strength test specified in Standard No. 210, so that the strength test would attain and impose the load in a manner more representative of actual crash loading. If the loading could be imposed on the anchorage in a way that more closely simulated an actual vehicle crash, limits on the deformation of the anchorage could serve a safety purpose, by helping to ensure that safety belt users would not experience excessive excursion in an actual crash.

As explained above, however, the times during which the load is imposed and held by the anchorage during Standard No. 210 compliance testing is unchanged in this final rule. Because this rule does not reduce the load hold time, NHTSA does not believe there is any practical means of complying with the proposed deformation limit, nor is there any safety need for adding the proposed deformation limit to the standard. Agency compliance testing using the current 10 second load hold time demonstrates that some current designs for anchorages would not comply with the proposed deformation limit. In some compliance tests, deformation has been so severe that the tests had to be interrupted because of excessive instrument travel. The only way for such vehicles to comply with this proposed deformation limit for anchorages would be if much of the vehicle structure supporting the anchorages were redesigned.

It is not clear that, real world safety benefits would be realized sufficient to justify imposing a requirement for major redesign of vehicles. The load imposition and load hold times specified for compliance testing are admittedly not directly representative of actual crash conditions. Since the anchorage strength test is not directly representative of actual crash conditions, it is not clear that imposing new deformation limits for the anchorages during that strength test would enhance occupant safety during actual crash conditions. Moreover, the available accident data do not indicate that current vehicles, which are *not* subject to any limitations on anchorage deformation, pose any significant safety risk to occupants wearing safety belts, as a result of excessive anchorage deformation. This suggests that there is no safety basis for changing the existing regulatory structure. Accordingly, no anchorage deformation limits have been adopted in this rulemaking.

3. Upper Anchorage Location Zone

As noted in the NPRM, Standard No. 210 and ECE Regulation No. 14 specify limits on the zones in which the upper anchorage for the shoulder portion of lap/shoulder belts can be located. The ECE regulation differs from Standard No. 210 in that the ECE regulation permits an anchorage to be located further forward than does Standard No. 210. In fact, the ECE regulation permits the upper anchorage for a shoulder belt to be located in front of an occupant's shoulder.

The NPRM noted that the agency is aware of test data showing that an anchorage positioned in front of an occupant's shoulder can allow increased head movement and thus potentially increase the risk of head injury. The NPRM identified three different studies that supported this conclusion. On the other hand, the NPRM also noted that the agency was aware of one set of test data indicating that the increased head movement from anchorage locations forward of the shoulder may not significantly increase the risk of head injury. The agency sought comments on whether to adopt the upper anchorage location zone specified in the ECE regulation, and stated in the NPRM that it was particularly interested in receiving additional accident and/or test data on the safety effects of permitting anchorages to be located in front of an occupant's shoulder.

No commenter provided any such data in response to this request. Without discussing any potential safety implications, many of the commenters urged NHTSA to harmonize Standard No. 210's requirements with those in the ECE regulation. As explained above, NHTSA cannot take any steps to harmonize its safety standards with other countries' vehicle regulations until the agency has carefully considered the safety consequences of such steps. In this case, the data appear conflicting, but the preponderance of the evidence suggests that permitting the upper anchorage to be located in front of an occupant's shoulder would potentially increase the risk of head injury. Until such time as it is clearly demonstrated that permitting anchorage locations in front of an occupant's shoulder does not pose an increased risk of injury, NHTSA believes it is inappropriate to permit such anchorage locations. Hence, this rule makes no change to the location zone currently specified in Standard No. 210 for upper anchorages subject to the standard's location requirement.

4. Lateral Spacing of Lap Belt Anchorages

Standard No. 210 currently specifies a minimum lateral spacing of 6.5 inches for lap belt anchorages, while the ECE regulation requires a minimum of 13.75 inches lateral spacing for lap belt anchorages. In the NPRM, the agency stated that it recognized that the closer the spacing of lap belt anchorages, the greater the possibility of increased lateral movement by a belt user during an oblique, side, or rollover crash. In addition, NHTSA stated that closer spacing of anchorages could permit increased side loads on an occupant's pelvis. However, the agency acknowledged that it did not have any data indicating that the possible side loads and lateral movement do, in fact, present an increased risk of injury. Thus, the NPRM asked for comments and data on the effect of anchorage spacing on occupant safety.

Fiat and Volvo commented that they would support an amendment of Standard No. 210 to adopt the ECE anchorage spacing requirement, although neither commenter provided any data to support such an amendment. Fiat repeated the agency's assertion that close spacing of lap belt anchorages could permit increased side loading. Volvo asserted that wider spacing of lap belt anchorages would enable the lap belt to "better secure child safety seats," but did not explain why this would be so. NHTSA assumes that Volvo was alluding to the issue of sideward excursion that was noted in the NPRM for adult users of the safety belt.

On the other hand, several commenters suggested that there was no need to change the existing lap belt anchorage spacing requirement. GM commented that further study is needed before considering any changes. Similarly, Navistar commented that the agency should have sound data before making any change to the anchorage spacing requirements. Blue Bird commented that the ECE 13.75 inch spacing for lap belt anchorages would "be difficult to accomplish" for school bus seats, because those seats are generally designed to allow 13.0 inch rump room for passengers. Chrysler commented that there are no data showing a safety need to increase the anchorage spacing from the 6.5 inches that has been specified for the past 20 years. Ford also commented that there were no safety data showing the need for a change, and added that a requirement for 13.75 inch anchorage spacing would require a redesign in current vehicles with center seating positions.

NHTSA agrees with the commenters that stated that there should be a sound safety basis for a requirement that will force manufacturers to change vehicle designs, particularly when such designs have been expressly permitted by the safety standards for the preceding 20 years. With respect to lap belt anchorage spacing, there are three possible safety considerations that could serve as a basis for increased anchorage spacing. First, closer spacing could permit increased lateral movement in an oblique, side, or rollover crash. Even accepting this as true, NHTSA is unaware of any data, from either laboratory testing or real world crashes, that indicate a serious risk of injury as a result of this increased lateral movement. Given the number of vehicles that have used anchorage spacing narrower than is specified by ECE, especially at center seating positions, it seems reasonable to conclude that the absence of any data to the contrary shows that the anchorage spacing currently specified in Standard No. 210 does not permit any serious risk of injury to motor vehicle occupants as a result of lateral movement in crashes. Second, closer spacing of lap belt anchorages could create injurious inward sideloading on the pelvis of the occupant during a frontal crash. However, the agency's examination of accident data and studies indicate that, to the extent belt users experience pelvic injuries like hip dislocations and fractures, those injuries are the result of the crash forces driving the occupant's knee back into the hip, *not* the safety belt loads being applied directly to the hip. *See, e.g.,* Otte, Dietmar, "Residual Injuries to Restrained Car Occupants in Frontal and Rear Seat Positions," Accident Research Unit, Hannover, West Germany (May 1987). This being the case, there is no reason to believe that a regulatory change to reduce potential inward belt loading on the pelvis, by mandating the wider anchorage spacing in the ECE regulation, would achieve any significant reduction in the number of pelvic injuries to occupants. Third, the possibility of submarining was investigated in a research study (Leung, C.Y., *et al.,* "Submarining Injuries of 3 Point Belted Occupants in Frontal Collisions—Description, Mechanisms, and Protection," SAE 821158). After a series of tests, the Leung study found that the likelihood of occupant submarining decreases as the lap belt anchorage spacing decreases. Hence, adopting the wider anchorage spacing specified in the ECE regulation would not reduce the likelihood of occupant submarining.

NHTSA also notes that the narrower spacing requirement in Standard No. 210 gives manufacturers more design latitude than the corresponding ECE requirement. Manufacturers that wish to certify compliance with the anchorage spacing requirements in both Standard No. 210 and the ECE requirements can do so by merely spacing the anchorages in its vehicles more widely than the ECE's minimum 13.75 inches.

Since the agency is not aware of evidence showing any significant safety benefits that would be associated with the ECE lap belt anchorage spacing requirements, and adopting the ECE lap belt minimum anchorage spacing requirements would impose some additional costs by requiring modifications to some existing vehicle designs, this rule does not make any changes to the minimum lap belt anchorage spacing requirements currently specified in Standard No. 210.

5. Simultaneous Testing of Anchorages

Standard No. 210 currently requires that all *floor-mounted* anchorages for *adjacent* designated seating positions be tested simultaneously for anchorage strength. ECE Regulation No. 14 requires that *all* anchorages common to a single seat assembly, whether floor-mounted or mounted on the seat frame, be tested simultaneously. This ECE requirement ensures that the anchorages for all *three* seating positions on a standard passenger car bench seat will be tested simultaneously. In the NPRM, the agency noted that the requirement in the ECE regulation is more representative of a real-world crash in which all seating positions are occupied. Accordingly, the agency proposed to adopt a requirement that all anchorages common to one seat be tested simultaneously.

Five commenters addressed this proposal. Three of the commenters (Volvo, Austin Rover, and Chrysler) supported the proposal for the reasons set forth in the NPRM. Ford also commented that it supported the proposal, but asked for some clarification of the relationship between the compliance testing for Standard No. 210 and that specified in Standard No. 207, *Seating Systems* (49 CFR 571.207). Section S4.2(c) of Standard No. 207 provides that, if the seat belt assembly is attached to the seat being tested, the forces specified for Standard No. 207 compliance testing shall be applied simultaneously with the forces specified for Standard No. 210 compliance testing of the seat. Ford asked that Standard No. 210 be amended to provide that the

Standard No. 207 compliance test forces be applied simultaneously with those of Standard No. 210. No such change has been made, because Standard No. 207 already contains a provision for simultaneous testing. Therefore, NHTSA does not believe a conforming cross-reference in Standard No. 210 is necessary. Ford also asked that Standard No. 207 be amended to provide that a seat that has been subjected to the simultaneous loading need not pass any further seat loading tests. Whatever the merits of this request, it is outside the scope of this rulemaking action.

Blue Bird, a manufacturer of school buses, commented that a requirement for simultaneous testing of all anchorages common to one seat assembly, regardless of whether the anchorages were mounted on the vehicle floor or the seat frame, "would be extremely difficult and expensive to meet." Blue Bird "strongly requested" that a requirement for simultaneous testing of all anchorages for any given seat assembly be carefully studied and the safety need conclusively established before making this requirement applicable to passenger seats on school buses.

Section S4.1.2 of Standard No. 210 provides that school buses with a gross vehicle weight rating (GVWR) of more than 10,000 pounds are *not* required to have anchorages installed for the passenger seats. Any anchorages that are installed for passenger seating positions in those school buses would be purely voluntary, and not in response to any regulatory requirement. Thus, any anchorages for safety belts that are installed on the passenger seats in large school buses are not subject to any of the anchorage requirements specified in Standard No. 210.

This is not the case for anchorages installed for the passenger seats in school buses with a GVWR of 10,000 pounds or less. Those seats are required by section S5(b) of Standard No. 222, *School Bus Passenger Seating and Crash Protection* (49 CFR 571.222) to comply with the requirements of Standard No. 210 as those requirements apply to multipurpose passenger vehicles. Accordingly, S4.1.2 of Standard No. 210 requires that anchorages for either a lap-only belt or a lap/shoulder belt be installed for each passenger seating position in small school buses. Thus, a forward-facing bench seat on a small school bus that has three passenger seating positions would be tested by simultaneously loading the anchorages for all three of those passenger seating positions.

NHTSA believes it is appropriate to require simultaneous testing of anchorages for the passenger seats in small school buses for a number of reasons. First, a requirement for simultaneous testing of passenger seat anchorages is more representative of real world crash conditions with all seating positions occupied for small school buses, just as the simultaneous testing requirement is more representative of real world crash conditions with all seating positions occupied in passenger cars and light trucks.

Second, the failure to require simultaneous testing of anchorages for the passenger seats in small school buses would erode the level of safety protection afforded to passengers in those small school buses. The agency based its recent decision to exempt small school buses from the requirements for rear seat lap/shoulder belts by explaining that occupants in small school buses have the occupant protection of *both* lap-only safety belts and compartmentalization; 54 FR 46257, at 46260–46261, November 2, 1989. If the anchorages for the lap belts at the passenger seating positions were now to be exempted from the simultaneous anchorage strength testing requirement, the passengers in small school buses might not have the occupant protection of lap-only safety belts in situations where all the positions on a seat were occupied. The agency believes that occupants of small school buses need the protection of *both* safety belts and compartmentalization for effective occupant protection in these lighter vehicles.

Third, NHTSA believes it is feasible and practicable for manufacturers of small school buses to design passenger seats and anchorages that can withstand simultaneous testing of anchorages under Standard No. 210 *and* exhibit the force deflection characteristics specified for compartmentalization under Standard No. 222. Engineering principles suggest that one could design the legs of the seat to sustain the anchorage strength test load, if the anchorages were mounted on the seat, and design the seat back to deform according to Standard No. 222's deflection requirements. Additionally, agency testing has confirmed that some existing van seats with anchorages mounted on the seats comply with Standard No. 210's anchorage strength requirements when all the seat-mounted anchorages were tested simultaneously.

Additionally, this rule clarifies the existing requirement for simultaneous testing for all "adjacent" designated seating positions. The term "adjacent" is imprecise. For example, "adjacent" could be misinterpreted as specifying simultaneous testing for front and rear outboard seating positions on the same side of the vehicle, or it could be misinterpreted as specifying simultaneous testing for bucket seats in the front that are not separated by a console or some other structure. This rule more precisely expresses the agency's intention by deleting the reference to simultaneous testing of "adjacent" designated seating positions, and substituting a requirement for simultaneous testing of all designated seating positions that face in the same direction and are common to the same occupant seat.

C. Limitation on Anchorage Movement During Static Test

The NPRM also proposed an alternative under which the static testing requirements in Standard No. 210 would be retained, but some limitations on anchorage movement during that testing would be added. For the reasons explained above in the discussion of adopting the ECE limitations on anchorage deformation, NHTSA has decided not to adopt any limitations on anchorage deformation during the testing specified in Standard No. 210. Hence, this alternative proposal for anchorage deformation limits is not adopted in this final rule.

II. Automatic Belt Anchorage Strength

In the NPRM, NHTSA proposed to clarify the strength requirements for anchorages for automatic belts. The agency noted that its interpretations have long stated that anchorages for automatic belts are required to meet the strength requirements set for the anchorages for manual lap/shoulder safety belts, instead of the strength requirements set for the anchorages for manual lap-only safety belts. The notice proposed to expressly incorporate this interpretation into the standard.

Several manufacturers commented that anchorages for automatic belts should be exempted from the strength requirements of Standard No. 210. NHTSA did not propose such a change, because NHTSA does not believe such a change would advance the interests of safety. For the same reasons set forth above in explaining why this rule does not exempt from the strength requirements the anchorages for dynamically tested manual belts, the agency believes it would be similarly inappropriate to exempt the anchorages for automatic belts from the strength requirements of Standard No. 210. As proposed, the specific strength requirements adopted in this rule for automatic belt anchorages are the same

requirements that currently apply to anchorages for manual lap/shoulder safety belts.

III. Deletion of Manual Belt Anchorages for Automatic Belt Vehicles

Section S4.1.1 of Standard No. 210 currently requires anchorages for manual lap/shoulder safety belts to be installed for all front outboard seating positions in passenger cars. Section S4.1.4 of Standard No. 208, *Occupant Crash Protection* (49 CFR 571.208), requires that front outboard seating positions in passenger cars manufactured on or after September 1, 1989 be equipped with automatic crash protection. (The front outboard passenger's seating position in these cars may be equipped with a dynamically tested manual lap/shoulder safety belt if the driver's position is equipped with an air bag and the car is manufactured before September 1, 1993.) NHTSA has expressly exempted the anchorages for automatic or dynamically tested manual safety belts from the anchorage location requirements in Standard No. 210. Thus, the anchorages to which automatic or dynamically tested manual safety belts originally installed in a vehicle are attached are not required to comply with the location requirements of Standard No. 210.

However, if the anchorages for any automatic or dynamically tested manual safety belts originally installed at a front outboard seating positions in a passenger car do not comply with the location requirements of Standard No. 210, the standard provides that anchorages for a manual lap/shoulder belt that comply with the anchorage location requirements must also be installed at that seating position. NHTSA justified this requirement for seemingly redundant anchorages by explaining that this requirement would allow owners to replace damaged automatic belts with manual lap/shoulder belts if they so desired.

The agency reexamined this requirement in response to a petition for rulemaking on this subject submitted by GM. This reexamination led the agency to propose to delete the requirement for complying anchorages to be provided at seating positions originally equipped with safety belts that did not make use of anchorages within the locations permitted in Standard No. 210 (i.e., automatic or dynamically tested manual safety belts). This proposal reflected the agency's tentative conclusions that:

a. NHTSA is unaware of any widespread demand for alternative types of belt systems when replacing damaged safety belts. Instead, the agency anticipates that consumers would opt to simply have a replacement safety belt system installed similar to the belt system with which the car was originally equipped. Hence, the potential benefits of a requirement for redundant anchorages would accrue very infrequently, if ever.

b. It is possible that a manual lap/shoulder safety belt would not provide adequate occupant protection at a seating position originally equipped with automatic or dynamically tested manual safety belts. For instance, the manufacturer might install an automatic or dynamically tested manual belt system that had particular elongation patterns or limited webbing spoolout, so as to adapt the safety belt system to the needs of that particular seating position. A manual lap/shoulder belt that complied with the general requirements of Standard No. 209 might not have the same attributes as the original belt system. In this case, use of a different type of belt system than that with which the vehicle was originally equipped could lessen the crash protection afforded to occupants of the car.

The NPRM took care to emphasize that this proposal would not affect the requirement in section S7 of Standard No. 210 that anchorages for a manual lap belt must be installed at the front right seating position if the automatic crash protection system cannot be used to secure a child seat and if a manual lap-only or lap/shoulder belt is not installed at that seating position. In those instances, anchorages for a manual lap belt ensure that a child seat can be properly secured at the right front seating position. NHTSA did not propose to amend that requirement.

All of the commenters that addressed this issue supported the proposed deletion of the requirement for redundant anchorages. This final rule adopts the proposed deletion of the requirement for those redundant anchorages. Additionally, since this relieves an obligation that requires vehicles to have unnecessary equipment that might result in lesser occupant protection, NHTSA finds for good cause that this deletion should be effective immediately upon publication of this rule in the **Federal Register**.

IV. Test Anchorage With Seat in Its Rearmost Position

Mercedes Benz filed a petition asking the agency to revise the seat location requirement currently specified to determine if the upper anchorage for a lap/shoulder safety belt complies with the anchorage location requirements of Standard No. 210. The standard currently provides that the determination will be made with the seat in its full rearward and downward position and with a two dimensional manikin positioned with its torso line at the same angle from the vertical as the seat back and with its "H" point located at the seating reference point. (The "H" point simulates the location of the hip joint, and the seating reference point is the manufacturer's design reference point that determines the rearmost normal driving position of the seat.) Mercedes' petition asserted that vehicles with extended seat track travel would have a seating reference point several inches forward of the seat back of an adjustable seat adjusted to its rearmost position.

Mercedes filed another petition asking the agency to revise the definition of "seating reference point" in 49 CFR 571.3. This petition and the effects that a revision of the definition of "seating reference point" would have on compliance with the safety standards other than Standard No. 210 are being addressed in a separate rulemaking action. *See* 51 FR 20536; June 5, 1986.

Both in that separate rulemaking action and in the NPRM for this rule, NHTSA explained that the agency believes that positioning of the seat for the purposes of determining a vehicle's compliance with the upper anchorage location requirements of Standard No. 210 should be treated differently than the positioning of the seat for other standards or the positioning of the seat to determine a vehicle's compliance with the minimum and maximum lap belt mounting angles. As explained above, NHTSA wants to ensure that the upper anchorage of a lap/shoulder belt cannot be positioned significantly in front of an occupant's shoulder, because such a positioning could allow increased head movement and increased risk of injury. To ensure that upper anchorages will not be positioned significantly forward of an occupant's shoulder, NHTSA believes it is appropriate to adjust the seat to its most rearward position to determine if the vehicle complies with the upper anchorage location zones specified in Standard No. 210.

In the NPRM for this rule, NHTSA stated that it would use the "existing seating reference point" to determine whether a lap belt or the lap belt portion of a lap/shoulder belt meets the minimum and maximum mounting angle requirements in Standard No. 210. The NPRM acknowledged that the seating adjustment position in which the existing seating reference point is determined "may not be the rearmost position." If the seating reference point

is defined with the seat in some position other than the rearmost, the current requirement in S4.3.2 of Standard No. 210 for determining compliance with the upper anchorage location requirements (the seat in its full rearward position *and* the manikin's "H" point at the seating reference point) appears to allow the upper anchorage to be positioned significantly forward of an occupant's shoulder, notwithstanding NHTSA's repeated statements that it wants to prohibit such anchorage locations.

The reason for this apparent anomaly is that the seating reference point simultaneously defines two dependent variables. These variables are:

1. The adjustment position of the seat (rearmost *normal* driving or riding position), *and*

2. The location of the manikin's "H" point relative to the seat cushion and the seat back.

The anomaly in Standard No. 210 arises because the standard attempts to use the seating reference point to define only one of these variables (the location of the manikin's H point) and to establish a definition for the other variable different than that which is specified for the seating reference point (the adjustment position of the seat). Specifically, section S4.3.2 of Standard No. 210 refers to the seating reference point as the location for the manikin's "H" point, while specifying a seat adjustment position (full rearward and downward position) different from that which is specified for the seating reference point.

In those vehicles in which the seating reference point is determined when the seat is adjusted to a position *forward* of the rearmost seat adjustment position, the seating reference point would be located several inches forward of where the seat back would be located when the seat is in the rearmost position. When the procedures of Standard No. 210 for positioning the two dimensional manikin with its torso line at the same angle from the vertical as the seat back and its "H" point located at the seating reference point are followed for such vehicles, the result is that the manikin's torso line is located not tangent to, but several inches *forward* of and parallel to the seat back. The acceptable upper anchorage location zone shown in Figure 1 of Standard No. 210 would also move forward several inches to correspond to this manikin positioning. While the resulting anchorage location would be suitable when the seat is adjusted so that it is at or forward of the seating adjustment position in which the seating reference point was determined, the location might be unsuitable when the seat is adjusted so that it is to the rear of that seating adjustment position.

To eliminate the potential for confusion, this rule deletes the existing requirement in S4.3.2 that the manikin's "H" point be located at the seating reference point. As proposed in the NPRM, this rule substitutes a requirement that the manikin's "H" point shall be at the "design H point of the seat in that seating position, as defined in SAE Recommended Practice J1100 (June 1984)." Unlike the seating reference point approach which establishes the location of the manikin's "H" point at only one seat adjustment position, the "design 'H' point" approach can be used to establish the location of the manikin's "H" point at *any* seat adjustment position. Section S4.3.2 continues to specify the same seat adjustment position, i.e., the seat must be in the full rearward and downward position.

V. Compliance Test Equipment

The NPRM described the Standard No. 210 compliance testing problems the agency had experienced. NHTSA stated that the problems resulted mainly from excessive side loads induced by the body block used in the test procedure to simulate the human torso. However, other problems were attributed to belt webbing elongation, deformation of the vehicle structure, and lack of adequate distance to pull the body block in smaller vehicles. NHTSA proposed some changes specifically to address these testing problems.

A. Use of Cables

At present, Standard No. 210 implies that the safety belt assemblies installed in the vehicle will be used during compliance testing to transfer the test load from the body block to the anchorage. To reduce testing problems that result from the interaction between the safety belts and the test equipment, the agency proposed to use cables (wire rope) instead of the vehicle's safety belts for compliance testing. Before proposing this change, NHTSA conducted a test program showing that Standard No. 210 compliance testing results using cables were comparable to the testing results obtained using the vehicle's safety belts.

Nearly all of the commenters that addressed this proposal opposed a change to the exclusive use of cables instead of safety belt webbing. Some commenters alleged that cables would concentrate the specified loading over a much smaller area than would occur if the loading were applied by the webbing of the safety belt installed in the vehicle. Because of this concentrated loading, these commenters alleged that loading imposed by means of cables would be so unrepresentative of loading imposed by safety belt webbing that cables should not be used for compliance testing. Other commenters, including Mercedes, suggested that the proposed use of cable instead of webbing would have only minor effects on the test results. However, these commenters suggested that the standard should permit the optional use of either cables or safety belt webbing for compliance testing. Further, some other commenters, including Chrysler, suggested that the agency could achieve its aim of reducing the number of compliance tests that cannot be completed without introducing the more concentrated loading that would result from the use of cable. These commenters recommended that Standard No. 210 specify the use of high strength, low elongation safety belt webbing for its compliance tests.

NHTSA was aware that connecting the cables directly to the anchorage being tested could produce loading on the anchorages that might be unrepresentative of loading that would result if the same force levels were applied to the anchorages by means of webbing. The proposal was not intended to result in compliance testing where the cables would be connected directly to the anchorage fixture. Instead, NHTSA intended to use an adapter plate to connect the cables to either the attachment hardware or the webbing of the belt system installed in the vehicle. This adapter plate would have the same geometry as a D-Ring on a belt system, and would have distributed the load evenly across the width of the webbing or the attachment hardware. The agency believes that the commenters' assertion of unrepresentative loading was based upon a misunderstanding of the proposal.

The proposal to use cables for compliance testing was intended to ensure that the results of those tests would be determined by the properties of the anchorage fixtures being tested, and that those tests would not have to be terminated before completion because of the properties of the safety belt systems installed in the vehicles. This intent can be effectuated by substituting any high strength, low elongation material for the webbing of the vehicle's safety belts in situations where prior experience indicates that the original equipment belt webbing will fail during compliance testing. NHTSA is using the term "high strength" to refer to any material that is stronger than the maximum load imposed during the compliance test. The term "low

elongation" means a material that has no more stretch over the range of loads specified in compliance testing than typical original equipment polyester safety belt webbing. Typical polyester belt webbing has a breaking strength of approximately 7,000 pounds and an elongation of seven percent when subjected to a 2,500 pound load. NHTSA does not believe that cables would better serve the agency's purposes than any other high strength, low elongation material, such as chains or polyester belt webbing. Similarly, NHTSA believes that any high strength, low elongation material will produce comparable test results to the results that would be obtained using cables.

The agency agrees with the commenters that compliance testing should not result in unrealistic loading for the anchorages. To ensure realistic loading of the anchorages, the NPRM proposed to expressly provide in Standard No. 210 that the load would be transmitted to the anchorages by means of the original equipment safety belt attachment hardware in the vehicle. This proposal was intended to ensure that the anchorage loading during compliance testing would be identical to that which would be experienced by the anchorages if the compliance testing were conducted with the original equipment safety belt system in its entirety. To further ensure that the loading imposed during compliance testing is a realistic simulation of actual anchorage loading, this rule specifies that the material used to apply the load to the anchorages in compliance testing, whether it be cables, chains, or webbing, be equal to or greater in strength than the original equipment webbing and that the material used to apply the load to the anchorages shall duplicate the geometry of the original equipment webbing at that seating position.

B. Test Block Width

Standard No. 210 currently specifies that a body block 20 inches long by 14 inches wide shall be used in compliance testing for lap belt anchorages and the pelvic portion of lap/shoulder belt anchorages. The NPRM noted that the 14 inch width of the current body block can preclude the simultaneous testing of safety belt anchorages for all three seating positions in the rear seat of smaller cars. To address this problem, the NPRM proposed to reduce the body block's dimensions to 13 inches long by 10 inches wide. The proposed width reduction was intended to make it easier to simultaneously test anchorages for rear seating positions in smaller cars. The proposed length reduction was intended to provide more total pull distance in both front and rear seats, thereby making it easier to conduct the strength tests. NHTSA acknowledged that the proposed reduction in the size of the body blocks would result in a very small reduction in the longitudinal load applied to the anchorage. However, the agency noted that the overall load input would be unchanged.

Nearly all of the commenters that addressed this proposed reduction in the size of the body block opposed the change. Only BMW commented that it had no objection to this proposal, although that commenter suggested that the use of the smaller body blocks be made optional with the manufacturer. The other commenters raised various objections to the proposal.

First, many commenters argued that the smaller body blocks would move Standard No. 210 away from harmonization with the ECE regulation, which uses 20 inch by 16 inch body blocks for its lap belt anchorage testing. This argument was not persuasive. Standard No. 210 currently specifies that 14 inch wide body blocks will be used in compliance testing. This requirement is not harmonized with the ECE regulation's specification of 16 inch wide body blocks. It does not appear feasible to move Standard No. 210 toward the wider body blocks used by the ECE, considering the testing problems that have been encountered with the current body blocks that are already narrower than the ECE body blocks. The proposed reduction in size to even narrower 10 inch wide body blocks would remain not harmonized with the ECE 16 inch wide body blocks, but would reduce the testing problems encountered with the current 14 inch wide body blocks. Thus, the current and proposed absence of harmonization between Standard No. 210 and the ECE regulation is not unnecessary nor is it an oversight. Instead, it reflects actual problems that have arisen in compliance testing.

Second, many commenters argued that the smaller body block would produce unrealistic loading on the anchorages. The reduction in width of the body block will cause the load to be applied in a direction that is five to ten degrees further away from directly forward of the anchorage. NHTSA agrees that, as the angle of the force application deviates from the directly forward direction, an actual increase in the resultant vector in the direction of the force applied will be created. This means that the anchorages being tested will experience slightly higher forces as less wide body blocks are used to apply the forces, even though the overall force remains constant.

However, NHTSA does not believe these slightly higher forces are significant enough to produce differing test results. The 10 inch wide body blocks would produce forces on the lap belt anchorages during compliance testing that are approximately two percent greater than would be imposed on those anchorages by using 14 inch wide body blocks during compliance testing. Although commenters asserted that this increase could force redesign of the anchorages in some vehicles, no commenter offered any examples of particular vehicles whose anchorages would have to be redesigned.

Additionally, NHTSA does not believe that the reduced body block size is unrepresentative of potential vehicle occupants, since many children have a pelvic width of 10 inches or less. For instance, the hip breadth of a sitting 50th percentile 6-year-old child is 8.4 inches. The hip breadth of a sitting 5th percentile adult female is 12.8 inches. Given these facts, the argument that the 10 inch wide body block would be unrepresentative of persons likely to occupy the seating position is not convincing.

Third, several commenters questioned the need for smaller body blocks for various reasons. Some commenters, including Mitsubishi, asserted that they had not encountered any difficulties in conducting certification testing in the rear seats of even their subcompacts using the procedures currently specified in Standard No. 210. Such assertions are contrary to the agency's experience, because NHTSA has encountered difficulties conducting compliance testing in the rear seat of smaller cars, as stated in the NPRM. The agency believes it must make some changes to the compliance testing procedures set forth in the standard to minimize difficulties in such testing, regardless of the manufacturers' experiences during their certification testing of their particular models.

Other commenters, including Ford, asserted that the compliance testing problems that led the agency to propose the use of smaller body blocks would be alleviated by other changes proposed in the NPRM. It was asserted that, when these other changes were adopted, there would be no further need for the smaller body blocks in compliance testing. In response to these allegations, the agency has analyzed this rule and concluded that there may still be instances where the smaller body blocks will be needed, but those instances will be less frequent. Accordingly, this rule adopts a provision

permitting the use of the smaller body blocks.

Even though NHTSA has concluded that the arguments set forth in the comments are not persuasive reasons for *prohibiting* the use of smaller body blocks in compliance testing, the agency is reluctant to *require* the use of smaller body blocks in the face of these arguments. The reason for proposing to use smaller body blocks was solely to reduce compliance testing problems. The smaller body blocks were not intended to address any specific safety concerns or otherwise impose more stringent testing requirements. To the extent that the smaller body blocks impose more stringent requirements, even if the increase in stringency is insignificant, this is unintended.

This final rule includes two additional provisions to ensure that no unintended impacts will result from the use of smaller body blocks. First, the smaller body block will be used only in the center seating position(s) of three or more simultaneously tested sets of anchorages. This will ensure that the smaller body block is used only when it might be necessary to do so. Second, the use of the smaller body block at the center seating positions will be at the option of the vehicle manufacturer. This will ensure that the smaller body block is used for testing only when the vehicle manufacturer chooses to specify the use of the smaller body block. These two new provisions allow the agency to ensure that no additional burdens will be imposed on any party as a result of the use of smaller body blocks.

VI. Clarification of Compliance Failure

In the agency's compliance testing for Standard No. 210, there have been instances in which the safety belt attachment hardware or attachment bolts have broken before the maximum test load had been applied to the anchorage. However, the agency's ability to take effective corrective action was hindered by the fact that it is not clear under the existing language of Standard No. 210 that such failures are noncompliances with the standard, since the standard sets performance requirements for anchorages.

The agency tentatively concluded that it was necessary to amend Standard No. 210 to assure the proper performance not only of the anchorage fixture, but also of the belt assembly attachment hardware and bolts. The strength requirements of Standard No. 210 were intended to ensure that the safety belt system will remain attached to the vehicle and not break free, even when exposed to severe crash forces. Obviously the safety belt system will *not* remain attached to the vehicle if the anchorage fixture successfully withstands the crash forces, but the hardware attaching the belt system to the anchorage fixture fails when exposed to these crash forces.

Accordingly, the NPRM proposed to amend Standard No. 210 to explicitly provide that the attachment hardware, the attachment bolt, and the anchorage fixture itself must all comply with the performance requirements for anchorage strength.

Most of the commenters that addressed this proposal opposed it. The most frequently stated reason for opposing this change was that Standard No. 209, *Seat Belt Assemblies*, already establishes performance requirements for the strength of anchorage hardware.

One of the commenters asked if NHTSA was using the term "attachment hardware" in this proposal to mean the same thing that this term means when used in Standard No. 209. Section S3 of Standard No. 209 defines attachment hardware as "any or all hardware designed for securing the webbing of a seat belt assembly to a motor vehicle." The answer to this question is yes, "attachment hardware" is used with the same meaning in Standards No. 209 and 210.

This commenter and others suggested that it was unnecessary to impose a second strength requirement on the attachment hardware. NHTSA did not find these comments persuasive. As explained earlier in this preamble, the test conditions in Standard No. 210 are not intended to simulate an actual vehicle crash. Instead, the test conditions in Standard No. 210 are intended to subject the safety equipment to force or exposure levels that are sufficiently high that one can reasonably conclude that the equipment is unlikely to fail as a result of exposure to severe crash forces or severe environmental conditions. NHTSA believes it is important to expose both the anchorage itself and the connection(s) between that anchorage and the safety belt assembly, including the connection between the attachment hardware and the anchorage, to these high force levels. Such exposure indicates that the safety belt system will remain attached to the anchorage when exposed to crash forces. Although requiring the attachment hardware to be tested under Standard No. 210 may appear redundant of the existing requirement that the attachment hardware comply with the requirements of Standard No. 209, these tests actually demonstrate a continuum of strength necessary for occupant protection. Accordingly, S5 of Standard No. 210 is amended to explicitly provide that the attachment hardware and the attachment bolt must comply with the performance requirements for anchorage strength in Standard No. 210.

VII. Issues Not Directly Discussed in the NPRM

A. Vehicles with a GVWR in Excess of 10,000 Pounds

Several commenters asked that the agency consider harmonizing the anchorage strength requirements more fully with the ECE regulations as applied to heavy vehicles (those with a gross vehicle weight rating [GVWR] of more than 10,000 pounds). The commenters noted that ECE Regulation No. 14 permits the anchorages on heavy vehicles to be subjected to forces during strength testing that are one-half of the forces to which the anchorages on passenger cars are subjected. The justification for this reduction in force for heavy vehicle anchorages is that, in a crash situation, the greater mass of these heavy vehicles will result in deceleration at a much slower rate than that of smaller vehicles, which in turn will subject the vehicle occupant and the vehicle safety belt assemblies and anchorages to lesser crash forces.

NHTSA agrees that the loads experienced by the anchorages in heavy vehicles during crashes are generally less than the loads experienced by lighter vehicles during similar crashes. However, the questions of whether to establish different loading requirements during the strength test for anchorages in heavy vehicles, and, if so, what different requirements are appropriate, were not within the scope of this rulemaking. The agency is currently examining the question of the appropriate compliance test levels for heavy vehicles, including the safety belt anchorages in those vehicles. NHTSA will address this topic in a later rulemaking action devoted to this topic.

Further, several commenters raised questions about seat adjusters on pedestal seats in heavy vehicles (i.e., seats that include a suspension system and that are mounted on a pedestal-like structure). Flxible correctly stated in its comments that Standard No. 210's anchorage strength test requires that the seat be in its rearmost position. According to this commenter, many suspension systems on heavy vehicle seats allow seat movement in both the vertical and horizontal directions. For most designs of seats with suspension systems, a tether strap is used to connect the movable part of the seat to the vehicle structure. This tether strap is designed to be slack at all times to allow

the movable part of the seat to move freely in both the vertical and horizontal directions. In order to put the seat in its rearmost position to test the anchorage strength, the tether must be adjusted to be taut so that the seat does not move horizontally to some position forward of its rearmost position. Flxible commented that while this allows the agency to test suspension seats in the same way as it tests seats without a suspension system, it also results in testing suspension seats and safety belt anchorages in a way that is totally artificial and not representative of how that seat and anchorage would react in a real vehicle crash situation.

Again, this concern is outside the scope of this rulemaking action. However, Standard No. 210 compliance testing is conducted simultaneously with the compliance testing for Standard No. 207, *Seating Systems*. In an August 3, 1988 letter to Mr. Barry Nudd, the agency explained in detail the procedures it uses for Standard No. 207 compliance testing of pedestal seats with seat adjusters that are installed in heavy vehicles. The agency promised in the Nudd letter to initiate rulemaking on Standard No. 207's requirements for pedestal-type seats. As a part of that rulemaking, NHTSA will also address the appropriateness of the existing requirements in Standard No. 210 for pedestal-type seats.

B. Leadtime

The agency proposed to make these changes effective very soon after publication of a final rule, because the agency believed that the changes would just simplify the compliance test procedures and promote the international harmonization of vehicle safety requirements. NHTSA did not believe that any design changes would have to be made to existing vehicles in response to this rule. Accordingly, the agency believed that the only leadtime that would be needed would be the time to institute changes in the compliance test procedures.

However, many commenters argued that these agency beliefs were incorrect. Several commenters stated that some vehicle models would have to be redesigned in response to this rule, and that the redesign would require more time than was proposed in the NPRM. The leadtime said to be necessary to accommodate the redesigns ranged from 18 months, in the comments of Mazda and Subaru, to 4 years, in the comments of Nissan and Toyota. The agency was persuaded by these comments that more leadtime is necessary, especially since some modifications of existing designs may be needed as a result of the amendment to the minimum lap belt mounting angle incorporated in this rule. Therefore, this rule will not become effective until September 1, 1992. The agency has concluded that this period of leadtime will allow manufacturers to make the necessary changes without imposing an unnecessary burden.

Economic and Other Impacts of This Rule

NHTSA has evaluated the impacts of this final rule and determined that it is neither "major" within the meaning of Executive Order 12291 nor "significant" within the meaning of the Department of Transportation's regulatory policies and procedures. The new requirement for a minimum lap belt angle of 30 degrees will require modifications to some current vehicles that have lap belt angles of less than 30 degrees. However, the agency believes any such modifications that are necessary for current vehicles do not require any extensive redesign of the vehicle. These modifications can be made with minimal costs and burdens as a part of the minor changes that are routinely made to vehicles between model years. Since this rule allows such modifications to be made at any time before September 1, 1992, the costs and burdens of making the modifications will be minimal. NHTSA estimates that the costs of these modifications will average between $1.40 and $3.80 per affected vehicle.

The requirement for simultaneous testing of the anchorages for all seating positions that face in the same direction and are common to the same occupant seat could force design changes to such anchorages mounted on the seat frame, because such anchorages were not subject to the simultaneous testing requirement before the effective date of this amendment. However, testing done both by this agency and by manufacturers has shown that it is feasible to design seats for passenger cars and vans, *including* small school buses, that can withstand simultaneous testing of anchorages under Standard No. 210, testing of the seat under Standard No. 207, and testing of the seat back under Standard No. 222. While there will be some costs and burdens for the manufacturers whose vehicles are not already equipped with anchorages and seats that can comply with the simultaneous testing requirement, those costs and burdens will not be significant. Instead, those manufacturers will incur the costs that have already been voluntarily incurred by many of their competitors.

Simultaneous testing of seat mounted anchorages in small school bus seats might increase prices of those buses by between $36 and $320 per bus, for total costs of from $183,600 to $1,632,000. Because the elasticity of demand for school buses is very low, these increased prices are not anticipated to have any significant effect on school bus sales. Likewise, no significant impacts are anticipated for school bus manufacturers.

The deletion of the requirement for redundant anchorages in vehicles equipped with automatic safety belts will result in some minimal cost savings for the manufacturers of vehicles equipped with automatic safety belts. However, this savings will be minimal, since it will only reflect the materials cost of the redundant anchorages, estimated by NHTSA to be not more than $1.00 per vehicle. Since as many as 4 million passenger cars per year could avoid these costs, a total cost savings of $4 million might result from this deletion of the redundant anchorage requirements.

Considering all these factors together, NHTSA estimates that if the estimated costs and other burdens are at the high end of the range, this rule will impose a net cost increase of $411,000. If the actual costs associated with this rulemaking are at the lower end of the estimated range, a net cost savings of up to $3.3 million could be realized.

Additionally, the agency has analyzed the effects of this rule on small entities, in accordance with the Regulatory Flexibility Act. Based on this analysis, I hereby certify that this rule will not have a significant economic impact on a substantial number of small entities. To the extent that any vehicle manufacturers qualify as small entities, their number would not be substantial. In any event, the economic impacts associated with this rule will not be significant, as explained above. Because of the minimal economic impacts of this rule, these new requirements will not significantly affect the purchase price of new motor vehicles purchased by small organizations and small governmental units.

NHTSA has analyzed this rule under the National Environmental Policy Act and determined that it will not have a significant effect on the human environment. The amendments made by this rule do not require any changes in materials or assembly techniques.

This rule has also been analyzed in accordance with the principles and criteria contained in Executive Order 12612, and NHTSA has determined that this rule does not have sufficient federalism implications to warrant the preparation of a Federalism Assessment.

List of Subjects in 49 CFR Part 571

Incorporation by reference, Imports, Motor vehicle safety, Motor vehicles.

In consideration of the foregoing, 49 CFR 571.210 is amended as follows:

PART 571—[AMENDED]

1. The authority citation for part 571 continues to read as follows:

Authority: 15 U.S.C. 1392, 1401, 1403, 1407; delegation of authority at 49 CFR 1.50.

§ 571.210 [Amended]

2. S4.1.3 of Standard No. 210 is revised to read as follows:

S4.1 *Type.*

* * * * *

S4.1.3 (a) Notwithstanding the requirement of S4.1.1, each vehicle manufactured on or after September 1, 1987 that is equipped with an automatic restraint at the front right outboard designated seating position, which automatic restraint cannot be used for securing a child restraint system or cannot be adjusted by the vehicle owner to secure a child restraint system solely through the use of attachment hardware installed as an item of original equipment by the vehicle manufacturer, shall have, at the manufacturer's option, either anchorages for a Type 1 seat belt assembly installed at that position or a Type 1 or Type 2 seat belt assembly installed at that position. If a manufacturer elects to install anchorages for a Type 1 seat belt assembly to comply with this requirement, those anchorages shall consist of, at a minimum, holes threaded to accept bolts that comply with S4.1(f) of Standard No. 209 (49 CFR 571.209).

(b) The requirement in S4.1.1 of this standard that seat belt anchorages for a Type 2 seat belt assembly shall be installed for each forward-facing outboard designated seating position in passenger cars does not apply to any such seating positions that are equipped with an automatic or dynamically tested manual seat belt assembly that meets the frontal crash protection requirements of S5.1 of Standard No. 208 (49 CFR 571.208).

§ 571.210 [Amended]

3. S4.2 of Standard No. 210 is amended by revising S4.2.1, S4.2.2, and S4.2.4 to read as follows:

S4.2 *Strength.*

S4.2.1 Except for side-facing seats, the anchorages, attachment hardware, and attachment bolts for any of the following seat belt assemblies shall withstand a 5,000-pound force when tested in accordance with S5.1 of this standard:

(a) Type 1 seat belt assembly:

(b) Lap belt portion of either a Type 2 or automatic seat belt assembly, if such seat belt assembly is voluntarily installed at a seating position; and

(c) Lap belt portion of either a Type 2 or automatic seat belt assembly, if such seat belt assembly is equipped with a detachable upper torso belt.

S4.2.2 The anchorages, attachment hardware, and attachment bolts for all Type 2 and automatic seat belt assemblies that are installed to comply with Standard No. 208 (49 CFR 571.208) shall withstand 3,000-pound forces when tested in accordance with S5.2.

* * * * *

S4.2.4 The anchorages for all designated seating positions that face in the same direction and are common to the same occupant seat shall be tested by simultaneously loading those anchorages in accordance with the applicable procedures set forth in S5 of this standard.

§ 571.210 [Amended]

4. S4.3 of Standard No. 210 is amended by revising S4.3.1.1, S4.3.1.2, S4.3.1.3, and S4.3.2, to read as follows:

S4.3 *Location.* * * *

S4.3.1 *Seat belt anchorages for Type 1 seat belt assemblies and the pelvic portion of Type 2 seat belt assemblies.*

S4.3.1.1 In an installation in which the seat belt does not bear upon the seat frame:

(a) If the seat is a nonadjustable seat, then a line from the seating reference point to the nearest contact point of the belt with the hardware attaching it to the anchorage shall extend forward from the anchorage at an angle with the horizontal of not less than 30 degrees and not more than 75 degrees.

(b) If the seat is an adjustable seat, then a line from a point 2.50 inches forward of and 0.375 inches above the seating reference point to the nearest contact point of the belt with the hardware attaching it to the anchorage shall extend forward from the anchorage at an angle with the horizontal of not less than 30 degrees and not more than 75 degrees.

S4.3.1.2 In an installation in which the belt bears upon the seat frame, the seat belt anchorage, if not on the seat structure, shall be aft of the rearmost belt contact point on the seat frame with the seat in the rearmost position. The line from the seating reference point to the nearest belt contact point on the seat frame, with the seat positioned at the seating reference point, shall extend forward from that contact point at an angle with the horizontal of not less than 30 degrees and not more than 75 degrees.

S4.3.1.3 In an installation in which the seat belt anchorage is on the seat structure, the line from the seating reference point to the nearest contact point of the belt with the hardware attaching it to the anchorage shall extend forward from that contact point at an angle with the horizontal of not less than 30 degrees and not more than 75 degrees.

* * * * *

S4.3.2 *Seat belt anchorages for the upper torso portion of Type 2 seat belt assemblies.* Adjust the seat to its full rearward and downward position and adjust the seat back to its most upright position. With the seat and seat back so positioned, the seat belt anchorage for the upper end of the upper torso restraint shall be located within the acceptable range shown in Figure 1, with reference to a two-dimensional drafting template described in SAE Recommended Practice J826 (May 1987). The template's "H" point shall be at the design "H" point of the seat for its full rearward and full downward position, as defined in SAE Recommended Practice J1100 (June 1984), and the template's torso line shall be at the same angle from the vertical as the seat back.

§ 571.210 [Amended]

5. S5 of Standard No. 210 is revised to read as follows:

S5 *Test procedures.* Each vehicle shall meet the requirements of S4.2 of this standard when tested according to the following procedures. Where a range of values is specified, the vehicle shall be able to meet the requirements at all points within the range. For the testing specified in these procedures, the attachment hardware (including the retractors and "D" rings) and the attachment bolts from the seat belt assembly installed at a seating position shall be used to attach to the anchorage being tested material whose breaking strength is equal to or greater than the breaking strength of the webbing for the seat belt assembly installed as original equipment at that seating position. The geometry of the attachment shall duplicate the geometry of the attachment of the originally installed seat belt assembly.

S5.1 *Seats with Type 1 or Type 2 seat belt anchorages.* With the seat in its rearmost position, apply a force of 5,000 pounds in the direction in which the seat faces to a pelvic body block as described in Figure 2A, restrained by a material whose breaking strength is equal to or greater than the breaking strength of the webbing for the seat belt assembly installed as original

equipment at that seating position, which material is installed so as to duplicate the geometry of any of the seat belt assemblies identified in S4.2.1 of this standard that are installed as original equipment at any designated seating positions on the seat, in a plane parallel to the longitudinal centerline of the vehicle, with an initial force application angle of not less than 5 degrees nor more than 15 degrees above the horizontal. Apply the force at the onset rate of not more than 50,000 pounds per second. Attain the 5,000 pound force in not more than 30 seconds and maintain it for 10 seconds. At the manufacturer's option, the pelvic body block described in Figure 2B may be substituted for the pelvic body block described in Figure 2A to apply the specified force to the center set(s) of anchorages for any group of three or more sets of anchorages that are simultaneously loaded in accordance with S4.2.4 of this standard.

S5.2 *Seats with Type 2 or automatic seat belt anchorages.* With the seat in its rearmost position, apply a force of 3,000 pounds in the direction in which the seat faces simultaneously to a pelvic body block, as described in Figure 2A, restrained by a material whose breaking strength is equal to or greater than the breaking strength of the webbing for the seat belt assembly installed as original equipment at that seating position, which material is installed so as to duplicate the geometry of any of the seat belt assemblies identified in S4.2.2 of this standard that are installed as original equipment at any designated seating positions on the seat, in a plane parallel to the longitudinal centerline of the vehicle, with an initial force application angle of not less than 5 degrees nor more than 15 degrees above the horizontal. Apply the forces at the onset rate of not more than 30,000 pounds per second. Attain the 3,000 pound force in not more than 30 seconds and maintain it for 10 seconds. At the manufacturer's option, the pelvic body block described in Figure 2B may be substituted for the pelvic body block described in Figure 2A to apply the specified force to the center set(s) of anchorages for any group of three or more sets of anchorages that are simultaneously loaded in accordance with S4.2.4 of this standard at the onset rate of not more than 30,000 pounds per second. Attain the 3,000 pound force in not more than 30 seconds and maintain them for 10 seconds.

§ 571.210 [Amended]

6. The figures in Standard No. 210 are amended by revising Figure 1, redesignating Figure 2 as Figure 2A and republishing it, and adding a new Figure 2B, to appear as follows:

Issued on April 18, 1990.

Jeffrey R. Miller,

Deputy Administrator.

BILLING CODE 4910-59-M

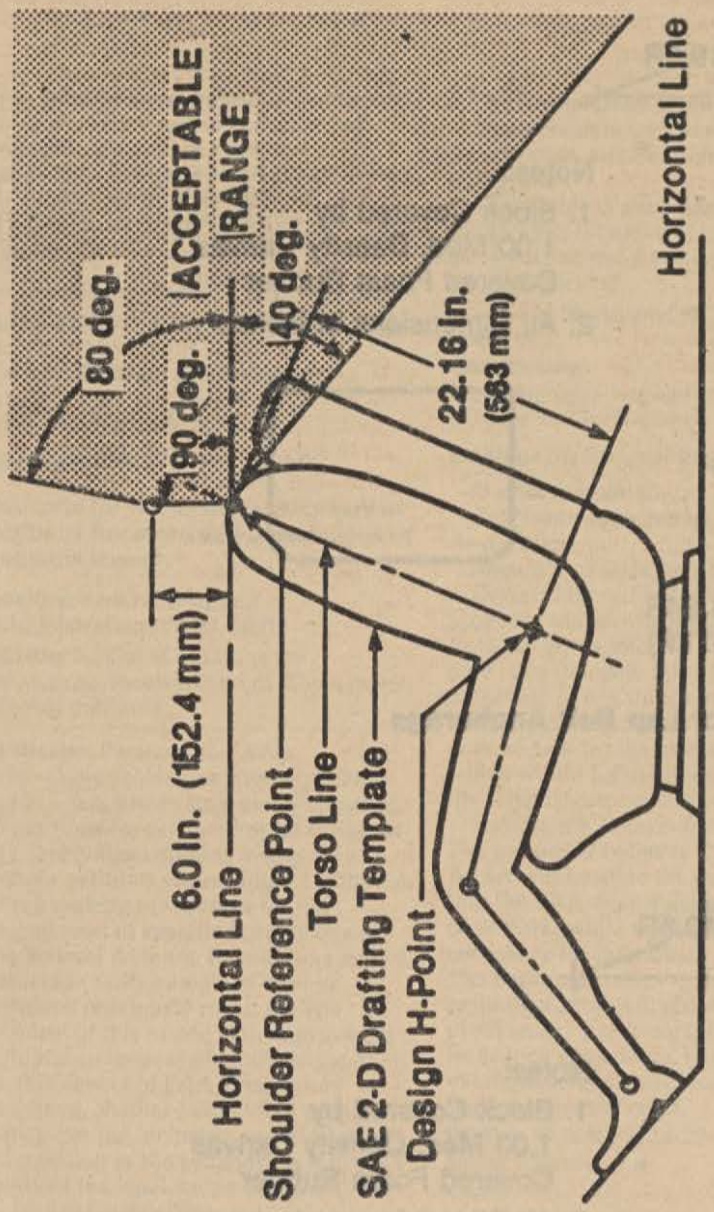

FIGURE 1 - LOCATION OF ANCHORAGE FOR UPPER TORSO RESTRAINT

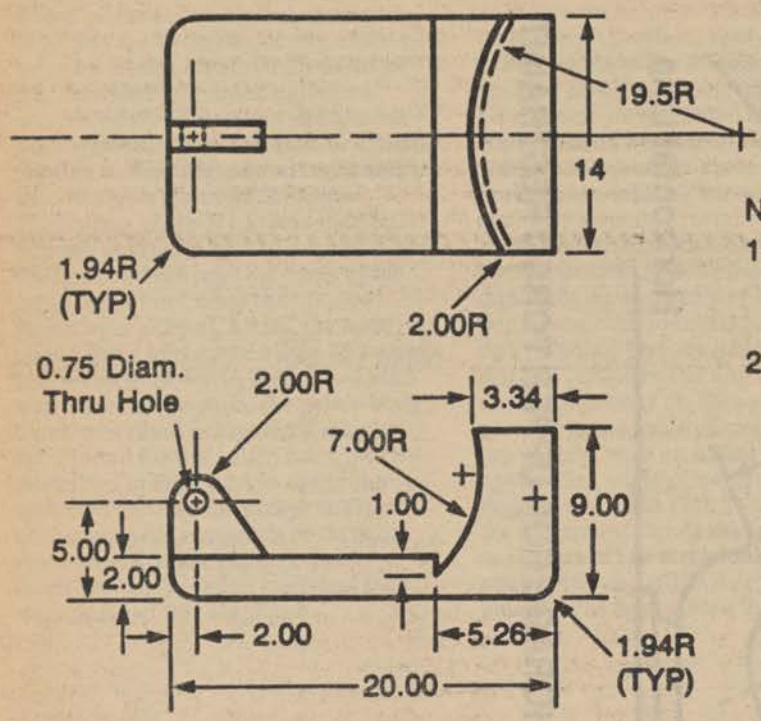

Notes:
1. Block Covered by 1.00 Med. Density Canvas Covered Foam Rubber
2. All Dimensions in Inches

Figure 2A Body Block for Lap Belt Anchorage

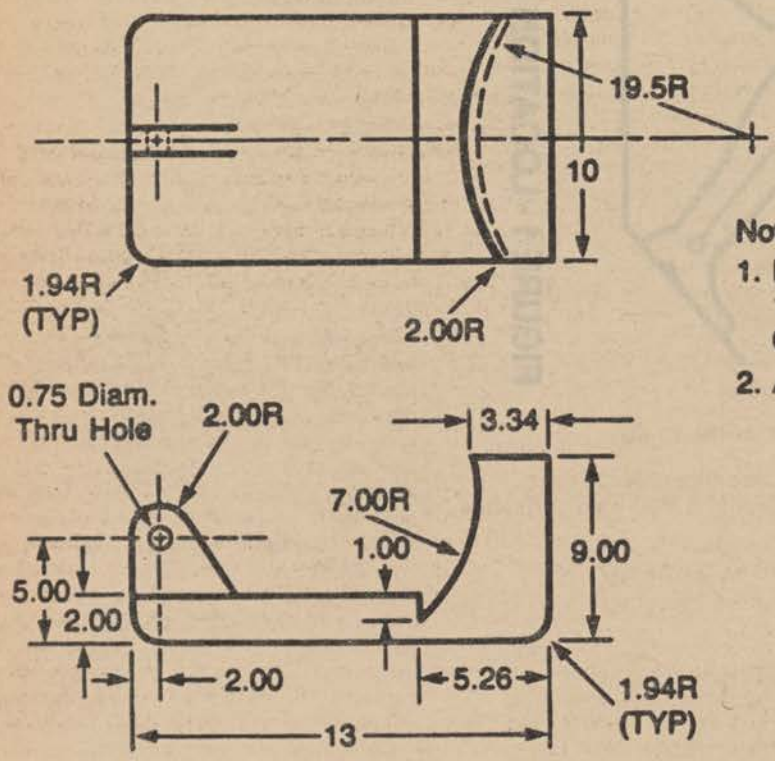

Notes:
1. Block Covered by 1.00 Med. Density Canvas Covered Foam Rubber
2. All Dimensions in Inches

Figure 2B Optional Body Block for Center Seating Positions

[FR Doc. 90-9706 Filed 4-27-90; 8:45 am]
BILLING CODE 4910-59-C

Proposed Rules

Federal Register
Vol. 55, No. 83
Monday, April 30, 1990

This section of the FEDERAL REGISTER contains notices to the public of the proposed issuance of rules and regulations. The purpose of these notices is to give interested persons an opportunity to participate in the rule making prior to the adoption of the final rules.

DEPARTMENT OF TRANSPORTATION

Federal Aviation Administration

14 CFR Chapter I

[Summary Notice No. PR-90-10]

Petitions for Rulemaking; Summary of Petitions Received and Dispositions of Petitions Issued

AGENCY: Federal Aviation Administration (FAA), DOT.

ACTION: Notice of petitions for rulemaking received and of dispositions of prior petitions.

SUMMARY: Pursuant to FAA's rulemaking provisions governing the application, processing, and disposition of petitions for rulemaking (14 CFR part 11), this notice contains a summary of certain petitions requesting the initiation of rulemaking procedures for the amendment of specified provisions of the Federal Aviation Regulations and of denials or withdrawals of certain petitions previously received. The purpose of this notice is to improve the public's awareness of, and participation in, this aspect of FAA s regulatory activities. Neither publication of this notice nor the inclusion or omission of information in the summary is intended to affect the legal status of any petition or its final disposition.

DATES: Comments on petitions received must identify the petition docket number involved and must be received on or before June 29, 1990.

ADDRESSES: Send comments on any petition in triplicate to: Federal Aviation Administration, Office of the Chief Counsel, Attn: Rules Docket (AGC-10), Petition Docket No. _____, 800 Independence Avenue SW., Washington, DC 20591.

FOR FURTHER INFORMATION CONTACT: The petition, any comments received, and a copy of any final disposition are filed in the assigned regulatory docket and are available for examination in the Rules Docket (AGC-10), room 915G, FAA Headquarters Building (FOB 1OA), 800 Independence Avenue SW., Washington, DC 20591; telephone (202) 267-3132.

This notice is published pursuant to paragraphs (b) and (f) of § 11.27 of part 11 of the Federal Aviation Regulations (14 CFR part 11).

Issued in Washington, DC, on April 23, 1990.

Clara Thieling,

Acting Manager, Program Management Staff, Office of the Chief Counsel.

Petitions for Rulemaking

Docket No.: 26145.

Petitioner: Long Island Pilots Association.

Regulations Affected: 14 CFR 71.501.

Description of Petition: The petitioner proposes to reconfigure the Islip. New York ARSA as follows: (1) The inner core is unchanged; (2) establish the outer ring at a distance of 2 nautical miles from the boundary of the inner core, except for the southern limit, which would follow the shoreline; (3) the Bayport airport cut-out is retained.

Petitioner's Reason for the Request: The petitioner believes the reconfigured ARSA will provide the positive control that the FAA deems necessary for Islip, New York, while retaining the airspace necessary for instrument approaches The petitioner believes the reconfiguration will reduce or eliminate problems of traffic compression, frequency congestion, controller overload, cockpit workload, and higher flight instruction costs.

[FR Doc. 90-9925 Filed 4-27-90; 8:45 am]
BILLING CODE 4910-13-M

14 CFR Part 39

[Docket No. 90-NM-62-AD]

Airworthiness Directives; Airbus Industrie Model A300 Series Airplanes

AGENCY: Federal Aviation Administration (FAA), DOT.

ACTION: Notice of proposed rulemaking (NPRM).

SUMMARY: This notice proposes to supersede an existing airworthiness directive (AD), applicable to certain Airbus Industrie Model A300 series airplanes, which currently requires a one-time inspection of certain main landing gear (MLG) uplock control bellcrank support bearings, and replacement, if necessary. This action would require a one-time inspection to identify bearing part number, and replacement with new sealed bearings, if necessary. This proposal is prompted by reports that bearings with Part Number 8116-16 are subject to corrosion. This condition, if not corrected, could result in the inability of the MLG to extend in the free-fall mode following a failure of the normal extend mode.

DATES: Comments must be received no later than June 19, 1990.

ADDRESSES: Send comments on the proposal in duplicate to Federal Aviation Administration, Northwest Mountain Region, Transport Airplane Directorate, ANM-103, Attention: Airworthiness Rules Docket No. 90-NM-62-AD, 17900 Pacific Highway South, C-68966, Seattle, Washington 98168. The applicable service information may be obtained from Airbus Industrie Support Division, Avenue Didier Daurat, 31700 Blagnac, France. This information may be examined at the FAA, Northwest Mountain Region, Transport Airplane Directorate, 17900 Pacific Highway South, Seattle, Washington, or the Standardization Branch, 9010 East Marginal Way South, Seattle, Washington.

FOR FURTHER INFORMATION CONTACT: Mr. Greg Holt, Standardization Branch, ANM-113; telephone (206) 431-1918. Mailing address: FAA, Northwest Mountain Region, 17900 Pacific Highway South, C-68996, Seattle, Washington 98168.

SUPPLEMENTARY INFORMATION: Interested persons are invited to participate in the making of the proposed rule by submitting such written data, views, or arguments as they may desire. Communications should identify the regulatory docket number and be submitted in duplicate to the address specified above. All communications received on or before the closing date for comments specified above will be considered by the Administrator before taking action on the proposed rule. The proposals contained in this Notice may be changed in light of the comments received.

Comments are specifically invited on the overall regulatory, economic, environmental, and energy aspects of the proposed rule. All comments

submitted will be available, both before and after the closing date for comments, in the Rules Docket for examination by interested persons. A report summarizing each FAA/public contact, concerned with the substance of this proposal, will be filed in the Rules Docket.

Commenters wishing the FAA to acknowledge receipt of their comments submitted in response to this Notice must submit a self-addressed, stamped post card on which the following statement is made: "Comments to Docket Number 90-NM-62-AD." The post card will be date/time stamped and returned to the commenter.

Discussion

On October 11, 1989, the FAA issued AD 89-23-01, Amendment 39-6366 (54 FR 43045; October 20, 1989), to require a one-time inspection of certain main landing gear (MLG) uplock control bellcrank support bearings, and replacement if necessary. That action was prompted by a report that both MLG's did not extend in a free-fall mode due to a jam caused by defective bearings. This condition, if not corrected, could result in the inability of the MLG to extend in the free-fall mode following a failure of the normal extend mode.

Since issuance of that AD, a recent report has indicated that MLG uplock control bellcrank support bearings identified as Part Number (P/N) 8116-16 are subject to corrosion. These bearings must be replaced with new sealed bearings identified as P/N 8106-16. This condition, if not corrected, could result in the inability of the MLG to extend in the free-fall mode following a failure of the normal extend mode.

Airbus Industrie has issued Service Bulletin A300-32-395, dated November 30, 1989, which describes procedures to replace the existing bearings of the MLG door uplock boxes with new sealed bearings. The Direction Generale de L'Aviation Civile (DGAC) has classified this service bulletin as mandatory, and has issued Airworthiness Directive 89-040-091(B)RI addressing this subject.

This airplane model is manufactured in France and type certificated in the United States under the provisions of section 21.29 of the Federal Aviation Regulations and the applicable bilateral airworthiness agreement.

Since this condition is likely to exist or develop on other airplanes of the same type design registered in the United States, an AD is proposed which would supersede AD 89-23-01 with a new airworthiness directive that would require a one-time inspection to confirm whether bearings are defective, and replacement of the MLG uplock control bellcrank support bearings, P/N 8116-16, with new sealed bearings, P/N 8106-16, in accordance with the service bulletin previously described.

It is estimated that 66 airplanes of U.S. registry would be affected by this AD, that it would take approximately 11.5 manhours per airplane to accomplish the required actions, and that the average labor cost would be $40 per manhour. The estimated cost for required parts is $1,330. Based on these figures, the total cost impact of the AD on U.S. operators is estimated to be $118,140.

The regulations proposed herein would not have substantial direct effects on the States, on the relationship between the national government and the States, or on the distribution of power and responsibilities among the various levels of government. Therefore, in accordance with Executive Order 12612, it is determined that this proposal would not have sufficient federalism implications to warrant the preparation of a Federalism Assessment.

For the reasons discussed above, I certify that this proposed regulation (1) is not a "major rule" under Executive Order 12291; (2) is not a "significant rule" under DOT Regulatory Policies and Procedures (44 FR 11034; February 26, 1979); and (3) if promulgated, will not have a significant economic impact, positive or negative, on a substantial number of small entities under the criteria of the Regulatory Flexibility Act. A copy of the draft evaluation prepared for this action is contained in the regulatory docket. A copy of it may be obtained from the Rules Docket.

List of Subjects in 14 CFR Part 39

Air transportation, Aircraft, Aviation safety, Safety.

The Proposed Amendment

Accordingly, pursuant to the authority delegated to me by the Administrator, the Federal Aviation Administration proposes to amend 14 CFR part 39 of the Federal Aviation Regulations as follows:

PART 39—[AMENDED]

The authority citation for part 39 continues to read as follows:

Authority: 49 U.S.C. 1354(a), 1421 and 1423; 49 U.S.C. 106(g) (Revised Pub. L. 97-449, January 12, 1983); and 14 CFR 11.89.

§ 39.13 [Amended]

2. Section 39.13 is amended by superseding Amendment 39-6366 (54 FR 43045; October 20, 1989), AD 89-23-01, with the following new airworthiness directive:

Airbus Industrie: Applies to Model A300 series airplanes, serial numbers up to and including 253, certificated in any category. Compliance is required as indicated, unless previously accomplished.

To prevent malfunction of the main landing gear in the free fall mode, accomplish the following:

A. Within 100 landings after November 27, 1989 (the effective date of AD 89-23-01), inspect both main landing gears (MLG) for defective uplock control bellcrank support bearings, Part Number (P/N) 8116-16, in accordance with All Operators Telex (AOT) 32/88/02, dated December 14, 1988. If a defective bearing is found, replace it with a serviceable bearing prior to further flight.

B. Replace both MLG uplock control bellcrank support bearings, P/N 8116-16, with new sealed bearings, P/N 8106-16, in accordance with Airbus Industrie Service Bulletin A300-32-395, dated November 30, 1989, as follows:

1. Within 30 months after the effective date of this AD, if bearings, P/N 8116-16, were replaced at the time of accomplishing paragraph A., above.

2. Within 15 months after the effective date of this AD, if bearings, P/N 8116-16 were not replaced at the time of accomplishing paragraph A., above.

C. An alternate means of compliance or adjustment of the compliance time, which provides an acceptable level of safety, may be used when approved by the Manager, Standardization Branch, ANM-113, FAA, Northwest Mountain Region.

Note: The request should be forwarded through an FAA Principal Maintenance Inspector (PMI), who will either concur or comment and then send it to the Manager, Standardization Branch, ANM-113.

D. Special flight permits may be issued in accordance with FAR 21.197 and 21.199 to operate airplanes to a base in order to comply with the requirements of this AD.

All persons affected by this directive who have not already received the appropriate service documents from the manufacturer may obtain copies upon request to Airbus Industrie, Airbus Support Division, Avenue Didier Daurat, 31700 Blagnac, France. These documents may be examined at the FAA, Northwest Mountain Region, Transport Airplane Directorate, 17900 Pacific Highway South, Seattle, Washington, or the Standardization Branch, 9010 East Marginal Way South, Seattle, Washington.

Issued in Seattle, Washington, on April 19, 1990.

Darrell M. Pederson,

Acting Manager, Transport Airplane Directorate, Aircraft Certification Service.

[FR Doc. 90-9920 Filed 04-27-90; 8:45 am]

BILLING CODE 4910-13-M

14 CFR Part 39

[Docket No. 90-NM-52-AD]

Airworthiness Directives; Airbus Industrie Model A300, A310, and A300-600 Series Airplanes

AGENCY: Federal Aviation Administration (FAA), DOT.

ACTION: Notice of proposed rulemaking (NPRM).

SUMMARY: This notice proposes to adopt a new airworthiness directive (AD), applicable to certain Airbus Industrie Model A300, A310, and A300-600 series airplanes, which would require repetitive inspections to detect corrosion in the passenger/crew door dampers and emergency operation cylinders, and repair, if necessary; and provides terminating action for the repetitive inspections. This proposal is prompted by reports of corrosion on the percussion system and on the center piston components discovered during emergency opening of the passenger/crew door. This condition, if not corrected, could result in failure of the door to open during an emergency situation.

DATES: Comments must be received no later than June 19, 1990.

ADDRESSES: Send comments on the proposal in duplicate to the Federal Aviation Administration, Northwest Mountain Region, Transport Airplane Directorate, ANM-103, Attention: Airworthiness Rules Docket No. 90-NM-52-AD, 17900 Pacific Highway South, C-68966, Seattle, Washington 98168. The applicable service information may be obtained from Airbus Industrie, Airbus Support Division, Avenue Didier Daurat, 31700 Blagnac, France. This information may be examined at the FAA, Northwest Mountain Region, Transport Airplane Directorate, 17900 Pacific Highway South, Seattle, Washington, or the Standardization Branch, 9010 East Marginal Way South, Seattle, Washington.

FOR FURTHER INFORMATION CONTACT: Mr. Greg Holt, Standardization Branch, ANM-113; telephone (206) 431-1918. Mailing address: FAA, Northwest Mountain Region, 17900 Pacific Highway South, C-68966, Seattle, Washington 98168.

SUPPLEMENTARY INFORMATION: Interested persons are invited to participate in the making of the proposed rule by submitting such written data, views, or arguments as they may desire. Communications should identify the regulatory docket number and be submitted in duplicate to the address specified above. All communications received on or before the closing date for comments specified above will be considered by the Administrator before taking action on the proposed rule. The proposals contained in this Notice may be changed in light of the comments received.

Comments are specifically invited on the overall regulatory, economic, environmental, and energy aspects of the proposed rule. All comments submitted will be available, both before and after the closing date for comments, in the Rules Docket for examination by interested persons. A report summarizing each FAA/public contact, concerned with the substance of this proposal, will be filed in the Rules Docket.

Commenters wishing the FAA to acknowledge receipt of their comments submitted in response to this Notice must submit a self-addressed, stamped post card on which the following statement is made: "Comments to Docket Number 90-NM-52-AD." The post card will be date/time stamped and returned to the commenter.

Discussion

The Direction Generale de L'Aviation Civile (DGAC), which is the airworthiness authority of France, in accordance with existing provisions of a bilateral airworthiness agreement, has notified the FAA of an unsafe condition which may exist on certain Airbus Industrie Model A300, A310, and A300-600 series airplanes. There have been recent reports of traces of corrosion on the percussion system and on the center piston components of the exit door opening system discovered during emergency opening of the passenger/crew door. This condition, if not corrected, could result in failure of the passenger/crew door to open in an emergency situation.

Airbus Industrie has issued Service Bulletins A300-52-130, A310-52-2018, and A300-52-6008, all dated December 12, 1985, which describe procedures for repetitive inspections to detect corrosion in the passenger/crew door dampers and emergency operation cylinders, and repair, if necessary. The above referenced service bulletins reference Ratier-Figeac Service Bulletin 701-2650-52-3. The DGAC has classified these service bulletins as mandatory, and has issued Airworthiness Directive 89-092-095(B) addressing this subject.

Airbus Industrie has also issued Service Bulletins A300-52-132, Revision 2, dated October 9, 1987; A300-52-6010, Revision 3, dated July 15, 1989; and A310-52-2020, Revision 4, dated July 15, 1989; which describe procedures for modification of the passenger/crew door dampers and emergency operation cylinder strikers, which, if incorporated, terminates the need for the repetitive inspections. The above referenced service bulletins reference Ratier-Figeac Service Bulletin 701-5000-52-5. The DGAC has not classified these service bulletins as mandatory.

This airplane model is manufactured in France and type certificated in the United States under the provisions of § 21.29 of the Federal Aviation Regulations and the applicable bilateral airworthiness agreement.

Since this condition is likely to exist or develop on other airplanes of the same type design registered in the United States, an AD is proposed which would require repetitive inspections to detect corrosion in the passenger/crew door dampers and emergency operation cylinders, and repair, if necessary, in accordance with the service bulletins previously described. An optional modification is provided which, if installed, would terminate the requirement for repetitive inspections.

It is estimated that 103 airplanes of U.S. registry would be affected by this AD, that it would take approximately 9 manhours per airplane to accomplish the required action, and that the average labor cost would be $40 per manhour. Based on these figures, the total cost impact of the AD on U.S. operators is estimated to be $37,080.

The regulations proposed herein would not have substantial direct effects on the States, on the relationship between the national government and the States, or on the distribution of power and responsibilities among the various levels of government. Therefore, in accordance with Executive Order 12612, it is determined that this proposal would not have sufficient federalism implications to warrant the preparation of a Federalism Assessment.

For the reasons discussed above, I certify that this proposed regulation (1) is not a "major rule" under Executive Order 12291; (2) is not a "significant rule" under DOT Regulatory Policies and Procedures (44 FR 11034; February 26, 1979); and (3) if promulgated, will not have a significant economic impact, positive or negative, on a substantial number of small entities under the criteria of the Regulatory Flexibility Act. A copy of the draft evaluation prepared for this action is contained in the regulatory docket. A copy of it may be obtained from the Rules Docket.

List of Subjects in 14 CFR Part 39

Air transportation, Aircraft, Aviation safety, Safety.

The Proposed Amendment

Accordingly, pursuant to the authority delegated to me by the Administrator, the Federal Aviation Administration proposes to amend 14 CFR part 39 of the Federal Aviation Regulations as follows:

PART 39—[AMENDED]

1. The authority citation for part 39 continues to read as follows:

Authority: 49 U.S.C. 1354(a), 1421 and 1423; 49 U.S.C. 106(g) (Revised Pub. L. 97-449, January 12, 1983); and 14 CFR 11.89.

§ 39.13 [Amended]

2. Section 39.13 is amended by adding the following new airworthiness directive:

Airbus Industrie: Applies to Model A300, A310, and A300-600 series airplanes, on which Modification 6240 has not been incorporated, certificated in any category. Compliance is required as indicated, unless previously accomplished.

To detect corrosion in the passenger/crew door emergency operation cylinders, accomplish the following:

A. Within 180 days after the effective date of this AD, and thereafter at intervals not to exceed 18 months, inspect the dampers and emergency operation cylinder strikers, in accordance with Airbus Industrie Service Bulletins A300-52-130, or A300-52-6010, or A310-52-2020, all dated December 12, 1985, as applicable.

Note: The above-referenced service bulletins reference Ratier-Figeac Service Bulletin No. 701-2650-52-3 for additional instructions.

B. If corrosion is found, repair, prior to further flight, in accordance with Ratier-Figeac Service Bulletin No. 701-2650-52-3.

C. Incorporation of Modification 6240, in accordance with Airbus Industrie Service Bulletins A300-52-132, Revision 2, dated October 9, 1987; or A300-52-6010, Revision 3, dated July 15, 1989; or A310-52-2020, Revision 4, dated July 15, 1989; as applicable, constitutes terminating action for the repetitive inspection required by paragraph A., above.

Note: The above referenced service bulletins reference Ratier-Figeac Service Bulletin No. 701-5000-52-5 and 701-5000-52-7 for additional modification instructions.

D. An alternate means of compliance or adjustment of the compliance time, which provides an acceptable level of safety, may be used when approved by the Manager, Standardization Branch, ANM-113, FAA, Northwest Mountain Region.

Note: The request should be forwarded through an FAA Principal Maintenance Inspector (PMI), who will either concur or comment and then send it to the Manager, Standardization Branch, ANM-113.

E. Special flight permits may be issued in accordance with FAR 21.197 and 21.199 to operate airplanes to a base in order to comply with the requirements of this AD.

All persons affected by this directive who have not already received the appropriate service documents from the manufacturer may obtain copies upon request to Airbus Industrie, Airbus Support Division, Avenue Didier Daurat, 31700 Blagnac, France. These documents may be examined at the FAA, Northwest Mountain Region, Transport Airplane Directorate, 17900 Pacific Highway South, Seattle, Washington, or the Standardization Branch, 9010 East Marginal Way South, Seattle, Washington.

Issued in Seattle, Washington, on April 19, 1990.

Darrell M. Pederson,

Acting Manager, Transport Airplane Directorate, Aircraft Certification Service.

[FR Doc. 90-9921 Filed 4-27-90; 8:45 am]

BILLING CODE 4910-13-M

---

14 CFR Part 39

[Docket No. 90-NM-47-AD]

Airworthiness Directives; Boeing Model 727-100 and -100C Series Airplanes

AGENCY: Federal Aviation Administration (FAA), DOT.

ACTION: Notice of proposed rulemaking (NPRM).

SUMMARY: This notice proposes to adopt a new airworthiness directive (AD), applicable to Boeing Model 727-100 and -100C series airplanes, which would require inspection and repair, if necessary, of the fuselage crown skin at body station (BS) 1080. This proposal is prompted by reports of delamination, corrosion, and/or cracking. This condition, if not corrected, could result in loss of cabin pressure.

DATES: Comments must be received no later than June 19, 1990.

ADDRESSES: Send comments on the proposal in duplicate to the Federal Aviation Administration, Northwest Mountain Region, Transport Airplane Directorate, ANM-103, Attention: Airworthiness Rules Docket No. 90-NM-47-AD, 17900 Pacific Highway South, C-68966, Seattle, Washington 98168. The applicable service information may be obtained from Boeing Commercial Airplanes, P.O. Box 3707, Seattle, Washington 98124. This information may be examined at the FAA, Northwest Mountain Region, Transport Airplane Directorate, 17900 Pacific Highway South, Seattle, Washington, or Seattle Aircraft Certification Office, 9010 East Marginal Way South, Seattle, Washington.

FOR FURTHER INFORMATION CONTACT: Mr. Stanton R. Wood, Airframe Branch, ANM-120S; telephone (206) 431-1924. Mailing address: FAA, Northwest Mountain Region, 17900 Pacific Highway South, C-68966, Seattle, Washington 98168.

SUPPLEMENTARY INFORMATION: Interested persons are invited to participate in the making of the proposed rule by submitting such written data, views, or arguments as they may desire. Communications should identify the regulatory docket number and be submitted in duplicate to the address specified above. All communications received on or before the closing date for comments specified above will be considered by the Administrator before taking action on the proposed rule. The proposals contained in this Notice may be changed in light of the comments received.

Comments are specifically invited on the overall regulatory, economic, environmental, and energy aspects of the proposed rule. All comments submitted will be available, both before and after the closing date for comments, in the Rules Docket for examination by interested persons. A report summarizing each FAA/public contact, concerned with the substance of this proposal, will be filed in the Rules Docket.

Commenters wishing the FAA to acknowledge receipt of their comments submitted in response to this Notice must submit a self-addressed, stamped post card on which the following statement is made: "Comments to Docket Number 90-NM-47-AD." The post card will be date/time stamped and returned to the commenter.

Discussion

There have been several reported cases of delamination and corrosion of the skin and cold-bonded doubler at the body station (BS) 1080 circumferential joint between stringer (S) 10L and S-10R on Boeing Model 727-100 and -100C series airplanes. Delamination and subsequent corrosion at the faying surfaces of the skin and cold-bonded doubler is attributed to exposure to moisture or high humidity. This condition, if not corrected, could result in loss of cabin pressure.

The FAA has reviewed and approved Boeing Service Bulletin 727-53-0109, Revision 3, dated September 28, 1989, which describes procedures for visual and eddy current inspections, repair, and installation of a preventive modification at the fuselage crown skin circumferential joint bonded doubler at BS 1080.

Since this condition is likely to exist or develop on other airplanes of this same type design, an AD is proposed which would require inspection and repair, if necessary, of the bonded joint in accordance with the service bulletin previously described.

There are approximately 397 Model 727-100 and -100C series airplanes of the affected design in the worldwide fleet. It is estimated that 288 airplanes of U.S. registry would be affected by this AD, that it would take approximately 84 manhours per airplane to accomplish the required actions, and that the average labor cost would be $40 per manhour. Based on these figures, the total cost impact of the AD on U.S. operators is estimated to be $967,680.

The regulations proposed herein would not have substantial direct effects on the States, on the relationship between the national government and the States, or on the distribution of power and responsibilities among the various levels of government. Therefore, in accordance with Executive Order 12612, it is determined that this proposal would not have sufficient federalism implications to warrant the preparation of a Federalism Assessment.

For the reasons discussed above, I certify that this proposed regulation (1) Is not a "major rule" under Executive Order 12291; (2) is not a "significant rule" under DOT Regulatory Policies and Procedures (44 FR 11034; February 26, 1979); and (3) if promulgated, will not have a significant economic impact, positive or negative, on a substantial number of small entities under the criteria of the Regulatory Flexibility Act. A copy of the draft evaluation prepared for this action is contained in the regulatory docket. A copy of it may be obtained from the Rules Docket.

List of Subjects in 14 CFR Part 39

Air transportation, Aircraft, Aviation safety, Safety.

The Proposed Amendment

Accordingly, pursuant to the authority delegated to me by the Administrator, the Federal Aviation Administration proposes to amend 14 CFR part 39 of the Federal Aviation Regulations as follows:

PART 39—[AMENDED]

The authority citation for part 39 continues to read as follows:

Authority: 49 U.S.C. 1354(a), 1421 and 1423; 49 U.S.C. 106(g) (Revised Pub. L. 97-449, January 12, 1983); and 14 CFR 11.89.

§ 39.13 [Amended]

2. Section 39.13 is amended by adding the following new airworthiness directive:

Boeing: Applies to Model 727-100 and -100C series airplanes, listed in Boeing Service Bulletin 727-53-0109, Revision 3, dated September 28, 1989, certificated in any category. Compliance required as indicated, unless previously accomplished.

To detect delamination, cracking, and/or corrosion of fuselage crown skin circumferential joint at body station (BS) 1080 and to prevent depressurization, accomplish the following:

A. For airplanes modified in accordance with part IV of Boeing Service Bulletin 727-53-0109, Revision 3, dated September 28, 1989: Within the next 15 months after the effective date of this AD, accomplish an internal close visual inspection in accordance with the Note in part I.A of the service bulletin.

1. If no corrosion is detected, repeat the inspection at intervals not to exceed 30 months.

2. If corrosion is detected, repair prior to further flight, in accordance with part III of the service bulletin.

B. For airplanes not modified in accordance with part IV of Boeing Service Bulletin 727-53-0109, Revision 3, dated September 28, 1989: Within the next 15 months after the effective date of this AD, accomplish an external visual inspection in accordance with part II.A of the service bulletin and a low frequency eddy current (LFEC) inspection in accordance with part II.B of the service bulletin. Perform an internal close visual inspection within 15 months after the external inspection, in accordance with part II.C of the service bulletin.

1. If no corrosion is detected, repeat the external visual inspection at intervals not to exceed 15 months and, the LFEC inspection and internal close visual inspection at intervals not to exceed 30 months.

2. If corrosion is detected, repair prior to further flight, in accordance with part III of the service bulletin.

C. Within the next 3,000 landings or 30 months after the effective date of this AD, whichever occurs first, accomplish a high frequency eddy current (HFEC) inspection in accordance with part II.D of Boeing Service Bulletin 727-53-0109, Revision 3, dated September 28, 1989.

1. If no cracking is detected, repeat the inspection at intervals not to exceed 4,000 landings or 48 months, whichever occurs first.

2. If cracking is detected, repair prior to further flight, in accordance with part III or IV of the service bulletin.

D. Modification in accordance with part III of Boeing Service Bulletin 727-53-0109, Revision 3, dated September 28, 1989, terminates the inspections required by this AD.

E. Modification in accordance with part IV or part V of Boeing Service Bulletin 727-53-0109, Revision 3, dated September 28, 1989, terminates the inspections required by paragraph C. of this AD.

F. An alternate means of compliance or adjustment of the compliance time, which provides an acceptable level of safety, may be used when approved by the Manager, Seattle Aircraft Certification Office, FAA, Northwest Mountain Region.

Note: The request should be forwarded through an FAA Principal Maintenance Inspector (PMI), who will either concur or comment, and then send it to the Manager, Seattle Aircraft Certification Office.

G. Special flight permits may be issued in accordance with FAR 21.197 and 21.199 to operate airplanes to a base in order to comply with the requirements of this AD.

All persons affected by this directive who have not already received the appropriate service documents from the manufacturer may obtain copies upon request to Boeing Commercial Airplanes, P.O. Box 3707, Seattle, Washington 98124. These documents may be examined at the FAA, Northwest Mountain Region, Transport Airplane Directorate, 17900 Pacific Highway South, Seattle, Washington, or Seattle Aircraft Certification Office, 9010 East Marginal Way South, Seattle, Washington.

Issued in Seattle, Washington, on April 19, 1990.

Leroy A. Keith,

Manager, Transport Airplane Directorate, Aircraft Certification Service.

[FR Doc. 90-9923 Filed 4-27-90; 8:45 am]

BILLING CODE 4910-13-M

---

14 CFR Part 39

[Docket No. 90-NM-59-AD]

Airworthiness Directives; Empresa Brasileira de Aeronautica, S.A. (EMBRAER) Model EMB-120 Series Airplanes

AGENCY: Federal Aviation Administration (FAA), DOT.

ACTION: Notice of proposed rulemaking (NPRM).

SUMMARY: This notice proposes to adopt a new airworthiness directive (AD), applicable to certain EMBRAER Model EMB-120 series airplanes, which would require the installation of an electromechanical lockout device to prevent movement of the power control levers below the flight idle position while the airplane is in flight. This proposal is prompted by reports of propeller overspeed which could have resulted from inadvertent movement of the power control levers below flight idle during flight. This condition, if not corrected, could result in the failure of one or both engines.

DATES: Comments must be received no later than June 19, 1990.

ADDRESSES: Send comments on the proposal in duplicate to the Federal Aviation Administration, Northwest Mountain Region, Transport Airplane Directorate, ANM-103, Attention:

Airworthiness Rules Docket No. 90-NM-59-AD, 17900 Pacific Highway South, C-68966, Seattle, Washington 98168. The applicable service information may be obtained from EMBRAER, 276 SW. 34th Street, Fort Lauderdale, Florida 33315. This information may be examined at the FAA, Northwest Mountain Region, Transport Airplane Directorate, 17900 Pacific Highway South, Seattle, Washington, or at the FAA, Central Region, Atlanta Aircraft Certification Office, 1669 Phoenix Parkway, Suite 210C, Atlanta, Georgia.

FOR FURTHER INFORMATION CONTACT: Mr. Gilbert Carter, Propulsion Branch, ACE-140A; telephone (404) 991-3810. Mailing address: FAA, Atlanta Aircraft Certification Office, 1669 Phoenix Parkway, Suite 210C, Atlanta, Georgia 30349.

SUPPLEMENTARY INFORMATION: Interested persons are invited to participate in the making of the proposed rule by submitting such written data, views, or arguments as they may desire. Communications should identify the regulatory docket number and be submitted in duplicate to the address specified above. All communications received on or before the closing date for comments specified above will be considered by the Administrator before taking action on the proposed rule. The proposals contained in this Notice may be changed in light of the comments received.

Comments are specifically invited on the overall regulatory, economic, environmental, and energy aspects of the proposed rule. All comments submitted will be available, both before and after the closing date for comments, in the Rules Docket for examination by interested persons. A report summarizing each FAA/public contact, concerned with the substance of this proposal, will be filed in the Rules Docket.

Commenters wishing the FAA to acknowledge receipt of their comments submitted in response to this Notice must submit a self-addressed, stamped post card on which the following statement is made: "Comments to Docket Number 90-NM-59-AD." The post card will be date/time stamped and returned to the commenter.

Discussion

The Centro Tecnico Aeroespacial (CTA), which is the airworthiness authority of Brazil, in accordance with existing provisions of a bilateral airworthiness agreement, has notified the FAA of an unsafe condition which may exist on certain EMBRAER Model EMB-120 series airplanes. In May 1988 an EMBRAER Model EMB-120 series airplane experienced a propeller overspeed that destroyed the engine. Since then, there have been seven additional propeller overspeed incidents reported. Intensive analysis, tests, and investigations failed to reveal a design-induced cause for the propeller overspeed occurrence. However, the investigation, which included a failure analysis of the design of the overspeed protection, did reveal that overspeed will occur if propeller settings not intended for use in flight are commanded. This condition, if not corrected, could result in the failure of one or both engines.

To eliminate this possibility, the manufacturer has developed an electromechanical lockout device which prevents moving the power control levers below the flight idle position while the airplane is in flight. The lockout device is deactivated when weight is on the main landing gear.

EMBRAER has issued Service Bulletin 120-076-0009, Revision 1, dated February 23, 1990, which describes procedures to install the electromechanical lockout device. The CTA has classified this service bulletin as mandatory and has issued an airworthiness directive addressing this subject.

This airplane model is manufactured in Brazil and type certificated in the United States under the provisions of § 21.29 of the Federal Aviation Regulations and the applicable bilateral airworthiness agreement.

Since this condition is likely to exist or develop on other airplanes of the same type design registered in the United States, an AD is proposed which would require installation of an electromechanical lockout device in accordance with the service bulletin previously described.

It is estimated that 110 airplanes of U.S. registry would be affected by this AD, that it would take approximately 68 manhours per airplane to accomplish the required actions, and that the average labor cost would be $40 per manhour. The estimated cost for the modification kit is $2,700. Based on these figures, the total cost impact of the AD on U.S. operators is estimated to be $596,200.

The regulations proposed herein would not have substantial direct effects on the States, on the relationship between the national government and the States, or on the distribution of power and responsibilities among the various levels of government. Therefore, in accordance with Executive Order 12612, it is determined that this proposal would not have sufficient federalism implications to warrant the preparation of a Federalism Assessment.

For the reasons discussed above, I certify that this proposed regulation (1) Is not a "major rule" under Executive Order 12291; (2) is not a "significant rule" under DOT Regulatory Policies and Procedures (44 FR 11034; February 26, 1979); and (3) if promulgated, will not have a significant economic impact, positive or negative, on a substantial number of small entities under the criteria of the Regulatory Flexibility Act. A copy of the draft evaluation prepared for this action is contained in the regulatory docket. A copy of it may be obtained from the Rules Docket.

List of Subjects in 14 CFR Part 39

Air transportation, Aircraft, Aviation safety, Safety.

The Proposed Amendment

Accordingly, pursuant to the authority delegated to me by the Administrator, the Federal Aviation Administration proposes to amend 14 CFR part 39 of the Federal Aviation Regulations as follows:

PART 39—[AMENDED]

1. The authority citation for part 39 continues to read as follows:

Authority: 49 U.S.C. 1354(a), 1421 and 1423; 49 U.S.C. 106(g) (Revised Pub. L. 97-449, January 12, 1983); and 14 CFR 11.89.

§ 39.13 [Amended]

2. Section 39.13 is amended by adding the following new airworthiness directive:

Empresa Brasileira de Aeronautica, S.A. (Embraer): Applies to EMBRAER Model EMB-120 series airplanes, Serial Numbers 120004 and 120006 through 120177, certificated in any category. Compliance is required within 120 days after the effective date of this AD, unless previously accomplished. To prevent engine failure due to propeller overspeed, accomplish the following:

A. Install a flight idle position electromechanical lockout device in accordance with EMBRAER Service Bulletin Number 120-076-0009, Revision 1, dated February 23, 1990.

B. An alternate means of compliance or adjustment of the compliance time, which provides an acceptable level of safety, may be used when approved by the Manager, Atlanta Aircraft Certification Office, FAA, Central Region.

Note: The request should be forwarded through an FAA Principal Maintenance Inspector (PMI), who will either concur or comment and then send it to the Manager, Atlanta Aircraft Certification Office.

C. Special flight permits may be issued in accordance with FAR 21.197 and 21.199 to operate airplanes to a base in order to comply with the requirements of this AD.

All persons affected by this directive who have not already received the appropriate service documents from the manufacturer may obtain copies upon request to EMBRAER, 276 SW. 34th Street, Fort Lauderdale, Florida 33315. These documents may be examined at the FAA, Northwest Mountain Region, Transport Airplane Directorate, 17900 Pacific Highway South, Seattle, Washington, or at the FAA, Central Region, Atlanta Aircraft Certification Office, 1669 Phoenix Parkway, Suite 210C, Atlanta, Georgia.

Issued in Seattle, Washington, on April 19, 1990.

Darrell M. Pederson,

Acting Manager, Transport Airplane Directorate, Aircraft Certification Service.

[FR Doc. 90-9922 Filed 4-27-90; 8:45 am]

BILLING CODE 4910-13-M

---

14 CFR Part 39

[Docket No. 90-NM-55-AD]

Airworthiness Directives; SAAB-Scania Model SF-340A Series Airplanes

AGENCY: Federal Aviation Administration (FAA), DOT.

ACTION: Notice of proposed rulemaking (NPRM).

SUMMARY: This notice proposes to supersede an existing airworthiness directive (AD), applicable to all SAAB-Scania Model SF-340A series airplanes, which currently requires the modification of the empennage deicer boot system and nacelle inlet protection device. This action would require a repetitive drain check to prevent water from accumulating and subsequently freezing in the elevator deicer boot system. This proposal is prompted by an unanticipated change in a maintenance check interval specified in one of the service bulletins referenced in the AD. This condition, if not corrected, could result in loss of the tail deicer system.

DATES: Comments must be received no later than June 19, 1990.

ADDRESSES: Send comments on the proposal in duplicate to Federal Aviation Administration, Northwest Mountain Region, Transport Airplane Directorate, ANM-103, Attention: Airworthiness Rules Docket No. 90-NM-55-AD, 17900 Pacific Highway South, C-68966, Seattle, Washington 98168. The applicable service information may be obtained from SAAB-Scania Aircraft Division, Product Support, S-581.88, Linkoping, Sweden. This information may be examined at the FAA, Northwest Mountain Region, Transport Airplane Directorate, 17900 Pacific Highway South, Seattle, Washington, or the Standardization Branch, 9010 East Marginal Way South, Seattle, Washington.

FOR FURTHER INFORMATION CONTACT: Mr. Mark Quam, Standardization Branch, ANM-113; telephone (206) 431-1978. Mailing address: FAA, Northwest Mountain Region, 17900 Pacific Highway South, C-68996, Seattle, Washington 98168.

SUPPLEMENTARY INFORMATION: Interested persons are invited to participate in the making of the proposed rule by submitting such written data, views, or arguments as they may desire. Communications should identify the regulatory docket number and be submitted in duplicate to the address specified above. All communications received on or before the closing date for comments specified above will be considered by the Administrator before taking action on the proposed rule. The proposals contained in this Notice may be changed in light of the comments received.

Comments are specifically invited on the overall regulatory, economic, environmental, and energy aspects of the proposed rule. All comments submitted will be available, both before and after the closing date for comments, in the Rules Docket for examination by interested persons. A report summarizing each FAA/public contact, concerned with the substance of this proposal, will be filed in the Rules Docket.

Commenters wishing the FAA to acknowledge receipt of their comments submitted in response to this Notice must submit a self-addressed, stamped post card on which the following statement is made: "Comments to Docket Number 90-NM-55-AD." The post card will be date/time stamped and returned to the commenter.

Discussion

On January 27, 1986, the FAA issued AD 86-04-05, Amendment 39-5229 (51 FR 4298; February 4, 1986), to require modification of the empennage deicer boot system and the nacelle inlet protection device on certain SAAB Fairchild Model SF-340A series airplanes. That action was prompted by reports of water accumulating and subsequently freezing in the empennage deicer boot system, the nacelle inlet protection device drain system, and the engine control cables at the wing fuselage interface. This condition, if not corrected, could result in improper operation of these systems.

Since issuance of that AD, SAAB has issued Revision 2 of Service Bulletin SF340-30-008, dated December 8, 1989, pertaining to the required modification of the empennage deicer boot pneumatic system. This revision to the service bulletin recommends repetitive service checks of the two elevator deicing system drain traps at intervals of seven days, and removal of any accumulated water or ice, if necessary. Without this repetitive check, the possibility exists that water could continue to accumulate in the elevator deicer boot system and not be detected before subsequent freezing would occur.

The Luftfartsverket (LFV), which is the airworthiness authority of Sweden, has classified the revised service bulletin as mandatory.

This airplane model is manufactured in Sweden and type certificated in the United States under the provisions of § 21.29 of the Federal Aviation Regulations and the applicable bilateral airworthiness agreement.

Since this condition is likely to exist or develop on other airplanes of the same type design registered in the United States, an AD is proposed which would supersede AD 86-04-05 with a new airworthiness directive that would continue to require modification of the empennage deicer boot system and the nacelle inlet protection device exhaust nozzle; and would add a requirement for repetitive inspections for water or ice accumulation in the elevator deicing system drain traps, and drainage of water or removal of ice, if necessary, in accordance with the revised service bulletin previously described.

It is estimated that 89 airplanes of U.S. registry would be affected by this AD, that it would take approximately 3 manhours per airplane to accomplish the required actions, and that the average labor cost would be $40 per manhour. Based on these figures, the total cost impact of the AD on U.S. operators is estimated to be $10,680.

The regulations proposed herein would not have substantial direct effects on the States, on the relationship between the national government and the States, or on the distribution of power and responsibilities among the various levels of government. Therefore, in accordance with Executive Order 12612, it is determined that this proposal would not have sufficient federalism implications to warrant the preparation of a Federalism Assessment.

For the reasons discussed above, I certify that this proposed regulation (1) Is not a "major rule" under Executive Order 12291; (2) is not a "significant rule" under DOT Regulatory Policies and Procedures (44 FR 11034; February 26, 1979); and (3) if promulgated, will not

have a significant economic impact, positive or negative, on a substantial number of small entities under the criteria of the Regulatory Flexibility Act. A copy of the draft evaluation prepared for this action is contained in the regulatory docket. A copy of it may be obtained from the Rules Docket.

List of Subjects in 14 CFR Part 39

Air transportation, Aircraft, Aviation safety, Safety.

The Proposed Amendment

Accordingly, pursuant to the authority delegated to me by the Administrator, the Federal Aviation Administration proposes to amend 14 CFR part 39 of the Federal Aviation Regulations as follows:

PART 39—[AMENDED]

The authority citation for part 39 continues to read as follows:

Authority: 49 U.S.C. 1354(a), 1421 and 1423; 49 U.S.C. 106(g) (Revised Pub. L. 97-449, January 12, 1983); and 14 CFR 11.89.

§ 39.13 [Amended]

2. Section 39.13 is amended by superseding Amendment 39-5229 (51 FR 4298; February 4, 1986), AD 86-04-05, with the following new airworthiness directive:

SAAB-Scania: Applies to all Model SF-340A series airplanes, certificated in any category. Compliance is required as indicated, unless previously accomplished.

To prevent moisture accumulation in the elevator deicer boot system, accomplish the following:

A. Within 60 days after March 13, 1986 (the effective date of AD 86-04-05, Amendment 39-5229), accomplish the following:

1. Modify the empennage deicer boot pneumatic system in accordance with SAAB Service Bulletin SF340-30-008, Revision 1, dated February 11, 1985; and

2. Modify the nacelle inlet protection device exhaust nozzle in accordance with SAAB Service Bulletin SF340-54-002, Revision 1, dated April 3, 1985.

B. Within 7 days after the effective date of this amendment, and thereafter at intervals not to exceed 7 days, drain and check the two elevator deicing system drain traps in accordance with paragraph D.(2) of SAAB Service Bulletin SF340-30-008, Revision 2, dated December 8, 1989.

C. An alternate means of compliance or adjustment of the compliance time, which provides an acceptable level of safety, may be used when approved by the Manager, Standardization Branch, ANM-113, FAA, Northwest Mountain Region.

Note: The request should be forwarded through an FAA Principal Maintenance Inspector (PMI), who will either concur or comment and then send it to the Manager, Standardization Branch, ANM-113.

D. Special flight permits may be issued in accordance with FAR 21.197 and 21.199 to operate airplanes to a base in order to comply with the requirements of this AD.

All persons affected by this directive who have not already received the appropriate service documents from the manufacturer may obtain copies upon request to SAAB-Scania, Product Support, S-581.88, Linkoping, Sweden. These documents may be examined at the FAA, Northwest Mountain Region, Transport Airplane Directorate, 17900 Pacific Highway South, Seattle, Washington, or the Standardization Branch, 9010 East Marginal Way South, Seattle, Washington.

Issued in Seattle, Washington, on April 19, 1990.

Darrell M. Pederson,

Acting Manager, Transport Airplane Directorate, Aircraft Certification Service.

[FR Doc. 90-9919 Filed 4-27-90; 8:45 am]

BILLING CODE 4910-13-M

---

14 CFR Part 39

[Docket No. 90-NM-56-AD]

Airworthiness Directives; SAAB-Scania Models SF-340A and SAAB 340B Series Airplanes

AGENCY: Federal Aviation Administration (FAA), DOT.

ACTION: Notice of proposed rulemaking (NPRM).

SUMMARY: This notice proposes to supersede an existing airworthiness directive (AD), applicable to SAAB-Scania Model SF-340A series airplanes, which currently requires repetitive inspection of the vertical stabilizer top closure rib to detect cracks, and repair, if necessary. This action would revise the inspection procedures for detecting fatigue cracks in the vertical stabilizer top closure rib; and would add Model SAAB 340B series airplanes to the applicability of the rule. This proposal is prompted by reports of continued fatigue cracks in the vertical stabilizer top closure rib. This condition, if not corrected, could result in jamming of the rudder.

DATES: Comments must be received no later than June 19, 1990.

ADDRESSES: Send comments on the proposal in duplicate to Federal Aviation Administration, Northwest Mountain Region, Transport Airplane Directorate, ANM-103, Attention: Airworthiness Rules Docket No. 90-NM-56-AD, 17900 Pacific Highway South, C-68966, Seattle, Washington 98168. The applicable service information may be obtained from SAAB-Scania AB, Product Support, S-581.88, Linköping, Sweden. This information may be examined at the FAA, Northwest Mountain Region, Transport Airplane Directorate, 17900 Pacific Highway South, Seattle, Washington, or the Standardization Branch, 9010 East Marginal Way South, Seattle, Washington.

FOR FURTHER INFORMATION CONTACT: Mr. Mark Quam, Standardization Branch, ANM-113; telephone (206) 431-1978. Mailing address: FAA, Northwest Mountain Region, 17900 Pacific Highway South, C-68996, Seattle, Washington 98168.

SUPPLEMENTARY INFORMATION: Interested persons are invited to participate in the making of the proposed rule by submitting such written data, views, or arguments as they may desire. Communications should identify the regulatory docket number and be submitted in duplicate to the address specified above. All communications received on or before the closing date for comments specified above will be considered by the Administrator before taking action on the proposed rule. The proposals contained in this Notice may be changed in light of the comments received.

Comments are specifically invited on the overall regulatory, economic, environmental, and energy aspects of the proposed rule. All comments submitted will be available, both before and after the closing date for comments, in the Rules Docket for examination by interested persons. A report summarizing each FAA/public contact, concerned with the substance of this proposal, will be filed in the Rules Docket.

Commenters wishing the FAA to acknowledge receipt of their comments submitted in response to this Notice must submit a self-addressed, stamped post card on which the following statement is made: "Comments to Docket Number 90-NM-56-AD." The post card will be date/time stamped and returned to the commenter.

Discussion

On June 15, 1988, the FAA issued AD 88-13-10, Amendment 39-5963 (53 FR 23754; June 24, 1988), to require repetitive inspections of the vertical stabilizer top closure rib for cracks, and repair, if necessary. That action was prompted by reports of fatigue cracks that had occurred in the vertical stabilizer top closure rib. This condition, if not corrected, could result in jamming of the rudder.

Since issuance of that AD, there have been reports of fatigue cracks continuing to be found in the area of the vertical

stabilizer top closure rib. In addition, cracking has been found in this area on airplanes that have accomplished the replacement and reinforcement procedures, described in SAAB Service Bulletin 340-55-012, dated June 23, 1989, which were approved by the FAA as terminating action for the repetitive inspections required by AD 88-13-10 (under the alternate means of compliance provision of that AD). In light of this, it is apparent that the currently required inspection procedures and previously approved terminating actions are not adequate to detect or correct fatigue cracking in the vertical top closure rib.

SAAB has issued Service Bulletin 340-55-022, dated February 27, 1990, which describes a new inspection program designed to detect fatigue cracking in the vertical stabilizer top closure rib, including airplanes previously modified, and repair, if necessary. This service bulletin has added the Model 340B to the effectivity, since it has been determined that this model airplane is also subject to fatigue cracking in the affected area. The Luftfartsverket (LFV), which is the airworthiness authority of Sweden, has classified this service bulletin as mandatory, and has issued Swedish Airworthiness Directive SAD No. 1-036 (which cancels SAD No 1-026, Revision A) addressing this subject.

This airplane model is manufactured in Sweden and type certificated in the United States under the provisions of § 21.29 of the Federal Aviation Regulations and the applicable bilateral airworthiness agreement.

Since this condition is likely to exist or develop on other airplanes of the same type design registered in the United States, a new AD is proposed which would supersede AD 88-13-10 to require repetitive inspections and repair, if necessary, of the vertical stabilizer top closure rib, in accordance with SAAB Service Bulletin 340-55-022, described above.

This is considered to be interim action. SAAB is currently developing a design modification to address the cracking problem. When that modification becomes available, the FAA may consider further rulemaking to include it as terminating action for the requirements of this AD.

It is estimated that 95 airplanes of U.S. registry would be affected by this AD, that it would take approximately .5 manhour per airplane to accomplish the required actions, and that the average labor cost would be $40 per manhour. Based on these figures, the total cost impact of the AD on U.S. operators is estimated to be $1,900.

The regulations proposed herein would not have substantial direct effects on the States, on the relationship between the national government and the States, or on the distribution of power and responsibilities among the various levels of government. Therefore, in accordance with Executive Order 12612, it is determined that this proposal would not have sufficient federalism implications to warrant the preparation of a Federalism Assessment.

For the reasons discussed above, I certify that this proposed regulation (1) is not a "major rule" under Executive Order 12291; (2) is not a "significant rule" under DOT Regulatory Policies and Procedures (44 FR 11034; February 26, 1979); and (3) if promulgated, will not have a significant economic impact, positive or negative, on a substantial number of small entities under the criteria of the Regulatory Flexibility Act. A copy of the draft evaluation prepared for this action is contained in the regulatory docket. A copy of it may be obtained from the Rules Docket.

List of Subjects in 14 CFR Part 39

Air transportation, Aircraft, Aviation safety, Safety.

The Proposed amendment

Accordingly, pursuant to the authority delegated to me by the Administrator, the Federal Aviation Administration proposes to amend 14 CFR part 39 of the Federal Aviation Regulations as follows:

PART 39—[AMENDED]

1. The authority citation for part 39 continues to read as follows:

Authority: 49 U.S.C. 1354(a), 1421 and 1423; 49 U.S.C. 106(g) (Revised Pub. L. 97-449, January 12, 1983); and 14 CFR 11.89.

§ 39.13 [Amended]

2. Section 39.13 is amended by superseding Amendment 39-5963 (53 FR 23754; June 24, 1988), AD 88-13-10, with the following new airworthiness directive:

SAAB-Scania: Applies to Model SF-340A series airplanes, Serial Number 031 through 159; and SAAB 340B series airplanes, Serial Numbers 160 through 194; certificated in any category. Compliance is required as indicated, unless previously accomplished.

To prevent inhibited airplane rudder control due to cracking in the vertical stabilizer top closure rib, accomplish the following:

A. Prior to the accumulation of 500 hours time-in-service since new or within 100 hours time-in-service after the effective date of this amendment, whichever occurs later, inspect the vertical stabilizer top closure rib for evidence of cracking, in accordance with SAAB Service Bulletin 340-55-022, Revision 1, dated February 27, 1990.

B. If no evidence of cracking is found, reinspect the vertical stabilizer top closure rib for cracking at intervals not to exceed 500 flight hours time-in-service.

C. If cracking is found, prior to further flight, stop drill the ends of the cracks, blend, clean, and apply aluminum tape, as specified in SAAB Service Bulletin 340-55-022, Revision 1, dated February 27, 1990. Reinspect for additional cracking and the condition of the aluminum tape at intervals not to exceed 100 hours time-in-service.

D. An alternate means of compliance or adjustment of the compliance time, which provides an acceptable level of safety, may be used when approved by the Manager, Standardization Branch, ANM-113, FAA, Northwest Mountain Region.

Note: The request should be forwarded through an FAA Principal Maintenance Inspector (PMI), who will either concur or comment and then send it to the Manager, Standardization Branch, ANM-113.

E. Special flight permits may be issued in accordance with FAR 21.197 and 21.199 to operate airplanes to a base in order to comply with the requirements of this AD.

All persons affected by this directive who have not already received the appropriate service documents from the manufacturer may obtain copies upon request to SAAB-Scania AB, Product Support, S-581.88, Linköping, Sweden. These documents may be examined at the FAA, Northwest Mountain Region, Transport Airplane Directorate, 17900 Pacific Highway South, Seattle, Washington, or Seattle Aircraft Certification Office, 9010 East Marginal Way South, Seattle, Washington.

Issued in Seattle, Washington, on April 19, 1990. .

Darrell M. Pederson,

Acting Manager, Transport Airplane Directorate, Aircraft Certification Service.

[FR Doc. 90-9918 Filed 4-27-90; 8:45 am]

BILLING CODE 4910-13-M

---

14 CFR Part 39

[Docket No. 90-NM-51-AD]

Airworthiness Directives; Aerospatiale Model SN 601 (Corvette) Series Airplanes

AGENCY: Federal Aviation Administration (FAA), DOT.

ACTION: Notice of proposed rulemaking (NPRM).

SUMMARY: This notice proposes to adopt a new airworthiness directive (AD), applicable to all Aereospatiale Model SN 601 Corvette series airplanes, which would require repetitive high frequency

eddy current inspections to detect cracks in the left-hand inner beam stiffeners between fuselage Frame 16 and Frame 20, and repair, if necessary, and eventual replacement of all left-hand inner beam stiffeners between fuselage Frame 16 and Frame 20. This proposal is prompted by reports of fatigue cracks found in the left-hand inner beam stiffeners between Frame 16 and Frame 20. This condition, if not corrected, could result in reduced structural integrity of the fuselage.

DATES: Comments must be received no later than June 20, 1990.

ADDRESSES: Send comments on the proposal in duplicate to the Federal Aviation Administration, Northwest Mountain Region, Transport Airplane Directorate, ANM-103, Attention: Airworthiness Rules Docket No. 90-NM-51-AD, 17900 Pacific Highway South, C-68966, Seattle, Washington 98168. The applicable service information may be obtained from Aerospatiale, 316 Route de Bayonne, 31060 Toulouse, Cedex 03, France. This information may be examined at the FAA, Northwest Mountain Region, Transport Airplane Directorate, 17900 Pacific Highway South, Seattle, Washington, or the Standardization Branch, 9010 East Marginal Way South, Seattle, Washington.

FOR FURTHER INFORMATION CONTACT: Mr. Robert Huhn, Standardization Branch, ANM-113, telephone (206) 431-1950. Mailing address: FAA, Northwest Mountain Region, 17900 Pacific Highway South, C-68966, Seattle, Washington 98168.

SUPPLEMENTARY INFORMATION: Interested persons are invited to participate in the making of the proposed rule by submitting such written data, views, or arguments as they may desire. Communications should identify the regulatory docket number and be submitted in duplicate to the address specified above. All communications received on or before the closing date for comments specified above will be considered by the Administrator before taking action on the proposed rule. The proposals contained in this Notice may be changed in light of the comments received.

Comments are specifically invited on the overall regulatory, economic, environmental, and energy aspects of the proposed rule. All comments submitted will be available, both before and after the closing date for comments, in the Rules Docket for examination by interested persons. A report summarizing each FAA/public contact, concerned with the substance of this proposal, will be filed in the Rules Docket.

Commenters wishing the FAA to aknowledge receipt of their comments submitted in response to this Notice must submit a self-addressed, stamped post card on which the following statement is made: "Comments to Docket Number 90-NM-51-AD." The post card will be date/time stamped and returned to the commenter.

Discussion

The Direction generale de L'Aviation Civile (DGAC), which is the airworthiness authority of France, in accordance with existing provisions of a bilateral airworthiness agreement, has notied the FAA of an unsafe condition which may exist on all Aerospatiale Model SN 601 Corvette series airplanes. There have been recent reports of cracks found in the left-hand beam stiffeners between fuselage Frame 16 and Frame 20. Cracking has been attributed to fatigue. This condition, if not corrected, could result in reduced structural integrity of the fuselage.

Aerospatiale has issued Corvette SN 601 Service Bulletin 53-18, Revision 1, dated January 22, 1990, which describes procedures for repetitive high frequency eddy current inspections to detect cracks in the left-hand inner beam stiffeners between Frame 16 and Frame 20. Aerospatiale has also issued Corvette SN 601 Service Bulletin 53-11, Revision 2, dated January 15, 1990, which describes procedures for replacement of the left-hand inner beam stiffeners between Frame 16 and Frame 20. The DGAC has classified these service bulletins as mandatory.

This airplane model is manufactured in France and type certificated in the United States under the provisions of section 21.29 of the Federal Aviation Regulations and the applicable bilateral airworthiness agreement.

Since his condition is likely to exist or develop on other airplanes of the same type design registered in the United States, an AD is proposed which would require repetitive high frequency eddy current inspections to detect fatigue cracks in the left-hand inner beam stiffeners between Frame 16 and Frame 20, and replacement of stiffeners, if necessary, and eventual replacement of all stiffeners, in accordance with the service bulletins previously described.

It is estimated that one airplane of U.S. registry would be affected by this AD, that it would take approximately 9 manhours per airplane to accomplish the required actions, and that the average labor cost would be $40 per manhour. The estimated cost for the required modification kit is $1,725. Based on these figures, the total cost impact of the AD on U.S. operators is estimated to be $2,085 for the initial inspection cycle and modification.

The regulations proposed herein would not have substantial direct effects on the States, on the relationship between the national government and the States, or on the distribution of power and responsibilities among the various levels of government. Therefore, in accordance with Executive Order 12612, it is determined that this proposal would not have sufficient federalism implications to warrant the preparation of a Federalism Assessment.

For the reasons discussed above, I certify that this proposed regulation (1) is not a "major rule" under Executive Order 12291; (2) is not a "significant rule" under DOT Regulatory Policies and Procedures (44 FR 11034; February 26, 1979); and (3) if promulgated, will not have a significant economic impact, positive or negative, on a substantial number of small entities under the criteria on the Regulatory Flexibility Act. A copy of the draft evaluation prepared for this action is contained in the regulatory docket. A copy of it may be obtained from the Rules Docket.

List of Subjects in 14 CFR Part 39

Air transportation, Aircraft, Aviation safety, Safety.

The Proposed Amendment

Accordingly, pursuant to the authority delegated to me by the Administrator, the Federal Aviation Administration proposed to amend 14 CFR part 39 of the Federal Aviation Regulations as follows:

PART 39—[AMENDED]

1. The authority citation for part 39 continues to read as follows:

Authority: 49 U.S.C. 1354(a), 1421 and 1423; 49 U.S.C. 106(g) (Revised Pub. L. 97-449, January 12, 1983); and 14 CFR 11.89.

§ 39.13 [Amended]

2. Section 39.13 is amended by adding the following new airworthiness directive:

Aerospatiale: Applies to all Model Corvette SN 601 series airplanes that have not incorporated Modification No. 1397, certificated in any category. Compliance is required as indicated, unless previously accomplished.

To prevent reduced structural integrity of the fuselage, accomplish the following:

A. Prior to the accumulation of 9,800 landings or within 100 landings after the effective date of this AD, whichever occurs later, perform a high frequency eddy current inspection of the left-hand inner beam between Frame 16 anf Frame 20, in accordance with Corvette SN 601 Service

Bulletin 53-18, Revision 1, dated January 22, 1990.

B. If no cracks are found, repeat the inspection required by paragraph A., above, at intervals not to exceed 3,900 landings.

C. If cracks are found, modify prior to further flight, in accordance with Corvette SN 601 Service Bulletin 53-11, Revision 2, dated January 15, 1990. Incorporation of this modification (No. 1397) constitutes terminating action for the repetitive inspections required by paragraph B., above.

D. Within one year after the effective date of this AD, replace all left-hand inner beam stiffeners between Frame 16 and Frame 20, in accordance with Corvette SN 601 Service Bulletin 53-11, Revision 2, dated January 15, 1990. Incorporation of this modification (No. 1397) constitutes terminating action for the repetitive inspections required by paragraph B., above.

E. An alternate means of compliance or adjustment of the compliance time, which provides an acceptable level of safety, may be used when approved by the Manager, Standardization Branch, ANM-113, FAA, Northwest Mountain Region.

Note: The request should be forwarded through an FAA Principal Maintenance Inspector (PMI), who will either concur or comment and then send it to the Manager, Standardization Branch, ANM-113.

F. Special flight permits may be issued in accordance with FAR 21.197 and 21.199 to operate airplanes to a base in order to comply with the requirements of this AD.

All persons affected by this directive who have not already received the appropriate service documents from the manufacturer may obtain copies upon request to Aerospatiale, 316 Route de Bayonne, 31060 Toulouse, Cedex 03, France. These documents may be examined at the FAA, Northwest Mountain Region, Transport Airplane Directorate, 17900 Pacific Highway South, Seattle, Washington, or the Standardization Branch, 9010 East Marginal Way South, Seattle, Washington.

Issued in Seattle, Washington, on April 20, 1990.

Darrell M. Pederson,

Acting Manager, Transport Airplane Directorate, Aircraft Certification Service.

[FR Doc. 90-9946 Filed 4-27-90; 8:45 am]

BILLING CODE 4910-13-M

---

14 CFR Part 39

[Docket No. 90-NM-58-AD]

Airworthiness Directives; Boeing Model 747-400 Series Airplanes

AGENCY: Federal Aviation Administration (FAA), DOT.

ACTION: Notice of proposed rulemaking (NPRM).

SUMMARY: This notice proposes to adopt a new airworthiness directive (AD), applicable to certain Boeing Model 747-400 series airplanes, which would require modification of the passenger service unit (PSU) support rails. This proposal is prompted by reports of PSU closure panels falling from the PSU support rails during takeoff and landing. This condition, if not corrected, could result in injury to passengers and could impede evacuation of the passengers in an emergency situation.

DATES: Comments must be received no later than June 19, 1990.

ADDRESSES: Send comments on the proposal in duplicate to the Federal Aviation Administration, Northwest Mountain Region, Transport Airplane Directorate, ANM-103, Attention: Airworthiness Rules Docket No. 90-NM-58-AD, 17900 Pacific Highway South, C-68966, Seattle, Washington 98168. The applicable service information may be obtained from Boeing Commercial Airplane Group, P.O. Box 3707, Seattle, Washington 98124. This information may be examined at the FAA, Northwest Mountain Region, Transport Airplane Directorate, 17900 Pacific Highway South, Seattle, Washington, or at the Seattle Aircraft Certification Office, 9010 East Marginal Way South, Seattle, Washington.

FOR FURTHER INFORMATION CONTACT: Mr. Jayson B. Claar, Airframe Branch, ANM-120S; telephone (206) 431-1932. Mailing address: FAA, Northwest Mountain Region, 17900 Pacific Highway South, C-68966, Seattle, Washington 98168.

SUPPLEMENTARY INFORMATION: Interested persons are invited to participate in the making of the proposed rule by submitting such written data, views, or arguments as they may desire. Communications should identify the regulatory docket number and be submitted in duplicate to the address specified above. All communications received on or before the closing date for comments specified above will be considered by the Administrator before taking action on the proposed rule. The proposals contained in this Notice may be changed in light of the comments received.

Comments are specifically invited on the overall regulatory, economic, environmental, and energy aspects of the proposed rule. All comments submitted will be available, both before and after the closing date for comments, in the Rules Docket for examination by interested persons. A report summarizing each FAA/public contact, concerned with the substance of this proposal, will be filed in the Rules Docket.

Commenters wishing the FAA to acknowledge receipt of their comments submitted in response to this Notice must submit a self-addressed, stamped post card on which the following statement is made: "Comments to Docket Number 90-NM-58-AD." The post card will be date/time stamped and returned to the commenter.

Discussion

Numerous operators have reported that the passenger service unit (PSU) closure panels have fallen during takeoff or landing on Boeing Model 747-400 series airplanes. The PSU closure panels are supported by two rails that run forward and aft in the airplane. One side of the PSU closure panel is hinged to the one rail and the opposite side has a retaining catch to hold it in place. During high vibration (takeoff or landing) the rails separate enough to release the retaining catch and allow the PSU closure to fall. The PSU closure panel swings down about 14 inches when a retaining strap stops the panel. This condition may also allow lightweight PSU spacer panels to fall completely free. This condition, if not corrected, could result in injury to passengers and could impede evacuation of passengers during an emergency situation.

The FAA has reviewed and approved Boeing Service Bulletin Model 747-25-2852, dated March 1, 1990, which describes procedures to install tie bars to the PSU rails to prevent them from separating.

Since this condition is likely to exist or develop on other airplanes of this same type design, an AD is proposed which would require modification of the PSU rails in accordance with the service bulletin previously described.

There are approximately 93 Model 747-400 series airplanes of the affected design in the worldwide fleet. It is estimated that 16 airplanes of U.S. registry would be affected by this AD, that it would take approximately 20 manhours per airplane to accomplish the required actions, and that the average labor cost would be $40 per manhour. Modification parts will be provided by the manufacturer at no cost. Based on these figures, the total cost impact of the AD on U.S. operators is estimated to be $12,800.

The regulations proposed herein would not have substantial direct effects on the States, on the relationship between the national government and the States, or on the distribution of power and responsibilities among the

various levels of government. Therefore, in accordance with Executive Order 12612, it is determined that this proposal would not have sufficient federalism implications to warrant the preparation of a Federalism Assessment.

For the reasons discussed above, I certify that this proposed regulation (1) is not a "major rule" under Executive Order 12291; (2) is not a "significant rule" under DOT Regulatory Policies and Procedures (44 FR 11034; February 26, 1979); and (3) if promulgated, will not have a significant economic impact, positive or negative, on a substantial number of small entities under the criteria of the Regulatory Flexibility Act. A copy of the draft evaluation prepared for this action is contained in the regulatory docket. A copy of it may be obtained from the Rules Docket.

List of Subjects in 14 CFR Part 39

Air transportation, Aircraft, Aviation safety, Safety.

The Proposed Amendment

Accordingly, pursuant to the authority delegated to me by the Administrator, the Federal Aviation Administration proposes to amend 14 CFR part 39 of the Federal Aviation Regulations as follows:

PART 39—[AMENDED]

1. The authority citation for part 39 continues to read as follows:

Authority: 49 U.S.C. 1354(a), 1421 and 1423; 49 U.S.C. 106(g) (Revised Pub. L. 97–449, January 12, 1983); and 14 CFR 11.89.

§ 39.13 [Amended]

2. Section 39.13 is amended by adding the following new airworthiness directive:

Boeing: Applies to Model 747–400 series airplanes, listed in Boeing Service Bulletin 747–25–2853, dated March 1, 1990, certificated in any category. Compliance required within the next 90 days after the effective date of this AD, unless previously accomplished.

To prevent injury to passengers by falling PSU closure panels, accomplish the following:

A. Modify the PSU rails in accordance with Boeing Service Bulletin 747–25–2853, dated March 1, 1990.

B. An alternate means of compliance or adjustment of the compliance time, which provides an acceptable level of safety, may be used when approved by the Manager, Seattle Aircraft Certification Office, FAA, Northwest Mountain Region.

Note: The request should be forwarded through an FAA Principal Maintenance Inspector (PMI), who will either concur or comment, and then send it to the Manager, Seattle Aircraft Certification Office.

C. Special flight permits may be issued in accordance with FAR 21.197 and 21.199 to operate airplanes to a base in order to comply with the requirements of this AD.

All persons affected by this directive who have not already received the appropriate service documents from the manufacturer may obtain copies upon request to Boeing Commercial Airplanes, P.O. Box 3707, Seattle, Washington 98124. These documents may be examined at the FAA, Northwest Mountain Region, Transport Airplane Directorate, 17900 Pacific Highway South, Seattle, Washington, or Seattle Aircraft Certification Office, 9010 East Marginal Way South, Seattle, Washington.

Issued in Seattle, Washington, on April 19, 1990.

Darrell M. Pederson,

Acting Manager, Tranport Airplane Directorate, Aircraft Certification Service.

[FR Doc. 90–9945 Filed 4–27–90; 8:45 am]

BILLING CODE 4910–13–M

---

14 CFR Part 39

[Docket No. 90–ANE–04]

Airworthiness Directives; Teledyne Continental Motors (TCM), Aircraft Products Division (Formerly Bendix), TCM Ignition Systems S–20, S–1200, D–2000, and D–3000 Series Magnetos

AGENCY: Federal Aviation Administration (FAA), DOT.

ACTION: Notice of proposed rulemaking (NPRM).

SUMMARY: This document proposes to adopt an airworthiness directive (AD) applicable to TCM Ignition Systems S–20, S–1200, D–2000, and D–3000 series magnetos equipped with impulse couplings, which would supersede AD 78–09–07 R3. The proposed AD requires inspection and replacement, as necessary, of the impulse coupling. This AD is needed to detect, and remove from service, worn impulse coupling assemblies and to prevent failure of impulse coupling flyweights which have resulted in engine failures.

DATES: Comments must be received on or before May 29, 1990.

ADDRESSES: Comments on the proposal may be mailed in duplicate to: Federal Aviation Administration, New England Region, Office of the Assistant Chief Counsel, Attn: Rules Docket No. 90–ANE–04; 12 New England Executive Park, Burlington, Massachusetts 01803, or delivered in duplicate to Room 311 at the above address.

Comments must be marked: Docket No. 90–ANE–04.

Comments may be inspected at the above location in Room 311, between the hours of 8 a.m. and 4:30 p.m., Monday through Friday, except federal holidays.

The applicable SB No. 599C, dated September 1989, may be obtained from TCM Ignition Systems, 4200 Westpark Drive, SW., Atlanta, Georgia 30336, or may be examined in the Regional Rules Docket.

FOR FURTHER INFORMATION CONTACT: Gil Carter, Aerospace Engineer, Propulsion Branch, ACE–140A, Atlanta Aircraft Certification Office, Federal Aviation Administration, 1669 Phoenix Parkway, Suite 210C, Atlanta, Georgia 30349; telephone (404) 991–3810.

SUPPLEMENTARY INFORMATION: Interested persons are invited to participate in the making of the proposed rule by submitting such written data, views, or arguments as they may desire. Communications should identify the regulatory docket number and be submitted in duplicate to the address specified above. All communications received on or before the closing date for comments will be considered by the FAA before any final action is taken on the proposed rule. The proposal contained in this notice may be changed in light of comments received.

Comments are specifically invited on the overall regulatory, economic, environmental, and energy aspects of the proposed rule. All comments submitted will be available both before and after the closing date for comments, in the Regional Rules Docket, New England Region, Office of the Assistant Chief Counsel, Room 311, Burlington, Massachusetts 01803, for examination by interested persons. A report summarizing each FAA-public contact, concerned with the substance of the proposed AD, will be filed in the Rules Docket.

Commenters wishing the FAA to acknowledge receipt of their comments submitted in response to this notice must submit a self-addressed, stamped postcard on which the following statement is made: Comments to Docket No. 90–ANE–04. The postcard will be date/time stamped and returned to the commenter.

This proposed amendment will supersede AD 78–09–07 R3, Amendment 39–3205, as amended by Amendments 39–3252, 39–3963, and 39–4538, (48 FR 1482; January 13, 1983), which currently requires inspection and replacement, as necessary, of the impulse coupling components on certain TCM Ignition Systems magnetos. After issuing Amendment 39–3205, as amended, the FAA determined that clarification is needed for the inspection of the impulse couplings and that it is necessary to document the clearance dimension in the engine logbook. It has also been

determined that these impulse couplings have a limited life expectancy and should be replaced at each engine overhaul interval. Since this condition is likely to exist or develop in other magnetos of the same type design, an AD is being proposed to require the inspection of the magnetos at intervals not to exceed 500 hours time-in-service (TIS), documentation of the measured clearance in the engine logbook, replacement of worn impulse couplings, and mandatory replacement of certain impulse couplings at each engine overhaul on the affected TCM Ignition Systems magnetos.

The regulations proposed herein would not have substantial direct effects on the states, on the relationship between the national government and the states, or on the distribution of power and responsibilities among the various levels of government. Therefore, in accordance with Executive Order 12612, it is determined that this proposal would not have sufficient federalism implications to warrant the preparation of a Federalism Assessment.

The FAA has determined that this proposed regulation involves approximately 133,000 magnetos, and that it will cost approximately $50 per inspection, and $350 per impulse coupling replacement. Based on these figures, the total cost is estimated to be $43,550,000, which will be distributed over a 15-year time period. Therefore, I certify that this action (1) is not a "major rule" under Executive Order 12291; (2) is not a "significant rule" under DOT Regulatory Policies and Procedures (44 FR 11034; February 26, 1979); and (3) if promulgated, will not have a significant economic impact, positive or negative, on a substantial number of small entities under the criteria of the Regulatory Flexibility Act. A copy of the draft evaluation prepared for this action is contained in the regulatory docket. A copy of it may be obtained from the Regional Rules Docket.

List of Subjects in 14 CFR Part 39

Air transportation, Aircraft, Aviation safety, Safety.

The Proposed Amendment

Accordingly, pursuant to the authority delegated to me by the Administrator, the Federal Aviation Administration (FAA) proposes to amend 14 CFR Part 39 of the Federal Aviation Regulations (FAR) as follows:

PART 39—[AMENDED]

1. The authority citation for Part 39 continues to read as follows:

Authority: 49 U.S.C. 1354(a), 1421, and 1423; 49 U.S.C. 106(g) (Revised, Pub. L. 97–449, January 12, 1983); and 14 CFR 11.89.

§ 39.13 [Amended]

2. Section 39.13 is amended by adding the following new airworthiness directive (AD):

Teledyne Continental Motors (TCM), Aircraft Products Division (Formerly Bendix), TCM Ignition Systems: Applies to S–20, S–1200, D–2000, and D–3000 series magnetos equipped with impulse couplings.

Compliance required as indicated, unless already accomplished.

To prevent magneto failure and subsequent engine failure, accomplish the following:

(a) On magnetos with impulse couplings having less than 450 hours time-in-service (TIS) since new or overhaul on the effective date of this AD, accomplish the provisions of paragraphs (e) and (f) of this AD prior to accumulating 500 hours TIS. Thereafter, accomplish at intervals not to exceed 500 hours TIS since the last inspection.

(b) On magnetos with impluse couplings having 450 hours or more TIS since new or overhaul on the effective date of this AD, accomplish the provisions of paragraphs (e) and (f) within the next 50 hours TIS. Thereafter, accomplish at intervals not to exceed 500 hours TIS since the last inspection.

(c) For any magneto with impulse couplings with unknown TIS on the effective date of this AD, accomplish paragraphs (e) and (f) of this AD within the next 50 hours TIS. Thereafter, remove the impluse coupling assembly and replace with a new or overhauled coupling at the next engine overhaul or within the next 500 hours TIS, whichever occurs first. Thereafter accomplish provisions of paragraphs (e) and (f) intervals not to exceed 500 hours TIS.

(d) Remove the impluse coupling assembly and replace with a new or overhauled impulse coupling assembly at each engine overhaul after the effective date of this AD, if the impulse coupling has 1200 hours TIS or greater since new or overhaul. Thereafter, accomplish the provision of paragraphs (e) and (f) at intervals not to exceed 500 hours TIS between impluse coupling replacements.

(e) Insepct and replace, as required, the impulse coupling assembly in accorance with requirements of Teledyne Continental Motors Aircraft Products Service Bulletin No. 599C, dated September 1989.

(f) After accomplishing paragraph (e) of this AD, make a engine logbook entry showing the compliance time, the magneto make, model, and serial number, and the measured clearance between the stop pin and the flyweight.

(g) Aircraft may be ferried in accordance with the provisions of FAR 21.197 and 21.199 to a base where this AD can be accomplished.

(h) Upon submission of substantiating data by an owner or operator through an FAA Airworthiness Inspector, an alternate method of compliance with the requirements of this AD may be approved by the Manager, Atlanta Aircraft Certification Office, Aircraft Certification Service, Federal Aviation Administration, 1669 Phoenix Parkway, Suite 210C, Atlanta, Georgia 30349.

This amendment supersedes AD 78–09–07 R3, Amendment 39–3205, as amended by Amendments 39–3252, 39–3963, and 39–4538.

Issued in Burlington, Massachusetts, on April 20, 1990.

Arthur J. Pidgeon,

Assistant Manager, Engine and Propeller Directorate, Aircraft Certification Service.

[FR Doc. 90–9947 Filed 4–27–90; 8:45 am]

BILLING CODE 4910–13–M

DEPARTMENT OF HEALTH AND HUMAN SERVICES

Social Security Administration

20 CFR Part 416

[Reg. No. 16]

RIN 0960–AC52

Supplemental Security Income for the Aged, Blind, and Disabled; Death Benefits Spent on Last Illness and Burial

AGENCY: Social Security Administration, HHS.

ACTION: Proposed rule.

SUMMARY: The regulations are being amended to include the provisions of section 9120 of Public Law 100–203 (the Omnibus Budget Reconciliation Act of 1987) enacted December 22, 1987. Section 9120, which became effective April 1, 1988, amended section 1612(a)(2)(D) and (E) of the Social Security Act (the Act) to provide that payments to an individual (including gifts and inheritances) occasioned by the death of another person will not be considered income for Supplemental Security Income (SSI) purposes to the individual receiving them to the extent that they are used to pay for the deceased person's last illness and burial. In addition, the proposed rule provides that death benefits to be spent on a last illness and burial, if not yet spent by the first of the month following the month of receipt, will not be considered as resources of the individual receiving them for 1 calendar month after the month of receipt. The purpose of this change in the regulations is to allow a reasonable time for the death benefits to be used for payment of debts accruing from the deceased person's last illness and burial before those death benefits affect the SSI eligibility of the individual who received them.

DATES: Your comments will be considered if we receive them no later than June 29, 1990.

ADDRESSES: Comments should be submitted in writing to the Commissioner of Social Security, Department of Health and Human Services, P.O. Box 1585, Balitmore, MD 21235, or delivered to the Office of Regulations, Social Security Administration, 3-B-1 Operations Building, 6401 Security Boulevard, Baltimore, MD 21235, between 8:00 a.m. and 4:30 p.m. on regular business days. Comments received may be inspected during these same hours by making arrangements with the contact person shown below.

FOR FURTHER INFORMATION CONTACT: Duane Heaton, Legal Assistant, 3-B-1 Operations Building, 6401 Security Boulevard, Baltimore, MD 21235, (301) 965-8470.

SUPPLEMENTARY INFORMATION: Under the law prior to the enactment of Public Law 100-203 (the Omnibus Budget Reconciliation Act of 1987), when an individual received payments as a beneficiary of a life insurance policy, the payments were counted as income for SSI purposes except for any amount up to $1,500 that the individual spent for the insured's last illness and burial expenses. Illness and burial expenses include related hospital and medical expenses, funeral, burial plot and interment expenses, and other related costs.

Section 9120 of Public Law 100-203 removed the $1,500 limit on the amount of the proceeds of a life insurance policy that would not be treated as income if spent on the last illness and burial of the deceased and also removed from consideration as income for SSI purposes other payments occasioned by the death of a person, including gifts and inheritances, which are spent on the deceased person's last illness and burial. Sections 416.1121 (e) and (g) of the regulations are being revised to reflect these statutory changes. Section 9120, however, made no change regarding the treatment of these funds as resources for SSI purposes. Under current policy and regulations, death benefits retained until the month following the month of receipt are considered countable resources.

Recognizing that the recipient of death benefits who uses all or part of those benefits to pay the expenses of the deceased person's last illness and burial may not always be able to do so in the same month in which he or she receives them, proposed rule § 416.1201(a)(4) also would make a change in current policy regarding treatment of these funds as resources. In order to allow a reasonable time for payment of the expenses of the deceased person's last illness and burial before the death benefits affect the SSI eligibility of the recipient, the proposed rule provides that death benefits to be spent on outstanding debts resulting from the last illness and burial will not be considered resources of the individual receiving them for the calendar month after the month of receipt.

We believe that such a change in the resources rule is consistent with, and will help effectuate, the legislative intent underlying section 9120 of Public Law 100-203. That intent was to prevent a reduction or cessation of SSI benefits on account of receipt of death benefits not intended to assist the recipient in meeting needs of food, clothing, or shelter where these benefits are used to pay the expense of the deceased's illness and burial. The 1-month grace period will enable the recipient to use these benefits to meet burial expenses without suffering the loss of SSI benefits and thus will effectuate this intent. Our proposal to promulgate this change is based on the Secretary's general rulemaking authority conferred by sections 1102 and 1631(d)(1) of the Act.

Regulatory Procedures

Executive Order No. 12291

The Secretary has determined that this is not a major rule under Executive Order 12291, because the program and administrative costs will be insignificant and are estimated at less than $1 million a year. Therefore, a regulatory impact analysis is not required.

Regulatory Flexibility Act

We certify that these proposed regulations, if promulgated, will not have a significant impact on a substantial number of small entities because they affect only individuals. Therefore, a regulatory flexibility analysis as provided in Public Law 96-354, the Regulatory Flexibility Act, is not required.

Paperwork Reduction Act of 1980

These proposed regulations impose no reporting and recordkeeping requirements necessitating clearance by the Office of Management and Budget.

(Catalog of Federal Domestic Assistance Program No. 13-807, Supplemental Security Income Program)

List of Subjects in 20 CFR Part 416

Administrative practice and procedure, Aged, Blind, Disability benefits, Public assistance programs, Supplemental security income.

Dated: December 11, 1989.

Gwendolyn S. King,

Commissioner of Social Security.

Approved: March 5, 1990.

Louis W. Sullivan,

Secretary of Health and Human Services.

Part 416 of title 20 of the Code of Federal Regulations is amended as follows:

1. The authority citation for subpart K of part 416 continues to read as follows:

Authority: Secs. 1102, 1602, 1611, 1612, 1613, 1614(f), 1621, and 1631 of the Social Security Act; 42 U.S.C. 1302, 1381a, 1382, 1382a, 1382b, 1382c(f), 1382j, and 1383; sec. 211 of Pub. L. 93-66, 87 Stat. 154; sec. 2639 of Pub. L. 98-369, 98 Stat. 1144.

2. In § 416.1121, paragraphs (e) and (g) are revised to read as follows:

§ 416.1121 Types of unearned income.

* * * * *

(e) *Death benefits.* We count payments you get which were occasioned by the death of another person except for the amount of such payments that you spend on the deceased person's last illness and burial expenses. Last illness and burial expenses include related hospital and medical expenses, funeral, burial plot, and interment expenses, and other related costs.

Example: If you receive $2,000 from your uncle's life insurance policy and you spend $900 on his last illness and burial expenses, the balance, $1,100, is unearned income. If you spend the entire $2,000 for the last illness and burial, there is no unearned income.

* * * * *

(g) *Gifts and inheritances.* A gift is something you receive which is not repayment to you for goods or services you provided and which is not given to you because of a legal obligation on the giver's part. An inheritance is something that comes to you as a result of someone's death. It can be in cash or in kind, including any right in real or personal property. Gifts and inheritances occasioned by the death of another person, to the extent that they are used to pay the expenses of the deceased's last illness and burial, as defined in paragraph (e) of this section, are not considered income.

* * * * *

3. The authority citation for subpart L of part 416 continues to read as follows:

Authority: Secs. 1102, 1602, 1611, 1612, 1613, 1614(f), 1621, and 1631 of the Social Security Act; 42 U.S.C. 1302, 1381a, 1382, 1382a, 1382b, 1382c(f), 1382j, and 1383; sec. 211 of Pub. L. 93-66, 87 Stat. 154.

4. In § 416.1201(a), paragraph (a)(4) is added to read as follows:

§ 416.1201 Resources; general.

(a) *Resources; defined.* * * *

(4) Death benefits, including gifts and inheritances, received by an individual, to the extent that they are not income in accordance with paragraphs (e) and (g) of § 416.1121 because they are to be spent on costs resulting from the last illness and burial of the deceased, are not resources for the calendar month following the month of receipt. However, such death benefits retained until the first moment of the second calendar month following their receipt are resources at that time.

* * * * *

[FR Doc. 90-9975 Filed 4-27-90; 8:45 am]

BILLING CODE 4190-11-M

DEPARTMENT OF TRANSPORTATION

Office of the Secretary

33 CFR Part 52

[OST Docket No. 46911; Notice 90-18]

RIN-2105-AB59

Coast Guard Board for Correction of Military Records; Procedural Regulations

AGENCY: Office of the Secretary, DOT.

ACTION: Notice of proposed rulemaking.

SUMMARY: The Department proposes to amend its regulations concerning the Board for Correction of Military Records of the Coast Guard in accordance with section 212 of the Coast Guard Authorization Act of 1989. The proposed amendments would also make changes that streamline the Board's procedures.

DATES: Comments must be submitted on or before May 30, 1990.

ADDRESSES: Comments should be mailed in duplicate to Docket 46911, Documentary Services Division, C-55, Department of Transportation, Room 4107, 400 Seventh Street SW., Washington, DC 20590. In order to facilitate the Department's review, we request that six additional copies of the comments be submitted and that commenters include a reference to the docket number of this notice. Comments will be available for review by the public at this address from 9 a.m. through 5 p.m., Monday through Friday. Persons wishing acknowledgment of their comments' receipt should include a stamped, self-addressed postcard. The Documentary Services Division will time and date-stamp the card and return it to the commenter.

FOR FURTHER INFORMATION CONTACT: Robert H. Joost, Chairman, Board for Correction of Military Records of the Coast Guard, Office of the General Counsel, U.S. Department of Transportation, 400 Seventh Street SW., Washington, DC 20590, (202) 366-9335.

SUPPLEMENTARY INFORMATION:

The Board Process

The Secretary of Transportation, acting through the Department of Transportation Board for Correction of Military Records of the Coast Guard, is authorized to correct the military records of serving and separated Coast Guard uniformed personnel when it is necessary to correct an error or injustice.

The Board receives requests for: (1) The revision or removal of performance evaluations of officers and actions taken or likely to be taken as a consequence of the evaluations; (2) the assignment of disability ratings or increases in such ratings; (3) changes in the reason for discharge or upgrading of the character of a discharge; (4) changes in reenlistment codes; (5) Selective Reenlistment Bonuses; (6) changes that qualify an individual for special compensation such as sea pay; and (7) miscellaneous changes.

When an application is received by the Board, the Chairman first reviews it to see if it meets certain basic requirements. The Chairman determines, for example, whether it concerns an individual who is serving in the Coast Guard or who has served in the Coast Guard in the past; whether the request can be corrected by routine Coast Guard action or an administrative remedy that has not been exhausted; and whether the person has alleged a specific error or injustice and submitted proof of those allegations.

If the application does not meet one or more of these conditions, the Chairman returns the application to the individual and advises the person that the application can be filed again when these conditions are met.

If the application meets the conditions set forth above, the application is docketed. The individual's military record is then ordered. If the applicant is separated or retired from the Coast Guard, it may take two or more months to obtain the record from a Federal Records Center. The Board also obtains an applicant's medical record from the Department of Veterans Affairs (DVA), if the applicant has raised a medical or disability issue.

The Chairman sends a copy of each docketed application to the Chief Counsel of the Coast Guard. The Coast Guard is invited to submit its views in response to the allegations of the applicant. The Coast Guard may provide this response after it has obtained the applicant's record and any DVA medical records obtained by the Board on the applicant. The Coast Guard submits advisory opinions in approximately three-quarters of the cases before the Board.

Coast Guard views give the Board and the applicant valuable background information. Many applicants to the Board are not represented by counsel and fail to focus the issues in their applications. The Coast Guard, in its advisory opinion, articulates, often for the first time in the case, what the issues are. Moreover, the advisory opinion often gives factual and background information, in a neutral fashion, that provides a context for the allegation of error and/or injustice.

The Board may not, in many cases, be able to correct error and injustice unless it obtains this information. The Coast Guard is not required by Congress to answer a correction application. Thus, the probable consequence of imposing a time limitation on the Coast Guard, more onerous than the 120-day limit now in effect for the submission of advisory opinions, would be that the Board would receive fewer advisory opinions from the Coast Guard.

The applicant has the right to submit a response to the views of the Coast Guard. This provides an opportunity for an applicant to dispute the views of the Coast Guard and strengthen his or her case, if necessary, by submitting additional arguments or material in support of the application. The applicant also has the opportunity to agree with facts or opinions articulated by the Coast Guard, further narrowing the issues in the case and, sometimes, furnishing a clearer basis for affording relief.

In an oral hearing has been requested by an applicant, the Chairman rules on such request after all of the written information is submitted. If such a request is denied, an applicant presently has 45 days to request the Board to reconsider the Chairman's denial. During that 45-day period, the case cannot be adjudicated.

After a hearing, or, if no hearing is held, after all written information has been submitted, a proposed recommended decision is prepared. The decision is prepared on the basis of the application form and proof submitted by the applicant in support of the allegation of error or injustice; the applicant's military record; any relevant medical records from the DVA; the Coast Guard's views; the applicant's rebuttal to the Coast Guard's views; and, if a

hearing has been held, the report of that proceeding.

Each proposed recommended decision then goes to a three-member Board where changes are often made in reasoning, result, and writing style. The Board members sign the decision once they have approved it. Approximately 96% of the Board's decisions are final when they are signed by the Board members. The other 5% of the decisions must be reviewed and approved by the delegate of the Secretary before they become final decisions.

Statutory Requirements

Currently, there are no limits on the length of time that the Board can take to conduct all the steps in this process for the correction of a Coast Guard military record. Section 212 of the Coast Guard Authorization Act of 1989 (Public Law 101-225), signed by the President on December 13, 1989, directed the Secretary to amend the Board's regulations within 6 months of the date of enactment of the law "to ensure that a complete application is processed expeditiously and that final action on the application is taken within 10 months of its receipt."

The most important part of the proposal discussed below is the Secretary's response to the Congressional directive that the Board's regulations be amended to "ensure" that final action is taken on a "complete application" within ten months of its receipt by the Board.

The Board shares the concern of Congress that applications for correction be processed expeditiously. The Board already has made marked progress in shortening the amount of time it takes for a final decision to be issued on a pending application.

The Board has increased its disposition rate substantially. In Fiscal Year 88, the Board opened 404 cases and closed 328, for a net increase of 76 cases. In Fiscal Year 89, the Board opened 362 cases and closed 476, for a net decrease of 114 cases.

The Proposal

This NPRM would implement section 212 of the Coast Guard Authorization Act of 1989 (Public Law 101-225), by including in the rules a requirement that the Secretary "ensure" that final action is taken on a "complete application" within ten months of receipt by the Board. The NPRM proposes a definition for the term "complete application" which would "ensure" that final action is taken with that amount of time.

The Secretary proposes revisions and clarifications to the rules regarding the time limit for filing applications.

The Secretary also proposes some additional changes to the Board's regulations to speed the processing of applications, to clarify the application of certain existing rules which are set forth in subparts dealing with hearings but which apply to all cases, and to eliminate references to a nonexistent position.

The Secretary also proposes that all of the sections of 33 CFR Part 52 be renumbered when the final rule is published.

Section by Section Analysis

Section 52.01-5, Authority, would be amended to add the new requirement, imposed by Congress in section 212 of the Coast Guard Authorization Act of 1989, that the Board must process a complete application to final action within 10 months of its receipt. The amendment restates the language in the Coast Guard Authorization Act of 1989.

The revision to paragraph (c) of § 52.05-1, Establishment and composition, would delete the reference to the Executive Secretary of the Board and would replace it with a reference to the Deputy Chairman.

The addition to § 52.05-10, Jurisdiction, would define the requirements for a complete application.

The NPRM would define a complete application as one in which the following have been received by the Board or have occurred: (1) A signed application form that provides all necessary responses and is accompanied by proof in support of the allegation of error or injustice; (2) the applicant's military record; (3) any relevant DVA medical records concerning the applicant; (4) any written views from the Coast Guard submitted to the Board pursuant to § 52.45-5(c); (5) the applicant's rebuttals submitted to the Board pursuant to section 52.45-5(d); and (6) any hearing, if a hearing is conducted pursuant to subpart 52.20.

The proposed definition would give the Board flexibility while at the same time imposing a deadline for the completion of a case. This definition includes the views of the Coast Guard as part of a "complete application" because the Coast Guard, in its statement of views, articulates the facts and issues in a case. It gives factual and background information, in a neutral fashion, that provides a context for consideration of the allegation of error and/or injustice. It may be impossible for the Board, without a Coast Guard statement of views, to define the issues raised by some applications.

The word "application" is defined in Webster's New Collegiate Dictionary (1979 ed.) as a "request" or "petition." The word "complete" is defined in the same dictionary as "having all necessary parts, elements, or steps." Reading those terms together, an application would not be complete until the Coast Guard has told the applicant its position and the applicant has had an opportunity to respond to the views of the Coast Guard. It would be at that point that an application would be considered complete, and computation would commence.

It is arguable that the term "complete application" should include only material generated or provided by the applicant. The Secretary would like comment on an alternative to the proposed definition which would limit the term "complete application" to the applicant's DD Form 149 and attachments, the applicant's military record, any applicable DVA medical record, and the applicant's rebuttal. The Board would solicit Coast Guard views, but would consider the time used by the Coast Guard to prepare and submit them as part of the ten-month deadline for final action. Under current practice, the applicant has 60 days to submit a response to Coast Guard views and to submit further proof that an error or injustice was committed. This 60-day response would still be available to the applicant, under the alternative definition, if the Coast Guard recommends that the Board deny relief. It would be considered to be part of a "complete application" because it is important for applicants and is within their exclusive control. If applicants fail to make a rebuttal/additional proof submission, they will usually have difficulty in persuading the Board to grant relief. If the Coast Guard recommends that the Board grant relief in a case, no additional time would be provided to an applicant because no rebuttal would be necessary.

In paragraph (a) of § 52.10-1, General requirements, the term Executive Secretary would be deleted and replaced with the term Chairman. The section would state that applications should be sent to the Chairman who, if necessary, will send explanatory material to the applicant.

Section 52.10-5, Time limit for filing application, would be deleted and replaced with a new section. The new section retains the three-year statute of limitations required by title 10, United States Code, section 1552. It states that the three years will begin to run starting with the time at which the applicant discovered or reasonably should have discovered the alleged error or injustice.

It also adds the statement that an untimely application would be denied if

the applicant has presented insufficient evidence to warrant a finding that it is in the interest of justice to excuse an untimely filing. The regulations (32 CFR part 865 subpart A) of the Air Force Board for Correction of Military Records have a similar provision. The change will also explicitly state what in fact has been a practice of the Board, to determine when an applicant reasonably should have discovered an alleged error or injustice rather than relying solely on the applicant's statement of when he discovered the alleged error or injustice.

Section 52.20–1, Entitlement to hearing, refers to the procedure followed when an applicant requests a hearing. Under the current rules, the Chairman grants a hearing whenever he determines that "a hearing would be likely to produce additional information material to the case." Section 52.20–5, Denial of hearing, discusses the current procedure followed when an applicant requests reconsideration of the Chairman's denial of a hearing within 45 days of notice of the hearing denial. The Board's current rules on hearings create a 45-day delay in cases where the hearing request has been denied by the Chairman. The Board cannot issue a decision until after the time has passed. The new section 52.20–1, General provision, would be a more straightforward procedure than the current one. This change would result in a saving of time since the applicant under the current board rules can request reconsideration of the hearing denial during a 45-day period after he or she receives notice of the hearing denial. This 45-day delay would be eliminated.

Section 52.20–10, Notice of hearing, would be amended by deleting the phrase that refers to the requirement that the Board reconsider the Chairman's denial of an applicant's request for a hearing. This change would make this section consistent with § 52.20–10, as it would be revised by this rule.

Section 52.20–15, Postponement of hearing, would be deleted. The other military correction Boards in their regulations do not specifically authorize the postponement of a hearing based on new issues raised by the applicant or the military service. (32 CFR 581.3 (Army); 32 CFR part 723 (Navy); and 32 CFR part 865 Subpart A (Air Force)).

Section 52.25–1, Counsel, would be redesignated as § 52.10–10, Counsel, to place it in the subpart that pertains to all applications rather than just to those applications where a hearing was held. This definition of "counsel" remains the same. The title Administrator of Veterans Affairs is changed to the Secretary of Veterans Affairs because the Veterans Administration is now an Executive Department. The section would also be amended to state that the term "applicant" in the regulation means an applicant or his or her counsel, except that the applicant, rather than counsel, must personally sign the application form unless the applicant is incapacitated, his or her whereabouts are unknown, or he or she is deceased.

Section 52.30–10, Procurement of evidence, pertains to the applicant's responsibility to obtain such evidence as he or she wishes to present in support of the application. This section would be redesignated as § 52.10–15, Evidence, so that it would appear under subpart 52.10 Application for Correction, which pertains to all applications for correction.

Section 52.30–15, Access to official records, pertains to an applicant's access to his or her official records and any other information in the custody of the Coast Guard. This section would be redesignated as § 52.10–15, Access to official records, so that it would appear under subpart 52.10, Application for correction, which pertains to all applications for correction, instead of a subpart that pertains only to applications where a hearing takes place.

Section 52.30–25, Withdrawal, concerns an applicant's withdrawal of his or her application to the Board prior to a final determination. This section would be redesignated as § 52.30–25, Withdrawal, so that it would appear in subpart 52.10, Application for Correction, which concerns all applications for correction rather than in a subpart which pertains only to applications where a hearing is held.

Section 52.35–1, Deliberations and decision, would be amended by adding a sentence previously found in § 52.30–30, Reporting, regarding deliberations of the Board and the fact that they are conducted in executive session and are not reported. This sentence was previously in a subpart that discussed procedure at hearings. The statement, however, applies to hearing and non-hearing cases.

Section 52.35–15, Final action, restates the requirement that final action on a complete application must be taken within 10 months of its receipt.

Section 52.40–15, Report of Settlement, would be amended by deleting the references to the term Executive Secretary, a position which no longer exists, and replacing it with the term Chairman.

Executive Order 12291, Regulatory Flexibility Act, and Paperwork Reduction Act of 1980. This action has been reviewed under Executive Order 12291, and it has been determined that this is not a major rule. It will not result in an annual effect on the economy of $100 million or more. There will be no increase in production costs or prices for consumers, individual industries, Federal, State or local governments, agencies, or geographic regions. Furthermore, this rule will not adversely affect competition, employment, investment, productivity, innovation, or the ability of United States-based enterprises to compete with foreign-based enterprises in domestic or export markets. Accordingly, a regulatory impact analysis is not required.

This proposed regulation is not significant under the Department's Regulatory Policies and Procedures, dated February 26, 1979, because it involves a subject of interest to a limited number of individuals and merely changes procedures without reducing the substantive rights of these individuals. The number of affected individuals does not change. A full regulatory evaluation has not been prepared since the overall economic impact of the proposal is expected to be minimal.

I certify that this proposal would not have a significant economic impact on a substantial number of small entities. It would have no impact on the environment. It would not impose any reporting or paperwork requirements under the Paperwork Reduction Act.

Federalism

This action has been reviewed under Executive Order 12612 on Federalism and the Department has determined that this action would not have implications for principles of federalism that warrant the preparation of a Federalism Assessment. This rule would not limit the policymaking and administrative discretion of the States, nor would it affect the States' abilities to discharge traditional State governmental functions or otherwise affect any aspect of State sovereignty.

List of Subjects in 33 CFR Part 52

Administrative practice and procedure, Archives and records, Military personnel.

The Office of the Secretary of the U.S. Department of Transportation proposes to amend 33 CFR part 52 as follows:

1. The authority citation would be revised to read as follows:

Authority: 10 U.S.C. 1552; 49 U.S.C. 1655(b); Public Law 101–225.

2. Paragraph (a) of § 52.01–5 would be revised to read as follows:

§ 52.01-5 Authority.

(a) Section 131 of the Legislative Reorganization Act of 1946 (2 U.S.C. 190g) provides that no private bill or resolution, and no amendment to any bill or resolution, authorizing or directing the correction of military or naval records, shall be received or considered in either the Senate or the House of Representatives. Section 207 of the same Act, as amended, and as reenacted and codified in 10 U.S.C. 1552, provides that the Secretary of the Treasury, under procedures established by him, and acting through a board of civilians, may correct any military record of the Coast Guard when he considers it necessary to correct an error or remove an injustice. The functions, powers, and duties of the Secretary of the Treasury relating to the Coast Guard were transferred to and vested in the Secretary of Transportation (hereinafter, "the Secretary") by section 6(b) of the Department of Transportation Act (49 U.S.C. 1655(b)). Section 212 of the Coast Guard Authorization Act of 1989 provides that the Secretary shall "ensure" that final action on a "complete application for correction * * * is taken within 10 months of its receipt."

* * * * *

3. Section 52.05-1, Establishment and composition, would be amended by adding paragraph (c) to read as follows:

§ 52.05-1 Establishment and composition.

* * * * *

(c) The Deputy Chairman of the Board carries out the functions prescribed for him or her by these regulations and such other duties as may be assigned to him or her by the Chairman.

4. A new paragraph (c) would be added to § 52.05-10, Jurisdiction.

§ 52.05-10 Jurisdiction.

* * * * *

(c) No application shall be processed until it is complete. An application for relief is complete when all of the following have been received by the Board or have occured.

(1) A signed DD Form 149, which provides all necessary responses and which is accompanied by proof in support of the allegation of error or injustice;

(2) The military record of the applicant;

(3) Any relevant medical records of the applicant held by the Department of Veterans Affairs;

(4) Any written views of the Coast Guard on the application that have been forwarded to the Board pursuant to § 52.45-5(c);

(5) Any rebuttals by the applicant of the views of the Coast Guard that the applicant forwards to the Board pursuant to § 52.45-5(d); and

(6) Any hearing conducted pursuant to subpart 52.20, if a hearing is requested by the applicant.

5. Paragraph (a) of § 52.10-1, General requirements, would be revised to read as follows:

§ 52.10-1 General requirements.

(a) An application for correction of a Coast Guard record must be submitted on DD Form 149 (Application for Correction of Military or Naval Record) or an exact copy thereof, and should be addressed to: Chairman, Board for Correction of Military Records of the Coast Guard (C-60), United States Department of Transportation, Washington, DC 20509. Forms and explanatory matter may be obtained from the Chairman of the Board.

* * * * *

6. Section 52.10-5, Time limit for filing application, would be revised to read as follows:

§ 52.10-5 Time limit for filing application.

An application for correction of a record must be filed within three years after the applicant discovered or reasonably should have discovered the alleged error or injustice. If an application is untimely, the applicant should set forth reasons in the application why its acceptance would be in the interest of justice. An untimely application shall be denied unless the Board finds that sufficient evidence has been presented to warrant a finding that it would be in the interest of justice to excuse the failure to file timely.

7. Section 52.20-1 would be revised and section 52.20-5, Denial of hearing, would be removed as follows:

§ 52.20-1 General provision.

In each case in which the Chairman determines that a hearing is warranted, the applicant will be entitled to be heard orally either in person, by counsel, or in person with counsel.

8. Section 52.20-10, Notice of hearing, would be revised to read as follows:

§ 52.20-10 Notice of hearing.

(a) If the Chairman determines that a hearing is warranted, the applicant or his counsel is notified in writing that a hearing has been granted. Written notice stating the time and place of the hearing is given to the applicant or his or her counsel and the Coast Guard.

(b) The date of hearing may not be less than 30 days from the date of transmission of the written notice thereof, except that an earlier date may be set when the applicant waives his or her right to such 30 days' notice in writing and has actual notice of the time and place of the hearing.

§ 52.20-15 [Removed]

9. Section 52.20-15, Postponement of hearing, would be removed.

10. Section 52.25-1, Counsel, would be redesignated § 52.10-10, Counsel, and would be revised to read as follows:

§ 52.10-10 Counsel.

As used in this part, the term "counsel" includes members in good standing of any bar; accredited representatives of veterans' organizations recognized by the Secretary of Veterans Affairs under title 38, U.S. Code, sec. 3402; and other persons who, in the opinion of the Board, are competent to represent the applicant for correction. Whenever the term "applicant" is used in these rules, the term shall mean an applicant or his or her counsel, except in § 52.10-1, General requirements, i.e., the applicant himself or herself rather than counsel must sign the application form unless the applicant is incapacitated, his or her whereabouts are unknown, or he or she is deceased.

11. Section 52.30-10 would be redesignated § 52.10-15 and the heading would be revised to read "Evidence".

§ 52.30-15 [Redesignated as 52.10-20]

12. Section 52.30-15, Access to official records, would be redesignated § 52.10-20, Access to official records.

13. Section 52.30-25, Withdrawal, would be redesignated 52.10-25, Withdrawal.

14. Paragraph (a) of § 52.35-1, Deliberations and decision, would be revised to read as follows:

§ 52.35-1 Deliberations and decision.

(a) Only members of the Board and its staff may be present during the deliberations of the Board. The Board's deliberations are conducted in executive session and are not reported.

* * * * *

15. Section 52.35-15, Final action, would be amended by adding the following paragraph (c):

§ 52.35-15 Final action.

* * * * *

(c) *Date of Final action:* Final Action on an application for correction of a military record shall be taken within 10 months after it matures into a complete application, as described § 52.05-10(c).

16. Section 52.40-15, Report of settlement, would be revised to read as follows:

§ 52.40-15 Report of settlement.

When payment is made pursuant to the order of the Board, the Chairman of the Board shall be notified in writing of the name of the person to whom payment was made and of the itemized amount of the payment.

Issued at Washington, DC on April 24, 1990.

Samuel K. Skinner,

Secretary of Transportation.

[FR Doc. 90-9914 Filed 4-27-90; 8:45 am]

BILLING CODE 4910-62-M

ENVIRONMENTAL PROTECTION AGENCY

40 CFR PART 52

[FRL-3760-6]

Approval and Promulgation of Air Quality Implementation Plans; State of Texas; Control of Gasoline Volatility

AGENCY: Environmental Protection Agency (EPA).

ACTION: Proposed rule.

SUMMARY: EPA is proposing to approve a State Implementation Plan (SIP) revision that is applicable only in the Dallas/Fort Worth (D/FW) area, and includes rules which were submitted by the State of Texas. The rules will reduce emissions of volatile organic compounds (VOCs) from gasoline by reducing its Reid Vapor Pressure (RVP). EPA is also proposing to find that Texas' rules are "necessary to achieve" the National Ambient Air Quality Standard (NAAQS) for ozone, and are excepted from Federal preemption under section 211 (c)(4)(C) of the Clean Air Act (the Act). The intended effect of this action is to make reasonable further progress towards attainment of the ozone standard in the D/FW area as expeditiously as practicable, as required under the Act.

DATES: Comments must be received on or before May 30, 1990.

ADDRESSES: Comments should be sent to Mr. Thomas H. Diggs at the EPA address listed below.

Copies of the State's submittal and other relevant documents are available for public inspection during normal business hours at the following locations:

U.S. Environmental Protection Agency, Planning Section (6T-AP), 1445 Ross Avenue, Dallas, Texas 75202.

Texas Air Control Board, 6330 Highway 290 East, Austin, Texas, 78723.

FOR FURTHER INFORMATION CONTACT: Mike Zigmond or Becky Caldwell at (214) 655-7214 or FTS 255-7214.

SUPPLEMENTARY INFORMATION:

Background

The Texas Air Control Board (TACB) considered RVP control during the development of its Interim Post-82 SIP for the D/FW non-attainment area. This SIP was developed in 1987, and submitted on December 21, 1987. This Interim Post-82 SIP and the initial Post-82 SIP are described in greater detail in EPA's February 9, 1989, **Federal Register** (54 FR 6302). When the Interim SIP was submitted, EPA had proposed to control RVP, but had not issued a final rule. In the Interim SIP, Texas made a commitment to control RVP in the D/FW area, if EPA failed to take final action. In addition, the TACB based its demonstration of attainment on a 9.0 pounds per square inch (psi) RVP standard in the D/FW area. When EPA issued its final rule, the RVP standard in the D/FW area was set at essentially 9.5 psi. This compromised the demonstration of attainment, and provided the impetus for TACB to develop a 9.0 psi RVP rule.

The TACB began development of the RVP rules in mid-1989, and held four public hearings on the proposed rules in August 1989. On December 8, 1989, the Texas Air Control Board (TACB) adopted the final RVP rules by adding a new subchapter to TACB Regulation V, (31 TAC §§ 115.242-115.249). The rules require that no person shall place, store, or hold in any stationary tank, reservoir, or other container any gasoline with an RVP greater than 9.0 psi. The rules also require that no person shall transfer or allow the transfer of gasoline having an RVP greater than 9.0 psi to or from a bulk plant, terminal, or motor vehicle fuel dispensing facility. The rules only apply to affected facilities in the D/FW Consolidated Metropolitan Statistical Area (CMSA) (this includes Collin, Dallas, Denton, Ellis, Johnson, Kaufman, Parker, Rockwall, and Tarrant Counties). All motor vehicle fuel dispensing facilities in the affected counties must comply during the period of June 1 through September 16 of each year, and all other affected facilities must comply during the period of May 1 through September 16 of each year, beginning in 1990. The rules also prescribe test methods, recordkeeping requirements, and exemptions. On March 5, 1990, the Governor of Texas submitted a SIP revision, which includes a copy of the RVP rules, analysis of testimony regarding the rules, a public hearing certification, a complete record of the public hearings, and Board Order No. 89-13. In addition, on February 26, 1990, the Executive Director of the TACB submitted a copy of the RVP rules, analysis of testimony regarding the rules, and an exception request to regulate gasoline volatility (which includes lists of reasonable and not reasonable VOC control measures, and a discussion of its plans for enforcing the RVP rules).

EPA published a notice of proposed rulemaking on August 19, 1987, (52 FR 31274) which proposed to require the control of gasoline volatailty nationally. In that notice, EPA proposed that for the years 1989-1991, the standard in east Texas (where the D/FW CMSA is located) would be 10.5 psi from May 16 to May 31, and 9.1 psi from June 1 to September 15. In 1992 and subsequent years, the proposed standard was to be 9.0 psi from May 16 to May 31, and 7.8 psi from June 1 to September 15. On March 22, 1989, EPA published Phase 1 of the final RVP rulemaking (54 FR 11868). Under Phase 1, the RVP standards were revised from the original proposal. The RVP standard for east Texas is 10.5 psi from May 1 to May 31, and 9.5 psi from June 1 to September 15, beginning in 1989. Phase 2 of the RVP rulemaking has not yet been published. Under section 211(c)(4)(A) of the Act, EPA's RVP regulation normally preempts any state RVP regulation which is not identical to EPA's regulation. However, section 211 (c)(4)(C) of the Act provides for approval of state control of fuel or fuel additives if the control is part of the SIP and is necessary to achieve the primary or secondary NAAQS which the plan implements.

Criteria For Approval

Section211(c)(4)(A) of the Act, in describing Federal preemption authority, states:

> Except as otherwise provided in subparagraph (B) or (C), no State (or political subdivision thereof) may prescribe or attempt to enforce, for the purposes of motor vehicle emission control, any control or prohibition respecting use of a fuel or fuel additive in a motor vehicle or motor vehicle engine—(i) if the Administrator has found that no control or prohibition under paragraph (1) is necessary and has published his finding in the **Federal Register**, or (ii) if the Administrator has prescribed under paragraph (1) a control or prohibition applicable to such fuel or fuel additive, unless State prohibition or control is identical to the prohibition or control prescribed by the Administrator.

For the reasons described below, EPA does not believe this section of the Act preempts approval of the Texas revision. First, section 211(c)(4)(A)(i)

does not apply because EPA has not made a finding that RVP control is unnecessary. In fact, EPA has promulgated RVP controls, as described above. Second, EPA may still approve State RVP rules where EPA can make a finding under section 211(c)(4)(C) that the State control "is necessary to achieve" the standard that the SIP implements. Section 21((c)(4)(C) of the Act sets forth circumstances under which an exception to federal preemption of State regulation may occur:

> A State may prescribe and enforce, for purposes of motor vehicle emission control, a control or prohibition respecting the use of a fuel or fuel additive in a motor vehicle or motor vehicle engine if an applicable implementation plan for such State under Section 110 so provides. The Administrator may approve such provision in an implementation plan, or promulgate an implementation plan containing such a provision, only if he finds that the State control or prohibition is necessary to achieve the national primary or secondary ambient air quality standard which the plan implements.

In the August 10, 1988, Federal Register discussion of EPA's approval of a state oxygenated fuels program in the Maricopa County, Arizona SIP, EPA interpreted this language as allowing Agency approval of such a fuel control requirement only if the measure is essential to achieve timely attainment of the standard (53 FR 30228) [1]. EPA said further that a fuel control measure may be "necessary" for timely attainment if no other measures that would bring about timely attainment exist, or if such other measures exist and are technically possible to implement, but are unreasonable or impracticable. Otherwise, no fuel control would ever be "necessary", since for any area there is at least one measure—industry shutdowns or prohibitions on driving—that would result in timely attainment of the NAAQS. It is doubtful that Congress would have intended to bar EPA from approving State fuel controls into a SIP based on the availability of such drastic alternatives.

EPA also used this reasoning in approving five SIP revisions containing RVP regulations. Specifically, in 1989, EPA approved RVP SIP revisions for Connecticut, Massachusetts, New Jersey, New York and Rhode Island (see 54 FR pages 23650, 19173, 25572, 26030, and 23650 respectively) as "necessary to achieve" the NAAQS under section 211 (c)(4)(C). In today's proposal, the same criteria used by EPA to evaluate those SIP revisions are used to evaluate the D/FW SIP revision.

Evaluation of How the Texas Revision Satisfies the "Necessary" Criteria

Using the 1983 emission inventory, the TACB identified in the initial and interim Post-82 SIPs a number of VOC source categories, and estimated the amount of VOC emissions from each source category. The TACB then identified reasonable control measures which would contribute to attainment of the NAAQS for ozone in the D/FW area. In the Interim SIP, the TACB estimated that VOC emission reductions of 43.9% and 41.7% were needed in Dallas and Tarrant counties, respectively, to demonstrate attainment of the ozone NAAQS by December 31, 1991. The emission inventory used in the Post-82 Interim SIP was the 1983 base year emission inventory used for the initial Post-1982 SIP submitted in 1985 and 1986. This inventory was the most current inventory available for the Interim SIP submittal due to the time restraints in submitting the SIP revision by the end of 1987. EPA proposed in the February 9, 1989 notice to defer action on the overall control strategy in the Interim SIP revision since the emission reduction was based on the 1983 emission inventory. In addition, Texas has subsequently committed to develop a more current inventory, for the May 26, 1988 SIP call, which could substantially change the quantity of emissions, the control strategy, and the attainment demonstration for the D/FW area (54 FR 6303). EPA is evaluating the RVP rules in light of the current inventory as it is the best data EPA has available at this time. EPA took a similar approach in evaluating the New England RVP rules discussed above. Approval of the RVP rules using the 1983 inventory does not imply EPA approval of the inventory or the overall control strategy.

The control measures identified by TACB as reasonable (and therefore adopted), and their associated VOC emission reductions, are as follows:

[1] "Although the Ninth Circuit Court of Appeals vacated this SIP approval on other grounds, the court did not comment adversely on EPA's findings related to federal preemption. See *Delaney* v. *EPA*, 9th Cir. No. 88-7368, slip op., March 1, 1990."

VOC Reduction From 1983 Inventory (Percent)

Category	Dallas Co.	Tarrant Co.
Highway Vehicle RVP (Federal Control of Gasoline RVP to 9.5 psi)	6.0	3.5
Gasoline Station RVP (Federal Control to 9.5 psi)	<0.5	<0.6
Federal Motor Vehicle Controls and Highway Vehicle Growth	20.5	17.1
Vehicle Anti-Tampering Program (ATP)	5.7	5.3
Regulation 5 Controls as Applied in Harris County (Affects degreasing operations, perchloroethylene dry cleaners, surface coating, gasoline tank truck leak inspections, and vapor recovery at bulk gasoline terminals)	3.4	7.3
Vehicle Inspection and Maintenance Program (I/M)	2.2	2.7
Process Vents	1.8	1.4
Architectural Coatings	1.8	1.8
Cutback Asphalt	1.4	1.3
Regulation 5 Compliance Extensions	1.3	7.3
Transportation Controls	1.2	0.9
Auto Refinishing	0.5	0.5
Consumer Solvent Products	0.5	0.5
Graphic Arts	0.3	0.3
ATP (Collin and Denton counties)	0.3	<0.1
Gasoline Terminals	0.1	0.2
ATP (other CMSA counties)	<0.1	0.2
Aircraft Prime Coating	<0.1	0.1
Growth and Permits	−5.4	7.2
Net Total with Federal RVP Control to 9.5 psi (but without State RVP Control to 9.0 psi)	<42.1	<43.8
Reductions Needed to Demonstrate Attainment	43.9	41.7
Shortfall (Excess)	1.8	(2.1)

In the Texas submittal, the State considered the emission reduction potential of 30 control options, including those already adopted. These categories correspond to those listed by EPA, in its proposed Post-1987 ozone policy, which may give significant VOC emission reductions (52 FR 45104, Appendix C, November 24, 1987). In most of the relevant categories not already adopted the potential reductions are a very small portion of the 1983 inventory. The Texas exception request includes a table of the potential reductions from these categories, and the rationale for determining which measures were not reasonable. Rejection of control measures as not reasonable was based on one or more of the following criteria; high cost of control, delay of expeditious attainment, small VOC reduction, difficulty of enforcement, and public acceptance.

If all of the control measures listed on the table above (including a 9.5 psi RVP) were implemented, a VOC reduction shortfall of 1.8% would result in Dallas County; there would, however, be an excess of VOC reduction (2.1% of the 1983 inventory) for Tarrant County. It is clear that even with the adoption of all the reasonable control measures listed above, the 9.5 psi RVP required by the Federal rule is not sufficient to demonstrate attainment of the ozone standard in Dallas County. In addition, RVP controls appear to be necessary in Tarrant County also, in order to yield additional immediate results, ultimately bringing Tarrant County into attainment at an earlier date.

EPA would also like to note that several other counties in the CMSA have experienced exceedances of the ozone standard. EPA made a SIP call for Denton County in 1984, as a result of monitored ozone exceedances. Since then, monitored ozone exceedances have occurred in Parker, Rockwall, and Collin Counties. EPA made a Post-87 SIP call on May 26, 1988, for the D/FW CMSA, which will require all the counties in the CMSA to be addressed in the Post-87 ozone plan for the D/FW area. As part of the Post-87 SIP call, Texas is currently developing an updated VOC emissions inventory for the entire CMSA. In light of the fact that Texas does not currently have an approvable control strategy for Dallas and Tarrant Counties, nor does it have an attainment demonstration for the remaining CMSA counties, EPA cannot now conclude that the RVP program is not necessary to achieve the standard as expeditiously as practicable in those areas. Until EPA is in a position to conclude that the program is definitely not necessary, the Agency believes it is appropriate to make a finding under section 211(c)(4)(C) with respect to the RVP program in the CMSA. EPA believes that the RVP rules must be approved for the entire Dallas-Fort Worth CMSA in order to avoid significant supply, distribution and compliance problems. In addition, the RVP rules must be approved for all the CMSA counties because of the inter-county travel of vehicles throughout the CMSA. The effectiveness of the volatility controls in Dallas County would be significantly reduced and attainment would likely be delayed, if the large population of motorists who routinely commute into Dallas from the surrounding counties are allowed to re-fuel with higher volatility gasoline outside of Dallas and then drive into the city. EPA therefore proposes today to find that the state RVP regulation, as applicable to the entire Dallas-Fort Worth CMSA, is "necessary" under section 211(c)(4)(C) of the Act.

Proposed Action

EPA is proposing to approve a revision to the D/FW Post-82 Ozone SIP to control gasoline volatility in the entire CMSA. EPA is also proposing to make a finding that this SIP revision meets the requirements of section 211(c)(4)(C) of the Act for an exception to federal preemption. The control period of the Texas rules is May 1 through September 16 of each year, beginning in 1990. However, the state is preempted from enforcing the rules unless there is an effective final action by EPA approving the SIP revision.

EPA is providing a 30-day comment period on this notice of proposed rulemaking. Public comments received on or before (insert 30 days from date of publication) will be considered in EPA's final rulemaking. All comments will be available for inspection during normal business hours at the EPA office listed in the Addresses section of the notice.

Under 5 U.S.C. section 605(b), I certify that this proposed SIP approval will not have a significant economic impact on a substantial number of small entities. (See 46 FR 8709.)

The Office of Management and Budget has exempted this rule from the requirements of section 3 of Executive Order 12291.

List of Subjects in 40 CFR Part 52

Air pollution control, Hydrocarbons, Incorporation by reference, Ozone.

Authority: 42 U.S.C. 7401–7642.

Dated: March 26, 1990.

Joe D. Winkle,

Acting Regional Administrator.

[FR Doc. 90–9981 Filed 4–27–90; 8:45 am]

BILLING CODE 6560-50-M

FEDERAL COMMUNICATIONS COMMISSION

47 CFR Part 61

[CC Dockets No. 90–132; FCC 90–90]

Communications Common Carriers

AGENCY: Federal Communications Commission.

ACTION: Proposed rule.

SUMMARY: The Commission initiated this Notice of Proposed Rulemaking (NPRM) to examine the state of competition in the interstate long-distance marketplace and to adopt regulatory reform in light of the competition. The Commission tentatively concludes that interstate services as a whole are now subject to significant competition and that competition in the provision of business services is particularly vigorous. The Commission proposes a phased-in package of regulatory reforms for AT&T, beginning with certain business services, and extending later to 800 service, International Message Telephone Service (IMTS), and operator services. The Commission also proposes to permit interexchange carriers to offer certain business services to individual customers on a contract or private carriage basis. The Commission tentatively concludes that it would not consider changes to the regulations applicable to residential and small business services at this time.

DATES: Comments must be filed on or before June 12, 1990, and replies must be filed on or before July 12, 1990.

ADDRESSES: Federal Communications Commission, 1919 M Street NW., Washington, DC 20554.

FOR FURTHER INFORMATON CONTACT: Gary Phillips, Policy and Program Planning Division, Common Carrier Bureau, (202) 632–4047.

SUPPLEMENTARY INFORMATION: This is a summary of the Commission's Notice of Proposed Rulemaking (FCC 90–90), adopted March 8, 1990, and released April 13, 1990. The full text of this Commission decision is available for inspection and copying during normal business hours in the FCC Dockets Branch (Room 239), 1919 M Street, NW., Washington, DC. The complete text of this decision may also be purchased

from the Commission's copy contractors, International Transcription Service, (202) 857-3800, 2100 M Street NW., Suite 140, Washington, DC 20037.

Summary of Notice of Proposed Rulemaking

1. On March 8, 1990, the Commission adopted an NPRM in CC Docket No. 90-132 (released April 13, 1990, FCC 90-90) to examine the state of competition in the interstate long-distance marketplace and consider adopting regulatory reforms in light of this competition. The Commission tentatively concludes that interstate services as a whole are now subject to significant competition and that competition in the provision of business services is particularly vigorous. The Commission proposes a phased-in package of regulatory reforms for AT&T, beginning with certain business services, and extending later to 800 service, IMTS, and operator services. The Commission also proposes to permit interexchange carriers (IXCs) to offer certain business services to individual customers on a contract or private carriage basis. The Commission tentatively concludes that it would not consider changes to the regulations applicable to residential and small business services at this time.

2. The Commission notes that significant changes have occurred in the long-distance interstate marketplace in recent years. The divestiture by AT&T of the Bell Operating Companies (BOCs) eliminated AT&T's ability to discriminate against its long-distance competitors through control of local bottleneck interconnection facilities. The nearly ubiquitous implementation of equal access has enabled callers to presubscribe their telephones to carriers other than AT&T, and has also ensured that AT&T's competitors receive access service of equal quality to that provided AT&T. Some of AT&T's competitors have constructed modern, nationwide high capacity transmission networks that enable them efficiently to serve large numbers of customers and to compete vigorously in the marketplace. These changes, in turn, have permitted a significant increase in competition in the provision of long-distance services, as well as changes in the manner in which large business customers procure such services.

3. Because of these changes, the Commission has decided that it is time to undertake an in-depth reexamination of the state of competition in the interstate long-distance marketplace, and of the efficacy of current regulatory policies in light of this competition. The Commission proposes to evaluate the state of competition in the long-distance marketplace by analyzing a variety of factors. These factors include market share and changes therein; supply capabilities of participants in the marketplace; the financial strength of market participants; entry barriers; demand elasticities; and the relative size, power, and sophistication of various purchasers of interstate services.

4. The Commission tentatively concludes that there is significant competition in the interstate marketplace generally and that competitive forces are likely to increase over time. The Commission also tentatively concludes that for a number of reasons, competition is most intense in the provision of business services. Based on these tentative conclusions, the Commission proposes a phased-in package of regulatory reforms beginning with AT&T's business services. In particular, the Commission proposes to apply what it terms "maximum streamlined" regulation to AT&T services in the business services basket under price cap regulation and to certain AT&T services that are outside of price cap regulation. Under maximum streamlined regulation, AT&T would be permitted to file tariff on one-day's notice and without the cost data now required. In addition, the ceilings and upper and lower rate bands imposed under price cap regulation would no longer apply.

5. The Commission proposes to extend maximum streamlined regulation to 800 service as well, if and when 800 numbers become portable, *i.e.*, when 800 subscribers are able to use any carrier with a particular 800 number and change carriers without changing their 800 number. In addition, the Commission proposes to streamline its regulation of AT&T's IMTS service in the future and seeks comment on when this should occur, and specifically, on whether streamlining of IMTS might occur on January 1, 1993. The Commission also seeks comment on the competitiveness of operator services (other than 800 directory assistance service) and on when maximum streamlined regulation might be extended to these services as well.

6. The Commission tentatively concludes that it should not consider regulatory reform for AT&T's residential and small business services (domestic MTS and ReachOut America), at least until the Commission conducts its previously scheduled review of price cap regulation during 1992-1993. Therefore, the Commission proposes that, at least for the immediate future, these services remain subject to price cap regulation.

7. The second broad area of regulatory reform proposed by the Commission concerns single-customer offerings. The Commission notes that large business customers increasingly use bidding procedures to obtain their telecommunications services, awarding their business to the carrier that can offer them services and prices that best meet their individual needs. The Commission proposes regulatory reform to permit AT&T to compete on more equal terms with its competitors in this area.

8. The Commission proposes two alternative regulatory frameworks for single-customer offerings: (a) Permitting IXCs to offer certain common carrier services on a contract basis, or (b) permitting long distance carriers to offer a certain amount of service on a private carriage basis. Under the first proposal, AT&T would be permitted to contract with customers for the provision of certain services, provided that each such contract, together with a summary of pertinent contract provisions, was filed with the Commission within thirty days of the effective date of the contract. The Commission intends to make such contract summaries available to the public. Under the second proposal, the Commission would permit all long distance carriers to withdraw a portion of their facilities from common carrier service and offer a certain amount of service as a private carrier. Withdrawal of facilities by AT&T would be conditioned on Commission approval of a section 214 application.

9. As an alternative to the above-mentioned proposals, the Commission asks for comment on declaring AT&T nondominant under Competitive Carrier policies and subjecting it either to forbearance or to maximum streamlined regulation for all services.

10. Finally, the Commission proposes to modify certain of its rules governing AT&T's provision of customer premises equipment (CPE) and enhanced services. Specifically, the Commission proposes to modify certain of its nonstructural safeguards and comparatively efficient interconnection (CEI) requirements, as well as certain of its rules concerning the bundling of CPE and transmission services.

11. This is a non-restricted notice and comment rulemaking proceeding. See generally § 1.1206(a) of the Commission's rules, 47 CFR 1.1206(a), for rules governing permissible *ex parte* contacts.

12. Pursuant to section 605(a) of the Regulatory Flexibility Act, the

Commission certifies that the proposals made in the NPRM will not have a significant economic impact on a substantial number of small entities, and the Commission determined that the Regulatory Flexibility Act is not applicable in the proceeding.

Ordering Clauses

13. Accordingly, *it is ordered* That notice is hereby given of the proposed regulatory changes described above, and that comment is sought on these proposals.

14. *It is further ordered* That pursuant to applicable procedures set forth in §§ 1.415 and 1.419 of the Commission's Rules, 47 CFR 1.415 and 1.419, comments shall be filed with the Secretary, Federal Communications Commission, Washington, DC 20554 on or before June 12, 1990, and reply comments shall be filed with the Secretary on or before July 12, 1990. To file formally in this proceeding, participants must file an original and four copies of all comments, reply comments, and supporting comments. If participants want each Commissioner to receive a personal copy of their comments, an original plus nine copies must be filed. In addition, parties should file two copies of any such pleadings with the Policy and Program Planning Division, Common Carrier Bureau, room 544, 1919 M Street NW., Washington, DC. Parties should also file one copy of any documents filed in this docket with this Commission's copy contractor, International Transcription Services, Inc., Suite 140, 2100 M Street NW., Washington, DC. Comments and reply comments will be available for public inspection in the Docket Reference Room, room 239, 1919 M Street NW., Washington, DC 20554.

List of Subjects for 47 CFR Part 61

Communications, Common carriers.

Federal Communications Commission.

Donna R. Searcy,

Secretary.

[FR Doc. 90-9888 Filed 4-27-90; 8:45 am]

BILLING CODE 6712-01-M

---

47 CFR Part 73

[MM Docket No. 90-214, RM-7101, RM-7226]

Radio Broadcasting Services; Homerville, Lakeland and Statenville, Georgia

AGENCY: Federal Communications Commission.

ACTION: Proposed rule.

SUMMARY: This document requests comments on two separately filed petitions. The first petition, filed by Lakeland Broadcasters, Inc., permittee of Station WHFE(FM), Channel 290A at Lakeland, Georgia, proposes the substitution of Channel 290C3 for Channel 290A at Lakeland and modification of its construction permit (BPH-870910NV) to specify the higher class channel. The upgrade at Lakeland requires the substitution of Channel 254A for Channel 288A at Homerville, Georgia, and modification of Station WBTY(FM)'s license to specify operation on Channel 254A. The second petition, filed by LaTaurus Production Incorporated, requests the allotment of Channel 254A to Statenville, Georgia, as that community's first local service. In accordance with § 1.420(g) of the Commission's Rules, we shall not accept competing expressions of interest in the use of Channel 290C3 at Lakeland or require the proponent to demonstrate the availability of an additional equivalent channel for use by other interested parties. We are also issuing a *Show Cause Order* to Southern Broadcasting & Investment, license of Station WBTY(FM), Channel 288A, Homerville, Georgia. The coordinates for Channel 290C3 at Lakeland are North Latitude 31-02-25 and West Longitude 83-05-00. The coordinates for Channel 254A at Homerville are North Latitude 31-02-04 and West Longitude 82-51-50. The coordinates for Channel 254A at Statenville are North Latitude 30-47-05 and West Longitude 82-55-48.

DATES: Comments must be filed on or before June 15, 1990, and reply comments on or before July 2, 1990.

ADDRESSES: Federal Communications Commission, Washington, DC 20554. In addition to filing comments with the FCC, interested parties should serve the petitioners, or their counsel or consultant, as follows: Dennis P. Corbett, Laura B. Humphries, Leventhal, Senter & Lerman, 2000 K Street NW., Suite 600, Washington, DC 20006 (Attorneys for Lakeland Broadcasters, Inc.) and Warren Lee, President, LaTaurus Production Inc., 1103 West Magnolia Street, Valdosta, Georgia 31601 (Proponent for Statenville, Georgia).

FOR FURTHER INFORMATION CONTACT: Nancy J. Wall, Mass Media Bureau (202) 634-6530.

SUPPLEMENTARY INFORMATION: This is a synopsis of the Commission's Notice of Proposed Rule Making, MM Docket No. 90-214, adopted March 23, 1990, and released April 24, 1990. The full text of this Commission decision is available for inspection and copying during normal business hours in the FCC Dockets Branch (room 230), 1919 M Street NW., Washington, DC. The complete text of this decision may also be purchased from the Commission's copy contractors, International Transcription Service, (202) 857-3800, 2100 M Street NW., Suite 140, Washington, DC 20037.

Provisions of the Regulatory Flexibility Act of 1980 do not apply to this proceeding.

Members of the public should note that from the time a Notice of Proposed Rule Making is issued until the matter is no longer subject to Commission consideration or court review, all *ex parte* contacts are prohibited in Commission proceedings, such as this one, which involve channel allotments. See 47 CFR 1.1204(b) for rules governing permissible *ex parte* contact.

For information regarding proper filing procedures for comments, See 47 CFR 1.415 and 1.420.

List of Subjects in 47 CFR Part 73

Radio broadcasting.

Federal Communications Commission.

Karl A. Kensinger,

Chief, Allocations Branch, Policy and Rules Division, Mass Media Bureau.

[FR Doc. 90-9885 Filed 4-27-90; 8:45 am]

BILLING CODE 6712-01-M

INTERSTATE COMMERCE COMMISSION

[Ex Parte No. 385 (Sub-No. 3)]

49 CFR Part 1244

Expansion of the ICC Waybill Sample Public Use File

AGENCY: Interstate Commerce Commission.

ACTION: Extension of time for comments on notice of proposed rulemaking.

SUMMARY: Comments on the proposed expansion of the ICC Waybill Sample Public Use File were to be filed by April 2, 1990. (55 FR 3416, Feb. 1, 1990) The original due date was subsequently extended to April 30, 1990. Because of the need to coordinate the positions of its members and obtain supporting verified statements of carriers, the Association of American Railroads (AAR) has requested a second extension of time for filing comments.

DATES: The time for filing comments on the Notice of Proposed Rulemaking has been extended to May 18, 1990.

ADDRESSES: An original and 10 copies of any comments referring to Ex Parte No.

385 (Sub-No. 3) should be sent to: Office of the Secretary, Case Control Branch, Interstate Commerce Commission, Washington, DC 20423.

FOR FURTHER INFORMATION CONTACT: James A. Nash, tel: (202) 275-6864.

By the Commission, Louis Mackall, Acting Director, Office of Transportation Analysis.

Noreta R. McGee,

Secretary.

[FR Doc. 90-9960 Filed 4-27-90; 8:45 am]

BILLING CODE 7035-01-M

DEPARTMENT OF THE INTERIOR

Fish and Wildlife Service

50 CFR Part 17

RIN 1018-AB

Endangered and Threatened Wildlife and Plants; Extension of Comment Period on Proposed Endangered Status for White-necked Crow

AGENCY: Fish and Wildlife Service, Interior.

ACTION: Proposed rule; notice of extension of comment period.

SUMMARY: The Service gives notice that the comment period on the proposed rule to determine endangered status for the white-necked crow will be extended by 10 weeks.

DATES: Comments must be received by June 25, 1990. Public hearing requests must be received by June 11, 1990.

ADDRESSES: Comments and materials concerning this proposal should be sent to the Chief, Office of Scientific Authority; Mail Stop: Arlington Square, room 725; U.S. Fish and Wildlife Service; Washington, DC 20240. Comments and materials received will be available for public inspection, by appointment, from 8 a.m. to 4 p.m., Monday through Friday, in room 750, 4401 North Fairfax Drive, Arlington, Virginia.

FOR FURTHER INFORMATION CONTACT: Dr. Charles W. Dane, Chief, Office of Scientific Authority, at the above address (703-358-1708 or FTS 358-1708).

SUPPLEMENTARY INFORMATION:

Background

In the **Federal Register** of December 27, 1989 (54 FR 53132-53134), the Fish and Wildlife Service issued a proposed rule to determine endangered status for the white-necked crow (*Corvus leucognaphalus*), a bird found in the Dominican Republic and Haiti, and formerly in Puerto Rico and the Virgin Islands. The comment period on the proposal originally closed on February 26, 1990. In the **Federal Register** of March 12, 1990 (55 FR 9150), the comment period was extended to April 16, 1990. These deadlines did not allow sufficient time for the Service to solicit and receive comments from the involved foreign governments and certain other interested parties, by means of letters, cables, and a newspaper notice. The Service therefore is extending the comment period, and also the deadline for requesting a public hearing, until the dates shown above.

Authority: 16 U.S.C. 1361-1407; 16 U.S.C. 1531-1543; 16 U.S.C. 4201-4245; Pub. L. 99-625, 100 Stat. 3500; unless otherwise noted.

Dated: April 25, 1990.

John Buffington,

Regional Director-Region 8.

[FR Doc. 90-9977 Filed 4-27-90; 8:45 am]

BILLING CODE 4310-55-M

Notices

Federal Register
Vol. 55, No. 83
Monday, April 30, 1990

This section of the FEDERAL REGISTER contains documents other than rules or proposed rules that are applicable to the public. Notices of hearings and investigations, committee meetings, agency decisions and rulings, delegations of authority, filing of petitions and applications and agency statements of organization and functions are examples of documents appearing in this section.

DEPARTMENT OF AGRICULTURE

Office of the Secretary

Modification of Sugar Import Quota Amount

AGENCY: Office of the Secretary, USDA.

ACTION: Notice.

SUMMARY: This notice increases the quota for imports of sugars, syrups, and molasses described in Additional U.S. Note 3 to chapter 17 of the Harmonized Tariff Schedule of the United States (HTS), during the quota period January 1, 1989 through September 30, 1990, from 2,555,437 metric tons, raw value, to 2,815,527 metric tons, raw value. This increase of the sugar import quota is appropriate to give due consideration to the interests in the United States sugar market of domestic producers and materially affected contracting parties to the General Agreement on Tariffs and Trade (GATT).

EFFECTIVE DATE: April 27, 1990.

FOR FURTHER INFORMATION CONTACT: John Nuttall, Foreign Agricultural Service, Department of Agriculture, Washington, DC 20250, telephone: (202) 447-2916.

SUPPLEMENTARY INFORMATION: Presidential Proclamation No. 4941, issued May 5, 1982, amended Headnote 3 of subpart A, part 10, Schedule 1 of the Tariff Schedules of the United States (TSUS) in part to authorize the Secretary of Agriculture to establish the total amount of sugar that may be imported during any quota period and to amend the quota period for sugar imported into the United States. Effective January 1, 1989, Headnote 3 was repealed, and Additional U.S. Note 3 to chapter 17 of the Harmonized Tariff Schedule of the United States (HTS) was enacted in its place. Paragraph (d) of Additional U.S. Note 3 authorizes the Secretary of Agriculture to "amend any quantitative limitations (including the time period for which such limitations are applicable) which have previously been established * * *." On September 12, 1989, the Secretary of Agriculture established the current quota period of January 1, 1989 through September 30, 1990 (54 FR 38258), and on January 18, 1990, the Secretary of Agriculture established a quota level for such period of 2,555,437 metric tons, raw value. (55 FR 2255).

On June 22, 1989, the GATT Council adopted the report of the panel which examined U.S. restrictions on imports of sugar and which concluded that the quotas maintained under Additional U.S. Note 3 to chapter 17 are inconsistent with the General Agreement. The Council requested the United States to either terminate the restrictions or bring them into conformity with the General Agreement.

In the interim, since no clear alternative has yet been decided upon to respond to the panel findings, modification of the quota amount gives due consideration to the interests in the U.S. sugar market of domestic producers and materially affected contracting parties to the GATT.

Notice

Notice is hereby given that I have determined, in accordance with Additional U.S. Note 3 to chapter 17 of the HTS (Note 3), that the total amount of sugars, syrups, and molasses described in subheadings 1701.11, 1701.12, 1701.91.20, 1701.99, 1702.90.30, 1702.90.40, 1806.10.40, and 2106.90.10 of the HTS and the products of all foreign countries which may be entered or withdrawn from warehouse for consumption during the current sugar import quota period January 1, 1989 through September 30, 1990 is increased to 2,815,527 metric tons, raw value. Of the 2,815,527 metric tons, raw value, 1,815 metric tons, raw value, are reserved for specialty sugars from countries listed in paragraph (c)(ii) of Note 3; 2,576,000 metric tons, raw value are reserved as the total base quota amount for purposes of paragraph (c)(i) of Note 3; and 237,712 metric tons, raw value are reserved as a quota adjustment amount to be allocated by the United States Trade Representative.

I have also determined that this modification of the quota amount gives due consideration to the interests in the United States sugar market of domestic producers and materially affected contracting parties to the General Agreement on Tariffs and Trade.

Signed at Washington, DC on April 24, 1990.

Clayton Yeutter,
Secretary of Agriculture.

[FR Doc. 90-9941 Filed 4-27-90; 8:45 am]

BILLING CODE 3410-10-M

DEPARTMENT OF COMMERCE

International Trade Administration

AGENCY: Import Administration/International Trade Administration, Commerce.

ACTION: Notice of short-supply review and request for comments; certain manganese steel plate.

SUMMARY: The Secretary of Commerce ("Secretary") hereby announces a review and request for comments on a short-supply request for 348 net tons of various sizes of certain manganese steel palte under Article 8 of the Arrangement Between the European Coal and Steel Community and the European Economic Community, and the Government of the United States of America Concerning Trade in Certain Steel Products.

SHORT-SUPPLY REVIEW NUMBER: 16.

SUPPLEMENTARY INFORMATION: Pursuant to section 4(b)(3)(B) of the Steel Trade Liberalization Program Implementation Act, Pub. L. No. 101-221, 103 Stat. 1886 (1989) ("the Act"), and § 357.104(b) of the Department of Commerce's Short-Supply Regulations, published in the **Federal Register** on January 12, 1990, 55 FR 1348 ("Commerce's Short-Supply Regulations"), the Secretary hereby announces that a short-supply determination is under review with respect to certain manganese steel plate. On April 25, 1990, the Secretary received and adequate petition from U.S. Metalsource requesting a short-supply allowance for 348 net tons of this product under Article 8 of the Arrangement Between the European Coal and Steel Community and the European Economic Community, and the Government of the United States of America Concerning Trade in Certain Steel Products.

The requested material meets the following specifications:

Thickness: ¼ to ¾ inch.

Width: 60 inches to 96 inches.
Length: 144 inches to 240 inches.
Tolerances: as per ASTM–A6.
Chemistry: Mn, 11 to 14%; C. 1.15%; Si, <0.06%; P, <0.04%; S, <0.06%; Cr, <5%.
Hardness: BHN 200 in delivery condition (work hardens under impact to BHN 500–600).
Yield Strength: 50 KSI.
Tensile Strength: 125 KSI.
Elongation: 30%.

Section 4(b)(4)(B)(i) of the Act and § 357.106(b)(1) of Commerce's Short-Supply Regulations require the Secretary to make a determination with respect to a short-supply petition not later than the 15th day after the petition is filed if the Secretary finds that one of the following conditions exists: (1) The raw steelmaking capacity utilization in the United States equals or exceeds 90 percent; (2) the importation of additional quantities of the requested steel product was authorized by the Secretary during each of the two immediately preceding years; or (3) the requested steel product is not produced in the United States. The Secretary has granted short supply for this product during each of the two immediately preceding years. Therefore, in accordance with section 4(b)(B)(i)(II) of The Act and § 357.106(b)(1)(ii) of Commerce's Short-Supply Regulations, the Secretary is applying a rebuttable presumption that this product is presently in short supply. Unless domestic steel producers provide comments in response to this notice indicating that they can and will supply this product within the requested period of time, provided it represents a normal order-to-delivery period, the Secretary will issue a short-supply allowance not later than May 10, 1990.

Comments: Interested parties wishing to comment upon this review must send written comments not later than May 7, 1990, to the Secretary of Commerce, Attention: Import Administration, Room 7866, U.S. Department of Commerce, Pennsylvania Avenue and 14th Street NW., Washington, DC 20230. All documents submitted to the Secretary shall be accompanied by four copies. Interested parties shall certify that the factual information contained in any submission they make is accurate and complete to the best of their knowledge.

Any person who submits information in connection with a short-supply review may designate that information, or any part thereof, as proprietary, thereby requesting that the Secretary treat that information as proprietary. Information that the Secretary designates as proprietary will not be disclosed to any person (other than officers or employees of the United States Government who are directly concerned with the short-supply determination) without the consent of the submitter unless disclosure is ordered by a court of competent jurisidiction. Each submission of proprietary information shall be accompanied by a full public summary or approximated presentation of all proprietary information which will be placed in the public record. All comments concerning this review must reference the above-noted short-supply review number.

FOR FURTHER INFORMATION CONTACT: Richard O. Weible, Office of Agreements Compliance, Import Administration, U.S. Department of Commerce, room 7866, Pennsylvania Avenue and 14th Street, NW., Washington, DC 20230, (202) 377–0159.

Lisa B. Barry,
Acting Assistant Secretary for Import Administration.

[FR Doc. 90–10127 Filed 4–27–90; 8:45 am]
BILLING CODE 3510-DS-M

Minority Business Development Agency

Business Development Center Applications

AGENCY: Minority Business Development Agency, Commerce.

ACTION: Notice—cancellation of solicitation.

SUMMARY: The Minority Business Development Agency has determined to cancel solicitation for a competitive applications to operate a Minority Business Development Center in Little Rock, Arkansas. The announcement appeared on page 55 FR 15257 (FR DOC–90–9281) in the April 23, 1990 **Federal Register.**

SUPPLEMENTARY INFORMATION: For further information contact Yvonne Guevara, Dallas Regional Office, 1100 Commerce, suite 7B23, Dallas, Texas 75242–0790, (214) 767–8001.

11.800 Minority Business Development (Catalog of Federal Domestic Assistance).

Dated: April 23, 1990.

Melda Cabrera,
Regional Director, Dallas Regional Office, Regional Office.

[FR Doc. 90–9965 Filed 4–27–90; 8:45 am]
BILLING CODE 3510-21-M

National Oceanic and Atmospheric Administration

Marine Mammals; Proposed Permit Modification

Notice is hereby given that Dr. Randall S. Wells has requested a modification to Permit No. 655 issued on December 20, 1988 (53 FR 53050) under the authority of the Marine Mammal Protection Act of 1972 (16 U.S.C. 1361–1407) and the Regulations Governing the Taking and Importing of Marine Mammals (50 CFR part 216).

The Permit authorizes the capture, sampling, marking, tagging and release of up to 150 Atlantic bottlenose dolphins (Tursiops Truncatus) over a five (5) year period, and to recapture selected individuals as many as three times each year for follow-up testing. The Permit Holder is requesting authorization to attach satellite-monitored radio transmitters and VHF tags to the dorsal fins of three dolphins. These three dolphins would be included in the permitted take of 150 dolphins.

Concurrent with the publication of this notice in the **Federal Register**, the Secretary of Commerce is forwarding copies of this modification request to the Marine Mammal Commission and its Committee of Scientific Advisors.

Written data or views, or requests for a public hearing on this modification request should be submitted to the Assistant Administrator for Fisheries, c/o Office of Protected Resources, National Marine Fisheries Service, 1335 East West Highway, Room 7330, Silver Spring, Maryland 20910, within 30 days of the publication of this notice. Those individuals requesting a hearing should set forth the specific reasons why a hearing on this particular modification request would be appropriate. The holding of such a hearing is at the discretion of the Assistant Administrator for Fisheries.

All statements and opinions contained in this notice of modification request are summaries of those of the Applicant and do not necessarily reflect the views of the National Marine Fisheries Service.

Documents submitted in connection with the above modification request are available for review by appointment in the following offices:

Office of Protected Resources and Habitat Programs, National Marine Fisheries Service, 1335 East West Highway, room 7330, Silver Spring, Maryland 20910 (301/427–2289);

Director, Southeast Region, National Marine Fisheries Service, 9450 Koger Boulevard, St. Petersburg, Florida 33702 (813/893–3141 or FTS 826–3141);

Director, Southwest Region, National Marine Fisheries Service, 300 South Ferry Street, Terminal Island, California 90731 (813/893-3141 or FTS 826-3141); and
Director, Northeast Region, National Marine Fisheries Service, NOAA, One Blackburn Drive, Gloucester, Massachusetts 01930 (617/281-3600 or FTS 837-9200).

Dated: April 20 1990.

Nancy Foster,

Director, Office of Protected Resources and Habitat Programs, National Marine Fisheries Service.

[FR Doc. 90-9903 Filed 4-27-90; 8:45 am]

BILLING CODE 3510-22-M

DEPARTMENT OF DEFENSE

Public Information Collection Requirement Submitted to OMB for Review

ACTION: Notice.

The Department of Defense has submitted to OMB for clearance the following proposal for collection of information under the provisions of the Paperwork Reduction Act (44 U.S.C. chapter 35).

Title, applicable form, and applicable OMB control number: DoD Application for Press Building Pass; DD Form 398-3; and OMB Control Number 0704-0279.

Type of request: Revision.

Average burden hours/minutes per response: 30 Minutes.

Frequency of response: One response per respondent.

Number of respondents: 216.

Annual burden hours: 108.

Annual responses: 216.

Needs and uses: Members of the news media will be required to complete the "DoD Application for Press Building Pass" to obtain access to DoD-occupied buildings in the National Capital Region. This information will be collected when a member of the press applies for a building pass and used to initiate a National Agency Check (NAC). A pass will be issued after successful completion of the NAC. This information is necessary to ensure DoD personnel safety and the protection of classified or sensitive information.

Affected public: Individuals or households; Businesses or other for-profit.

Frequency: Continuing.

Respondents obligation: Voluntary.

OMB desk officer: Dr. J. Timothy Sprehe.

Written comments and recommendations on the proposed information collection should be sent to Dr. J. Timothy Sprehe at Office of Management and Budget, Desk Officer, room 3235, New Executive Office Building, Washington, DC 20503.

DOD Clearance Officer: Mrs. Pearl Rascoe-Harrison.

Written request for copies of the information collection proposal should be sent to Mrs. Rascoe-Harrison, WHS/DIOR, 1215 Jefferson Davis Highway, suite 1204, Arlington, Virginia 22202-4302.

Dated: April 24, 1990.

L.M. Bynum,

Alternate OSD Federal Register Liaison Officer, Department of Defense.

[FR Doc. 90-9907 Filed 4-27-90; 8:45 am]

BILLING CODE 3810-01-M

Office of the Secretary

Defense Science Board 1990 Summer Study Task Force on Strategic Forces/ C^3; Meeting

ACTION: Change in date and location of advisory committee meeting notice.

SUMMARY: The meeting of the Defense Science Board 1990 Summer Study Task Force on Strategic Forces/C^3 scheduled for 3 and 4 June, 1990, as published in the **Federal Register** (Vol. 55, No. 72, Page 13934, Friday, April 13, 1990, FR Doc. 90-8649) will be held on 5 and 6 June, 1990, at Science Applications International Corporation, McLean, Virginia.

Dated: April 24, 1990.

Linda M. Bynum,

Alternate OSD Federal Register, Liaison Officer, Department of Defense.

[FR Doc. 90-9908 Filed 4-27-90; 8:45 am]

BILLING CODE 3810-01-M

Defense Science Board Task Force on Technology and Technology Transfer Policy; Meeting

ACTION: Notice of advisory committee meetings.

SUMMARY: The Defense Science Board Task Force on Technology & Technology Transfer Policy will meet in closed session on 11 May 1990 at The Analytical Sciences Corp., 1101 Wilson Blvd., Arlington, VA.

The mission of the Defense Science Board is to advise the Secretary of Defense and the Under Secretary of Defense for Acquisition on scientific and technical matters as they affect the perceived needs of the Department of Defense. At this meeting the Task Force will receive classified briefings on DoD technology programs and activities and discuss intelligence estimates on various defense related technologies.

In accordance with section 10(d) of the Federal Advisory Committee Act, Public Law No. 92-463, as amended (5 U.S.C. app. II, (1982)), it has been determined that this DSB Task Froce meeting, concerns matters listed in 5 U.S.C. 552b(c)(1) (1982), and that accordingly this meeting will be closed to the public.

Dated: April 24, 1990.

Linda M. Bynum,

Alternate OSD Federal Register Liaison Officer, Department of Defense.

[FR Doc. 90-9909 Filed 4-27-90; 8:45 am]

BILLING CODE 3810-01-M

Corps of Engineers, Department of the Army

Meeting; Environmental Advisory Board

AGENCY: U.S. Army Corps of Engineers, DOD.

ACTION: Notice of open meeting.

SUMMARY: In accordance with section 10(a)(2) of the Federal Advisory Committee Act (Pub. L. 92-463), this notice sets forth the schedule and proposed agenda of the forthcoming meeting of the Chief of Engineers Environmental Advisory Board (EAB). The meeting is open to the public.

DATES: The meeting will be held from 8 a.m., Wednesday, May 16, 1990 to 11 a.m., Friday, May 18, 1990.

ADDRESSES: The meeting will be held at the U.S. Army Corps of Engineers Waterways Experiment Station, Vicksburg, Mississippi 39180-0631.

FOR FURTHER INFORMATION CONTACT: Dr. William L. Klesch, Chief, Office of Environmental Policy, Office of the Chief of Engineers, Washington, DC 20314-1000, (202) 272-0166.

SUPPLEMENTARY INFORMATION: The schedule and proposed agenda of the 48th Meeting of the EAB, "Ecosystems and Their Human Value," is:

May 16, 1990

0800-0820	Welcome	Col. Larry Fulton, Col. Frank Skidmore.
0820-0850	Chief's Charge to EAB	MG Patrick Kelly.

0850–0905	EAB Reply to Chief's Charge	Dr. L. Eugene Cronin.
0905–1015	Old and New Business	Dr. William Klesch.
1015–1030	Break	
1030–1155	Perspectives on Qualification of Ecosystem Functions and their Values.	Panel.
	U.S. Fish & Wildlife Service	Dr. Morgenweck.
	U.S. Environmental Protection Agency	Mr. Dave Davis.
	National Marine Fisheries Service	Dr. Nancy Foster.
	Missouri Department of Conservation	Mr. Dave Urich.
	Wildlife Management Institute	Dr. Jahn.
1155–1230	EAB Questions and Answers	Dr. Cronin/EAB.
1230–1330	Lunch	
1330–1420	An Economic Point of View in the Evaluation of Ecosystem Values	Panel.
	North Dakota State University	Dr. Jay Leitch.
	National Wildlife Federation	Mr. Campbell.
1420–1445	EAB Questions and Answers	Dr. Cronin/EAB.
1445–1500	Break	
1500–1630	State of the Art for Quantifying Ecosystem Functions and Values	Panel.
	Habitat Based Evaluation Procedures/Methodology	Mr. Farmer, USFWS.
	Wetland Evaluation Technique	Mr. Dan Smith, WES.
	Louisiana Wetlands Study—Contingent Value Method for Wetland Recreation.	Mr. John Titre, WES.
	Vusial Resource Assessment Procedure	Mr. Henderson, WES.
	Instream Flow Models	Dr. Nestler, WES.
1630–1170	EAB Questions and Answers	Dr. Cronin/EAB.
1700–1715	Public Comments	Dr. Cronin.

May 17, 1990

0800–0915	The Polanner's View of Quantification of Ecosystem Functions	Panel.
	Everglades Study	Dr. Moulding, CESAJ–PD–EE.
	Upper Mississippi Environmental	Mr. Bob Whiting, CENCS–ED–GH.
	Santa Ana River Project, California	Ms. Ruth Bajza, Villalobos CESPL–ED–HE.
	Wetlands Study, Lower Mississippi River	Mr. John Weber, CELMN–PD–R.
0915–0945	EAB Questions and Answers	Dr. Cronin/EAB.
0945–1000	Break	
1000–1145	Intangible "Human Values" and Conservation Biology	Panel.
	Biodiversity	Mr. Salwasser, USFS.
	Endangered Species	Mr. Wesley, USFWS.
	Aesthetics and Quality of Life	TBA.
	Nonconsumptive Uses of Wildlife	Mr. Shaw, Univ. Arizona, Tuscon.
1145–1215	EAB Questions and Answers	Dr. Cronin/EAB.
1215–1330	Lunch	
1330–1430	Future Directions—Sharpening the Tools of Resource Economics	Panel.
	Virginia Polytechnic University	Dr. Shabman.
	Department of the Interior	Dr. Goldstein.
	North Carolina State University	Dr. Kerry Smith.
1430–1500	EAB Questions and Anwers	Dr. Cronin/EAB.
1500–1530	Public Comments	

May 18, 1990

0800–0900	Report of EAB to the Chief of Engineers	Dr. Cronin.
0900–0930	Break	
0930–1030	Response on Behalf of the Chief of Engineers	Mr. Bates.
1030–1100	Public Comments	
1100	Meeting is Adjourned	Dr. Cronin.

John O. Roach, II

Army Liaison Officer with the Federal Register.

[FR Doc. 90–9991 Filed 4–27–90; 8:45 am]

BILLING CODE 3710–08–M

Department of the Navy

CNO Executive Panel; Closed Meeting

Pursuant to the provisions of the Federal Advisory Committee Act (5 U.S.C. App. 2), notice is hereby given that the Chief of Naval Operations (CNO) Executive Panel Technology Surprise Task Force will meet 15–16 May 1990 from 9 a.m. to 5 p.m. each day, at 4401 Ford Avenue, Alexandria, Virginia. All sessions will be closed to the public.

The purpose of this meeting is to discuss the possibility of unexpected technological breakthroughs that vastly change warfighting capabilities. The entire agenda of the meeting will consist of discussions of key issues regarding the potential for unexpected technology breakthroughs that could have an acute impact on naval and other military forces. These matters constitute classified information that is specifically authorized by Executive Order to be kept secret in the interest of national defense and is, in fact, properly classified pursuant to such Executive Order. Accordingly, the Secretary of the Navy has determined in writing that the public interest requires that all sessions of the meeting be closed to the public because they will be concerned with matters listed in section 552b(c)(1) of title 5, United States Code.

For further information concerning this meeting, contact: Lelia V. Carnevale, Secretary to the CNO Executive Panel Advisory Committee, 4401 Ford Avenue, Room 601, Alexandria, Virginia 22302–0268, Phone (703) 756–1205.

Dated: April 20, 1990.

Sandra M. Kay,

Department of the Navy, Alternate Federal Register Liaison Officer.

[FR Doc. 90-9864 Filed 4-27-90; 8:45 am]

BILLING CODE 3810-AE-M

Naval Research Advisory Committee; Closed Meeting

Pursuant to the provisions of the Federal Advisory Committee Act (5 U.S.C. App. 2), Notice is hereby given that the Naval Research Advisory Committee Panel on Determining the Impact of Advancing Technology on Exercise Reconstruction and Data Collection will meet on May 16-17, 1990. The meeting will be held at the Center for Naval Analyses, 4401 Ford Avenue, Alexandria, Virginia. The meeting will commence at 8 a.m. and terminate a 6 p.m. on May 16; and commence at 8 a.m. and terminate at 3:15 p.m. on May 17, 1990. All sessions of the meeting will be closed to the public.

The purpose of the meeting is to provide briefings for the panel members related to the impact of advancing technology on exercise reconstruction and data collection. The agenda will include briefings and discussions on Fleet requirements for data collection and analaysis and exercise reconstruction techniques and procedures. These briefings and discussions will contain classified information that is specifically authorized under criteria established by Executive order to be kept secret in the interest of national defense and is in fact properly classified pursuant to such Executive Order. The classified and non-classified matters to be discussed are to inextricably interwined as to preclude opening any portion of the meeting. Accordingly, the Secretary of the Navy has determined in writing that the public interest requires that all sessions of the meeting be closed to the public because they will be concerned with matters listed in section 552b(c)(1) of title 5, United States Code.

For further information concerning this meeting contact: Commander John Hrenko, U.S. Navy, Office of Naval Research, 800 North Quincy Street, Arlington, VA 22217-5000, telephone number: (202) 696-4488.

Dated: April 20, 1990

Sandra M. Kay,

Department of the Navy, Alternate Federal Register Liaison Officer.

[FR Doc. 90-9865 Filed 4-27-90; 8:45 am]

BILLING CODE 3810-AE-M

DEPARTMENT OF ENERGY

Solicitation for Financial Assistance; Idaho—Teachers Skill Enhancement Program

AGENCY: Idaho Operations Office, Department of Energy.

ACTION: Availability of solicitation for the Teacher's Skill Enhancement Program.

SUMMARY: DOE is issuing Solicitation DE-PS07-90ID12950 which solicits grants applications for the Teacher's Skill Enhancement Program. Eligibility is limited to teachers presently teaching grades kindergarten through twelve within the state of Idaho. This is a pilot program initiated in Idaho and if successful it is anticipated that it will be extended to other states in the Intermountain West area. This activity is part of the Department of Energy, Office of Environmental Restoration Waste Management's Science Education Outreach Program. A need has been recognized nationally that more emphasis should be placed on the application of math and sciences in the classroom. This emphasis is necessary to insure that the nation's workforce is prepared to handle all future technological challenges, particularly those in environmental restoration and waste management.

The objective of this program is to provide assistance to elementary teachers and secondary science and mathematics teachers so that they may acquire a better understanding of science and math application as practiced in industry. The intent is to enable teachers to become more cognizant of this subject matter by interfacing with INEL professionals. A week of this program will be devoted to topics dealing with waste management and environmental restoration. Teachers will be paired with an INEL scientist or engineer who will act as a mentor. The teacher and the mentor will develop a program that will match the teacher's needs for enhancement of his or her skills. Selected teachers will be required to attend the first three weeks of the program and may, if they so desire, continue for the subsequent three weeks. It is anticipated that the teachers will utilize this information in their classroom curriculum to make it more exciting and applicable to today's needs.

Authority: DOE Organization Act (Pub. L. 95-91 (42 U.S.C. 7107)); DOE Financial Assistance Regulation, 10 CFR part 600, subparts A and C.

Awards: DOE anticipates that approximately $45,000 will be available for this program which should provide support for about ten to fifteen awards.

FOR FURTHER INFORMATION CONTACT: Mr. James P. McGowan, U.S. Department of Energy, Idaho Operations Office, 785 DOE Place, Idaho Falls, ID 83402; Phone: (208) 526-8779.

Issued in Idaho Falls, Idaho on April 18, 1990.

J. Roger Gonzales,

Director, Contracts Management Division.

[FR Doc. 90-9970 Filed 4-27-90; 8:45 am]

BILLING CODE 6450-01-M

Idaho Operations Office

Solicitation for Financial Assistance; University Reactor Sharing Program

AGENCY: Department of Energy, Idaho Operations Office.

ACTION: Availability of solicitation for support of the university reactor sharing program.

SUMMARY: DOE has issued Solicitation DE-PS07-90ER12947 which solicits grant applications from reactor owning U.S. colleges and universities (host institutions) for the purpose of increasing the availability of their nuclear reactor facilities to non-reactor owning colleges and universities (user institutions). The grants provide funds against which reactor operating costs may be charged when the facilities are utilized by regionally affiliated user institutions for student instruction or for student or faculty research. The objectives of the program are to strengthen nuclear science and engineering instruction in the curricula of the non-reactor owning colleges and universities, as well as research opportunities and application of nuclear analytical techniques for faculty and students in the sciences. University reactors are extremely versatile neutron sources and research facilities; thus the availability of a nuclear reactor contributes particularly and significantly to educational and research opportunities at both the undergraduate and graduate levels.

Authority: DOE Organization Act (Pub. L. 95-91 (42 U.S.C. 7107)); DOE Financial Assistance Regulation, 10 CFR part 600, subparts A and C.

Awards: DOE anticipates awarding grants for each project subject to the availability of funds. DOE anticipates that approximately $500,000 will be available for support of these activities.

FOR FURTHER INFORMATION CONTACT: James P. McGowan, Contracts Management Division, U.S. Department

of Energy, Idaho Operations Office, 785 DOE Place, Idaho Falls, Idaho 83402.

Issued in Idaho Falls, Idaho on April 18, 1990.

J. Roger Gonzales,

Director, Contracts Management Division.

[FR Doc. 90-9971 Filed 4-27-90; 8:45 am]

BILLING CODE 6450-01-M

Federal Energy Regulatory Commission

[Docket Nos. ER90-319-000, et al.]

Wisconsin Power & Light Co., et al.; Electric Rate, Small Power Production, and Interlocking Directorate Filings

April 18, 1990.

Take notice that the following filings have been made with the Commission:

1. Wisconsin Power & Light Co.

[Docket Nos. ER90-319-000]

Take notice that on April 12, 1990, Wisconsin Power and Light Company tendered for filing with the Federal Energy Regulatory Commission three Letter Agreements between Wisconsin Power and Light Company (WP&L) and Wisconsin Public Power, Inc. System (WPPI).

The Agreements provide: (1) For WP&L to supply WPPI with various amounts of Firm Power during the period of June 1, 1990 through May 31, 1995; (2) for WP&L to make General Purpose Energy available to WPPI at times and in quantities as mutually agreed upon; and (3) for WP&L to make both Firm and Non-Firm Energy available to WPPI, in return for Energy Rights from a Combustion Turbine to be installed by WPPI.

WP&L requests expedited consideration of the filing and an effective date of May 1, 1990 so that the Parties may immediately begin achieving mutual economic benefit. Accordingly, WP&L requests waiver of the Commission's notice requirements, to the extent necessary, to allow the filing to be posed (in the case of the Combustion Turbine agreement) more than 120 days prior to the initial date of service.

Comment date: May 3, 1990, in accordance with Standard paragraph E at the end of this notice.

2. Richard R. Sonstelie

[Docket No. ID-2473-000]

Take notice that on April 11, 1990, Richard R. Sonstelie (Applicant) filed an application under section 305(b) of the Federal Power Act to hold the following positions:

President, Chief Financial Ofifcer, and Director, Puget Sound Power & Light Company

Director, First Intestate Bank of Washington, N.A.

Comment date: May 4, 1990, in accordance with Standard paragraph E at the end of this notice.

3. Pennsylvania Power & Light Co.

[Docket No. ER90-320-000

Take notice that on April 3, 1990, Pennsylvania Power & Light Company (PP&L) tendered for filing an executed agreement dated as of March 14, 1990, between PP&L and Orange and Rockland Utilities, Inc. (O&R), which supplements the System Power Purchase Agreement, dated November 24, 1982, between PP&L and O&R on file with the Commission as the Company's Rate Schedule FERC No. 77. The proposed rate schedule provides for the sale of short-term electric capacity and energy from PP&L's Martins Creek Units 3 and 4 to O&R.

The rate schedule provides for a maximum reservation charge of $808 per megawatt week and a delivery charge of PP&L's actual cost of producing the energy plus a maximum charge of $17/MWH reflecting foregone interchange savings.

PP&L requests waiver of the notice requirements of Section 205 of the Federal Power Act and § 35.3 of the Commission's Regulations so that the proposed rate schedule can be made effective as of May 1, 1990, in accordance with the planned commencement of service.

PP&L states that a copy of its filing was served on O&R, the Pennsylvania Public Utility Commission, and the New York Public Service Commission.

Comment date: May 3, 1990, in accordance with Standard paragraph E at the end of this notice.

4. Duke Power Co.

[Docket No. ER90-315-000]

Take notice that Duke Power Company (Duke) on April 6, 1990, tendered for filing a revision in its wheeling rate under the Agreement between Duke Power Company and the United States of America, Department of Energy, acting through the Southeastern Power Administration (SEPA), dated January 13, 1986 (designated Rate Schedule FERC No. 283), as supplemented, which revision provisions for a reduction in the wheeling rate from $1.33 per kilowatt month to $1.24 per kilowatt month for delivery by Duke of approximately 194,500 kilowatts from SEPA's Hartwell, Clarks Hill, and Richard B. Russell Projects to preference customers of SEPA in Duke's service area in North Carolina and South Carolina.

Duke has requested a waiver of the Commission's notice requirements so that the revised rate becomes effective on January 21, 1990.

Copies of this filing were served on SEPA, the North Carolina Utilities Commission, and the South Carolina Public Service Commission.

Comment date: May 3, 1990, in accordance with Standard paragraph E at the end of this notice.

5. New York State Electric & Gas Corp.

[Docket No. ER90-318-000]

Take notice that on April 9, 1990, New York State Electric & Gas Corporation (NYSEG) tendered for filing pursuant to § 35.13 of the regulations under the Federal Power Act, as a rate schedule, an agreement with New England Power Company (NEP). The short term agreement provides that NYSEG shall sell surplus capacity and associated energy to NEP and make available to NEP additional capacity and energy. This constitutes merely a continued service under Rate Schedule NYSEG FERC No. 102. Service under this agreement shall begin and terminate as follows: 50 megawatts, May 1, 1990 to August 31, 1990; subject to availability and notice an additional 50 megawatts, September 1, 1990 to October 31, 1990 and an additional 25 megawatts, May 1, 1990 to October 31, 1990. These durations may be extended in writing by both parties.

NYSEG has filed a copy of this filing with New England Power Company, with the Massachusetts Department of Public Utilities, and with the Public Service Commission of the State of New York.

NYSEG requests that the 60-day filing requirement be waived and that May 1, 1990 be allowed as the effective date of the filing.

Comment date: May 3, 1990, in accordance with Standard paragraph E at the end of this notice.

Standard Paragraphs:

E. Any person desiring to be heard or to protest said filing should file a motion to intervene or protest with the Federal Energy Regulatory Commission, 825 North Capitol Street, NE., Washington, DC 20426, in accordance with Rules 211 and 214 of the Commission's Rules of Practice and Procedure (18 CFR 385.211 and 385.214). All such motions or protests should be filed on or before the comment date. Protests will be considered by the Commission in determining the appropriate action to be

taken, but will not serve to make protestants parties to the proceeding. Any person wishing to become a party must file a motion to intervene. Copies of this filing are on file with the Commission and are available for public inspection.

Lois D. Cashell,

Secretary.

[FR Doc. 90-9892 Filed 4-27-90; 8:45 am]

BILLING CODE 6717-01-M

[Docket Nos. CP90-1200-000, et al.]

Texas Gas Transmission Co., et al.; Natural Gas Certificate Filings

April 23, 1990.

Take notice that the following filings have been made with the Commission:

1. Texas Gas Transmission Co.

[Docket No. CP90-1200-000]

Take notice that on April 17, 1990, Texas Gas Transmission Company (Texas Gas), 3800 Frederica Street, Owensboro, Kentucky 42301, filed in Docket No. CP90-1200-000 a request pursuant to §§ 157.205 and 284.225 of the Commission's Regulations under the Natural Gas Act (18 CFR) for authorization to transport gas for Continental Natural Gas, Inc., (Continental), under its blanket certificate issued in Docket No. CP88-686-000, pursuant to section 7 of the Natural Gas Act, all as more fully set forth with the Commission and open to public inspection.

Texas Gas states that it proposes to transport, on an interruptible basis, 50,000 MMBtu on a peak day, 20,000 MMBtu on an average day and 18,250,000 on an annual basis. Texas Gas also states that pursuant to a Transportation Agreement dated December 12, 1989 between Texas Gas and Continental (Transportation Agreement) proposes to transport natural gas for Continental from receipt points located in various counties in Louisiana, Indiana, Kentucky, Ohio, Texas, Tennessee, Arkansas. The points of delivery and ultimate points of devliveries are located in various counties in Louisiana.

Texas Gas further states that it commenced this service on March 16, 1990. as reported in Docket No. ST90-2274-000.

Comment date: June 7, 1990, in accordance with Standard Paragraph G at the end of this notice.

2. Great Lakes Gas Transmission Limited Partnership, Great Lakes Gas Transmission Co.

[Docket Nos. CP66-111-002, et al., CP90-1162-000, CP90-1163-000]

Take notice that on April 6, 1990, Great Lakes Gas Transmission Limited Partnership (Great Lakes LP) and Great Lakes Gas Transmission Company (Great Lakes) (collectively Applicants) both at 2100 Buhl Building, Detroit, Michigan, 48226, filed in Docket No. CP90-1162-000, pursuant to sections 7 (c) and (b) of the Natural Gas Act, (NGA) and part 157 of the Federal Energy Regulatory Commission's Regulations (Commission's), a joint application for a certificate of public convenience and necessity and for an order granting permission and approval to transfer facilities and services. By this application, Great Lakes LP requests a certificate of public convenience and necessity authorizing it to acquire and operate the facilities and to perform the services of Great Lakes, and to transport and sell natural gas for resale in interstate commerce in the same manner as conducted by Great Lakes. Great Lakes requests companion authority to transfer all of its jurisdictional facilities, operations, and services to Great Lakes LP. Great Lakes LP further requests that it be substituted for Great Lakes in all pending proceeding in which Great Lakes is a party.

Pursuant to section 3 of the Natural Gas Act, 15 U.S.C. 717c, the Secretary of Energy's Delegation Order No. 0204-112, and Part 153 of the Commission's Regulations, Applicants in Docket No. CP90-1163-000 request authorization permitting Great Lakes LP to succeed to all of Great Lakes' existing authorizations to import and export natural gas. Concurrently, Applicants are applying pursuant to section 3 of the NGA to the Office of Fossil Energy (FE) of the Department of Energy (DOE) for authority for Great Lakes LP to succeed to the existing authorizations to import and export natural gas of great Lakes. The authorization sought by this application does not seek any change in the terms and conditions of Great Lakes' existing import and export authority apart from the succession of Great Lakes LP as the holder of that authority.

In addition, pursuant to Executive Order No. 10485 and 18 CFR 153.10 and 153.12 of the Commission's Regulations, Applicants in Docket No. CP66-111-002, *et al.*, request authorization permitting Great Lakes LP to succeed to the Presidential Permit issued to Great Lakes in this docket on June 23, 1967, as amended October 1, 1976, and July 10, 1981. The authorization sought by this application does not seek any change in the terms and conditions of Great Lakes' existing Presidential Permit apart from the succession of Great Lakes LP as the holder of that authority, all as more fully set forth in the application which is on file with the Commission and open to public inspection.

Applicants request that these authorizations be made effective April 6, 1990, the first full day of operation after the formation of Great Lakes LP. Applicants state that the approval of these applications are required by the present and future public convenience and necessity because it will facilitate the financing of existing expansion of the Great Lakes system and provide substantial encouragement to obtain the capital investment required for major and future expansion of the Great Lakes system. Applicants assert that the proposed transfer will create substantial tax savings by minimizing the double taxation of dividends that is inherent with a corporation such as Great Lakes.

In addition, Applicants state that the sole purpose of the applications is to restructure Great Lakes system operations as a natural gas company into the partnership form of Great Lakes LP. Applicants further state that the applications will have no adverse impact on any of the existing services or rates of Great Lakes.

Comment date: May 14, 1990, in accordance with Standard Paragraph F at the end of this notice.

3. United Gas Pipe Line Co., Sea Robin Pipeline Co., United Gas Pipe Line Co.

[Docket Nos. CP90-1196-000,[1] CP90-1197-000, CP90-1198-000]

Take notice that on April 13, 1990, (Applicants) filed in the above referenced dockets, prior notice requests pursuant to §§ 157.205 and 284.223 of the Commission's Regulations under the Natural Gas Act for authorization to transport natural gas on behalf of various shippers under its blanket certificate issued pursuant to section 7 of the Natural Gas Act, all as more fully set forth in the prior notice requests which are on file with the Commission and open to public inspection and in the attached appendix.

Information applicable to each transaction including the identity of the shipper, the type of transportation service, the appropriate transportation rate schedule, the peak day, average day and annual volumes, and the docket numbers and initiation dates of the 120-day transaction under § 284.223 of the

[1] These prior notice requests are not consolidated.

Commission's Regulations has been provided by the Applicant and is included in the attached appendix.

The Applicant also states that it would provide the service for each shipper under an executed transportation agreement, and that the applicant would charge rates and abide by the terms and conditions of the referenced transportation rate schedule(s).

Comment date: June 7, 1990, in accordance with Standard Paragraph G at the end of this notice.

Docket number (date filed)	Applicant	Shipper name	Peak day [1] Avg., annual	Points of Receipt	Points of Delivery	Start-up date (rate schedule)	Related [2] dockets
CP90-1196-000 (4-13-90)	United Gas Pipe Line Company, P.O. Box 1478, Houston TX 77251-1478.	Kerr-McGee Corporation.	92,700 92,700 33,835,500	LA, MS, AL	LA, MS, AL	1-17-90 (ITS)	CP88-6-000 ST90-1801-000
CP90-1197-000 (4-13-90)	Sea Robin Pipeline Company, P.O. Box 1478, Houston, TX 77251-1478.	Corpus Christi Oil and Gas Company.	82,400 82,400 30,076,000	Off LA	LA	2-5-90 (ITS)	CP88-824-000 ST90-2165-000
CP90-1198-000 (4-13-90)	United Gas Pipe Line Company, P.O. Box 1478, Houston TX 77251-1478.	Kerr-McGee Corporation.	92,700 92,700 33,835,500	LA, MS, AL	LA, AL, MS	2-9-90 (ITS)	CP88-6-000 ST90-2417-000

[1] Quantities are shown in MMBtu unless otherwise indicated.
[2] The CP docket corresponds to applicant's blanket transportation certificate. If an ST docket is shown, 120-day transportation service was reported in it.

Standard Paragraphs:

F. Any person desiring to be heard or make any protest with reference to said filing should on or before the comment date file with the Federal Energy Regulatory Commission, 825 North Capitol Street NE., Washington, DC 20426, a motion to intervene or a protest in accordance with the requirements of the Commission's Rules of Practice and Procedure (18 CFR 385.211 and 385.214) and the Regulations under the Natural Gas Act (18 CFR 157.10). All protests filed with the Commission will be considered by it in determining the appropriate action to be taken but will not serve to make the protestants parties to the proceeding. Any person wishing to become a party to a proceeding or to participate as a party in any hearing therein must file a motion to intervene in accordance with the Commission's Rules.

Take further notice that, pursuant to the authority contained in and subject to jurisdiction conferred upon the Federal Energy Regulatory Commission by sections 7 and 15 of the Natural Gas Act and the Commission's Rules of Practice and Procedure, a hearing will be held without further notice before the Commission or its designee on this filing if no motion to intervene is filed within the time required herein, if the Commission on its own review of the matter finds that a grant of the certificate is required by the public convenience and necessity. If a motion for leave to intervene is timely filed, or if the Commission on its own motion believes that a formal hearing is required, further notice of such hearing will be duly given.

Under the procedure herein provided for, unless otherwise advised, it will be unnecessary for the applicant to appear or be represented at the hearing.

Any person or the Commission's staff may, within 45 days after the issuance of the instant notice by the Commission, file pursuant to Rule 214 of the Commission's Procedural Rules (18 CFR 385.214) a motion to intervene or notice of intervention and pursuant to § 157.205 of the Regulations under the Natural Gas Act (18 CFR 157.205) a protest to the request. If no protest is filed within the time allowed therefore, the proposed activity shall be deemed to be authorized effective the day after the time allowed for filing a protest. If a protest is filed and not withdrawn within 30 days after the time allowed for filing a protest, the instant request shall be treated as an application for authorization pursuant to section 7 of the Natural Gas Act.

Lois D. Cashell,

Secretary.

[FR Doc. 90-9901 Filed 4-27-90; 8:45 am]

BILLING CODE 6717-01-M

[Docket Nos. ER90-223-000, et al.]

Texas Utilities Electric Co., et al.; Electric Rate, Small Power Production, and Interlocking Directorate Filings

April 23, 1990.

Take notice that the following filings have been made with the Commission:

1. Texas Utilities Electric Co.

[Docket No. ER90-223-000]

Take notice that on April 17, 1990, Texas Utilities Electric Company (TU Utilities) tendered for filing its response to Staff's March 16, 1990, deficiency letter in this docket.

Comment date: May 8, 1990, in accordance with Standard paragraph E at the end of this notice.

2. New York State Electric & Gas Corp.

[Docket No. ER90-321-000]

Take notice that on April 16, 1990, New York State Electric & Gas Corporation (N&SEG) tendered for filing pursuant to § 35.13 of the regulations under the Federal Power Act, as a rate schedule, an agreement with Long Island Lighting Company (LILCO). The short term agreement provides that NYSEG shall sell surplus capacity and associated energy to LILCO. This constitutes merely a continued service under Rate Schedule NYSEG FERC No. 98. Service under this agreement shall begin on June 1, 1990 and terminate on September 30, 1990. This duration may be extended in writing by both parties.

NYSEG has filed a copy of this filing with Long Island Lighting Company and the Public Service Commission of the State of New York.

NYSEG requests that the 60-day filing requirements be waived and that June 1, 1990 be allowed as the effective date of the filing.

Comment date: May 8, 1990, in accordance with Standard paragraph E at the end of this notice.

3. Southern California Edison Co.

[Docket No. ER86-316-002]

Take notice that on March 26, 1990, Southern California Edison Company tendered for filing its compliance filing pursuant to the Commission's Opinion issued February 7, 1990.

Comment date: May 8, 1990 in accordance with Standard paragraph E at the end of this notice.

4. Arkansas Power & Light Co.

[Docket No. ER90-323-000]

Take notice that on April 16, 1990, Arkansas Power & Light Company (AP&L) tendered for filing an amendment dated April 9, 1990, to the Power Agreement of September 11, 1985 between AP&L and the City of North Little Rock, Arkansas. The amendment provides for an extension of the term of the Power Agreement through June 30, 1994, and has no impact on rates, contract capacity or revenue.

AP&L requests that the Commission waive any requirements with which AP&L has not already complied.

Comment date: May 8, 1990 in accordance with Standard paragraph E at the end of this notice.

5. Seminole Electric Cooperative, Inc. v. Florida Power & Light Co.

[Docket No. EL90-24-000]

Take notice that on April 16, 1990, Seminole Electric Cooperative, Inc. (Seminole) tendered for filing a complaint against Florida Power & Light Company (FPL). Seminole contends that, under its 1982 Interconnection Agreement with FPL, FPL since 1986 has been billing Seminole for operation and maintenance costs in a manner contrary to the terms of that Agreement.

Comment date: May 23, 1990 in accordance with Standard paragraph E at the end of this notice.

Standard Paragraph:

E. Any person desiring to be heard or to protest said filing should file a motion to intervene or protest with the Federal Energy Regulatory Commission, 825 North Capitol Street NE., Washington, DC 20426, in accordance with Rules 211 and 214 of the Commission's Rules of Practice and Procedure (18 CFR 385.211 and 385.214). All such motions or protests should be filed on or before the comment date. Protests will be considered by the Commission in determining the appropriate action to be taken, but will not serve to make protestants parties to the proceeding. Any person wishing to become a party must file a motion to intervene. Copies of this filing are on file with the Commission and are available for public inspection.

Lois D. Cashell,

Secretary.

[FR Doc. 90-9902 Filed 4-27-90; 8:45 am]

BILLING CODE 6717-01-M

[Docket No. TM90-2-23-000]

Eastern Shore Natural Gas Co.; Proposed Changes in FERC Gas Tariff

April 23, 1990

Take notice that Eastern Shore Natural Gas Company (ESNG) tendered for filing on April 18, 1990 a revised tariff sheet included in appendix A attached to the filing. Such sheet is proposed to be effective May 1, 1990.

ESNG states that the purpose of the filing is to "track" Transcontinental Gas Pipe Line Corporation's (Transco) increased fixed monthly TOP charges filed with the Commission on March 30, 1990 in Docket Nos. RP90-98-000 and RP90-99-000, respectively.

ESNG states that copies of the filing have been served upon its jurisdictional customers and interested State Commissions.

Any person desiring to be heard or to protest said filing should file a motion to intervene or protest with the Federal Energy Regulatory Commission, 825 N. Capitol Street, NE., Washington, DC 20426, in accordance with Rule 211 and Rule 214 of the Commission's Rules of Practice and Procedure (18 CFR 385.211 and 385.214). All such motions or protests should be filed on or before April 30, 1990. Protests will be considered by the Commission in determining the appropriate action to be taken, but will not serve to make protestants parties to the proceeding. Any person wishing to become a party must file a motion to intervene. Copies of this filing are on file with the Commission and are available for public inspection.

Lois D. Cashell,

Secretary.

[FR Doc. 90-9897 Filed 4-27-90; 8:45 am]

BILLING CODE 6717-01-M

[Docket No. RP90-2-23-001]

Great Lakes Gas Transmission Co.; Compliance Filing

April 23, 1990.

Take notice that on April 18, 1990, Great Lakes Gas Transmission Company (Great Lakes) filed certain revised tariff sheets to its FERC Gas Tariff, First Revised Volume No. 1, in compliance with the Commission's order of November 29, 1989.

Great Lakes states that these tariff sheets reflect the cost of service as filed in Docket No. RP90-20-000 adjusted to reflect the elimination of the cost of facilities not expected to be in service by May 1, 1990. It goes on to state that in addition, adjustments have been made to the base tariff rates to reflect various changes in the prices of natural gas from its supplier that have occurred during the suspension period.

Great Lakes requests to place into effect on May 1, 1990, subject to refund, the increase in rates and charges suspended by the Commission's order of November 29, 1989

Great Lakes states that this filing is being mailed to each of its customers, the Public Service Commissions of Minnesota, Wisconsin and Michigan and any other parties to this proceeding.

Any person desiring to protest said filing should file a protest with the Federal Energy Regulatory Commission, 825 North Capitol Street NE., Washington, DC 20426, in accordance with Rules 214 and 211 of the Commission's Rules of Practice and Procedure (18 CFR 385.214 and 385.211 (1989)). All such protests should be filed on or before April 30, 1990. Protests will be considered by the Commission in determining the appropriate action to be taken, but will not serve to make protestants parties to the proceeding. Persons that already are parties to this proceeding need not file a motion to intervene in this matter. Copies of this filing are on file with the Commission and are available for public inspection.

Lois D. Cashell,

Secretary.

[FR Doc. 90-9895 Filed 4-27-90; 8:45 am]

BILLING CODE 6717-01-M

[Docket No. RP89-234-003]

Moraine Pipeline Co.; Proposed Changes in FERC Gas Tariff

April 23, 1990.

Take notice that on April 16, 1990, Moraine Pipeline Company (Moraine) tendered for filing tariff sheets to be a part of its FERC Gas Tariff, Original Volume No. 1.

Moraine states that the sheets were submitted at the request of the FERC Staff and to further comply with the Commission's Order issued September 29, 1989 at Docket No. RP89-234-000. Moraine further states that the tariff sheets are deemed to have removed all conditions set forth in the September 29th order. In addition, pursuant to the Commission's Order issued November 29, 1989 at Docket No. RP89-234-001, Moraine included an "Authorized Overrun" provision under Rate Schedule ITS.

Moraine requested waiver of the Commission's Regulations to the extent necessary to permit the tariff sheets to become effective on their indicated effective dates.

Moraine states that copies of the filing is being mailed to Moraine's jurisdictional customers, interested state regulatory agencies and all parties set out on the official service list at Docket No. RP-89-234-000.

Any person desiring to protest said filing should file a protest with the Federal Energy Regulatory Commission, 825 North Capitol Street, NE., Washington, DC 20426, in accordance with Rules 214 and 211 of the Commission's Rules of Practice and Procedure (18 CFR 385.214, 385.211 (1989)). All such protests should be filed on or before April 30, 1990. Protests will be considered by the Commission in determining the appropriate action to be taken, but will not serve to make protestants parties to the proceeding. Persons that are already parties to this proceeding need not file a motion to intervene in this matter. Copies of this filing are on file with the Commission and are available for public inspection.

Lois D. Cashell,

Secretary.

[FR Doc. 90-9893 Filed 4-27-90; 8:45 am]

BILLING CODE 6717-01-M

[Docket No. CP88-651-002]

Northwest Pipeline Corp.; Proposed Change in FERC Gas Tariff

April 23, 1990.

Take notice that on April 13, 1990, Northwest Pipeline Corporation ("Northwest") tendered for filing and acceptance the following tariff sheets, to be a pert of its FERC Gas Tariff.

First Revised Volume No. 1

Sixty-fifth Revised Sheet No. 10
- Original Sheet No. 10.1
- Original Sheet No. 10.2

Seventh Revised Sheet No. 14
- Original Sheet No. 89
- Original Sheet No. 90
- Original Sheet No. 91
- Original Sheet No. 92
- Original Sheet No. 93
- Original Sheet No. 94
- Original Sheet No. 95
- Original Sheet No. 96
- Original Sheet No. 97
- Original Sheet No. 98
- Original Sheet No. 99

Second Revised Sheet No. 114
- Original Sheet No. 231
- Original Sheet No. 232
- Original Sheet No. 233
- Original Sheet No. 234
- Original Sheet No. 235
- Original Sheet No. 236
- Original Sheet No. 237

Original Volume No. 1-A

Second Revised Sheet No. 314

The above tariff sheets were filed to reflect the terms and conditions applicable to Northwest's new Rate Schedule SGS-2F and SGS-2I services which were authorized by the Commission in an Order Granting Certificate issued by the Commission on March 14, 1990.

A copy of this filing is being served on all parties of record in the above referenced docket and on affected state regulatory commissions.

Any person desiring to protest said filing should file a protest with the Federal Energy Regulatory Commission, 825 North Capitol Street NE., Washington, DC 20426, in accordance with §§ 385.214 and 385.211 of the Commission's Rules of Practice and Procedure. All such protests should be filed on or before April 30, 1990. Protests will be considered by the Commission in determining the appropriate action to be taken, but will not serve to make protestants parties to the proceeding. Persons that are already parties to this proceeding need not file a motion to intervene in this matter. Copies of this filing are on file with the Commission and are available for public inspection.

Lois D. Cashell,

Secretary.

[FR Doc. 90-9898 Filed 4-27-90; 8:45 am]

BILLING CODE 6717-01-M

[Docket No. RP90-102-000]

Tarpon Transmission Co.; Tariff Filing

April 23, 1990.

Take notice that on April 18, 1990, Tarpon Transmission Company (Tarpon) tendered for filing with the Commission as part of its FERC Gas Tariff, Original Volume No. 1, Third Revised Sheet No. 2A, to be effective on April 18, 1990.

Tarpon states that the tariff sheet, which reinstates a maximum base rate of 16.88 cents per Mcf for all three of Tarpon's rate schedules, has been filed in accordance with the Commission's "Order on Remand and Establishing Hearing Procedures," issued April 18, 1990, in Docket No. RP84-82-004.

Tarpon further states that, consistent with the Commission's Order on Remand, it will file its proposal for collecting revenues lost from the implementation of the Commission's remanded orders in the instant docket in the near future.

Tarpon requests that the Commission waive its 30-day notice requirement and any other applicable regulations to permit the tariff sheet to become effective on April 18, 1990. Tarpon states that good cause exists for such waiver, inasmuch as Third Revised Sheet No. 2A merely reinstates Tarpon's filed rate, which the Commission has now found is just and reasonable.

Tarpon states that copies of the filing are being mailed to all parties in Docket Nos. RP84-82, *et al.* and all of Tarpon's shippers.

Any person desiring to be heard or to protest said filing should file a motion to intervene or protest with the Federal Energy Regulatory Commission, 825 North Capitol Street, NE., Washington, DC 20426, in accordance with §§ 385.214 and 385.211 of the Commission's Rules and Regulations. All such motions or protests should be filed on or before April 30, 1990. Protests will be considered by the Commission in determining the appropriate action to be taken, but will not serve to make protestants parties to the proceeding. Any person wishing to become a party must file a motion to intervene. Copies of this filing are on file with the Commission and are available for public inspection in the public reference room.

Lois D. Cashell,

Secretary.

[FR Doc. 90-9894 Filed 4-27-90; 8:45 am]

BILLING CODE 6717-01-M

[Docket No. PR90-5-000]

Seagull Shoreline System; Petition for Rate Approval

April 23, 1990.

Take notice that on April 13, 1990, Seagull Shoreline System filed, pursuant to § 284.123(b)(2) of the Commission's regulations, a petition for rate approval requesting that the Commission approve as fair and equitable a maximum rate of 11.19 cents per MMBtu for transportation of natural gas under section 311(a)(2) of the Natural Gas Policy Act of 1978 (NGPA).

Seagull Shoreline's petition states that it is a Texas general partnership and it owns an intrastate pipeline extending approximately 53 miles from state tract MAT Block 624 onshore to an interconnection with Houston Piple Line Company and further extending approximately 13 miles from Oyster Lake treating plant to interconnections with Valero Transmission, L.P. and Texas Eastern Transmission Corporation at Texas Eastern's Blessing Station.

Pursuant to § 284.123(b)(2)(ii), if the Commission does not act within 150 days of the filing date, the rate will be deemed to be fair and equitable and not in excess of an amount which interstate pipelines would be permitted to charge for similar transportation service. The Commission may, prior to the expiration

of the 150 day period, extend the time for action or institute a proceeding to afford parties an opportunity for written comments and for the oral presentation of views, data and arguments.

Any person desiring to participate in the rate proceeding must file a motion to intervene in accordance with §§ 385.211 and 385.214 of the Commission's Rules of Practice and Procedures. All motions must be filed with the Secretary of the Commission on or before May 9, 1990. The petition for rate approval is on file with the Commission and is available for public inspection.

Lois D. Cashell,

Secretary.

[FR Doc. 90-9896 Filed 4-27-90; 8:45 am]

BILLING CODE 6717-01-M

[Docket Nos. RP89-120-004, TA89-1-55-005, GT90-7-003, TQ90-2-55-001, TM90-2-55-002, TQ90-3-55-001]

Questar Pipeline Co.; Tariff Filing

April 23, 1990.

Take notice that Questar Pipeline Company on April 13, 1990, tendered for filing and acceptance the following tariff sheets to its previously effective and currently effective FERC Gas Tariffs.

FIRST REVISED VOLUME NO. 1

Tariff sheet	Requested effective date
Third Revised Second Substitute Twenty-First Revised Sheet No. 12.	June 1, 1989.
Third Revised Substitute Twenty-Second Revised Sheet No. 12.	July 1, 1989.
Third Revised Second Substitute Twenty-Third Revised Sheet No. 12.	September 1, 1989.
Third Revised Second Substitute Twenty-Fourth Revised Sheet No. 12.	October 1, 1989.
Third Revised Twenty-Fifth Revised Sheet No. 12.	November 1, 1989.
Second Substitute First Revised Twenty-Sixth Revised Sheet No. 12.	December 1, 1989.
ORIGINAL VOLUME NO. 1	
Second Substitute Original Sheet No. 12.	January 1, 1990.
Substitute First Revised Sheet No. 12	February 1, 1990.
Substitute Second Revised Sheet No. 12.	March 1, 1990.
Substitute Third Revised Sheet No. 12	March 16, 1990.
First Revised Fourth Revised Sheet No. 12.	May 1, 1990.
First Revised Fifth Revised Sheet No. 12.	June 1, 1990.
ORIGINAL VOLUME NO. 1-A	
Second Substitute Original Sheet No. 5.	January 1, 1990.
First Revised Sheet No. 5	June 1, 1990.

FIRST REVISED VOLUME NO. 1—Continued

Tariff sheet	Requested effective date
ORIGINAL VOLUME NO. 3	
Substitute Original Sheet No. 8	January 1, 1990.
First Revised Sheet No. 8	June 1, 1990.

Questar Pipeline states that this filing (1) corrects the pagination of tariff sheets filed with its October 24, 1989, Offer of Settlement in Docket No. RP89-120-000, (2) incorporates into previously filed Statements of Rates to Original Volume Nos. 1, 1-A and 3 the volumetric surcharge and fixed monthly charge that were approved by the Commission in its March 13, 1990, order approving the October 24 Offer of Settlement, (3) reflects the expiration of the first 12-month period of the initial volumetric surcharge and fixed monthly charge in accordance with §§ 3(d) (v)(1) and (vi)(1) to Rate Schedule CD-1 and § 18.5(1) to the General Terms and Conditions of Original Volume Nos. 1 and 1-A of Questar Pipeline's tariff and (4) restates its Account No. 191 surcharge adjustment effective June 1, 1989, through May 31, 1990, consistant with the Commission's March 20, 1990, order granting rehearing in Docket No. TA89-1-55-003.

Questar Pipeline requests waiver of 18 CFR 154.51 so that the proposed tariff sheets may become effective as shown.

Any person desiring to protest said filing should file a protest with the Federal Energy Regulatory Commission, 825 North Capitol Street, NE., Washington, DC 20426, in accordance with Rules 385.211 and 385.214 of the Commission's Rules of Practice and Procedure (18 CFR 385.211 and 385.214). All such protests should be filed on or before April 30, 1990. Protests will be considered by the Commission in determining the appropriate action to be taken, but will not serve to make protestants parties to the proceeding. Persons that are already parties to this proceeding need not file a motion to intervene in this matter. Copies of this filing are on file with the Commission and are available for public inspection.

Lois D. Cashell,

Secretary.

[FR Doc. 90-9899 Filed 4-27-90; 8:45 am]

BILLING CODE 6717-01-M

Office of Hearings and Appeals

Issuance of Decisions and Orders During the Week of February 19 Through February 23, 1990

During the week of February 19 through February 23, 1990, the decisions and orders summarized below were issued with respect to appeals and applications for exception or other relief filed with the Office of Hearings and Appeals of the Department of Energy. The following summary also contains a list of submissions that were dismissed by the Office of Hearings and Appeals.

Appeal

Haddon, Morgan & Foreman, P.C., 2/22/90; LFA-0026

Haddon, Morgan & Foreman, P.C. filed an Appeal from a partial denial by the Albuquerque Operations Office (AOO) of a request for information which the firm had submitted under the Freedom of Information Act (FOIA). The firm had sought all documents seized at the AOO on or after June 5, 1989 in connection with the Rocky Flats Plant investigation by the Federal Bureau of Investigation (FBI). The AOO withheld one six page handwritten internal memorandum, concerning a proposal to reduce waste products, citing Exemption 5 of the FOIA. The Appellant challenged the AOO's determination that the withheld document fell within the scope of Exemption 5, maintaining that the DOE's release of the document to the FBI operated as a waiver of any exemption which might otherwise have applied. In considering the Appeal, the DOE found that the withheld document consisted of an internal predecisional memorandum which was properly withheld under Exemption 5. The DOE rejected the argument that it had waived the right to invoke Exemption 5 by disclosing the document to another federal agency. The DOE also found that the document contained no reasonably segregable factual material that could be released without compromising other properly withheld material.

Remedial Order

Engineered Operating Co., J.W. Akin, 2/23/90; HRO-00068

Engineered Operating Company and J.W. Akin, (the Respondents) filed Statements of Objections to a Proposed Remedial Order (PRO) issued by the Economic Regulatory Administration (the ERA) on June 3, 1982. In the PRO, the ERA alleged that the Respondents miscertified price-controlled crude oil as Stripper Well crude oil in violation of the rules applicable to the pricing of

domestically produced crude oil during the period September 1973 through June 1980. In considering the Respondents' objections to the PRO, the DOE rejected the Respondents' claims that: (i) The Mandatory Petroleum Pricing Regulations (MPPR) were constitutionally infirm; (ii) the OHA is without authority to adjudicate violations of the MPPR; (iii) the Respondents cannot be held liable for the payment of interest; (iv) the proceeding is barred by a state statute of limitations; (v) the PRO fails to set forth an adequate statement of the factual and legal basis for its allegations; (vi) the ERA improperly treated certain crude oil leases as single properties; (vii) the PRO improperly excluded injection wells from well counts; (viii) the ERA improperly failed to treat dual completion wells as two wells for the purpose of well counts; (ix) the separate reservoirs involved in the PRO should be treated as separate properties under the "Very Large Tract" or "Severance Tax Accountability" criteria set forth in Ruling 1977-1; (x) the Respondents cannot be held liable for any overcharges that occurred in connection with the subject properties; and (xi) the PRO is based upon erroneous factual determinations. However, the DOE agreed that Engineered should not be held liable for crude oil overcharges made before it became operator of the properties in question. The DOE determined that the Respondents' Statement of Objections be granted in part and the PRO be modified and then issued as a Final Remedial Order. The amount of the overcharges sustained in the Decision and Order is $1,661,012.18.

Request for Exception

Franken Oil and Distributing Co., Inc., 2/22/90; LEE-0005

Franken Oil and Distributing Company, Inc., filed an Application for Exception from the Energy Information Administration (EIA) reporting requirements in which the firm sought relief from filing Form EIA-782B, entitled "Reseller/Retailers' Monthly Petroleum Product Sales Report." In considering the request, the DOE found that the firm was not adversely affected by the reporting requirement in a way that was significantly different from the burden borne by similar reporting firms. Accordingly, exception relief was denied with respect to the filing of Form EIA-782B.

Refund Applications

Gulf Oil Corp./Apex Oil Co., 2/23/90; RF300-10500

The DOE issued a Decision and Order concerning the Application for Refund submitted in the Gulf Oil Corporation special refund proceeding by Apex Oil Company. The Application was approved under the 40 percent presumption of injury. The refund granted in this Decision, including interest, is $24,450.

Gulf Oil Corp./C&G Gulf Service, 2/23/90; RR300-4

The DOE issued a Decision and Order concerning a Motion for Reconsideration submitted on behalf of C&G Gulf Service, a dissolved partnership, in the Gulf Oil Corporation special refund proceeding. The Motion argued that Gaetano Vitti, as the representative of the partnership, should have received a refund based on 100 percent of C&G Gulf Service's claim. The DOE reaffirmed its original determination in *Gulf Oil Corporation/C&G Gulf Service*, 19 DOE ¶ 85,847 (1989), in ruling that as an owner of 50 percent of C&G Gulf Service's assets, Mr. Vitti was only entitled to 50 percent of C&G Gulf Service's total claim. The Motion for Reconsideration was therefore denied.

Gulf Oil Corp., J.D. Streett & Co., Inc., 2/23/90; RF300-7519

The DOE issued a Decision and Order concerning an Application for Refund submitted in the Gulf Oil Corporation special refund proceeding by J.D. Streett & Company, Inc. (Streett). Streett's application was approved using a presumption of injury. However, because the firm is the subject of a Remedial Order which is pending on Appeal at the Federal Energy Regulatory Commission, the Office of the Controller was directed to establish a separate interest-bearing escrow account on behalf of J.D. Streett & Company and deposit the total refund granted to Streett into that account. The refund granted in this Decision, which includes principal and interest, is $12,619.

Gulf Oil Corp./Charley's Gulf Service, et al., 2/23/90; RF300-8822, et al.

The DOE issued a Decision and Order granting 13 Applications for Refund filed on behalf of retailers in the Gulf Oil Corporation special refund proceeding. Five of the applications were originally filed through P.A.D., Inc. Because P.A.D. and its president, Herbert Tanner, are denied the right to participate in all refund proceedings, the DOE will mail the refund checks directly to the applicants represented by P.A.D. Three of the applications were originally filed through Federal Refunds, Inc. (FRI). Pursuant to *Gulf Oil Corporation/LeBlanc's Gulf Service*, 18 DOE ¶ 85,876 (1989), the DOE will mail the refund checks of applicants represented by FRI directly to the applicants. Akin Energy, Inc. submitted three "amended" applications on behalf of three claimants whose claims were originally filed through P.A.D., Inc. Because these filings contributed nothing to the administrative processing of these claims, the DOE refused to ratify Akin's attempt to insert itself as the new representative of these claimants. The refund checks for these three cases will be mailed directly to the applicants. The total amount of the refunds granted is $25,040.

Gulf Oil Corp./M.B. Reed Co. Federal Express Corp. Westvaco Corp., 2/23/90; RF300-8840, RF300-9309, RF300-9311.

The DOE issued a Decision and Order granting Applications for Refund filed by Federal Refunds, Inc. (FRI) on behalf of three end-user applicants, M.B. Reed Company, Federal Express Corp., and Westvaco Corp., in the Gulf Oil Corporation special refund proceeding. Pursuant to *Gulf Oil Corporation/LeBlanc's Gulf Service*, 18 DOE ¶ 85,876 (1989), the refund checks were mailed directly to the three applicants, not to FRI. The total amount of the refunds granted is $17,708.

Gulf Oil Corp./Shean's Service Pro Service Station Don Service, 2/23/90; RF300-9915, RF300-9945, RF300-9946.

The DOE issued a Decision and Order concerning three Applications for Refund submitted in the Gulf Oil Corporation special refund proceeding. Each applicant established that it purchased some or all of its Gulf products indirectly from Gulf jobbers. These jobbers did not show that they passed on Gulf alleged overcharges to their customers. Accordingly, the DOE treated the three applicants in the same manner as it generally treats applicants who purchased directly from Gulf. P.A.D., Inc. originally filed these three applicants and Akin Energy filed "amended" refund applications on behalf of the three applicants. All correspondence, including the refund checks, was sent directly to the applicants. Each application was approved using a presumption of injury. The sum of the refunds granted in this Decision is $3,925.

James Lonny Bettis, 2/22/90; RC272-77.

The DOE issued a Supplemental Decision and Order rescinding a refund granted to James Lonny Bettis in *City of Decatur, et al.*, Case Nos. RF272-75217, *et al.* (January 16, 1990). The amount of the refund rescinded is $741.

Murphy Oil Corp./Ok Spur Station, 2/22/90; RF309-850, RF309-851.

The DOE issued a Decision and Order granting two Apllications for Refund in the Murphy Oil Corporation special refund proceeding filed by OK Spur Station. One of the applications covered the period in which the station was an equal partnership, while the other application covered the period after which one of the partners became the sole owner of the station. Accordingly, the refund based on the station's purchases made during the period of joint ownership was equally divided between the partners, and the refund based on the purchases made during the period of sole proprietorship was granted to the sole proprietor. The total volume approved in this Decision was 3,318,988 gallons, and the total of the refunds granted was $3,382 (comprised of $2,712 in principal and $670 in interest).

Placid Oil Co./System Fuels, Inc., 2/23/90; RF314-37.

The DOE issued a Decision and Order concerning an Application for Refund submitted in the Placid Oil Company special refund proceeding by System Fuels, Inc., a fuel purchasing agent for a regulated public utility. The application was approved under the end-user presumption of injury. The amount of the refund granted is $6,883.

Red Triangle Oil Co., 2/22/90; RF272-36292.

The DOE issued a Decision and Order denying an Application for Refund filed in the subpart V crude oil proceeding. The applicant was a retailer of petroleum products during the period August 19, 1973 through January 27, 1981. Because the applicant failed to demonstrate that it was injured due to crude oil overcharges, the applicant was ineligible for a crude oil refund.

Thunderbird Motor Freight Lines, 2/22/90; RF272-15498, RD272-15498.

The DOE issued a Decision and Order concerning an Application for Refund filed by Thunderbird Motor Freight Lines (Thunderbird), a trucking company, in the subpart V crude oil proceeding. A group of States and Territories (the States) objected to Thunderbird's application on the grounds that certain Interstate Commerce Commission fuel surcharge regulations may have enabled Thunderbird to pass through increased petroleum costs to consumers during the petroleum price control period. The States argued that this evidence was sufficient to rebut the end-user presumption relied upon by Thunderbird and therefore the DOE should deny Thunderbird's application. The DOE granted Thunderbird's refund application, determining that the States had failed to show that Thunderbird itself actually passed through increased fuel costs. The DOE also denied the States' Motion for Discovery, determining that it was not appropriate where the States had not presented relevant evidence to rebut Thunderbird's presumption of injury.

Refund Applications

The Office of Hearings and Appeals granted refunds to refund applicants in the following Decisions and Orders:

Name	Case No.	Date
Arthur Whitcomb, Inc.	RF272-35766	2/22/90
Atlantic Richfield Co./ Dinapoli Service Station, *et al.*	RF304-4240	2/22/90
Atlantic Richfield Co./ Ray's Arco *et al.*	RF304-6214	2/23/90
Atlantic Richfield Co./ Rock's Service *et al.*	RF304-6686	2/23/90
Atlantic Richfield Co./ Stan Boyett & Son *et al.*	RF304-2140	2/23/90
Bronx Park East Housing Co. *et al.*	RF272-42064	
Crown Central Petroleum Corp./ Alice E. Foster's Crown, Michael E. and Emma Foster's Crown, Haynie's Crown.	RF313-316 RF313-317 RF313-318	
Exxon Corp./ Bennett's Grocery *et al.*	RF307-2009	2/23/90
Exxon Corp./ Champaign Builders Supply, Inc. *et al.*	RF307-801	2/22/90
Exxon Corp./Ralph Watson Oil Co., Superior Oil Co., Inc Garton Oil Co., Inc.	RF307-7127 RF307-7130 RF307-7147	2/22/90
Exxon Corp./Village of Pleasantville *et al.*	RF307-9200	2/22/90
Gulf Oil Corp./Byrd Oil Co. *et al.*	RF300-3572	2/23/90
Gulf Oil Corp./Dave's Service *et al.*	RF300-10112	2/23/90
Gulf Oil Corp./David B. McMinn *et al.*	RF300-9537	2/22/90
Gulf Oil Corp./Earl's Gulf *et al.*	RF300-10658	2/22/90
Gulf Oil Corp./John Holt Gulf Station.	RF300-6616	2/22/90
Gulf Oil Corp./Larry Gunn.	RF300-10103	2/23/90
John J. Bowes	RF300-10391	
Gulf Oil Corp./ Madisonville Gulf *et al.*	RF300-10610	2/23/90
Gulf Oil Corp./Rich's Service *et al.*	RF300-10168	2/23/90
J.W. Nelson Transport, Inc. *et al.*	RF272-56503	2/22/90
Mill Service, Inc. *et al.*	RF272-56000	2/23/90
Morton Thiokol, Inc.	RF272-9882	2/22/90
Polk County Highway Dept. *et al.*	RF272-38048	2/22/90
Shell Oil Co./Richard Huhtala *et al.*	RF315-8205	2/22/90
Taos Gravel Products, Inc. *et al.*	RF272-21067	2/22/90
Trump Village Sect. 3 Inc. *et al.*	RF272-53606	2/23/90

The following submissions were dismissed:

Name	Case No.
Airport Exxon	RF307-10075
Albuquerque Tribune	LFA-0024
Glover Club Foods	RF272-70350
D&M Grocery & Station	RF307-1996
Ed Silva's Exxon	RF307-10041
L.J. Hunt	RF307-2530
Leonard J. Clanton	RF307-10036
McCarty's Arco	RF304-7943
Parkway Arco	RF304-3726
Regal Arco	RF304-8024
Sixth Street Arco	RF304-8025
South Dakota Shell	RF315-9063
The Henley-Lundgren Company	RF307-10003
The Salvation Army	RF272-76853
W.C. Knolle, Inc.	RF300-9341

Copies of the full text of these decisions and orders are available in the Public Reference Room of the Office of Hearings and Appeals, Room 1E-234, Forrestal Building, 1000 Independence Avenue, SW., Washington, DC 20585, Monday through Friday, between the hours of 1:00 p.m. and 5:00 p.m., except federal holidays. They are also available in Energy Management: Federal Energy Guidelines, a commercially published loose leaf reporter system.

Dated: April 20, 1990.

George B. Breznay,

Director, Office of Hearings and Appeals.

[FR Doc. 90-9973 Filed 4-27-90; 8:45 am]

BILLING CODE 6450-01-M

Issuance of Proposed Decision and Order During the Week of February 26 Through March 2, 1990

During the week of February 26 through March 2, 1990, the proposed decisions and orders summarized below were issued by the Office of Hearings and Appeals of the Department of Energy with regard to Applications for Exception.

Under the procedural regulations that apply to exception proceedings (10 CFR part 205, subpart D), any person who will be aggrieved by the issuance of a proposed decision and order in final form may file a written notice of objection within ten days of service. For purposes of the procedural regulations, the date of service of notice is deemed to be the date of publication of this Notice or the date an aggrieved person receives actual notice, whichever occurs first.

The procedural regulations provide that an aggrieved party who fails to file a Notice of Objection within the time period specified in the regulations will be deemed to consent to the issuance of the proposed decision and order in final form. An aggrieved party who wishes to contest a determination made in a proposed decision and order must also file a detailed statement of objections within 30 days of the date of service of the proposed decision and order. In the statement of objections, the aggrieved party must specify each issuance of fact or law that it intends to contest in any further proceeding involving the exception matter.

Copies of the full text of these proposed decisions and orders are available in the Public Reference Room of the Office of Hearings and Appeals, Room 1E-234, Forrestal Building, 1000 Independence Avenue, SW., Washington, DC 20585, Monday through Friday, between the hours of 1:00 p.m. and 5:00 p.m., except federal holidays.

Dated: April 20, 1990.

George B. Breznay,

Director, Office of Hearings and Appeals.

Bi-State Petroleum, Sparks, NV; Lee-0010 Reporting Requirement

Bi-State Petroleum filed an Application for Exception from the Energy Information Administration reporting requirements. The exception request, if granted, would relieve Bi-State Petroleum from the requirement to file Form EIA-821, "Annual Fuel Oil and Kerosene Sales Report." On March 2, 1990, the Department of Energy issued a Proposed Decision and Order which tentatively determined that exception relief be denied.

Foster Fuels, Inc., Brookneal, VA; Lee-0004 Reporting Requirements

Foster Fuels, Inc., filed an Application for Exception from the Energy Information Administration requirement that the firm file Form EIA-782B, entitled "Reseller/Retailers' Monthly Petroleum Product Sales Report." In considering the request, the Department of Energy found that the firm was not adversely affected by the reporting requirement in a way that was significantly different from other similar reporting firms. Accordingly, on February 26, 1990, the Department of Energy issued a Proposed Decision and Order which tentatively determined that exception relief be denied.

McMahan Oil Co., Easton, MD; Lee-0006 Reporting Requirements

McMahan Oil Company filed an Application for Exception from the Energy Information Administration reporting requirements. The exception request, if granted, would relieve McMahan Oil Company from the requirement to file Form EIA-782B, "Resellers'/Retailers' Monthly Petroleum Products Sales Report." On February 28, 1990, the Department of Energy issued a Proposed Decision and Order which tentatively determined that exception relief be denied.

[FR Doc. 90-9974 Filed 4-27-90; 8:45 am]

BILLING CODE 6450-01-M

Cases Filed During the Week of March 16 Through March 23, 1990

During the week of March 16 through March 23, 1990, the applications for exception or other relief listed in the appendix to this Notice were filed with the Office of Hearings and Appeals of the Department of Energy.

Under DOE procedural regulations, 10 CFR part 205, any person who will be aggrieved by the DOE action sought in these cases may file written comments on the application within ten days of service of notice, as prescribed in the procedural regulations. For purposes of the regulations, the date of service of notice is deemed to be the date of publication of this Notice or the date of receipt by an aggrieved person of actual notice, whichever occurs first. All such comments shall be filed with the Office of Hearings and Appeals, Department of Energy, Washington, DC 20585.

Dated: April 20, 1990.

George B. Breznay,

Director, Office of Hearings and Appeals.

List of Cases Received by the Office of Hearings and Appeals

[Week of March 16 through March 23, 1990]

Date	Name and location of applicant	Case No.	Type of submission
Mar. 19, 1990	Gene Clark Operating Company, Inc., Denver, Colorado.	LEE-0013	Exception to the Reporting Requirements. If granted: Gene Clark Operating Company, Inc. would not be required to file Form EIA-23, "Annual Survey of Domestic Oil and Gas Reserves.
Mar. 26, 1990	Public Service Electric & Gas Company, Washington, DC.	RR272-56	Request for Modification/Rescission in the Crude Oil Refund Proceeding. If granted: The March 12, 1990 Decision and Order (RF272-78508) issued to Public Service Electric & Gas Company would be modified regarding the firm's application for refund submitted in the Crude Oil refund proceeding.

Refund Applications Received

Date received	Name of refund proceeding/name of refund application	Case No.
3/14/90	Earl C. Foster & Son, Inc.	RF315-9897
3/14/90	Howell Shell	RF315-9898
3/14/90	Midfield Shell Service.	RF315-9899
3/16/90 thru 3/23/90.	Texaco Oil Refund, Application Received.	RF321-2117 thru RF321-2510
3/16/90 thru 3/23/90.	Atlantic Richfield, Application Received.	RF304-11596 thru RF304-11659

Refund Applications Received—Continued

Date received	Name of refund proceeding/name of refund application	Case No.
3/16/90 thru 3/23/90.	Gulf Oil Refund, Application Received.	RF300-11044 thru RF300-11066
3/16/90 thru 3/23/90.	Crude Oil Refund, Application Received.	RF272-78518 thru RF272-78528
3/19/90	Freeway Exxon	RF307-10114
3/19/90	Petersburg Pike Crown.	RF313-321
3/19/90	Woodham's Spur	RF309-1392

Refund Applications Received—Continued

Date received	Name of refund proceeding/name of refund application	Case No.
3/20/90	David G. Palamara	RF315-9907
3/20/90	David G. Palamara	RF315-9908
3/21/90	Palacios Shell Service.	RF315-9900
3/22/90	Pennzoil/Louisiana	RQ10-551
3/23/90	Peter Boyko	RF225-11093

[FR Doc. 90-9972 Filed 4-27-90; 8:45 am]

BILLING CODE 6450-01-M

ENVIRONMENTAL PROTECTION AGENCY

[FRL-3760-1]

Prevention of Significant Deterioration of Air Quality (PSD); Determination of Exemption; Elliot Hospital, Manchester, NH

AGENCY: U.S. Environmental Protection Agency (EPA).

ACTION: Notice of Final Determination of Exemption.

SUMMARY: The purpose of this notice is to announce that on March 7, 1990, Judd Gregg, Governor of New Hampshire, issued a final determination that the Elliot Hospital power plant modification project located at the Elliot Hospital in Manchester, New Hampshire is exempt from EPA's PSD review requirements (40 CFR 52.21(j)-(r)). This determination was made under the March 18, 1982 PSD delegation of authority agreement between Region I and the State of New Hampshire. The determination was issued because the institutional arrangement involving the hospital is such as to render the hospital a "nonprofit health or education" institution pursuant to section 169(1) of the Clean Air Act (42 U.S.C. 7479(1) and 40 CFR 52.21(i)(4)(vi)). Accordingly, the installation and operation of an incinerator designed to combust 900 pounds of hospital waste per hour and a boiler fired with No. 6 fuel oil (2.0% sulfur, maximum) and natural gas at the Elliot Hospital will not be subject to PSD review requirements.

DATES: The determination was effective March 7, 1990.

FOR FURTHER INFORMATION CONTACT: Mr. John J. Courcier, State Air Programs Branch, U.S. Environmental Protection Agency, Region I, John F. Kennedy Federal Building, room 2311, Boston, Massachusetts 02203, (617/565-3260) or Mr. Donald Davis, New Hampshire Air Resources Division, 64 North Main Street, Concord, New Hampshire 03302-2033 (603/271-1370).

SUPPLEMENTARY INFORMATION: This final determination of exemption was made in response to a request dated March 2, 1990 by Kimry A. Johnsrud, Vice President of Administrative Services, Elliot Hospital.

Copies of this Final Determination and all information used in making the determination are available for public inspection at the New Hampshire Air Resources Division, 64 North Main Street, Concord, New Hampshire 03302. Copies of the determination are also available for public inspection at the U.S. Environmental Protection Agency, Region I, John F. Kennedy Federal Building, room 2311, Boston, Massachusetts 02203.

The determination is a final action under the Clean Air Act. Under section 307(b)(1) of the Act, judicial review of this determination is available only by the filing of a petition for review in the United States Court of Appeals for the First Circuit within 60 days from the date of publication in the **Federal Register**. Under section 307(b)(2) of the Clean Air act, this final determination shall not be subject to later judicial review in civil or criminal proceedings for enforcement.

Dated: April 17, 1990.

Julie Belaga,

Regional Administrator, U.S. Environmental Protection Agency, Region I.

[FR Doc. 90-9980 Filed 4-27-90; 8:45 am]

BILLING CODE 6560-50-M

[FRL-3760-5]

Decision Pursuant to the Clean Water Act

AGENCY: Environmental Protection Agency (EPA).

ACTION: Notice of availability of decisions.

SUMMARY: On 23 March 1990, EPA, Region IX, issued its decisions on the lists of impaired waters, point sources, and pollutants for American Samoa, Guam, the State of Hawaii, and the Commonwealth of the Northern Mariana Islands developed pursuant to section 304(l) of the Clean Water Act. Copies of these decisions can be obtained from the contact person identified below.

FOR FURTHER INFORMATION CONTACT: Doug Eberhardt by telephone at (415) 705-2181, or by mail at: Environmental Protection Agency, Region IX (W-3-2), 1235 Mission Street, San Francisco, CA 94103.

SUPPLEMENTARY INFORMATION: Section 304(l) of the Clean Water Act, as amended by the Water Quality Act of 1987, requires every State to develop lists of impaired waters, identify certain point sources and amounts of pollutants causing toxic impact, and to develop individual control strategies for each point source.

On 5 June 1989, EPA issued decisions proposing to approve the lists of waters, point sources, and pollutants submitted by American Samoa, Guam, the State of Hawaii, and the Commonwealth of the Northern Mariana Islands. At that time, EPA solicited comments from the public on its decisions. EPA, pursuant to section 304(l)(1)(3), also solicited petitions from the public to make additions to the waters already listed under section 304(l)(1). Notice of these actions appeared in the **Federal Register** on 9 June 1989 (54 FR 24748).

The public comment and petition period closed on 13 October 1989. EPA received a petition from the Natural Resources Defense Council (NRDC) which sought to include additional waters and point sources on the lists submitted by the State of Hawaii. EPA has considered the petition and decided not to add the waters and point sources to the Hawaii lists. EPA's response to NRDC's petition is contained in its decision.

EPA's decisions to approve the lists and the documentation supporting its decisions are on file at the EPA, Region IX, office. To make arrangements to examine these records, or to obtain copies of the decisions, contact the person named above.

Dated: March 23, 1990.

Keith Takata,

Acting Director, Water Management Division, U.S. EPA Region 9.

[FR Doc. 90-9983 Filed 4-27-90; 8:45 am]

BILLING CODE 6560-50-M

FEDERAL COMMUNICATIONS COMMISSION

Information Collection Requirement Approval by Office of Management and Budget

April 23, 1990.

The following information collection requirement has been approved by the Office of Management and Budget under the Paperwork Reduction Act of 1980 (44 U.S.C. 3507). For further information contact Doris Benz, Federal Communications Commission, telephone (202) 632-7513.

OMB No.: 3060-0046.

Title: Application for New or Modified Common Carrier Radio Station Authorization Under part 22.

Form No.: FCC 401.

The approval on form FCC 401 has been extended through January 31, 1993. The August 1987 edition with an expiration date of November 30, 1989 will remain in use until updated forms are available.

Federal Communications Commission.

Donna R. Searcy,

Secretary.

[FR Doc. 90-9887 Filed 4-27-90; 8:45 am]

BILLING CODE 6712-01-M

Applications for Consolidated Hearing

1. The Commission has before it the following groups of mutually exclusive applications for six new FM stations:

Applicant, City, and State	File No.	MM docket No.
I		
A. Alpha & Omega Educational Broadcast Foundation, Inc.; East Lyme, CT.	BPED-880126MA	90-153
B. Sound Broadcasting Co.; East Lyme, CT.	BPH-880126ML	
C. Del Raycee; East Lyme, CT.	BPH-880126MW	
D. Leverty Partnership; East Lyme, CT.	BPH-880126NA	
E. Radio South Burlington, Inc.; East Lyme, CT.	BPH-880126NF	
F. Margaret O. Pescatello; East Lyme, CT.	BPH-880126OE	
Issue Heading and Applicants		
1. Financial, C		
2. Air Hazard, E		
3. Comparative, All applicants		
4. Ultimate, All applicants		
II		
A. Soledad Radio Limited Partnership; Soledad, CA.	BPH-880602OC	90-149
B. Kyra O. Krulicki; Soledad, CA.	BPH-880602OI	
C. Monterey County Broadcasters, Inc. (Previously Dismissed); Soledad, CA.	BPH-880602NL	
Issue Heading and Applicants		
1. Comparative, A,B		
2. Ultimate, A,B		
III		
A. A.L.P. Limited Partnership; Jeffersonville, GA.	BPH-880602ND	90-144
B. Joseph Lark Kitchens; Jeffersonville, GA.	BPH-880602NM	
C. Stehle Broadcasting, Inc.; Jeffersonville, GA.	BPH-880602NS	
Issue Heading and Applicants		
1. Financial Qualifications, A		
2. Comparative, A,B,C		
3. Ultimate, A,B,C		
IV		
A. Kentucky State University; Frankfort, KY.	BPED-880302ML	90-152
B. Kentucky FM Broadcast Limited Partnership; Frankfort, KY.	BPH-880303MD	
C. Allan Communications; Frankfort, KY.	BPH-880303ME	
D. David R. Roederer; Frankfort, KY.	BPH-880303MF	
E. S.A.Y Radio, Inc.; Frankfort, KY.	BPH-880303MI	
Issue Heading and Applicants		
1. Air Hazard, D		
2. Comparative, All applicants		
3. Ultimate, All applicants		
V		
A. Frank Digesu, Sr.; Meridianville, AL.	BPH-880126ME	90-150
B. Virginia Griffith; Meridianville, AL.	BPH-880127MN	
C. Meridian Broadcasting, Inc.; Meridianville, AL.	BPH-880128MK	
D. Grisham Broadcasting Company, Inc.; Meridianville, AL.	BPH-880128ML	
E. Linda L. Alt; Meridianville, AL.	BPH-880128MO	
F. William L. Malone; Meridianville, AL.	BPH-880128MR	
G. Brendell Broadcasting Corp.; Meridianville, AL.	BPH-880128MS	
H. KPI Communications, Inc.; Meridianville, AL.	BPH-880128MW	
Issue Heading and Applicants		
1. (See Appendix), C		
2. (See Appendix), C		
3. (See Appendix), C		
4. (See Appendix), C		
5. Air Hazard, C,F,G		
6. Comparative, All applicants		
7. Ultimate, All applicants		
VI		
A. Decatur Christian Radio Inc.; Decatur, IL.	BPH-880405MA	90-145
B. Howard G. Bill; Decatur, IL.	BPH-880407MU	
Issue Heading and Applicants		
1. Financial, B		
2. Comparative, A,B		
3. Ultimate, A,B		

2. Pursuant to section 309(e) of the Communications Act of 1934, as amended, the above applications have been designated for hearing in a consolidated proceeding upon the issues whose headings are set forth below. The text of each of these issues has been standardized and is set forth in its entirety under the corresponding headings at 51 FR 19347, May 29, 1986. The letter shown before each applicant's name, above is used below to signify whether the issue in question applies to that particular applicant.

3. If there is any non-standardized issue in this proceeding, the full text of the issue and the applicants to which it applies are set forth in an appendix to this Notice. A copy of the complete HDO in this proceeding is available for inspection and copying during normal business hours in the FCC Dockets Branch (room 230), 1919 M Street NW., Washington, DC. The complete text may also be purchased from the Commission's duplicating contractor, International Transcription Services, Inc., 2100 M Street NW., Washington, DC 20037. (Telephone (202) 857-3800).

W. Jan Gay,

Assistant Chief, Audio Services Division, Mass Media Bureau.

Appendix—(Meridianville, AL)

1. To determine whether Sonrise Management Services, Inc. is an undisclosed party to C's (MBI) application.

2. To determine whether C's (MBI) organizational structure is a sham.

3. To determine whether C (MBI) violated § 1.65 of the Commission's Rules, and/or lacked candor, by failing to report the designation of character issues against other applicants in which one or more of its shareholders has an ownership interest and

the dismissal of such applications with unresolved character issues pending.

4. To determine, from the evidence adduced pursuant to Issues 1–3 above, whether C (MBI) possesses the basic qualifications to be a licensee of the facilities sought herein.

[FR Doc. 90–9886 Filed 4–27–90; 8:45 am]

BILLING CODE 6712-01-M

FEDERAL RESERVE SYSTEM

Amsterdam-Rotterdam Bank N.V.; Formation of, Acquisition by, or Merger of Bank Holding Companies

The company listed in this notice has applied for the Board's approval under section 3 of the Bank Holding Company Act (12 U.S.C. 1842) and § 225.14 of the Board's Regulation Y (12 CFR 225.24) to become a bank holding company or to acquire a bank or bank holding company. The factors that are considered in acting on the applications are set forth in section 3(c) of the Act (12 U.S.C. 1842(c)).

The application is available for immediate inspection at the Federal Reserve Bank indicated. Once the application has been accepted for processing, it will also be available for inspection at the offices of the Board of Governors. Interested persons may express their views in writing to the Reserve Bank indicated for that application or to the offices of the Board of Governors. Any comment on an application that requests a hearing must include a statement of why a written presentation would not suffice in lieu of a hearing, identifying specifically any questions of fact that are in dispute and summarizing the evidence that would be presented at a hearing.

Comments regarding this application must be received not later than May 14, 1990.

A. **Federal Reserve Bank of New York** (William L. Rutledge, Vice President) 33 Liberty Street, New York, New York 10045:

1. *Amsterdam-Rotterdam Bank N.V.*, Amsterdam, The Netherlands; and Stichting Amro, Amsterdam, The Netherlands; to become a bank holding company by acquiring more than 50 percent of the voting shares of European American Bancorp, New York, New York, and thereby indirectly acquire European American Bank, New York, New York.

Board of governors of the Federal Reserve System, April 24, 1990.

Jennifer Johnson,

Associate Secretary of the Board.

[FR Doc. 90–9938 Filed 4–27–90; 8:45 am]

BILLING CODE 6210-01-M

DEPARTMENT OF HEALTH AND HUMAN SERVICES

Centers for Disease Control

[Announcement No. 023]

State-Based Diabetes Control Program

Introduction

The Centers for Disease Control (CDC) announces the availability of funds in Fiscal Year 1990 for new and competitive applications for cooperative agreements to conduct State-based diabetes control programs that address the prevention of visual loss due to diabetes, and one or more of the following diabetes complications: (1) Cardiovascular disease, (2) lower-extremity disease with consequent amputations, or (3) adverse outcomes of pregnancy.

Authority

This program is authorized by section 301(a) (42 U.S.C. 241(a)) and section 317(k)(3) (42 U.S.C. 247b(k)(3)) of the Public Health Service Act, as amended.

Eligible Applicants

Eligible applicants are the official public health agencies of States, the District of Columbia, American Samoa, the Commonwealth of Puerto Rico, the Virgin Islands, the Federated States of Micronesia, Guam, the Northern Mariana Islands, the Republic of the Marshall Islands, and the Republic of Palau.

Availability of Funds

Approximately $4.8 million will be available in Fiscal Year 1990 to support approximately 23 to 25 cooperative agreements. Awards will range from $100,000 to $300,000, with an average award of $187,500. It is expected that the awards will begin on or about September 1, 1990. Awards will be made for an anticipated 12-month budget period within a 1- to 3-year project period. Funding estimates outlined above may vary and are subject to change. Continuation awards within the project period will be made on the basis of satisfactory progress and availability of funds. Requests for direct assistance in lieu of cash will be considered.

Purpose

The purpose of this program is to provide financial and programmatic assistance to State-based diabetes programs to ensure that persons with diabetes who are at high risk for diabetic complications are identified, entered into the health care system, and receive ongoing preventive care and treatment, including patient education. Applicants approved to receive assistance through this program shall ensure implementation of programs designed to reduce visual loss due to diabetic eye disease. In addition to this required program element, recipients shall also plan and implement interventions designed to reduce morbidity and mortality due to one or more of the three following complications of diabetes: (1) Cardiovascular disease, (2) lower-extremity disease with consequent amputation, and (3) adverse outcomes of pregnancy. These programs should be designed to primarily impact on the health care system (broadly defined) and to result in permanent change in this system that will ensure continuation of morbidity reduction activities, including patient education, beyond the project period covered by this application. Because of the higher prevalence of diabetes in certain population groups, programs should place particular emphasis on the care of populations at high risk for excessive morbidity and mortality due to diabetic complications, including minorities, the elderly, and medically underserved persons.

Program Requirements

1. Recipient Activities

Applicants must address the following morbidity reduction activities for diabetic eye disease and one or more of the following complications: (1) Cardiovascular disease, (2) lower-extremity disease or (3) adverse outcomes of pregnancy. If the applicant has compelling reasons for excluding any of the specified activities for a complication, a brief justification is required.

a. For objectives related to morbidity reduction:

(1) Develop measurable, time-related process and morbidity reduction objectives for the prevention and treatment of visual loss due to diabetic eye disease and for one or more of the following diabetic complications: (1) Cardiovascular disease, (2) lower-extremity disease and (3) adverse outcomes of pregnancy.

(2) Develop a system for ongoing program monitoring and evaluation, and apply the results to the management of the program.

(3) For the prevention of visual loss due to diabetes (the required element of the program):

(a) Develop strategies for disease intervention at the community level that address the prevention and treatment of visual loss due to diabetes and

demonstrate progress toward statewide implementation during the project period.

(b) Ensure that providers participating in the program examine high-risk diabetic patients by techniques suitable to detect retinopathy and macular edema.

(c) Ensure that examinations also include acuity testing, tonometry, assessment of lens opacity, and blood pressure measurement; and that specific patient education about diabetic eye care is provided.

(4) For the prevention and treatment of cardiovascular disease among diabetic persons (if selected):

(a) Ensure that complication-specific patient education related to the prevention of cardiovascular disease be provided by participating providers to all of their diabetic patients and that the patient education includes risk education information such as hypertension control, lipid control, smoking cessation, weight reduction and the importance of regular exercise. Recommendations related to this requirement are contained in the consensus statement, "Role of Cardiovascular Risk Factors in Prevention and Treatment of Macrovascular Disease in Diabetes", published by the American Diabetes Association in *Diabetes Care*, Vol. 13, Suppl. 1, January 1990.

(b) Ensure that the blood pressures of persons with diabetes are measured at each visit to providers participating in the program (with such measurements being taken no less than annually) and that hypertension is evaluated and treated in accordance with the recommendations of The 1988 Report of the Joint National Committee on Detection, Evaluation, and Treatment of High Blood Pressure.

(c) Ensure that programs exist so that every year in adults and every 2 years in children, lipids (total and HDL cholesterol, and triglyceride levels) are measured in the fasting state, and, where appropriate, treatment be implemented in accordance with the Report of the Expert Panel on Detection, Evaluation and Treatment of High Blood Cholesterol in Adults.

(d) Ensure that smoking behaviors are reviewed, and that referrals to smoking cessation programs are made when indicated.

(e) Ensure that providers participating in the program promote adherence to cardiovascular risk reduction measures such as weight reduction and exercise programs.

(5) For the prevention and treatment of diabetes related lower-extremity disease (if selected):

(a) Ensure that programs exist so that diabetic persons at high risk for lower-extremity amputations have access to appropriate examinations, diagnosis, treatment, and patient education about diabetic foot care.

(b) Ensure that participating providers examine the feet of diabetic patients during each visit, with such visits no less than annually in all risk groups, and that efforts be made to obtain third party reimbursement for appropriate footwear for high-risk diabetic patients.

(6) For the prevention of adverse outcomes of diabetic pregnancy (if selected, applicant may choose to address either pre-existing diabetes and pregnancy (a and b) or gestational diabetes (c and d) or both):

(a) Ensure that diabetic women of childbearing age in the targeted communities are referred for preconception counseling and prenatal management, with particular attention to normal blood glucose levels prior to conception.

(b) Ensure that all pregnant diabetic women in the targeted communities are managed as high-risk pregnant patients and receive appropriate treatment, including patient education, and maintain normal blood glucose levels throughout gestation.

(c) Ensure that appropriate screening and follow-up for gestational diabetes is being carried out by all participating providers.

(d) Develop strategies, in cooperation with other interested organizations and health care agenices, for the periodic follow-up of women with gestational diabetes to educate them about risk reduction measures to decrease the risk of overt diabetes.

b. For integration of diabetes control program elements into the health care delivery system at the community level:

(1) Select communities for implementation of program interventions, basing selection on the potential for successfully reducing excess morbidity. While initial efforts may focus on selected communities, expansion of program activities should occur during the project period. An ultimate goal would be to provide programs statewide. Plans for program expansion should be specified.

(2) Enlist the participation of key agencies, organizations, and health care providers to build consensus and successfully carry out programs in the targeted communities and coordinate the activity of all participating parties. Written indication of cooperation of other organizations should be provided when possible.

(3) Select or develop protocols and guidelines in cooperation with the CDC and other participating organizations for implementation of public health interventions designed to reduce morbidity resulting from the targeted diabetic complications. Protocols and guidelines should be consistent with the recommendations of The guide for Primary Care Practitioners.

(4) Utilize community resoruces for diagnosis, treatment, and patient and professional education to achieve program goals and objectives. Funds provided through this cooperative agreement may not be used to pay for treatment, nor is direct provision of patient care by the program staff encouraged.

(5) Develop and implement strategies, in cooperation with the CDC and other participating organizations, for outreach to high-risk and underserved populations within the targeted communities, especially minority persons.

(6) Ensure that comprehensive patient education is provided to high-risk patients, and that education about the prevention of diabetes complications is included in the general education provided persons with diabetes in the targeted communities. Patient education programs should be consistent with the recommendations of the CDC—State Diabetes Control Program Patient Education Guidelines.

(7) Ensure that professional education relevant to the prevention of diabetic complications is provided to appropriate health care providers within the targeted communities. Cooperation with other organizations is encouraged in these activities. Professional education programs should be consistent with the recommendations of the CDC—State Diabetes Control Program Professional Education Guidelines.

c. For development and maintenance of the capacity of the program to identify high-risk populations, define needs, and plan future program development:

(1) Provide a capable and trained staff to carry out the required tasks of the program.

(2) Develop and maintain a program advisory group that advises the program on strategies and future direction through consensus-building activities.

(3) Develop and adopt, during the project period, a long-range, statewide plan for diabetes control with morbidity and mortality reduction goals and objectives that reflect a consensus of the State's medical and public health communities and which are consistent with the draft Year 2000 Objectives for the Nation. This plan should also describe strategies for continuing the

program in future years with decreasing dependency upon federal financial assistance.

(4) Develop a system, in cooperation with CDC, to monitor and document the impact of the program on the health care delivery system and the health status of persons with diabetes. These activities should utilize existing data source systems within the State such as hospital discharge records, blindness registries, and birth defect monitoring systems, and should increase in size and scope during the project period.

2. Centers for Disease Control Activities

a. Develop and disseminate public health guidelines for the provision and treatment of eye disease, cardiovascular disease, lower-extremity disease, and adverse outcomes of pregnancy among diabetic persons that can be applied in a variety of settings within the health care system.

b. Collaborate with State-based programs in obtaining and maintaining the cooperation of other private, public, voluntary, and governmental organizations in program-related activities.

c. Collaborate in the development of surveillance and data systems and assist the States in the analysis and evaluation of data and in the application of the data to program management and development. (Projects funded through a cooperative agreement that involve data collection from 10 or more respondents will be subject to review under the Paperwork Reduction Act.)

d. Collaborate in the planning and development of screening, referral, tracking, and monitoring components of the State-based programs.

e. Collaborate in the development of patient and professional education components of the State-based programs.

f. Communicate the results of diabetes research relevant to the prevention of diabetes complications to the State-based programs and collaborate in the integration of those results into the implementation of the programs.

Evaluation Criteria

1. The initial application for the project period will be reviewed by a CDC-convened objective review committee. Both the feasibility and scientific soundness of the proposal will be carefully reviewed. Plans for program expansion will be important. Evaluation will be based on the quality of the applicant's proposal to address the following criteria:

a. The consistency of the objectives of the work plan with the stated morbidity reduction purpose of the cooperative agreement. (35%)

(1) Program work plan.

(2) Plans for a system for ongoing program monitoring and evaluation.

(3) Interventions for the prevention of visual loss due to diabetes (the required element of the program):

(a) Plans for disease intervention at the community level.

(b) Techniques to be utilized to detect retinopathy and macular edema.

(c) Acuity testing, tonometry, assessment of lens opacity, blood pressure measurement, and patient education about diabetic eye care.

(4) Interventions for the prevention and treatment of cardiovascular disease among diabetic persons (if selected):

(a) Patient education related to the prevention of cardiovascular disease.

(b) Measurement of blood pressures and evaluation and treatment of hypertension.

(c) Measurement of lipids for diabetic patients and treatment when indicated.

(d) Review of smoking behaviors among diabetic patients and utilization of smoking cessation programs.

(e) Promotion of adherence to cardiovascular risk reduction measures such as weight reduction and exercise programs.

(5) Interventions for the prevention and treatment of diabetes related lower-extremity disease (if selected):

(a) Access to appropriate examination, diagnosis, treatment, and patient education for diabetic persons at high risk for lower-extremity amputation.

(b) Examination of the feet of diabetic patients by participating providers and efforts to obtain third-party reimbursement for appropriate footwear for high-risk diabetic patients.

(6) Interventions for the prevention of adverse outcomes of diabetic pregnancy (if selected, for either pre-existing diabetes and pregnancy of gestational diabetes or both):

(a) Preconception counseling for women of childbearing age.

(b) Management of pregnant diabetic women as high-risk pregnant patients and appropriate treatment, including patient education.

(c) Screening and follow-up for women with gestational diabetes.

(d) Periodic follow-up, after delivery, of women with gestational diabetes to educate them about risk reduction measures to decrease the risk of overt diabetes.

b. The quality of plans for the integration of diabetes control program elements into the health care delivery system at the community level. (30%)

(1) Selection of communities for implementation of program interventions.

(2) Participation of key agencies, organizations, and health care providers to build consensus and successfully carry out programs.

(3) Protocols and guidelines for implementation of interventions designed to reduce morbidity.

(4) Utilization of resources for diagnosis, treatment, and patient and professional education available within the targeted communities.

(5) Development and implementation of strategies for outreach to high-risk and underserved populations.

(6) Provision of comprehensive patient education programs to high-risk diabetic patients and education about the prevention of diabetes complications for diabetic persons in the targeted communities.

(7) Provision of professional education relevant to the diabetes control program to health care providers.

c. The quality of plans for the development and maintenance of the capacity of the program to identify high-risk populations, define needs, and plan future program development. (20%)

(1) Development and maintenance of a program advisory group to advise the program on strategies and future direction through consensus-building activities.

(2) Adoption, or progress toward adoption, of a long-range, statewide plan for diabetes control.

(3) Development of a system to monitor and document the impact of the program on the health care delivery system and the health status of persons with diabetes.

d. A capable and trained staff to carry out the required tasks of the programs. (15%)

e. The extent to which the budget is reasonable and consistent with the intended use of cooperative agreement funds and includes evidence of State's commitment to the program by the application of financial and/or in kind contributions from non-federal sources to activities of the proposed program. (not weighted)

2. Continuation awards within the project period (second and third years) will be made on the basis of the following criteria:

a. The availability of funds.

b. The extent to which accomplishments indicate that the applicant is meeting the stated objectives of the program, including expansion of both programmatic and surveillance activities.

c. The consistency of the objectives for the new budget period with the purpose of the cooperative agreement, and the extent to which these objectives are realistic, specific, and measurable.

d. The extent to which the methods described will clearly lead to achievement of these objectives.

e. Progress toward adoption of a long-range State plan for diabetes control and evidence of decreasing dependency on federal funds for essential program components.

f. The extent to which the budget request is justified, reasonable and consistent with the intended use of cooperative agreement funds.

Executive Order 12372 Review

Applications are subject to review as governed by Executive Order 12372, entitled Intergovernmental Review of Federal Programs (60-day review).

Catalog of Federal Domestic Assistance Number

The Catalog of Federal Domestic Assistance number is 13.988.

Application Submission and Deadline

A signed original and two copies of the application (PHS Form 5161-1) must be submitted to Candice Nowicki, Grants Management Officer, Grants Management Branch, Procurement and Grants Office, Centers for Disease Control, 255 East Paces Ferry Road, NE, Room 300, Atlanta, Georgia 30305, on or before May 31, 1990.

1. *Deadline:* To meet the deadline, applications must either:

a. Be received at the above address on or before the deadline date, or

b. Be sent on or before May 31, 1990, and received in time for submission to the independent review group. (Applicant should request a legibly dated U.S. Postal Service postmark or obtain a legibly dated receipt from a commercial carrier or U.S. Postal Service. Private metered postmarks will not be acceptable as proof of timely mailing.)

2. *Late Applications:* Applications that do not meet the above criteria are considered late applications. Late applications will not be considered in the current competition and will be returned to the applicant.

Where To Obtain Additional Information

Information on application procedures, copies of application forms, and other material may be obtained from Marsha D. Driggans, Grants Management Specialist, Grants Management Branch, Procurement and Grants Office, Centers for Disease Control, 255 East Paces Ferry Road, NE, Room 300, Atlanta, Georgia 30305, (404) 842-6575 or FTS 236-6575.

Programmatic assistance may be obtained from Neal Sprick, Division of Diabetes Translation, Center for Chronic Disease Prevention and Health Promotion, Centers for Disease Control, MS F48, Atlanta, Georgia 30333, (404) 639-1784 or FTS 236-1784.

Dated: April 23, 1990.

Robert L. Foster,

Acting Director, Office of Program Support, Centers for Disease Control.

[FR Doc. 89-9963 Filed 4-27-89; 8:45 am]

BILLING CODE 4160-18-M

Food and Drug Administration

Vita Plus Corp.; Withdrawal of Approval of NADA

AGENCY: Food and Drug Administration, HHS.

ACTION: Notice.

SUMMARY: The Food and Drug Administration (FDA) is withdrawing approval of a new animal drug application (NADA) held by Vita Plus Corp. The NADA provides for use of a tylosin Type A medicated article for making a Type C medicated swine feed. The firm requested withdrawal of approval of the NADA.

EFFECTIVE DATE: May 10, 1990.

FOR FURTHER INFORMATION CONTACT: Mohammad I. Sharar, Center for Veterinary Medicine (HFV-216), Food and Drug Administration, 5600 Fishers Lane, Rockville, MD 20857, 301-443-4093.

SUPPLEMENTARY INFORMATION: Vita Plus Corp., 1508 West Badger Rd., P.O. Box 9126, Madison, WI 53715-0126, is the sponsor of NADA 97-287, originally approved November 4, 1974, for manufacture of a tylosin Type A medicated article. The sponsor requested withdrawal of approval of the NADA by letters of July 13, 1987, and October 24, 1989, because the firm no longer manufactures the product.

Therefore, under authority delegated to the Commissioner of Food and Drugs (21 CFR 5.10), and redelegated to the Center for Veterinary Medicine (21 CFR 5.84), and in accordance with § 514.115 Withdrawal of approval of applications (21 CFR 514.115), notice is given that approval of NADA 97-287 and all supplements thereto is hereby withdrawn, effective May 10, 1990.

In a final rule published elsewhere in this issue of the **Federal Register**, FDA is amending 21 CFR 510.600(c) (1) and (2) and 556.625(b)(20) to reflect withdrawal of the approval.

Dated: April 23, 1990.

Gerald B. Guest,

Director, Center for Veterinary Medicine.

[FR Doc. 90-9933 Filed 4-27-90; 8:45 am]

BILLING CODE 4160-01-M

[Docket No. 90D-0088]

Guideline for Collection of Blood or Blood Products from High Risk Donors with Postitive Tests for Infectious Disease Markers; Availability

AGENCY: Food and Drug Administration, HHS.

ACTION: Notice.

SUMMARY: The Food and Drug Administration (FDA) is announcing the availability of a guideline for collection of blood or blood products from high risk donors with positive tests for infectious disease markers. The guideline will assist manufacturers in preparing a license amendment to permit collection of plasma for special purposes from high risk donors.

ADDRESSES: Submit written requests for single copies of the guideline for collection of blood and blood products from high risk donors with positive tests for infectious disease markers to the Congressional and Public Affairs Staff (HFB-140). Food and Drug Administration, Park Bldg., rm. 158, 5600 Fishers Lane, Rockville, MD 20857. Send two self-addressed adhesive labels to assist that office in processing your requests. Submit written comments on the guideline to the Dockets Management Branch (HFA-305), Food and Drug Administration, Rm. 4-62, 5600 Fishers Lane, Rockville, MD 20857. Requests and comments should be identified with the docket number found in brackets in the heading of this notice. Copies of the guideline and received comments are available for public examination in the Dockets Management Branch between 9 a.m. and 4 p.m., Monday through Friday.

FOR FURTHER INFORMATION CONTACT: JoAnn M. Minor, Center for Biologics Evaluation and Research (HFB-130), Food and Drug Administration, 8800 Rockville Pike, Bethesda, MD 20892, 301-295-8188.

SUPPLEMENTARY INFORMATION: FDA is announcing the availability of a guideline to provide manufacturers with procedures for collection and processing of blood products from high risk donors.

The guideline was sent to all blood establishments preparing products from donors known to have positive tests for infectious disease markers by a letter dated October 26, 1989. This guideline supersedes the March/August 1981 recommended procedures for the collection of Source Plasma from hepatitis B surface antigen (HBsAg) reactive donors sent to each licensed plasma collecting facility by a letter dated August 28, 1981. The guideline also provides information regarding the collection of blood products containing infectious agents other than hepatitis, e.g., the collection of anti-human immunodeficiency virus type 1 (HIV-1) positive plasma for research. This guideline will assist licensed manufacturers in preparing a license amendment when requesting an exemption under 21 CFR 640.120 to permit collection of plasma for special purposes from donors known to have positive tests for infectious disease markers or known risk factors for HIV-1 infection. Establishments currently having approval for an exemption under § 640.120 should review their current procedures in light of this guideline and determine if a license amendment would be appropriate.

Section 10.90(b) (21 CFR 10.90(b)) provides for use of guidelines to establish procedures of general applicability that are not legal requirements but are acceptable to the agency. A person who follows a guideline can be assured that his or her conduct will be acceptable to the agency. A person may also choose to use alternative procedures even though they are not provided for in the guideline. A person who chooses to do so may discuss the matter further with the agency to prevent an expenditure of money and effort for work that the agency may later determine to be unacceptable. Therefore, interested persons are encouraged to use this opportunity to submit comments on the guideline if they have suggestions.

Interested persons may submit written comments on the guideline to the Dockets Management Branch (address above). Such comments will be consistent in determining whether further amendments to, or revisions of, this guideline are warranted. Two copies of any comments are to be submitted, except that individuals may submit one copy.

Dated: April 20, 1990.

Ronald G. Chesemore,

Associate Commissioner for Regulatory Affairs.

[FR Doc. 90-9934 Filed 4-27-90; 8:45 am]

BILLING CODE 4160-01-M

[Docket No. 90P-0114]

Sour Cream Deviating From Identity Standard; Temporary Permit for Market Testing

AGENCY: Food and Drug Administration, HHS.

ACTION: Notice.

SUMMARY: The Food and Drug Administration (FDA) is announcing that a temporary permit has been issued to The Kroger Co. to market test a product designated as "lite sour cream" that deviates from the U.S. standard of identity for sour cream (21 CFR 131.160). The purpose of the temporary permit is to allow the applicant to measure consumer acceptance of the product.

DATES: This permit is effective for 15 months, beginning on the date the food is introduced or caused to be introduced into interstate commerce, but not later than July 30, 1990.

FOR FURTHER INFORMATION CONTACT: Shellee A. Davis, Center for Food Safety and Applied Nutrition (HFF—414), Food and Drug Administration, 200 C St. SW., Washington, DC 20204, 202-485-0106.

SUPPLEMENTARY INFORMATION: In accordance with 21 CFR 130.17 concerning temporary permits to facilitate market testing of foods deviating from the requirements of the standards of identity promulgated under section 401 of the Federal Food, Drug, and Cosmetic Act (21 U.S.C. 341), FDA is giving notice that a temporary permit has been issued to The Kroger Co., 1014 Vine St., Cincinnati, OH 45202.

The permit covers limited interstate marketing tests of a product that deviates from the U.S. standard of identity for sour cream in 21 CFR 131.160 in that: (1) The fat content of the product is reduced from 18 percent to 9 percent, and (2) sufficient vitamin A palmitate is added in a suitable carrier to ensure that a 2-tablespoon serving of the product contains 4 percent of the U.S. Recommended Daily Allowance for vitamin A. The product meets all requirements of the standard with the exception of these deviations. The purpose of the variation is to offer the consumer a product that is nutritionally equivalent to sour cream but contains fewer calories and less fat.

For the purpose of this permit, the name of the product is "lite sour cream." The principal display panel of the label must include the statements "reduced calories" and "reduced fat" following the name. In addition, the label must bear the comparative statements "⅓ less calories" and "50% less fat than regular sour cream".

The product complies with the reduced calorie labeling requirements in 21 CFR 105.66(d). In accordance with FDA's current views, reduced fat food labeling is acceptable because there is at least a 50-percent reduction in the fact content of the product. The information panel of the label will bear nutrition labeling in accordance with 21 CFR 101.9.

This permit provides for the temporary marketing of 1.25 million pounds of the test product. The product will be manufactured at Crossroad Farms Dairy, Indianapolis, IN 46206; Heritage Farms Dairy, Murfreesboro, TN 37133; Michigan Dairy, Livonia, MI 48150; Tamarack Farms Dairy, Newark, OH 43093; Westover Dairy, Lynchburg, VA 24505; Winchester Farms Dairy, Winchester, KY 40391; and Vandervoort Dairy, Ft. Worth, TX 76161; and distributed in Alabama, arkansas, Georgia, Illinois, Indiana, Kentucky, Louisiana, Michigan, Mississippi, Missouri, North Carolina, Ohio, South Carolina, Tennessee, Texas, Virginia, and West Virginia.

Each of the ingredients used in the food must be stated on the label as required by the applicable sections of 21 CFR part 101. This permit is effective for 15 months, beginning on the date the food is introduced or caused to be introduced into interstate commerce, but not later than July 30, 1990.

Dated: April 11, 1990.

Fred R. Shank,

Director, Center for Food Safety and Applied Nutrition.

[FR Doc. 90-9931 Filed 4-27-90; 8:45 am]

BILLING CODE 4160-01-M

[Docket No. 90P-0127]

Sour Cream Deviating From Identity Standard; Temporary Permit for Market Testing

AGENCY: Food and Drug Administration, HHS.

ACTION: Notice.

SUMMARY: The Food and Drug Administration (FDA) is announcing that a temporary permit has been issued to Giant Food, Inc., to market test a product designated as "light sour cream" that deviates from the U.S. standard of identity for sour cream (21 CFR 131.160). The purpose of the temporary permit is to allow the applicant to measure consumer acceptance of the product.

DATES: This permit is effective for 15 months, beginning on the date the food is introduced or caused to be introduced into interstate commerce, but not later than July 30, 1990.

FOR FURTHER INFORMATION CONTACT: Shellee A. Davis, Center for Food Safety and Applied Nutrition (HFF-414), Food and Drug Administration, 200 C Street SW., Washington, DC 20204, 202-485-0343.

SUPPLEMENTARY INFORMATION: In accordance with 21 CFR 130.17 concerning temporary permits to facilitate market testing of foods deviating from the requirements of the standards of identity promulgated under seciton 401 of the Federal Food, Drug, and Cosmetic Act (21 U.S.C. 341), FDA is giving notice that a temporary permit has been issued to Giant Food, Inc., Box 1804, Washington, DC 20013.

The permit covers limited interstate marketing tests of a product that deviates from the U.S. standard of identity for sour cream in 21 CFR 131.160 in that: (1) The fat content of the product is reduced from 18 percent to 9 percent, and (2) sufficient vitamin A palmitate is added in a suitable carrier to ensure that a 2-tablespoon serving of the product contains 4 percent of the U.S. Recommended Daily Allowance for vitamin A. the product meets all requirements of the standard with the exception of these deviations. The purpose of the variation is to offer the consumer a product that is nutritionally equivalent to sour cream but contains fewer calories and less fat.

For the purpose of this permit, the name of the product is "light sour cream." The principal display panel of the label must include the statements "reduced calories" and "reduce fat" following the name. In addition, the label must bear the comparative statements "42 percent fewer calories than sour cream" and "50 percent less fat than sour cream."

The product complies with the reduced calorie labeling requirements in 21 CFR 105.66(d). In accordance with FDA's current views, reduced fat food labeling is acceptable because there is at least a 50-percent reduction in the fact content of the product. The information panel of the label will bear nutrition labeling in accordance with 21 CFR 101.9

This permit provides for the temporary marketing of 120,000 pounds of the test product. The product will be manufactured at Giant Food, Inc., Landover, MD 20785, and distrubuted in Maryland, Virginia, and the District of Columbia.

Each of the ingredients used in the food must be stated on the label as required by the applicable sections of 21 CFR part 101. This permit is effective for 15 months, beginning on the date the food is introduced or caused to be introduced into interstate commerce, but not later than July 30, 1990.

Dated: April 17, 1990.

Fred R. Shank,

Director, Center for Food Safety and Applied Nutrition.

[FR Doc. 90-9932 Filed 4-27-90; 8:45 am]

BILLING CODE 4160-01-M

Public Health Service

President's Council on Physical Fitness and Sports

AGENCY: Office of the Assistant Secretary for Health, HHS.

ACTION: Notice of meeting.

SUMMARY: This notice sets forth the schedule and proposed agenda of a forthcoming meeting of the President's Council on Physical Fitness and Sports. This notice also describes the functions of the Council. Notice of this meeting is required under the Federal Advisory Committee Act.

DATES: May 1, 1990, 1-5 p.m.

ADDRESSES: Washington Hilton Hotel, Military Room, 1919 Connecticut Avenue NW., Washington, DC.

FOR FURTHER INFORMATION CONTACT: Wilmer D. Mizell, Executive Director, President's Council on Physical Fitness and Sports, 450 5th Street NW., Suite 7103, Washington, DC., 202/272-3421.

SUPPLEMENTARY INFORMATION: The President's Council on Physical Fitness and Sports operates under Executive Order #12345, and subsequent orders. The functions of the Council are: (1) To advise the President and Secretary concerning progress made in carrying out the provisions of the Executive Order and recommending to the President and Secretary, as necessary, actions to accelerate progress; (2) advise the Secretary on matters pertaining to the ways and means of enhancing opportunities for participation in physical fitness and sports actions to extend and improve physical activity programs and services.

The Council will hold this meeting to apprise the members of the national program of physical fitness and sports, to report on ongoing Council programs, and to plan for future directions. Because of the need to convene the Council as soon as possible so that it may contribute its expertise to government involvement in the National Physical Fitness Month kickoff and future programs, the usual requirement of advance notice has not been met.

Dated: April 24, 1990.

Wilmer D. Mizell,

Executive Director, President's Council on Physical Fitness and Sports.

[FR Doc. 90-9891 Filed 4-27-90; 8:45 am]

BILLING CODE 4160-17-M

DEPARTMENT OF THE INTERIOR

Fish and Wildlife Service

Receipt of Applications for Permits

The following applicants have applied for permits to conduct certain activities with endangered species. This notice is provided pursuant to Section 10(c) of the Endangered Species Act of 1973, as amended (16 U.S.C. 1531, *et seq.*):

PRT-747514

Applicant: Philadelphia Zoological Garden, Philadelphia, PA

The applicant requests a permit to export one captive born male jaguarundi (*Felis yagouaroundi tolteca*) to the Belize Zoo, Belize, for captive breeding purposes. The animal will be purchased from the Houston Zoo, Houston, Texas, for export to Belize.

PRT-747901

Applicant: Philadelphia Zoological Garden, Philadelphia, PA

The applicant requests a permit to import one wild-caught female jaguarundi (*Felis yagouaroundi fossata*) from the Belize Zoo, Belize, for display and breeding purposes.

PRT-747895

Applicant: Riverbanks Zoological Park, Columbia, SC

The applicant requests a permit to import two pairs of captive hatched Rothschild's starlings (*Leucopsar rothschild*) from the Hong Kong Zoological and Botanical Gardens for propagation and display purposes.

PRT-747894

Applicant: KEMRON Environmental Services, Atlanta, GA

The applicant requests a permit to take (mist-net, identify and release) Indiana bats (*Myotis sodalis*) and gray bats (*Myotis grisescens*) in Breckinridge, Bullitt and Hardin Counties, Kentucky, to assess the impacts of a proposed pipeline on these two species.

PRT-748100

Applicant: Lowry Park Zoological Garden, Tampa, FL

The applicant requests a permit to purchase one female American crocodile (*Crocodylus acutus*) from Mr. Bill Page, Sundury, Ohio, for breeding and display purposes.

PRT-747931

Applicant: San Diego Zoo, San Diego, CA

The applicant requests a permit to import one male Central American tapir (*Tapirus bairdii*) of wild origin from the La Aurora Zoo, Gautemala City, Guatemala for the purpose of captive-propagation.

PRT-747919

Applicant: George Carden Circus International, Springfield, MO

The applicant requests a permit to purchase in interstate commerce one female Asian elephant (*Elephas maximus*) from Franz Czeisler, Sarasota, Florida for educational display. This Asian elephant will be exported and imported for similar displays in the future.

Documents and other information submitted with these applications are available to the public during normal business hours (7:45 am to 4:15 pm) in room 430, 4401 N. Fairfax Dr., Arlington, VA 22201, or by writing to the Director, U.S. Fish and Wildlife Service, Office of Management Authority, 4401 N. Fairfax Drive, room 430, Arlington, VA 22201.

Interested persons may comment on any of these applications within 30 days of the date of this publication by submitting written views, arguments, or data to the Director at the above address. Please refer to the appropriate PRT number when submitting comments.

Dated: April 24, 1990.

Karen Willson,

Acting Chief, Branch of Permits, U.S. Office of Management Authority.

[FR Doc. 90-9955 Filed 4-27-90; 8:45 am]

BILLING CODE 4310-55-M

Bureau of Land Management

[CA-060-0-4410-12]

Review of California Desert Plan; Correction

AGENCY: Bureau of Land Management, Interior.

ACTION: Correction and amendment notice.

SUMMARY: In the Federal Register of January 18, 1990 (Vol. 55, p.1733), a Notice of Correction and amendment was published. This notice amends, clarifies, and corrects that notice. Because of the addition of two amendments and expressed interest, the comment period on the new as well as the prior proposed amendments is extended an additional 30 days until May 30, 1990.

The two new amendments are: (1) Adjust multiple-use classifications on public land in the California Desert Conservation to be consistent with guidelines for Multiple-Use Class L (limited use) within Categories 1 and 2 desert tortoise habitat; (2) prohibit competitive motorized vehicle events in Categories 1 and 2 desert tortoise habitat. Goals and criteria for Categories 1, 2 and 3 are given in Table 1, page 12, Desert Tortoise Habitat Management on the Public Lands: A Rangewide Plan (BLM, 1988).

The purpose of the public review period is to obtain comments and issues to be addressed in the Environmental Impact Statement. Failure to comment will not preclude or prevent participation in the review of the draft EIS, the availability of which will be noted in the Federal Register and through a news release.

The January 18th notice includes the following statement: "Written comments on the proposed three additional ACECs and proposed deletion of the four competitive race routes will be accepted from the public until February 22, 1990 days after the Desert Advisory Council meeting." That portion beginning with "days after the * * * Council meeting" was incorrectly included and should be stricken. And by this notice the February 22, 1990, date is hereby extended to May 30, 1990 as noted above.

Comments should be sent to the District Manager, Attn: 1989 Plan Amendments, California Desert District, 1695 Spruce Street, Riverside, California 92507.

FOR FURTHER INFORMATION CONTACT: Gerald E. Hillier, District Manager, Bureau of Land Management, California Desert District, 1695 Spruce Street, Riverside, California 92507.

H.W. Riecken,

Acting District Manager.

[FR Doc. 90-9966 Filed 4-27-90; 8:45 am]

BILLING CODE 4310-40-M

Minerals Management Service

Delegation of Royalty Management Authority to State of Texas

April 24, 1990.

AGENCY: Minerals Management Service (MMS), Interior.

ACTION: Notice of public hearing and request for comments.

SUMMARY: The Minerals Management Service (MMS) of the Department of the Interior hereby gives notice of a public hearing on a petition from the State of Texas for delegation of authority for royalty management activities. The petition was submitted pursuant to section 205 of the Federal Oil and Gas Royalty Management Act of 1982 (FOGRMA), 30 U.S.C. 1735 and 30 CFR part 229. Written comments from interested persons also will be accepted.

DATES: The public hearing will be held beginning at 9 a.m. on June 22, 1990. Written comments will be accepted by MMS on the petition through June 30, 1990.

ADDRESSES: The hearing will be held at the Texas General Land Office, 1700 North Congress Avenue, 8th Floor, Conference Room, Austin, Texas.

Written comments should be sent to the Minerals Management Service, Royalty Management Program, Office of State and Tribal Support Program, Attention: Mr. Todd R. McCutcheon, P.O. Box 25165, MS-3601, Denver, Colorado 80225.

FOR FURTHER INFORMATION CONTACT: Mr. Todd R. McCutcheon, Chief, Office of State and Tribal Support Program, Minerals Management Service, P.O. Box 25165, MS-3601, Denver, Colorado 80225, (303) 231-3340 or (FTS) 326-3340.

SUPPLEMENTARY INFORMATION: Section 205 of FOGRMA, authorizes the Secretary of the Interior to delegate to States certain audit, inspection, and investigation authority for oil and gas production on Federal and Indian leases. The MMS issued regulations implementing section 205 of FOGRMA at 30 CFR part 229, which defines the scope of authorities, which may be delegated to States and the standards for such delegation. Section 229.102 of the regulations requires that a public hearing(s) be held on a petition for delegation from a State to determine whether:

- The State has an acceptable plan for carrying out delegated responsibilities and if it is likely that the State will provide adequate resources to achieve the requirements of FOGRMA;
- The State has the ability to put in place a process within 60 days of the grant of delegation which will assure the Secretary that the functions to be delegated to the State can be effectively carried out;
- The State has demonstrated that it will effectively and faithfully administer the rules and regulations of the Secretary in accordance with the requirements at 30 U.S.C. 1735;
- The State's plan to carry out the delegated authority will be in accordance with MMS standards; and
- The State's plan to coordinate the delegated authority with MMS and the

Office of the Inspector General audit efforts to eliminate added burden on any lessee or group of lessees operating Federal or Indian oil and gas leases within the State.

The purpose of the subject hearing is to provide a public forum to discuss the State of Texas' written request for delegation of audit activities for oil and gas royalties with respect to Federal lands within the State. The State's written request for delegation will be available for public inspection at the hearing. Topics for discussion at the hearing include:

• The State's resources to be devoted to the delegated audit activity.

• The ability of the State to effectively and faithfully administer the rules and regulations of the Secretary under FOGRMA.

• Whether or not the delegation of authority will create an unreasonable burden on any lessee, with respect to the Federal and Indian lands within the State.

The presiding officer at the hearing will establish the procedures for conduct of the hearing. Any interested person may submit written comments on the petition, which will be accepted by MMS through June 30, 1990, at the address identified above.

Dated: April 24, 1990.

Donald T. Sant,

Deputy Associate Director for Valuation and Audit.

[FR Doc. 90-9967 Filed 4-27-90; 8:45 am]

BILLING CODE 4310-MR-M

National Park Service

Subsistence Resource Commission Meeting

AGENCY: National Park Service, Interior.

ACTION: Subsistence Resource Commission meeting.

SUMMARY: The Superintendent of Gates of the Arctic National Park and Preserve and the Chairperson of the Subsistence Resource Commission for Gates of the Arctic National Park announce a forthcoming meeting of the Subsistence Resource Commission for Gates of the Arctic National Park.

The following agenda items will be discussed:

(1) Introduction of commission members.
(2) Introduction of guests.
(3) Review of minutes from last meeting.
(4) Subsistence Hunting Plan issues:
  a. ANILCA guidelines,
  b. Eligibility,
  c. Access,
  d. Wiseman community concerns.
(5) Reports from Superintendent and state.
(6) Potential haul road opening—local concerns.
(7) Redraft recommendations and/or review rewrite.
(8) Old and new business.

DATES: The meeting will begin at 9 a.m. on Saturday, May 12, 1990 and conclude at 5 p.m. If road/airstrip conditions permit, the Saturday afternoon session will be conducted at the Jack Reakoff residence in Wiseman. The meeting will reconvene at 9 a.m. on Sunday, May 13, 1990 and conclude at 5 p.m.

ADDRESSES: The meeting will he held at Coldfoot Services, Inc., Coldfoot, Alaska via Fairbanks, Alaska.

FOR FURTHER INFORMATION CONTACT: Roger J. Siglin, Superintendent, Gates of the Arctic National Park and Preserve, P.O. Box 74680, Fairbanks, Alaska 99701. Phone (907) 456-0281.

SUPPLEMENTARY INFORMATION: The Subsistence Resource Commission is authorized under Title VIII, section 808, of the Alaska National Interest Lands Conservation Act, Public Law 96-487, and operates in accordance with the provisions of the Federal Advisory Committees Act.

Paul F. Haertel,

Acting Regional Director.

[FR Doc. 90-9900 Filed 4-27-90; 8:45 am]

BILLING CODE 4310-70-M

INTERSTATE COMMERCE COMMISSION

[Ex Parte No. 394 Sub-No. 3]

Cost Ratios for Recyclables—Compliance Procedures

AGENCY: Interstate Commerce Commission.

ACTION: Notice of postponement of procedural schedule for first annual proceeding to be conducted under the Commission's recyclable rate compliance regulations (49 CFR part 1145, published at 54 FR 42509, October 17, 1989).

SUMMARY: The procedural schedule set forth in the decision served February 22, 1990 (notice of decision published at 55 FR 6489, February 23, 1990) is postponed pending further order of the Commission. This is necessary to allow time for receipt and consideration of replies to a petition by participating railroads for postponement or cancellation of the procedural schedule.

FOR FURTHER INFORMATION CONTACT: Joseph H. Dettmar, (202) 275-7245. (TDD for hearing impaired: (202 275-1721).

SUPPLEMENTARY INFORMATION: Participating railroads petitioned April 12, 1990, for postponement or cancellation of the procedural schedule for the first annual proceeding to be conducted under the Commission's recyclable rate compliance regulations. The railroads' submissions under the current schedule are due May 1, 1990. The railroads contend that this date should be postponed until Commission-produced unit costs and revenues under the Uniform Railroad Costing System (URCS) are available. Alternatively, they propose that the currently scheduled proceeding be canceled in favor of treating the next scheduled proceeding (due, under the compliance regulations, to commence September 15) as the first annual proceeding.

Under the Commission's rules of practice (49 CFR 1104.13), other parties have 20 days to reply to the petition, or until May 2, 1990, 1 day later than the due date for the railroads' evidence under the procedural schedule. Thus, a postponement of the schedule is necessary to permit the replies to be received and considered.

After replies are received, the merits of the railroads' petition will be considered and a further order will be issued regarding the procedural schedule for the first annual proceeding.

This decision will not significantly affect the quality of the human environment or conservation of energy resources.

Decided: April 23, 1990.

By the Commission, Jane F. Mackall, Director, Office of Proceedings.

Noreta R. McGee,

Secretary.

[FR Doc. 90-9959 Filed 4-27-90; 8:45 am]

BILLING CODE 7035-01-M

[Ex Parte No. 388; Sub 10]

Intrastate Rail Rate Authority—Kansas

AGENCY: Interstate Commerce Commission.

ACTION: Notice of provisional certification.

SUMMARY: The State of Kansas has filed its application for recertification with the Commission. Pursuant to *State Intrastate Rail Rate Authority*, 5 I.C.C.2d 680, 685 (1989), the Commission provisionally recertifies the State of Kansas to regulate intrastate railroad rates, practices, and procedures. After completing its review, the Commission will issue a decision approving recertification or taking other appropriate action.

DATES: This provisional recertification will be effective on April 30, 1990.

FOR FURTHER INFORMATION CONTACT: Joseph H. Dettmar, (202) 275-7245. [TDD for hearing impaired: (202) 275-1721].

Decided: April 24, 1990.

By the Commission, Jane F. Mackall, Director, Office of Proceedings.

Noreta R. McGee,

Secretary.

[FR Doc. 90-9958 Filed 4-27-90; 8:45 am]

BILLING CODE 7035-01-M

Release of Waybill Data for Use by Ernst & Young; Board of Commissioners of the Port of New Orleans

The Commission has received a request from Ernst & Young, for permission to use certain data from the Commission's 1984 through 1988 ICC Waybill Sample. The data are requested for the purpose of assisting the Port of New Orleans develop a strategic rail plan. The overall study objective is to identify those actions that can be taken to enhance rail services at the Port and Maximize the advantages offered by the Port of New Orleans. The following fields from each are requested: Waybill Date, Number of Carloads, Commodity Code (STCC-HAZMAT), Actual Weight, Freight Revenue, Transit Charges, Miscellaneous Charges, Inter/Intra State Code, All Rail/Intermodal Code, Type Move (Import/export), Type Move Via Water, Substituted Truck for Rail, Shortline Miles, Stratum Identification Code, Subsample Code, Intermodal Equipment Flag, Reporting Railroad, Origin and Termination FSAC, Origin and Termination Railroad, All Bridge Railroads, Population Count, Stratum Count, Reporting Period Length, Number of Articulated Units, AAR Car Type, Mechanical Designation, Origin and Destination SPLC, STCC w/o Hazardous (49) Codes, All Bridge Railroad Alpha Codes, Junction Frequency, Expansion Factor, ICC Car Type, Expanded Carloads, Billed Weight in Tons, Expanded tons, Expanded Trailer/Container Count, Expanded Total Revenue, Total Distance, Origin and Destination State Alpha, Origin and Destination BEA, Origin and Destination FIPS Code, Origin and Destination Freight Area, and Origin and destination SMSA.

The Commission requires rail carriers to file waybill sample information if in any of the past three years they terminated on their lines; (1) 4,500 revenue carloads or (2) 5 percent of revenue carloads in any one State (49 C.F.R. Part 1244). From the waybill information, the Commission has developed a Public Use Waybill File that has statisfied the majority of all our waybill data requests while protecting the confidentiality of proprietary data submitted by the railroads. However, if confidential waybill data are requested, as in this case, we will consider releasing the data only after certain protective conditions are met and public notice is given. More specifically, under the Commission's current policy for handling waybill requests, we will not release any confidential waybill data until after: (1) Public notice is provided so affected parties have an opportunity to object and (2) certain requirements designed to protect the data's confidentiality are agreed to by the requesting party [Ex Parte No. 385 (Sub-No. 2), 52 FR 12415, April 16, 1987].

Accordingly, if any parties object to this request, they should file their objections (an original and 2 copies) with the Director of the Commission's Office of Transportation Analysis (OTA) within 14 calendar days of the publication of this notice. They should also include all grounds for objections to the full or partial disclosure of the requested data. The Director of OTA will consider these objections in determining whether to release the requested waybill data. Any parties who objected will be timely notified of the Director's decison.

Contact: James A. Nash, (202) 275-6864.

Noreta R. McGee,

Secretary.

[FR Doc. 90-9961 Filed 4-27-90; 8:45 am]

BILLING CODE 7035-01-M

[Docket No. AB-254 Sub-No. 1X]

Providence & Worchester Railroad Co.—Abandonment Exemption—in Providence County, RI

Applicant has filed a notice of exemption under 49 CFR 1152 Subpart F—*Exempt Abandonments* to abandon its 0.93-mile line of railroad between the grade crossing at Titus Street and the end of the line near Dexter Street, at Cumberland, Providence County, RI.

Applicant has certified that: (1) No local traffic has moved over the line for at least 2 years; (2) any overhead traffic on the line can be rerouted over other lines; and (3) no formal complaint filed by a user of rail service on the line (or a State or local government entity acting on behalf of such user) regarding cessation of service over the line either is pending with the Commission or with any U.S. District Court or has been decided in favor of the complainant within the 2-year period. The appropriate State agency has been notified in writing at least 10 days prior to the filing of this notice.

As a condition to use of this exemption, any employee affected by the abandonment shall be protected under *Oregon Short Line R. Co.—Abandonment—Goshen*, 360 I.C.C. 91 (1979). To address whether this condition adequately protects affected employees, a petition for partial revocation under 49 U.S.C. 10505(d) must be filed.

Provided no formal expression of intent to file an offer of financial assistance has been received, this exemption will be effective on May 30, 1990 (unless stayed pending reconsideration). Petitions to stay that do not involve environmental issues,[1] formal expressions of intent to file an offer of financial assistance under 49 CFR 1152.27(c)(2),[2] and trail use/rail banking statements under 49 CFR 1152.29 must be filed by May 10, 1990.[3] Petitions for reconsideration or requests for public use conditions under 49 CFR 1152.28 must be filed by May 21, 1990, with: Office of the Secretary, Case Control Branch, Interstate Commerce Commission, Washington, DC 20423.

A copy of any petition filed with the Commission should be sent to applicant's representative: Harry A. Snyder, Providence and Worchester Railroad Company, One Depot Square, P.O. Box 1490, Woonsocket, RI 02895.

If the notice of exemption contains false or misleading information, use of the exemption is void *ab initio*.

Applicant has filed an environmental report which addresses environmental or energy impacts, if any, from this abandonment.

The Section of Energy and Environment (SEE) will prepare an environmental assessment (EA). SEE will issue the EA by May 4, 1990. Interested persons may obtain a copy of the EA from SEE by writing to it (Room 3219, Interstate Commerce Commission, Washington, DC 20423) or by calling Elaine Kaiser, Chief, SEE at (202) 275-

---

[1] A stay will be routinely issued by the Commission in those proceedings where an informed decision on environmental issues (whether raised by a party or by the section of Energy and Environment in its independent investigation) cannot be made prior to the effecive date of the notice of exemption. *See Exemption of Out-of-Service Rail Lines*, 5 I.C.C.2d 377 (1989). Any entity seeking a stay involving environmental concerns is encouraged to file its request as soon as possible in order to permit this Commission to review and act on the request before the effective date of this exemption.

[2] *See Exempt. of Rail Abandonment—Offers of Finan. Assist.*, 4 I.C.C.2d 164 (1987).

[3] The Commission will accept a late-filed trail use statement so long as it retains jurisdiction to do so.

7684. Comments on environmental and energy concerns must be filed within 15 days after the EA becomes available to the public.

Environmental, public use, or trail use/rail banking conditions will be imposed, where appropriate, in a subsequent decision.

Decided: April 23, 1990.

By the Commission, Jane F. Mackall Director, Office of Proceedings.

Noreta R. McGee,

Secretary.

[FR Doc. 90-9962 Filed 4-27-90; 8:45 am]

BILLING CODE 7035-01-M

[Docket No. AB-254 (Sub. 2X)]

Providence and Worcester Railroad Co.—Abandonment Exemption—in Providence and Kent Counties, RI

Applicant has filed a notice of exemption under 49 CFR 1152 subpart F—Exempt Abandonments to abandon its 14.6-mile line of railroad between the connection with Amtrak's shore line at Amtrak surveying station 3157+12, at Providence, and the end of the line at milepost 14.6, at or near Coventry, in Providence and Kent Counties, RI.

Applicant has certified that: (1) No local traffic has moved over the line for at least 2 years; (2) any overhead traffic on the line can be rerouted over other lines; and (3) no formal complaint filed by a user of rail service on the line (or a State or local government entity acting on behalf of such user) regarding cessation of service over the line either is pending with the Commission or with any U.S. District Court or has been decided in favor of the complainant within the 2-year period. The appropriate State agency has been notified in writing at least 10 days prior to the filing of this notice.

As a condition to use of this exemption, any employee affected by the abandonment shall be protected under *Oregon Short Line R. Co.—Abandonment—Goshen*, 360 I.C.C. 91 (1979). To address whether this condition adequately protects affected employees, a petition for partial revocation under 49 U.S.C. 10505(d) must be filed.

Provided no formal expression of intent to file an offer of financial assistance has been received, this exemption will be effective on May 30, 1990 (unless stayed pending reconsideration). Petitions to stay that do not involve environmental issues,[1] formal expressions of intent to file an offer of financial assistance under 49 CFR 1152.27(c)(2),2 [2] and trail use/rail banking statements under 49 CFR 1152.29 must be filed by May 10, 1990.[3] Petitions for reconsideration or requests for public use conditions under 49 CFR 1152.28 must be filed by May 21, 1990, with: Office of the Secretary, Case Control Branch, Interstate Commerce Commission, Washington, DC 20423.

A copy of any petition filed with the Commission should be sent to applicant's representative: Harry A. Snyder, Providence and Worcester Railroad Company, One Depot Square, P.O. Box 1490, Woonsocket, RI 02895.

If the notice of exemption contains false or misleading information, use of the exemption is void *ab initio*.

Applicant has filed an environmental report which addresses environmental or energy impacts, if any, from this abandonment.

The Section of Energy and Environment (SEE) will prepare an environmental assessment (EA). SEE will issue the EA by May 4, 1990. Interested persons may obtain a copy of the EA from SEE by writing to it (Room 3219, Interstate Commerce Commission, Washington, DC 20423) or by calling Elaine Kaiser, Chief, SEE at (202) 275-7684. Comments on environmental and energy concerns must be filed within 15 days after the EA becomes available to the public.

Environmental, public use, or trail use/rail banking conditions will be imposed, where appropriate, in a subsequent decision.

Decided: April 3, 1990.

By the Commission, Jane F. Mackall, Director, Office of Proceedings.

Noreta R. McGee,

Secretary.

[FR Doc. 90-9830 Filed 4-27-90; 8:45 am]

BILLING CODE 7035-01-M

---

[1] A stay will be routinely issued by the Commission in those proceedings where an informed decision on environmental issues (whether raised by a party or by the Section of Energy and Environment in its independent investigation) cannot be made prior to the effective date of the notice of exemption. *See Exemption of Out-of-Service Rail Lines*, 5 I.C.C. 2d 377 (1989). Any entity seeking a stay involving environmental concerns is encouraged to file its request as soon as possible in order to permit this Commission to review and act on the request before the effective date of this exemption.

[2] *See Exempt. of Rail Abandonment—Offers of Finan. Assist.*, 4 I.C.C. 2d 164 (1987).

[3] The Commission will accept a late-filed trail use statement so long as it retains jurisdiction to do so.

[Ex Parte No. 346; Sub-No. 19B]

Boxcar Car Hire and Car Service—Exemption—Bangor and Aroostook Railroad Co.

AGENCY: Interstate Commerce Commission.

ACTION: Notice of institution of proceeding and request for comments.

SUMMARY: The Commission is requesting comments on a petition filed February 27, 1990, by Bangor and Aroostook Railroad Company (BAR). BAR seeks an exemption from the October 15, 1990 expiration date of provisions of the boxcar car hire rules [49 CFR 1039.14(c)]. The rules, as pertinent, exclude from the empty car mileage charge provisions boxcars owned or leased by unaffiliated Class II carriers such as BAR. BAR seeks waiver of the expiration date to preserve its exclusion.

DATES: Any person interested in participating in this proceeding as a party of record by filing and receiving written comments must file a notice of intent to do so by May 10, 1990. We will issue a service list of the parties of record shortly thereafter.

Petitioner will have 10 days after service of the service list to serve each party on the list with a copy of the petition. Initial written comments must be filed within 30 days after service of the service list. All parties will have 50 days after service of the service list to reply. The exact filing dates will be specified in the notice accompanying the service list. Comments must be served upon all parties of record.

ADDRESSES: An original and 10 copies of all notices of intent and comments must be sent to: Office of the Secretary, Case Control Branch, Attn: Ex Parte No. 346 (Sub-No. 19B), Interstate Commerce Commission, Washington, DC 20423.

In addition, one copy of all comments must be sent to all parties of record.

FOR FURTHER INFORMATION CONTACT: Joseph H. Dettmar, (202) 275-7245. [TDD for hearing impaired: (202) 275-1721.]

SUPPLEMENTARY INFORMATION: Under 49 CFR 1039.14(c), railroads are authorized among other things, to assess charges (up to 35 cents per mile) against boxcar owners for returning the cars to them empty. Alternatively, carriers may reclaim car hire payments from the boxcar owners after storing the empty cars for 72 hours. Boxcars owned or leased by Class III carriers and (for 4 years) unaffiliated Class II carriers (those not more than 50 percent owned by Class I carriers) are excluded from the applicability of these empty car

provisions.[1] However, the exclusion of unaffiliated Class II carriers expires October 15, 1990.

BAR is an unaffiliated Class II carrier, benefiting from the current exclusion. In its request to be exempted from the expiration provisions of the exclusion, it argues that: (1) It is operationally similar to a Class III carrier and should be regarded as a Class III carrier for purposes of the exclusion; (2) it cannot rely on connecting carriers as a source of car supply; (3) it lacks sufficient leverage to negotiate bilateral agreements; and (4) loss of the exclusion will jeopardize its car supply, reduce its car hire revenues, and weaken its ability to serve its customers. BAR also alleges that the Commission's reasons for treating Class II and Class III carriers differently under the exclusion have not been explained.

BAR's petition urges that, while it is a Class II carrier (it had 1989 operating revenues of $27.1 million), its geographical location and its traffic flow are unique when compared to other Class II carriers. Many Class II carriers participate primarily as overhead carriers with only a small amount of traffic (other than TOFC/COFC) originating or terminating on their lines. By contrast, BAR states it has little overhead or terminating traffic (6,142 carloads) compared to the traffic it originates (50,560 carloads in 1989). The absence of overhead or terminating traffic reduces BAR's sources of boxcars. BAR's petition further indicates that approximately 37 percent of its originated traffic requires clean, high quality boxcars (lumber and wood products; pulp, paper and allied products; and food and kindred products). BAR, as the most northern rail line in the contiguous 48 states, and the most eastern rail line in the country, claims to be isolated at one end of the national rail system, surrounded by Canada on three sides, and two of its three main line connecting carriers are Canadian roads. Customs regulations arguably limit BAR's ability to obtain boxcars from these carriers. BAR's only U.S. connection is the Maine Central Railroad Company (MEC), part of the Guilford Transportation Industries, Inc. MEC's boxcar traffic is much the same (paper and paper products) as BAR's and MEC allegedly has difficulty providing equipment to its own shippers. Under all of these circumstances, BAR claims it must own a disproportionately large fleet of boxcars (2,056 excluded boxcars as of January 1990), and without the exclusion would incur empty movement charges offsetting the car hire revenues it needs to maintain that fleet.

In response to BAR's petition, Consolidated Rail Corporation, CSX Transportation, Inc., General Electric Railcar Brae Services Corporation, Itel Rail Corporation, and Norfolk Southern Corporation filed a joint petition requesting the Commission to publish notice and request comments on BAR's petition. They contend that the relief sought will not only affect BAR but will also affect other carriers' obligations and that while BAR served all parties to the 1986 Boxcar proceeding, publication will ensure adequate notice to all interested persons.

Because of the widespread interest previously expressed in the car hire rules, and the implications of the requested exemption for BAR and other segments of the rail industry, we invite comments on the petition and replies prior to reaching a decision on the merits.

This action will not significantly affect either the quality of the human environment or the conservation of energy resources.

Decided: April 23, 1990.

By the Commission, Chairman Philbin, Vice Chairman Phillips, Commissioners Simmons, Lamboley, and Emmett.

Noreta R. McGee,

Secretary.

[FR Doc. 90-9957 Filed 4-27-90; 8:45 am]

BILLING CODE 7035-01-M

[1] The exclusions were established because of our concern that the empty car provisions would impose unfair burdens on small railroads. *See Boxcar Car Hire and Car Service*, 3 I.C.C. 2d 1 (1986).

DEPARTMENT OF JUSTICE

Drug Enforcement Administration

[Docket No. 89-62]

Maryann Marsilii Isaac, R.Ph., d/b/a Bell Apothecary, Easton, Pennsylvania; Hearing

Notice is hereby given that on October 17, 1989, the Drug Enforcement Administration, Department of Justice, issued to Maryann Narsilii Isaac, R.Ph., an Order to Show Cause as to why the Drug Enforcement Administration should not deny your application for a DEA Certificate of Registration.

Thirty days have elapsed since the said Order to Show Cause was received by Respondent, and written request for a hearing having been filed with the Drug Enforcement Administration, notice is hereby given that a hearing in this matter will be held on Tuesday, May 15, 1990, commencing at 10:00 am., at the United States Custom House, Second and Chestnut Streets, Philadelphia, Pennsylvania.

Dated: April 23, 1990.

Terrence M. Burke,

Acting Administrator, Drug Enforcement Administration.

[FR Doc. 90-9905 Filed 04-27-90; 8:45 am]

BILLING CODE 4410-09-M

[Docket No. 90-5]

James R. Ungar, M.D., Palmdale, CA; Hearing

Notice is hereby given that on January 29, 1990, the Drug Enforcement Administration, Department of Justice, issued to James R. Ungar, M.D., an Order to Show Cause as to why the Drug Enforcement Administration should not deny your application for a DEA Certificate of Registration.

Thirty days have elapsed since the said Order to Show Cause was received by Respondent, and written request for a hearing having been filed with the Drug Enforcement Administration, notice is hereby given that a hearing in this matter will be held on Wednesday, May 2, 1990, commencing at 9:30 a.m., at the United States Court of Appeals for the Ninth Circuit, 125 South Grand Avenue, Pasadena, California.

Dated: April 23, 1990.

Terrence M. Burke,

Acting Administrator, Drug Enforcement Administration.

[FR Doc. 90-9904 Filed 4-24-90; 8:45 am]

BILLING CODE 4410-09-M

DEPARTMENT OF LABOR

Employment and Training Administration

Investigations Regarding Certifications of Eligibility To Apply for Worker Adjustment Assistance; AVX Tantalum Corp., et al.

Petitions have been filed with the Secretary of Labor under section 221(a) of the Trade Act of 1974 ("the Act") and are identified in the appendix to this notice. Upon receipt of these petitions, the Director of the Office of Trade Adjustment Assistance, Employment and Training Administration, has instituted investigations pursuant to section 221(a) of the Act.

The purpose of each of the investigations is to determine whether the workers are eligible to apply for adjustment assistance under title II, chapter 2, of the Act. The investigations will further relate, as appropriate, to the

determination of the date on which total or partial separations began or threatened to begin and the subdivision of the firm involved.

The petitioners of any other persons showing a substantial interest in the subject matter of the investigations may request a public hearing, provided such request is filed in writing with the Director, Office of Trade Adjustment Assistance, at the address shown below, not later than May 10, 1990.

Interested persons are invited to submit written comments regarding the subject matter of the investigations to the Director, Office of Trade Adjustment Assistance, at the address shown below, not later than May 10, 1990.

The petitions filed in this case are available for inspection at the Office of the Director, Office of Trade Adjustment Assistance, Employment and Training Administration, U.S. Department of Labor, 601 D Street NW., Washington, DC 20213.

Signed at Washington, DC this 16th day of April 1990.

Marvin M. Fooks,

Director, Office of Trade Adjustment Assistance.

APPENDIX

Petitioner (union/workers/firm)	Location	Date received	Date of petition	Petition No.	Articles produced
AVX Tantalum Corp. (workers)	Biddeford, ME	4/16/90	4/2/90	24,277	Capacitors.
Applied Resource (workers)	Hoquiem, WA	4/16/90	3/29/90	24,278	Lumber.
Arrow Elastic Corp. (workers)	Springfield, MA	4/16/90	3/28/90	24,279	Elastic Webbing for Clothes.
Bay Tech., Inc. (workers)	Midland, TX	4/16/90	3/26/90	24,280	Oil & Gas.
Bourns, Inc. (workers)	Ames, IA	4/16/90	4/3/90	24,281	Potentiometers.
Bralco Foundry, Inc. (workers)	Seattle, WA	4/16/90	3/11/90	24,282	Castings.
Bristol Knitting Div. (company)	Fall River, MA	4/16/90	4/4/90	24,283	Men's & Ladies' Sportswear.
Chevron Resources (workers)	Grants, NM	4/16/90	4/3/90	24,284	Uranium.
Climax Molybdenum Co. (workers)	Fort Madison, IA	4/16/90	4/3/90	24,285	APT.
Coleman Products Co. (workers)	Coleman, WI	4/16/90	4/5/90	24,286	Wire.
Demco (workers)	Oklahoma City, OK	4/16/90	4/6/90	24,287	Chokes & Valves.
Ervite Corp. (company)	Erie, PA	4/16/90	4/9/90	24,288	Computer Parts.
Franette Mfg. Co., Inc	W. New York, NJ	4/16/90	3/29/90	24,289	Ladies' Coats.
Garland Corp. (company)	Brockton, MA	4/16/90	4/4/90	24,290	Men's & Ladies' Sportswear.
Garland Distribution Center (company)	Falls River, MA	4/16/90	4/4/90	24,291	Men's & Ladies' Sportswear.
Henderson Camp Products, Inc	Vancouver, WA	4/16/90	4/13/90	24,292	Tents & Sleeping Bags.
High Q Mfg. (company)	Atlanta, MI	4/16/90	3/27/90	24,293	Wiring Harnesses.
Hy-Ka Cedar Products (company)	Sedro Woolley, WA	4/16/90	4/4/90	24,294	Shakes & Shingles.
Interstyle, Inc. (ILGWU)	St. Louis, MO	4/16/90	3/28/90	24,295	Sportswear.
L.C.I. Industries, Inc. (workers)	Newark, NJ	4/16/90	3/29/90	24,296	Tablecloths.
Lebo Peerless Corp. (ACTWU)	Bloomfield, NJ	4/16/90	4/2/90	24,297	Suitcases.
Lennon Wallpaper Co. (workers)	Shorewood, IL	4/16/90	3/31/90	24,298	Wallpaper.
Oster-Sunbeam Co. (workers)	McMinnville, TN	4/16/90	4/7/90	24,299	Appliances.
Sombur Machine & Tool Co. (workers)	Port Huron, MI	4/16/90	4/5/90	24,300	Metal Fasteners.
TDC Supply, Inc. (company)	San Angelo, TX	4/16/90	3/30/90	24,301	Oil & Gas.
Tucker Drilling Co., Inc. (company)	San Angelo, TX	4/16/90	3/30/90	24,302	Oil & Gas.
Union Drilling Div. (workers)	Centerville, PA	4/16/90	4/3/90	24,303	Oil & Gas.
Westinghouse Elec. Corp. (workers)	Pittsburgh, PA	4/16/90	3/21/90	24,304	Marketing.
Willamette Indus., Inc. (workers)	Sweet Home, OR	4/16/90	3/27/90	24,305	Softwood, Veneer.

[FR Doc. 90-9956 Filed 4-27-90; 8:45 am]
BILLING CODE 4810-30-M

NATIONAL AERONAUTICS AND SPACE ADMINISTRATION

[Notice 90-30]

NASA Advisory Council; Meeting

AGENCY: National Aeronautics and Space Administration.

ACTION: Notice of meeting.

SUMMARY: In accordance with the Federal Advisory Committee Act, Public Law 92-463, as amended, the National Aeronautics and Space Administration announces a forthcoming meeting of the NASA Advisory Council (NAC).

DATES: May 16, 1990, 9 a.m. to 5 p.m.; and May 17, 1990, 8:30 a.m. to Noon.

ADDRESSES: National Aeronautics and Space Administration, room 7002, Federal Office Building 6, 400 Maryland Avenue SW., Washington, DC 20546.

FOR FURTHER INFORMATION CONTACT: Dr. Sylvia D. Fries, Code ADA-2, National Aeronautics and Space Administration, Washington, DC 20546, 202/453-8766.

SUPPLEMENTARY INFORMATION: The NAC was established as an interdisciplinary group to advise senior management on the full range of NASA's programs, policies, and plans. The Council is chaired by Dr. John L. McLucas and is composed of 28 members. Standing committees containing additional members report to the Council and provide advice in the substantive areas of aeronautics, aerospace medicine, space science and applications, space systems and technology, space station, commercial programs, and history, as they relate to NASA's activities.

The meeting will be closed to the public from 4 p.m. to 5 p.m. on May 16 for a discussion of the qualifications of candidates for membership. Such a discussion would invade the privacy of the candidates and other individuals involved. Since this session will be concerned with matters listed in 5 U.S.C. 552b(c)(6), it has been determined that the meeting be closed to the public for this period of time. The remainder of the meeting will be open to the public up to the seating capacity of the room, which is approximately 60 persons including Council members and other participants. It is imperative that the meeting be held on this date to accommodate the scheduling priorities of the paticipants. Visitors will be requested to sign a visitor's register.

Type of meeting: Open—except for a closed session as noted in the agenda below.

Agenda:

May 16, 1990

9 a.m.—Introductory Remarks.

9:15 a.m.—Council Actions on Committee Reports.

1 p.m.—Council Actions on Committee Reports Continued.

3 p.m.—Council Agenda for Coming Year.
4 p.m.—Closed Session—Prospective Members.
5 p.m.—Adjourn.
May 17, 1990
8:30 a.m.—Summation of Recommendations.
Noon—Adjourn.

Dated: April 23, 1990.

John W. Gaff,

Advisory Committee Management Officer, National Aeronautics and Space Administration.

[FR Doc. 90-9917 Filed 4-27-90; 8:45 am]

BILLING CODE 7510-01-M

NATIONAL ARCHIVES AND RECORDS ADMINISTRATION

Records Schedules; Availability and Request for Comments

AGENCY: National Archives and Records Administration, Office of Records Administration.

ACTION: Notice of availability of proposed records schedules; request for comments.

SUMMARY: The National Archives and Records Administration (NARA) publishes notice at least once monthly of certain Federal agency requests for records disposition authority (records schedules). Records schedules identify records of sufficient value to warrant preservation in the National Archives of the United States. Schedules also authorize agencies after a specified period to dispose of records lacking administrative, legal, research, or other value. Notice is published for records schedules that (1) propose the destruction of records not previously authorized for disposal, or (2) reduce the retention period for records already authorized for disposal. NARA invites public comments on such schedules, as required by 44 USC 3303a(a).

DATES: Requests for copies must be received in writing on or before June 14, 1990. Once the appraisal of the records is completed, NARA will send a copy of the schedule. The requester will be given 30 days to submit comments.

ADDRESSES: Address requests for single copies of schedules identified in this notice to the Records Appraisal and Disposition Division (NIR), National Archives and Records Administration, Washington, DC 20408. Requesters must cite the control number assigned to each schedule when requesting a copy. The control number appears in parentheses immediately after the name of the requesting agency.

SUPPLEMENTARY INFORMATION: Each year U.S. Government agencies create billions of records on paper, film, magnetic tape, and other media. In order to control this accumulation, agency records managers prepare records schedules specifying when the agency no longer needs the records and what happens to the records after this period. Some schedules are comprehensive and cover all the records of an agency or one of its major subdivisions. These comprehensive schedules provide for the eventual transfer to the National Archives of historically valuable records and authorize the disposal of all other records. Most schedules, however, cover records of only one office or program or a few series of records, and many are updates of previously approved schedules. Such schedules also may include records that are designated for permanent retention.

Destruction of records requires the approval of the Archivist of the United States. This approval is granted after a thorough study of the records that takes into account their administrative use by the agency of origin, the rights and interests of the Government and of private persons directly affected by the Government's activities, and historical or other value.

This public notice identifies the Federal agencies and their subdivisions requesting disposition authority, includes the control number assigned to each schedule, and briefly describes the records proposed for disposal. The records schedule contains additional information about the records and their disposition. Further information about the disposition process will be furnished to each requester.

Schedules Pending

1. Department of the Air Force (N1-AFU-90-31). Routine resources management records.
2. Department of the Air Force (N1-AFU-90-35). Routine administrative orders.
3. Department of the Air Force (N1-AFU-90-36). Routine records relating to cost-cutting programs.
4. Department of the Navy (N1-38-90-1). Routine, facilitative records concerning communications systems.
5. Department of Justice, Federal Bureau of Investigation (N1-65-90-2). Automated index data pertaining to case files whose disposal has been previously authorized. (Data relating to permanent case files will be retained permanently.)
6. Department of Labor, Bureau of Labor Management Relations and Cooperative Programs (N1-317-90-1). Modification of disposition standards for Redwood Employee Protection Program case files.
7. National Archives and Records Administration (N1-GRS-90-2). Addition to General Records Schedule 1, Civilian Personnel Records, to cover routine records accumulated by Federal agencies in connection with employee drug testing programs conducted in accordance with Executive Order 12564 and Public Law 100-71.
8. Public Health Service, National Institute of Mental Health, St. Elizabeth's Hospital (N1-418-89-1). Subject Files of the Construction Section, 1963-70.
9. Department of State, U.S. Embassy Madrid (N1-84-903). Routine and facilitative records relating to the U.S. Spanish Joint Committee for Scientific and Technological Cooperation.

Dated: April 23, 1990.

Don W. Wilson,

Archivist of the United States.

[FR Doc. 90-9939 Filed 4-27-90; 8:45 am]

BILLING CODE 7515-01-M

NATIONAL FOUNDATION ON THE ARTS AND THE HUMANITIES

Expansion Arts Advisory Panel; Meeting

Pursuant to section 10(a)(2) of the Federal Advisory Committee Act (Pub. L. 92-463), as amended, notice is hereby given that a meeting of the Expansion Arts Advisory Panel (Community Foundation Initiative Section) to the National Council on the Arts will be held on May 23, 1990, from 9:15 a.m.-3:15 pm. in room 714 at the Nancy Hanks Center, 1100 Pennsylvania Avenue NW., Washington, DC 20506.

A portion of this meeting will be open to the public on May 23 from 9:15 a.m.-10:00 a.m. and from 1:30 p.m.-3:15 p.m. The topics will be general program overview and policy issues.

The remaining portion of this meeting on May 23 from 10:00 a.m.-1:30 p.m. is for the purpose of Panel review, discussion, evaluation, and recommendation on applications for financial assistance under the National Foundation on the Arts and the Humanities Act of 1965, as amended, including information given in confidence to the agency by grant applicants. In accordance with the determination of the Chairman published in the Federal Register of February 13, 1980, these sessions will be closed to the public pursuant to subsection (c)(4), (6) and (9)(B) of section 552b of title 5, United States Code.

If you need special accommodations due to a disability, please contact the Office of Special Constituencies, National Endowment for the Arts, 1100 Pennsylvania Avenue NW., Washington, DC 20506, 202/682-5532, TTY 202/682-5496, at least seven (7) days prior to the meeting.

Further information with reference to this meeting can be obtained from Ms. Yvonne M. Sabine, Advisory Committee Management Officer, National Endowment for the Arts, Washington, DC 20506, or call (202) 682-5433.

Dated: April 23, 1990.

Yvonne M. Sabine,

Director,

Council and Panel Operations, National Endowment for the Arts.

[FR Doc. 90-9869 Filed 4-27-90; 8:45 am]

BILLING CODE 7537-01-M

Inter-Arts Advisory Panel; Meeting

Pursuant to section 10(a)(2) of the Federal Advisory Committee Act (Pub. L. 92-463), as amended, notice is hereby given that a meeting of the Inter-Arts Advisory Panel (Challenge III Section) to the National Council on the Arts will be held on May 15, 1990, from 9 a.m.-5 p.m. in Room 714 of the Nancy Hanks Center, 1100 Pennsylvania Avenue NW., Washington, DC 20506.

This meeting is for the purpose of Panel review, discussion, evaluation, and recommendation on applications for financial assistance under the National Foundation on the Arts and the Humanities Act of 1965, as amended, including discussion of information given in confidence to the Agency by grant applicants. In accordance with the determination of the Chairman published in the **Federal Register** of February 13, 1980, these sessions will be closed to the public pursuant to subsections (c)(4), (6) and (9)(B) of section 552b of title 5, United States Code.

Further information with reference to this meeting can be obtained from Ms. Yvonne M. Sabine, Advisory Committee Management Officer, National Endowment for the Arts, Washington, DC 20506, or call (202) 682-5433.

Dated: April 23, 1990.

Yvonne M. Sabine,

Director, Council and Panel Operations, National Endowment for the Arts.

[FR Doc. 90-9870 Filed 4-27-90; 8:45 am]

BILLING CODE 7537-01-M

Museum Advisory Panel; Meetings

Pursuant to section 10(a)(2) of the Federal Advisory Committee Act (Pub. L. 92-463), as amended, notice is hereby given that a meeting of the Museum Advisory Panel (Special Artistic Initiatives Section) to the National Council on the Arts will be held on May 16, 1990, from 9 am.-5:30 p.m. in room M09 at the Nancy Hanks Center, 1100 Pennsylvania Avenue NW., Washington, DC 20506.

A portion of this meeting will be open to the public on May 16 from 9 a.m.-9:30 am. The topic will be opening remarks.

The remaining portion of this meeting on May 16 from 9:30 a.m.-5:30 p.m. is for the purpose of Panel review, discussion, evaluation, and recommendation on applications for financial assistance under the National Foundation on the Arts and the Humanities Act of 1965, as amended, including information given in confidence to the agency by grant applicants. In accordance with the determination of the Chairman published in the **Federal Register** of February 13, 1980, these sessions will be closed to the public pursuant to subsection (c) (4), (6) and (9)(B) of section 552b of title 5, United States Code.

If you need special accommodations due to a disability, please contact the Office of Special Constituencies, National Endowment for the Arts, 1100 Pennsylvania Avenue NW., Washington, DC 20506, 202/682-5532, TTY 202/682-5496, at least seven (7) days prior to the meeting.

Further information with reference to this meeting can be obtained from Ms. Yvonne M. Sabine, Advisory Committee Management Officer, National Endowment for the Arts, Washington, DC 20506, or call (202) 682-5433.

Yvonne M. Sabine,

Director, Council and Panel Operations, National Endowment for the Arts.

[FR Doc. 90-9871 Filed 4-27-90; 8:45 am]

BILLING CODE 7537-01-M

Museum Advisory Panel; Meeting

Pursuant to section 10(a)(2) of the Federal Advisory Committee Act (Pub. L. 92-463), as amended, notice is hereby given that a meeting of the Museum Advisory Panel (Overview Section) to the National Council on the Arts will be held on May 15, 1990, from 9 a.m.-5:30 p.m. in room M09 at the Nancy Hanks Center, 1100 Pennsylvania Avenue NW., Washington, DC 20506.

This meeting will be open to the public on a space available basis. The topics for discussion will be Program budget, FY 92 guidelines, Director's report, and general issues affecting the museum field and future directions for the program.

If you need special accommodations due to a disability, please contact the Office of Special Constituencies, National Endowment for the Arts, 1100 Pennsylvania Avenue NW., Washington, DC 20506, 202/682-5532, TTY 202/682-5496, at least seven (7) days prior to the meeting.

Further information with reference to this meeting can be obtained from Ms. Yvonne M. Sabine, Advisory Committee Management Officer, National Endowment for the Arts, Washington, DC 20506, or call (202) 682-5433.

Yvonne M. Sabine,

Director, Council and Panel Operations, National Endowment for the Arts.

[FR Doc. 90-9872 Filed 4-27-90; 8:45 am]

BILLING CODE 7537-01-M

Visual Arts Advisory Panel; Meeting

Pursuant to section 10(a)(2) of the Federal Advisory Committee Act (Pub. L. 92-463), as amended, notice is hereby given that a meeting of the Visual Arts Advisory Panel (Visual Artists Fellowships/Sculpture Section) to the National Council on the Arts will be held on May 14, 1990, from 9 a.m.-8 p.m., May 15-17 from 9 a.m.-6 p.m., and on May 18 from 10 a.m.-4 p.m. in room 716 at the Nancy Hanks Center, 1100 Pennsylvania Avenue NW., Washington, DC 20506.

A portion of this meeting will be open to the public on May 18 from 2:30 p.m.-4 p.m. The topic will be policy issues and guideline recommendations.

The remaining portions of this meeting on May 14 from 9 a.m.-8 p.m., May 15-17 from 9 a.m.-6 p.m., and on May 18 from 10 a.m.-2:30 p.m. are for the purpose of Panel review, discussion, evaluation, and recommendation on applications for financial assistance under the National Foundation on the Arts and the Humanities Act of 1965, as amended, including information given in confidence to the agency by grant applicants. In accordance with the determination of the Chairman published in the **Federal Register** of February 13, 1980, these sessions will be closed to the public pursuant to subsection (c)(4), (6) and (9)(B) of

section 552b of title 5, United States Code.

If you need special accommodations due to a disability, please contact the Office of Special Constituencies, National Endowment for the Arts, 1100 Pennsylvania Avenue NW., Washington, DC 20506, 202/682-5532, TTY 202/682-5496, at least seven (7) days prior to the meeting.

Further information with reference to this meeting can be obtained from Ms. Yvonne M. Sabine, Advisory Committee Management Officer, National Endowment for the Arts, Washington, DC 20506, or call (202) 682-5433.

Dated: April 23, 1990.

Yvonne M. Sabine,

Director, Council and Panel Operations, National Endowment for the Arts.

[FR Doc. 90-9873 Filed 4-27-90; 8:45 am]

BILLING CODE 7537-01-M

Arts in Education Advisory Panel; Meeting

Pursuant to section 10(a)(2) of the Federal Advisory Committee Act (Pub. L. 92-463), as amended, notice is hereby given that a meeting of the Arts in Education Advisory Panel (Challenge III Section) to the National Council on the Arts will be held on June 15, 1990, from 9:30 a.m.-3:30 p.m. in room 730 at the Nancy Hanks Center, 1100 Pennsylvania Avenue NW., Washington, DC 20506.

A portion of this meeting will be open to the public on June 15 from 2:30 p.m.-3:30 p.m. The topic will be policy issues and guidelines.

The remaining portion of this meeting on June 15 from 9:30 a.m.-2:30 p.m. is for the purpose of Panel review, discussion, evaluation, and recommendation on applications for financial assistance under the National Foundation on the Arts and the Humanities Act of 1965, as amended, including information given in confidence to the agency by grant applicants. In accordance with the determination of the Chairman published in the **Federal Register** of February 13, 1980, these sessions will be closed to the public pursuant to subsection (c)(4), (6) and (9)(B) of section 552b of title 5, United States Code.

If you need special accommodations due to a disability, please contact the Office of Special Constituencies, National Endowment for the Arts, 1100 Pennsylvania Avenue NW., Washington, DC 20506, 202/682-5532, TTY 202/682-5496, at least seven (7) days prior to the meeting.

Further information with reference to this meeting can be obtained from Ms. Yvonne M. Sabine, Advisory Committee Management Officer, National Endowment for the Arts, Washington, DC 20506, or call (202) 682-5433.

Yvonne M. Sabine,

Director, Council and Panel Operations, National Endowment for the Arts.

[FR Doc. 90-9866 Filed 4-27-90; 8:45 am]

BILLING CODE 7537-01-M

Arts in Education Advisory Panel; Meeting

Pursuant to section 10(a)(2) of the Federal Advisory Committee Act (Pub. L. 92-463), as amended, notice is hereby given that a meeting of the Arts in Education Advisory Panel (Arts in Schools Basic Education Grants Section) to the National Council on the Arts will be held on May 16, 1990, from 9 a.m.-6:30 p.m. and on May 17 from 9:15 a.m.-1 p.m. in room 730 at the Nancy Hanks Center, 1100 Pennsylvania Avenue NW., Washington, DC 20506.

A portion of this meeting will be open to the public on May 17 from 11 a.m.-1 p.m. The topic will be policy issues.

The remaining portions of this meeting on May 16 from 9 a.m.-6:30 p.m. and on May 17 from 9:15 a.m.-11 a.m. are for the purpose of Panel review, discussion, evaluation, and recommendation on applications for financial assistance under the National Foundation on the Arts and the Humanities Act of 1965, as amended, including information given in confidence to the agency by grant applicants. In accordance with the determination of the Chairman published in the **Federal Register** of February 13, 1980, these sessions will be closed to the public pursuant to subsection (c)(4), (6) and (9)(B) of section 552b of title 5, United States Code.

If you need special accommodations due to a disability, please contact the Office of Special Constituencies, National Endowment for the Arts, 1100 Pennsylvania Avenue NW., Washington, DC 20506, 202/682-5532, TTY 202/682-5496, at least seven (7) days prior to the meeting.

Further information with reference to this meeting can be obtained from Ms. Yvonne M. Sabine, Advisory Committee Management Officer, National Endowment for the Arts, Washington, DC 20506, or call (202) 682-5433.

Yvonne M. Sabine,

Director, Council and Panel Operations, National Endowment for the Arts.

[FR Doc. 90-9867 Filed 4-27-90; 8:45 am]

BILLING CODE 7537-01-M

Expansion Arts Advisory Panel; Meeting

Pursuant to section 10(a)(2) of the Federal Advisory Committee Act (Pub. L. 92-463), as amended, notice is hereby given that a meeting of the Expansion Arts Advisory Panel (Services to the Field Section) to the National Council on the Arts will be held on June 5, 1990, from 9:15 a.m.-5:30 p.m. in room 730 at the Nancy Hanks Center, 1100 Pennsylvania Avenue NW., Washington, DC 20506.

A portion of this meeting will be open to the public on June 5 from 9:15 a.m.-10:30 a.m. and from 4:30 p.m.-5:30 p.m. The topics will be general program overview and policy issues.

The remaining portion of this meeting on June 5 from 10:30 a.m.-4:30 p.m. is for the purpose of Panel review, discussion, evaluation, and recommendation on applications for financial assistance under the National Foundation on the Arts and the Humanities Act of 1965, as amended, including information given in confidence to the agency by grant applicants. In accordance with the determination of the Chairman published in the **Federal Register** of February 13, 1980, these sessions will be closed to the public pursuant to subsection (c)(4), (6) and (9)(B) of section 552b of title 5, United States Code.

If you need special accommodations due to a disability, please contact the Office of Special Constituencies, National Endowment for the Arts, 1100 Pennsylvania Avenue NW., Washington, DC 20506, 202/682-5532, TTY 202/682-5496, at least seven (7) days prior to the meeting.

Further information with reference to this meeting can be obtained from Ms. Yvonne M. Sabine, Advisory Committee Management Officer, National Endowment for the Arts, Washington, DC 20506, or call (202) 682-5433.

Yvonne M. Sabine,

Director, Council and Panel Operations, National Endowment for the Arts.

[FR Doc. 90-9868 Filed 4-27-90; 8:45 am]

BILLING CODE 7537-01-M

NUCLEAR REGULATORY COMMISSION

Duquesne Light Co., Beaver Valley Power Station, Unit 1; Exemption

I

The Dusquesne Light Company (DLC, the licensee) is the holder of Facility Operating License No. DPR-66 which authorizes operation of Beaver Valley

Power Station, Unit 1. The license provides, among other things, that Beaver Valley Power Station, Unit 1 be subject to all rules, regulations, and Orders of the Commission now or hereafter in effect.

The plant is a pressurized water reactor at the licensee's site located in Shippingport, Pennsylvania.

II

The Code of Federal Regulations in 10 CFR part 50, appendix A, General Design Criterion (GDC) 57 requires that each line that penetrates the primary reactor containment and is neither part of the reactor coolant system boundary nor connected directly to the containment atmosphere, shall have at least one containment isolation valve (CIV) which should be either automatic, locked closed, or capable of remote operation. It furthers stipulates that simple check valves may not be used to satisfy the closed system isolation criterion.

III

By letter dated July 8, 1989, the licensee requested an exemption for the Beaver Valley Power Station, Unit 1 from the requirements of 10 CFR part 50, appendix A, GDC 57 concerning containment isolation valves. The licensee proposes to use simple check valves in the auxiliary feedwater (AFW) system to satisfy the closed system isolation criterion.

IV

Each of the three main feedwater lines at Beaver Valley, Unit 1, has an AFW system branch connection located downstream of the main feedwater isolation valve and outside of containment. These AFW branch lines contain a simple check valve located upstream of another motor-operated valve. These motor-operated valves (MOV-FW-158 A,B,C) were previously credited as the CIVs for the AFW system until it was determined that they did not meet the single (electrical) failure criterion, as discussed in AEC Regulatory Staff Position 36. When the power supplies to their motor operators were removed to satisfy Position 36, the valves no longer met the criterion set forth for containment isolation.

These AFW system branch lines do not form a path for radioactivity release due to the existence of two physical barriers: the steam generators inside containment, and the check valves described above. Local manual operation of these check valves would not be needed to ensure their closure in the event of an accident, and only a differential pressure of about 2 psi on the containment side of the valve would be needed to shut them. Further, the AFW piping downstream of each check valve is usually full of water during normal operations, thus providing an additional barrier against the release of radioactivity to the environment.

There are other check valves and motor-operated valves (located in parallel) upstream of these single check valves which could provide backup isolation capability, if needed. Also, because of the need to assure secondary system integrity inside containment in the event of a LOCA, the system has been seismically designed and missile-protected so that the rupture of the AFW system is not postulated to occur either concurrent with or as a result of a loss-of-coolant accident (LOCA). Additionally, a similar AFW system configuration was approved by the staff for the North Anna Power Station, Units Nos. 1 and 2, on the same bases. The staff finds the justification for the proposed exemption acceptable, because the existing containment isolation features are sufficient to achieve the underlying purpose of GDC 57.

V

Accordingly, the staff has determined that pursuant to 10 CFR 50.12(a), (1) This exemption as described in section III above is authorized by law, will not present an undue risk to the public health and safety and is consistent with common defense and security, and (2) special circumstances are present for the exemption in that application of the regulation in these particular circumstances is not necessary to achieve the unerlying purposes of GDC 57, Appendix A to 10 CFR part 50. Therefore, the staff hereby grants this exemption to permit use of check valves FW-42, 43 and 44 of the AFW system as containment isolation valves.

Pursuant to 10 CFR 51.32, the staff has determined that the granting of this exemption will not result in any significant environmental impact (55 FR 15306).

This exemption is effective upon issuance.

Dated at Rockville, Maryland this 24th day of April, 1990.

For the Nuclear Regulatory Commission.

Steven A. Varga,

Director, Division of Reactor Projects—I/II Office of Nuclear Reactor Regulation.

[FR Doc. 90-9951 Filed 4-27-90; 8:45 am]

BILLING CODE 7590-01-M

[Docket No. 50-333]

Power Authority of State of New York; Issuance of Amendment to Facility Operating License

In the matter of James A. FitzPatrick Nuclear Power Plant Notice of Consideration of Issuance of Amendment to Facility Operating License and Proposed no Significant Hazards, Consideration Determination and Opportunity for Hearing.

The U.S. Nuclear Regulatory Commission (the Commission) is considering issuance of an amendment to Facility Operating License No. DPR-59, issued to the Power Authority of the State of New York (the licensee), for operation of the James A. FitzPatrick Nuclear Power Plant located in Oswego County, New York.

The proposed amendment was originally submitted by letter dated January 12, 1990 and noticed on March 7, 1990 (55 FR 8234). The proposed amendment has been superseded by letter dated April 20, 1990. The purpose of the proposed amendment is to relocate the cycle-specific parameter limits from the Technical Specifications (TS) and place them in the Core Operating Limits Report (COLR) in accordance with guidance contained in Generic Letter No. 88-16. The original amendment proposed to relocate the Fuel Design Features from the TS and place them in the COLR. This, however, was not in conformance with present staff interpretation of the Generic Letter and has been changed by the licensee in the April 20, 1990 application to indicate that the information will not be relocated to the COLR. The proposed TS amendment will, instead, indicate that each fuel assembly consists of fuel assemblies whose design has been approved by the NRC staff for use in BWRs.

As a result of staff review of the proposed amendment using the guidance of Generic Letter 88-16, a number of changes to the amendment became necessary in order to comply with the staff's application of the guidance. This resulted in the need for the licensee to prepare a new amendment proposal which differs somewhat in the details of how the changes will be incorporated. Since plant startup from the present refueling outage is scheduled for May 15, 1990, the amendment must be processed prior to that date. Since this does not allow 30 days for public comment, the NRC is processing the proposed amendment on an exigent basis under the provisions of 10 CFR 50.91(a)(6) and allowing two weeks for public comment.

Before issuance of the proposed license amendment, the Commission will have made findings required by the Atomic Energy Act of 1954, as amended (the Act) and the Commission's regulations.

The Commission has made a proposed determination that the amendment request involves no significant hazards consideration. Under the Commission's regulations in 10 CFR 50.92, this means that operation of the facility in accordance with the proposed amendment would not (1) Involve a significant increase in the probability or consequences of an accident previously evaluated; or (2) create the possiblity of a new or different kind of accident from any accident previously evaluated; or (3) involve a significant reduction in a margin of safety.

The proposed change to the original amendment proposal involving the Fuel Design Features section of the TS does not involve a significant increase in the probability or consequences of an accident previously evaluated. The change would involve removal of the designation number for the different fuel types from the Fuel Design Features section of the TS and replacing it with more generalized wording. The fuel type designations are used and controlled by the fuel reload analysis which is prepared for each core reload. Since this process remains unchanged, the probability or consequences of an accident previously evaluated is not increased.

The proposed change to the Fuel Design Features would not create the probability of a new or different kind of accident from any accident previously evaluated since the method of control over and use of the information in the core reload analysis is not changed.

The proposed changes to the Fuel Design Features would not involve a significant reduction in a margin of safety since, again, the control over and use of the information in the core reload analysis is not changed.

Accordingly, the Commission proposes to determine that this change does not involve a significant hazards consideration.

The Commission is seeking public comments on this proposed determination. Any comments received within fifteen (15) days after the date of publication of this notice will be considered in making any final determination. The Commission will not normally make a final determination unless it receives a request for a hearing.

Written comments may be submitted by mail to the Regulatory Publications Branch, Division of Freedom of Information and Publications Services, Office of Administration, U.S. Nuclear Regulatory Commission, Washington, DC 20555, and should cite the publication date and page number of this **Federal Register** notice. Written comments may also be delivered to room P-223, Phillips Building, 7920 Norfolk Avenue, Bethesda, Maryland, from 7:30 a.m. to 4:15 p.m. Copies of written comments received may be examined at the NRC Public Document room, the Gelman Building, 2120 L Street, NW., Washington, DC. The filing of requests for hearing and petitions for leave to intervene is discussed below.

By May 15, 1990, the licensee may file a request for a hearing with respect to issuance of the amendment to the subject facility operating license and any person whose interest may be affected by this proceeding and who wishes to participate as a party in the proceeding must file a written request for hearing and a petition for leave to intervene. Requests for a hearing and petitions for leave to intervene shall be filed in accordance with the Commission's "Rules of Practice for Domestic Licensing Proceedings" in 10 CFR part 2. Interested persons should consult a current copy of 10 CFR 2.714 which is available at the Commission's Public Document room, the Gelman Building, 2120 L Street, NW., Washington, DC 20555 and at the Local Public Document room located at the State University of New York, Penfield Library, Reference and Documents Department, Oswego, New York 13126. If a request for a hearing or petition for leave to intervene is filed by the above date, the Commission or an Atomic Safety and Licensing Board, designated by the Commission or by the Chairman of the Atomic Safety and Licensing Board Panel, will rule on the request and/or petition; and the Secretary or the designated Atomic Safety and Licensing Board will issue a notice of hearing or an appropriate order.

As required by 10 CFR 2.714, a petition for leave to intervene shall set forth with particularity the interest of the petitioner in the proceeding, and how that interest may be affected by the results of the proceeding. The petition should specifically explain the reasons why intervention should be permitted with particular reference to the following factors: (1) The nature of the petitioner's right under the Act to be made a party to the proceeding; (2) the nature and extent of the petitioner's property, financial, or other interest in the proceeding; and (3) the possible effect of any order which may be entered in the proceeding on the petitioner's interest. The petition should also identify the specific aspect(s) of the subject matter of the proceeding as to which petitioner wishes to intervene. Any person who has filed a petition for leave to intervene or who has been admitted as a party may amend the petition without requesting leave of the Board up to fifteen (15) days prior to the first prehearing conference sceduled in the proceeding, but such an amended petition must satisfy the specificity requirements described above.

Not later than fifteen (15) days prior to the first prehearing conference scheduled in the proceeding, a petitioner shall file a supplement to the petition to intervene which must include a list of the contentions which are sought to be litigated in the matter. Each contention must consist of a specific statement of the issue of law or fact to be raised or controverted. In addition, the petitioner shall provide a brief explanation of the bases of the contention and a concise statement of the alleged facts or expert opinion which support the contention and on which the petitioner intends to rely in proving the contention at the hearing. The petitioner must also provide references to those specific sources and documents of which the petitioner is aware and on which the petitioner intends to rely to establish those facts or expert opinion. Petitioner must provide sufficient information to show that a genuine dispute exists with the applicant on a material issue of law or fact. Contentions shall be limited to matters within the scope of the amendment under consideration. The contention must be one which, if proven, would entitle the petitioner to relief. A petitioner who fails to file such a supplement which satisfies these requirements with respect to at least one contention will not be permitted to participate as a party.

Those permitted to intervene become parties to the proceeding, subject to any limitations in the order granting leave to intervene, and have the opportunity to participate fully in the conduct of the hearing, including the opportunity to present evidence and cross-examine witnesses.

If the amendment is issued before the expiration of 30-days, the Commission will make a final determination on the issue of no significant hazards consideration. If a hearing is requested, the final determination will serve to decide when the hearing is held.

If the final determination is that the amendment request involves no significant hazards consideration, the Commission may issue the amendment and make it effective, notwithstanding the request for a hearing. Any hearing

held would take place after issuance of the amendment.

If the final determination is that the amendment request involves a significant hazards consideration, any hearing held would take place before the issuance of any amendment.

Normally, the Commission will not issue the amendment until the expiration of the 15-day notice period. However, should circumstances change during the notice period, such that failure to act in a timely way would result, for example, in derating or shutdown of the facility, the Commission may issue the license amendment before the expiration of the 15-day notice period, provided that its final determination is that the amendment involves no significant hazards consideration. The final determination will consider all public and State comments received. Should the Commission take this action, it will publish in the **Federal Register** a notice of issuance. The Commission expects that the need to take this action will occur very infrequently.

A request for a hearing or a petition for leave to intervene must be filed with the Secretary of the Commission, U.S. Nuclear Regulatory Commission, Washington, DC 20555, Attention: Docketing and Services Branch, or may be delivered to the Commission's Public Document room, the Gelman Building, 2120 L Street, NW., Washington, DC, by the above date. Where petitions are filed during the last ten (10) days of the notice period, it is requested that the petitioner promptly so inform the Commission by a toll-free telephone call to Western Union at 1-(800) 325-6000 (in Missouri 1-(800) 342-6700). The Western Union operator should be given Datagram Identification Number 3737 and the following message addressed to Robert A. Capra: petitioner's name and telephone number; date petition was mailed; plant name; and publication date and page number of this **Federal Register** notice. A copy of the petition should also be sent to the Office of the General Counsel, U.S. Nuclear Regulatory Commission, Washington, DC 20555, and to Charles M. Pratt, 10 Columbus Circle, New York, NY 10019, attorney for the licensee.

Nontimely filings of petitions for leave to intervene, amended petitions, supplemental petitions and/or requests for hearing will not be entertained absent a determination by the Commission, the presiding officer or the presiding Atomic Safety and Licensing Board that the petition and/or request should be granted based upon a balancing of the factors specified in 10 CFR 2.714(a)(1)(i)-(v) and 2.714(d).

For further details with respect to this action, see the original application for amendment dated January 12, 1990, and the April 20, 1990 letter which superseded it, which are available for public inspection at the Commission's Public Document room, the Gelman Building, 2120 L Street, NW., Washington, DC 20555, and at the Local Public Document room located at the State University of New York, Penfield Library, Reference and Documents Department, Oswego, New York 13126.

Dated at Rockville, Maryland, this 24th day of April 1990.

For the Nuclear Regulatory Commission.

David E. LaBarge,

Project Manager, Project Directorate I-I, Division of Reactor Projects—I/II, Office of Nuclear Reactor Regulation.

[FR Doc. 90-9952 Filed 4-27-90; 8:45 am]

BILLING CODE 7590-01-M

User's Manual and Impacts-BRC Version 2.0 Computer Code; Availability

AGENCY: Nuclear Regulatory Commission.

ACTION: Availability of NUREG/CR-5517.

SUMMARY: The Nuclear Regulatory Commission has published NUREG/CR-5517, entitled "IMPACTS-BRC Version 2.0 Program User's Manual" and released the computer code to Argonne National Laboratory for distribution.

ADDRESSES: Copies of IMPACTS-BRC Computer Code Version 2.0 and NUREG/CR-5517 may be purchased by contacting the National Energy Software Center, Argonne National Laboratory, 9700 South Cass Ave., Argonne, Illinois 60439.

FOR FURTHER INFORMATION CONTACT: Chad Glenn, Division of Low-Level Waste Management and Decommissioning, Office of Nuclear Material Safety and Safeguards, U.S. Nuclear Regulatory Commission, Washington, DC 20555. Telephone: (301) 492-0567. Additional copies of NUREG/CR-5517 may be puchased from the Superintendent of Documents, U.S. Government Printing Office, P.O. Box 37082, Washington, DC 20013-7082.

SUPPLEMENTARY INFORMATION: NUREG/CR-5517 describs the procedures for implementing IMPACTS-BRC Version 2.0. The IMPACTS-BRC computer code was designed for use by the Nuclear Regulatory Commission and industry to evaluate petitions to classify specific waste streams as below regulatory concern (BRC) The code provides a capability for calculating radiation doses to a maximal individual, critical group, and the general population as a result of transportation, treatment, disposal, and post-disposal activities involving low level radioactive waste. Impacts are calculated for multiple nuclides and pathways depending on the treatment and or disposal options specified by the code user. The treatment and or disposal options include onsite incineration, offsite incineration at municipal and hazardous waste facilities, and offsite disposal at municipal and hazardous waste landfills. The IMPACTS-BRC Code gives the user the option of using either default environmental and facility parameters developed from reference treatment and disposal sites, or replacing default parameters with site-specific parameters. To facilitate code use, data input files are created and/or edited using a data preprocessor with pull-down menus and contact sensitive help screens. The code is written in FORTRAN and runs on 640KB IBM-PC and compatible computers.

Dated at Rockville, Maryland, this 20th day of April, 1990.

For the Nuclear Regulatory Commission.

John H. Austin,

Acting Chief, Regulatory Branch, Division of Low-Level Waste Management and Decommissioning, NMSS.

[FR Doc. 89-9954 Filed 4-27-90; 8:45 am]

BILLING CODE 7590-01-M

DEPARTMENT OF STATE

Inter-American Tropical Tuna Commission, Advisory Committee to the U.S. National Section; Partially Closed Meeting

The Department of State announces, pursuant to the provisions of Public Law 92-463, that the Advisory Committee to the U.S. National Section of the Inter-American Tropical Tuna Commission (IATTC) will meet on May 11, 1990, from 9 a.m. to 4:30 p.m. in the auditorium of the Southwest Fisheries Center of the National Marine Fisheries Service at 8604 La Jolla Shores Drive, La Jolla, California. The Advisory Committee meets annually to discuss the conservation and management of tuna fisheries in the eastern Pacific Ocean and U.S. preparations for meetings of the IATTC. The 47th meeting of the IATTC is scheduled for June 26-28, 1990, in Washington, DC.

The morning session will be open to the public and the public may participate in the discussion subject to the instructions of the Committee Chair. Subjects to be discussed include an

evaluation of the 1989 fishery experience, assessment of tuna stocks, a preliminary outlook for the 1990 fishery, and the IATTC tuna/porpoise program.

The Advisory Committee will meet in closed session on the afternoon of May 11. At this session, documents classified in accordance with Executive Order 12356 of April 12, 1982, will be circulated and discussed and matters will be considered which the public interest requires be withheld from disclosure. Accordingly, a determination has been made to close this session pursuant to section 10(d) of the Federal Advisory Committee Act, 5 USC App. I, s. 10(d) and 5 USC 552b (c)(1) and (c)(9). Requests for further information on the meeting should be directed to Brian Hallman, OES/OFA, Room 5806, Department of State, Washington, DC 20520. He may be reached by telephone at (202) 647-2335.

Dated: April 12, 1990.

Edward E. Wolfe,

Deputy Assistant Secretary, Oceans and Fisheries Affairs.

[FR Doc. 90-9929 Filed 4-27-90; 8:45 am]

BILLING CODE 4710-10-M

DEPARTMENT OF TRANSPORTATION

Office of the Secretary

[Docket No. 46898]

Japan Charter Allocation Proceeding

By Order 90-4-23,[1] we instituted the *Japan Charter Authorization Proceeding (1990/1991)* to allocate the 400 to 450 charter flights between the United States and Japan available to U.S. carriers during the period October 1, 1990, through September 30, 1991. Specifically, we established an evidentiary proceeding before an Administrative Law Judge and a procedural schedule. The procedural schedule required that applications, petitions for leave to intervene and petitions for reconsideration be filed by April 27, 1990 and answers thereto by May 2.

On April 19, 1990, Emery Air Freight and Emery Worldwide Airlines jointly requested a one-week extension of the above procedural dates. In support of that request, the Emery parties state that the existing dates conflict with hearings in the *U.S.-Japan All-Cargo Service Case* and the *1990 U.S.-Japan Gateways Proceeding*, that unless the answer date is extended, none of the parties will be able to evaluate the results of the May 5 forfeiture provision in responding to the issues raised by Order 90-4-23, and that the extension would not adversely affect the remaining procedural dates.

The Emery parties served all persons on the service list to Order 90-4-23 as well as Trans World Airlines, Inc. and MarkAir, Inc., two carriers that recently participated in Japan charter allocation proceedings. They also polled all parties served for a response to their request, and state that nine parties support their request while the remaining eleven carriers indicate that they will not oppose the request.

We have decided to grant the Emery parties request. We conclude that the applicants have presented valid reasons for such action and that no party will be prejudiced by extension of the requested procedural dates. Furthermore, we note that the amended dates will not delay our final decision in this proceeding.

Therefore, we modify the procedural schedule established in Order 90-4-23 as follows:

Applications, petitions for leave to intervene and petitions for reconsideration due: May 4, 1990.

Answers due: May 9, 1990.

All other procedural dates will remain the same as established by Order 90-4-23.

We will serve a copy of this notice on carriers named on the service list for Order 90-4-23, on all other certificated air carriers, and on Administrative Law Judge Burton S. Kolko.

Dated: April 24, 1990.

By: Patrick V. Murphy, Jr.,

Deputy Assistant Secretary for Policy and International Affairs.

[FR Doc. 90-9916 Filed 04-27-90; 8:45 am]

BILLING CODE 4910-62-M

[1] Published at 55 FR 14547, April 18, 1990.

Coast Guard

[CGD 90-029]

Lower Mississippi River Waterway Safety Advisory Committee; VTS Subcommittee Meeting

Pursuant to section 10(a)(2) of the Federal Advisory Committee Act (Pub. L. 92-463; 5 U.S.C. app. I) notice is hereby given of a meeting of the VTS Subcommittee of the Lower Mississippi River Waterway Safety Advisory Committee. The meeting will be held on Tuesday, May 22, 1990 at the United States Coast Guard Support Center, 4640 Urquhart Street, New Orleans, Louisiana. The meeting is scheduled to begin at 9 a.m. The agenda for the meeting consists of the following items:

1. Call to order.
2. Discussion of previous recommendations.
3. Presentation on European Vessel Traffic Service Systems.
4. Adjournment.

Attendance is open to the public. Members of the public may present written or oral statements at the meetings.

Additional information may be obtained from Commander Gary A. Bird, USCG, Executive Secretary, Lower Mississippi River Waterway Safety Advisory Committee, c/o Commander, Eighth Coast Guard District (oan), room 1209, Hale Boggs Federal Building, 501 Magazine Street, New Orleans, LA 70130-3396, telephone number (504) 589-3074.

Dated: April 18, 1990.

Kent H. Williams,

Captain, U.S. Coast Guard Commander, 8th Coast Guard District, Acting.

[FR Doc. 90-9912 Filed 4-27-90; 8:45 am]

BILLING CODE 4910-14-M

Federal Aviation Administration

Proposed Advisory Circular; Pilot Compartment View for Transport Category Airplanes

AGENCY: Federal Aviation Administration (FAA), DOT.

ACTION: Notice of proposed advisory circular and request for comments.

SUMMARY: This notice requests comments on a proposed advisory circular which provides information and guidance for demonstrating compliance with the airworthiness standards for transport category airplanes pertaining to pilot compartment view. These criteria include the geometric characteristics of the pilot compartment and properties of transparent materials necessary to assure adequate visibility from the flight deck.

DATES: Comments must be received on or before August 29, 1990.

ADDRESSES: Send all comments on the proposed AC to: Federal Aviation Administration, Attn: Patricia Siegrist, Transport Airplane Directorate, Aircraft Certification Service, Regulations Branch, ANM-114, 17900 Pacific Highway South, C-68966, Seattle, Washington 98168. Comments may be inspected at the above address between 7:30 a.m. and 4 p.m. weekdays, except Federal holidays.

FOR FURTHER INFORMATION CONTACT: Patricia Siegrist, Regulations Branch, ANM-114, at the above address, telephone (206) 431-2126.

SUPPLEMENTARY INFORMATION:

Comments Invited

A copy of the proposed AC may be obtained by contacting the person named above under "FOR FURTHER INFORMATION CONTACT." Interested persons are invited to comment on the proposed AC by submitting such written data, views, or arguments as they may desire. Commenters must identify the AC by title and submit comments in duplicate to the address specified above. All communications received on or before the closing date for comments will be considered by the Transport Airplane Directorate before issuing the final AC.

Discussion

On January 19, 1971, the FAA issued Notice of Proposed Rulemaking No. 71–2, Cockpit Vision and Cockpit Controls. This notice proposed amendments to the airworthiness standards for transport category airplanes which introduced comprehensive cockpit vision standards and changed the range of pilot heights used for the location and arrangement of cockpit controls. A majority of the commenters responding to Notice 71–2 objected to the proposed amendments. In general, the airplane manufacturers believed the proposed requirements were too stringent and exceeded the state-of-the-art, particularly with respect to the size of transparent panels, considering weight and structural strength necessary to provide clear vision in the specified areas. The manufacturing industry, represented by the Transport Airworthiness Requirements Committee (TARC) of the Aerospace Industries Association, maintained that the proposed size of the clear vision field was in excess of that required to meet the most important objective of the proposed standards. That objective was to provide optimum vision for avoidance of midair collisions in "see and be seen" conditions of flight. The committee thereupon carried out a computerized study program, which considered 10,000,000 hypothetical cases of pairs of airplanes on collision courses, considering reasonable airplane mixes of types, speeds, flight path angles, bank angles, etc. In addition, all known available data form actual midair collisions, reported near misses, and USAF Hazardous Air Traffic Reports (HATR) were used.

The vision field which evolved from the TARC study was somewhat smaller and its area redistributed in comparison with existing CAM 4b.350 recommendations and those proposed in Notice 71–2. The FAA withdrew the proposed rulemaking based on the information presented. Subsequent to that withdrawal, the Society of Automotive Engineers (SAE), Committee S–7, adopted the TARC recommendation as Aerospace Standard AS 580B.

The FAA has adopted the TARC/SAE visual field for this advisory circular. Some of the SAE criteria have been modified and adopted as guidance for validating the visual field. Users of this circular should bear in mind that the visual field described in this AC is that which the TARC study showed to be an acceptable minimum standard. Designers are urged to provide the maximum practicable capacity in excess of this vision field. Issued in Seattle, Washington, on March 29, 1990.

Darrell M. Pederson,

Assistant Manager, Transport Airplane Directorate, Aircraft Certification Service.

[FR Doc. 90–9927 Filed 4–27–90; 8:45 am]

BILLING CODE 4910–13–M

Research and Special Programs Administration

[Docket No. IRA–51]

National Solid Wastes Management Association; Application for Inconsistency Ruling Concerning the Uniform Hazardous Waste Manifest of the State of Illinois

AGENCY: Research and Special Programs Administration (RSPA), DOT.

ACTION: Public notice and invitation to comment.

SUMMARY: The National Solid Wastes Management Association, Washington, DC, has applied for an administrative ruling determining whether the Uniform Hazardous Waste Manifest of the State of Illinois is inconsistent with the Hazardous Materials Transportation Act (HMTA) and the Hazardous Materials Regulations (HMR) issued thereunder and, therefore, is preempted under section 112(a) of the HMTA.

DATES: Comments received on or before June 22, 1990, and rebuttal comments received on or before August 10, 1990, will be considered before an administrative ruling is issued by the Director of the Office of Hazardous Materials Transportation (OHMT). Rebuttal comments may discuss only those issues raised by comments submitted during the initial comment period and may not discuss new issues.

ADDRESSES: The application and any comments received may be reviewed in the Dockets Unit, Research and Special Programs Administration, room 8419, Nassif Building, 400 Seventh Street SW., Washington, DC 20590–0001. Comments and rebuttal comments on the application may be submitted to the Dockets Unit at the above address, and should include the Docket Number (IRA–51). Three copies are requested. A copy of each comment and rebuttal comment must also be sent to John H. Turner, Esq., Association Counsel, National Solid Wastes Management Association, 1730 Rhode Island Avenue NW., Suite 1000, Washington, DC 20036, and to Mr. William C. Child, Director, Division of Land Pollution Control, Illinois Environmental Protection Agency, P.O. Box 19276, Springfield, IL 62794–9276. A certification that a copy has been sent to each person must also be included with the comment. (The following format is suggested: "I hereby certify that copies of this comment have been sent to Mr. Turner and Mr. Child at the addresses specified in the **Federal Register**.")

FOR FURTHER INFORMATION CONTACT: Mr. Edward H. Bonekemper, III, Senior Attorney, Office of the Chief Counsel, Research and Special Programs Administration, 400 Seventh Street SW., Washington, DC 20590, telephone number 202–366–4400.

SUPPLEMENTARY INFORMATION:

1. Background

The HMTA (49 U.S.C. App. 1801–1811), at section 112(a) (49 U.S.C. App. 1811(a)) expressly preempts "any requirement, of a State or political subdivision, thereof, which is inconsistent with any requirement" of the HMTA or the HMR issued thereunder.

Procedural regulations implementing section 112(a) of the HMTA and providing for the issuance of inconsistency rulings are codified at 49 CFR 107.201 through 107.211. An inconsistency ruling is an advisory administrative opinion as to the relationship between a state or political subdivision requirement and a requirement of the HMTA or HMR. Section 107.209(c) sets forth the following factors which are considered in determining whether a state or local requirement is inconsistent:

(1) Whether compliance with both the state or local requirement and the HMTA or HMR is possible (the "dual compliance" test); and

(2) The extent to which the state or local requirement is an obstacle to the accomplishment and execution of the HMTA and the HMR (the "obstacle" test).

Inconsistency rulings do not address the issues of preemption under the Commerce Clause of the Constitution or under statutes other than the HMTA.

In issuing its advisory inconsistency rulings concerning preemption under the HMTA, OHMT is guided by the principles enunciated

in Executive Order No. 12,612 entitled "Federalism" (52 FR 41685, Oct. 30, 1987). Section 4(a) of that Executive Order authorizes preemption of state laws only when the statute contains an express preemption provision, there is other firm and palpable evidence of Congressional intent to preempt, or the exercise of state authority directly conflicts with the exercise of Federal authority. The HMTA, of course, contains an express preemption provision, which OHMT has implemented through regulations and interpreted in a long series of inconsistency rulings beginning in 1978.

2. The Application for Inconsistency Ruling

On April 12, 1990, the National Solid Wastes Management Association (NSWMA), through its Association Counsel, applied for an inconsistency ruling concerning the Uniform Hazardous Waste Manifest promulgated by the Illinois Environmental Protection Agency (Illinois Manifest). A copy of the Illinois Manifest is reproduced as appendix A to this Notice.

NSWMA states that it is a non-profit trade association representing about 2,500 private firms concerned with the collection, transport, management, and disposal of hazardous, solid and infectious waste and refuse. It also states that its Chemical Waste Transportation Institute consists of members who transport hazardous waste by truck and rail from generators to disposal sites and that a number of those members operate in Illinois.

NSWMA requests that the Illinois Manifest be found inconsistent with, and thus preempt by, the HMTA and the HMR. It asserts that the Illinois Manifest cannot be reconciled with the Uniform Hazardous Waste Manifest (Uniform Manifest) adopted in a joint rulemaking by the Department of Transportation (DOT) and the Environmental Protection Agency (EPA). 49 FR 10490, Mar. 20, 1984.

NWSMA says that the purpose of the Uniform Manifest was to eliminate considerable confusion and unnecessary paperwork engendered by numerous, often conflicting manifests prepared by various states. It says that, prior to promulgation of the Uniform Manifest, transporters carrying hazardous wastes through several states often had to prepare and carry several different manifests for the same shipment.

It contends that states now may require use of their own manifests in lieu of the Uniform Manifest but that such manifests may not require additional or different information other than what is permitted on the Uniform Manifest. It further contends that the HMR, specifically 49 CFR 171.3(c)(3) and 172.205 (53 FR 45089, Nov. 8, 1988), deems stated manifests which differ from the Uniform Manifest to be inconsistent with the HMR. It argues that the Illinois Manifest is inconsistent on this basis.

In addition, the NSWMA argues that the Illinois Manifest is an obstacle to the accomplishment and execution of the purposes and objectives of the HMTA. In support of this argument, it cites two inconsistency rulings (IR's) concerning state information and documentation requirements: IR-4, 47 FR 1231, Jan. 11, 1982; Decision on Appeal, 47 FR 33357, Aug. 2, 1982; correction, 47 FR 34074, Aug. 5, 1982 (invalidating Washington State requirement for red-bordered shipping papers); IR-19, 52 FR 2440H, June 30, 1987; correction, 52 FR 29468, Aug. 7, 1987; Decision on Appeal, 53 FR 11600, Apr. 7, 1988 ("in summary, the HMTA and the HMR provide sufficient information and documentation requirements for the safe transportation of hazardous materials; state and local requirements in excess of them constitute obstacles to implementation of the HMTA and HMR and thus are inconsistent with them.")

The Applicant also argues that the Illinois Manifest is inconsistent because it may cause confusion on the part of transporters, it contains requirements different from those of other states, and its continued existence may encourage other states to adopt manifests differing from the Uniform Manifest. For the proposition that the mere possibility that disparate requirements could be imposed by other states mandates a finding of inconsistency, it cites IR-5, 47 FR 51991, Nov. 18, 1982; IR-14, 49 FR 46656, Nov. 27, 1984; and IR-15, 49 FR 46660, Nov. 27, 1984, Decision on Appeal, 52 FR 13062, Apr. 20, 1987.

In support of its contention that the Illinois Manifest is inconsistent with, and differs substantially from, the Uniform Manifest requirements of 40 CFR 262.20, NSWMA cites several alleged differences:

(1) Although the Federal requirement is that gallons be indicated by the symbol "G" and cubic yards by the symbol "Y", the Illinois Manifest requires gallons to be designated by the number "1" and cubic yards by the number "2" and also instructs that "no other unit is to be used."

(2) Although the Federal requirement is that the total quantity of waste be entered in Item 13, Illinois expressly forbids the use of decimals or fractions to describe the total quantities of waste. The State also requires that quantities must be rounded to the nearest whole number—a requirement not on the Uniform Manifest. NSWMA says that these two different Illinois provisions could lead to the strange result that a transporter hauling one drum of 0.3 cubic yards of hazardous waste would be compelled to report a "0" total quantity of waste on the Illinois Manifest—a different result than would appear on the Uniform Manifest.

(3) "The Illinois manifest also rejects the Uniform Manifest's approach to the use of Continuation Sheets (EPA Form 8700-22A). 40 CFR 262.20 requires the use of Form 8700-22A if 'more space is required for the U.S. description and related information [contained in] Item 11 of [the manifest]' or if more than two transporters are to be used to transport the waste. The Illinois manifest, however, abandons use of the federally-mandated continuation sheets, instead requiring that generators who would otherwise prepare Form 8700-22A complete a separate manifest form. The DOT-EPA Uniform Manifest requirement does not permit states to utilize a 'second manifest' requirement in lieu of the continuation sheet, which is intended to be attached to the Uniform Manifest form."

NSWMA concludes that these alleged discrepancies are "flatly contrary" to the requirements of the Uniform Manifest and thus are inconsistent with the HMR under the "obstacle" test—especially in light of the legislative history of the HMTA's preemption language and prior RSPA statements indicating that the comprehensiveness of the HMR "severely restricts the scope of historically premissible State or local activity." General Preamble to IR's 7 through 15, 49 FR 46632-3 (Nov. 24, 1984).

3. Public Comment

Comments should be limited to the issue of whether the Illinois Uniform Hazardous Waste Manifest is consistent or inconsistent with the HMTA and the HMR. Comments would specifically address the "dual compliance" and "obstacle" tests described in the "Background" section.

Persons intending to comment on the application should examine the complete application in the RSPA Dockets Unit, appendix A to this Notice, and the procedures governing the Department's consideration of applications for inconsistency rulings found at 49 CFR 107.201—107.211.

Issued in Washington, DC on April 19, 1990.

Alan I. Roberts,

Director, Office of Hazardous Materials Transportation.

BILLING CODE 4910-60-M

STATE OF ILLINOIS

ENVIRONMENTAL PROTECTION AGENCY DIVISION OF LAND POLLUTION CONTROL

P.O. BOX 19276 SPRINGFIELD, ILLINOIS 62794-9276 (217) 782-6761

State Form LPC 62 8/81 IL532-0610

FOR SHIPMENT OF HAZARDOUS, INFECTIOUS AND SPECIAL WASTE.

NOTE: FORM DESIGNED TO PRINT 8 LINES PER INCH.

EPA Form 8700-22 (Rev. 6-89) Form Approved. OMB No. 2050-0039, Expires 9-30-91

UNIFORM HAZARDOUS WASTE MANIFEST

1. Generator's US EPA ID No. | Manifest Document No.

2. Page 1 of

Information in the shaded areas is not required by Federal law, but is required by Illinois law.

3. Generator's Name and Mailing Address | Location If Different:

A. Illinois Manifest Document Number IL4233195 MANIFEST FEE PAID

B. Illinois Generator's ID

4. Generator's Phone( )

5. Transporter 1 Company Name | 6. US EPA ID Number

C. Illinois Transporter's ID

D. ( ) Transporter's Phone

7. Transporter 2 Company Name | 8. US EPA ID Number

E. Illinois Transporter's ID

F. ( ) Transporter's Phone

9. Designated Facility Name and Site Address | 10. US EPA ID Number

G. Illinois Facility's ID

H. Facility's Phone ( )

GENERATOR

11. US DOT Description (Including Proper Shipping Name, Hazard Class, and ID Number)	12. Containers No.	Type	13. Total Quantity	14. Unit Wt/Vol	I. Waste No.
a.					EPA HW Number XX / Authorization Number
b.					EPA HW Number XX / Authorization Number
c.					EPA HW Number XX / Authorization Number
d.					EPA HW Number XX / Authorization Number

J. Additional Descriptions for Materials Listed Above

K. Handling Codes for Wastes Listed Above In Item # 14

1 = Gallons 2 = Cubic Yards

15. Special Handling Instructions and Additional Information

16. GENERATOR'S CERTIFICATION: I hereby declare that the contents of this consignment are fully and accurately described above by proper shipping name and are classified, packed, marked, and labeled, and are in all respects in proper condition for transport by highway according to applicable international and national government regulations.

If I am a large quantity generator, I certify that I have a program in place to reduce the volume and toxicity of waste generated to the degree I have determined to be economically practicable and that I have selected the practicable method of treatment, storage, or disposal currently available to me which minimizes the present and future threat to human health and the environment; OR, if I am a small quantity generator, I have made a good faith effort to minimize my waste generation and select the best waste management method that is available to me and that I can afford.

Printed/Typed Name | Signature | Date Month Day Year

TRANSPORTER

17. Transporter 1 Acknowledgement of Receipt of Materials

Printed/Typed Name | Signature | Date Month Day Year

18. Transporter 2 Acknowledgement of Receipt of Materials

Printed/Typed Name | Signature | Date Month Day Year

FACILITY

19. Discrepancy Indication Space

20. Facility Owner or Operator: Certification of receipt of hazardous materials covered by this manifest except as noted in item 19.

Printed/Typed Name | Signature | Date Month Day Year

In case of a spill call the Illinois Office of Emergency Response at 217/782-3637 and the National Response Center at 800/424-8802 or 202/426-2675.

This Agency is authorized to require, pursuant to Illinois Revised Statutes, Chapter 111½ Section 21, that this information be submitted to the Agency. Failure to provide the information may result in a civil penalty against the owner or operator of not to exceed $25,000 per day of violation. Falsification of this information may result in a fine up to $50,000 per day of violation and imprisonment up to 5 years. This form has been approved by the Forms Management Center.

COPY 1. TSD MAIL TO GENERATOR

The Illinois Uniform Manifest must be used for all shipments of special waste (hazardous and non-hazardous) stored, disposed of, treated, or reclaimed in Illinois; and for all shipments originating in Illinois and destined for states that do not print and supply the form. For shipments not originating in Illinois, if the generator's state requires copies of the manifest, a photocopy of part 1 should be used.

INSTRUCTIONS TO GENERATORS (Please type)

(1) Enter generator's USEPA twelve digit identification number and the unique five digit document number assigned to this Manifest (eg. 00001) by the generator.

(2) Enter total number of pages comprising this Manifest.

(3) Enter generator's name and mailing address. If location of waste generation is different from mailing address, enter location to the right of mailing address.

(4) Enter telephone number where an authorized agent of the generator, who has knowledge of the waste, may be reached in the event of an emergency.

(B) Enter the generator's Illinois EPA ten digit identification number.

(5,6,C,D) For the first transporter who will transport the waste, enter the company name, US EPA ID number, Illinois EPA four digit Special Waste Hauling (SWH) permit number, and telephone number where an authorized agent of the transporter may be reached in the event of an emergency.

(7,8,E,F) If applicable, enter the information requested for the second transporter who will transport the waste. If more than two transporters are used, use a second manifest and in Section 15 of the second manifest enter "Continuation of Manifest Number xxxxxxx" (from Section A).

(9,10,G,H) For the facility designated to receive the waste, enter company name, address, US EPA ID number, Illinois EPA ten digit facility code number, and telephone number where an authorized agent of the receiving facility may be reached.

(11) Enter the US DOT Proper Shipping Name, Hazard Class, and ID number (NA/UN number) for each waste as identified in 49 CFR 171 through 177. For wastes not regulated as Hazardous Materials by DOT, enter a description of the waste and the generic name of the waste, plus the phrase "not hazardous by DOT." If more than four waste streams are in a shipment, complete a second manifest.

(12) Enter the number of containers for each waste and the appropriate abbreviations for the type of container:

CM	=	Metal boxes or roll-offs	DM	=	Metal drums
CW	=	Wooden boxes	DW	=	Wooden drums
CF	=	Fiberboard or plastic boxes	DF	=	Fiberboard or plastic drums
BA	=	Burlap, cloth, paper or plastic bags	CY	=	Cylinders
DT	=	Dump trucks			
TC	=	Tank cars	TT	=	Tank trucks
			TP	=	Tanks portable

(13) Enter the total quantity (gallons or cubic yards) of each waste; do not use decimals or fractions.

(14) Enter 1 if quantity is in gallons or 2 if quantity is in cubic yards. No other unit is to be used. to track weight if desired, enter pounds, tons, or kilograms in Section J.

(I) Enter the EPA 4 digit Hazardous Waste Number; if waste is a mixture of listed and characteristic wastes, the listed waste must be entered - - other numbers should be listed in Section J. For non-hazardous special wastes, enter NA. Enter the Illinois EPA six digit waste stream permit (authorization) number for the waste stream (these numbers are specific for each waste stream and companies) [leave blank for waste going out of Illinois].

(J,K) If needed, enter additional description or information/instructions for the material listed in item 11.

(15) If needed, indicate special transportation, treatment, storage, or disposal information, or Bill of Lading information. For international shipments, generators must enter the point of departure (City and State) for shipments destined for treatment, storage, or disposal outside the jurisdiction of the United States in this space.

(16) The generator must read, sign (by hand), and date the certification statement. If a mode other than highway is used, the word "highway" should be lined out and the appropriate mode (rail, water, or air) inserted in the space below. If another mode in addition to highway is used, enter the appropriate additional mode.

GENERATOR: RETAIN COPY 6 AND MAIL COPY 5 TO IEPA WITHIN 2 DAYS OF THE SHIPMENT

INSTRUCTIONS TO TRANSPORTER: (17,18) The person accepting the waste on behalf of the transporter must acknowledge acceptance of the waste described on the Manifest by signing and entering the date of receipt. UPON DELIVERY OF WASTE TO FACILITY, retain copy 4 and leave remaining copies with the facility owner/operator.

INSTRUCTIONS TO OWNERS AND OPERATORS OF TREATMENT, STORAGE, OR DISPOSAL FACILITIES:

(19) The authorized representative of the designated (or alternate) facility's owner or operator must note in Item 19 any significant discrepancy (as defined in 35 Ill. Adm. Code 725.172) between the waste described on the Manifest and the waste actually recieved at the facility. Reference the discrepancy by line A, B, C, or D.

(20) Print or type name of the person accepting the waste on behalf of the owner or operator of the facility. That person must acknowledge acceptance of the waste by signing and entering the date of receipt.

Retain copy 3, send copy 1 to the generator, and send copy 2 to Illinois EPA (within 30 days of the delivery).

Public reporting burden for this collection of information is estimated to average: 37 minutes for generators, 15 minutes for transporters, and 10 minutes for treatment, storage and disposal facilities. This includes time for reviewing instructions, gathering data, and completing and reviewing the forms.

Send comments regarding the burden estimate, including suggestions for reducing this burden, to: Chief, Information Policy Branch, PM-223, U.S. Environmental Protection Agency, 401 M Street SW., Washington, DC 20480; and to the Office of Information and Regulatory Affairs, Office of Management and Budget, Washington, DC 20503.

[FR Doc. 90-9915 Filed 4-27-90; 8:45 am]

BILLING CODE 4910-60-C

Urban Mass Transportation Administration

UMTA Section 3 and 9 Grant Obligations

AGENCY: Urban Mass Transportation Administration (UMTA), DOT.

ACTION: Notice.

SUMMARY: The Department of Transportation and Related Agencies Appropriations Act, 1990, Public Law 101–164, signed into law by President George Bush on November 21, 1989, contained a provision requiring the Urban Mass Transportation Administration to publish an announcement in the **Federal Register** every 30 days of grants obligated pursuant to section 3 and 9 of the Urban Mass Transportation Act of 1964, as amended. The statute requires that the announcement include the grant number, the grant amount, and the transit property receiving each grant. This notice provides the information as required by statute.

FOR FURTHER INFORMATION CONTACT: Edward R. Fleischman, Director, Office of Capital and Formula Assistance, Department of Transportation, Urban Mass Transportation Administration, Office of Grants Management, 400 Seventh Street SW., room 9301, Washington, DC 20590, (202) 366–1662

SUPPLEMENTARY INFORMATION: The section 3 program was established by the Urban Mass Transportation Act of 1964 to provide capital assistance to eligible recipients in urban areas. Funding for this program is distributed on a discretionary basis. The Section 9 formula program was established by the Surface Transportation Assistance Act of 1982. Funds appropriated to this program are allocated on a formula basis to provide capital and operating assistance in urbanized areas. Pursuant to the statute UMTA reports the following grant information:

SECTION 3 GRANTS

Transit property	Grant No.	Grant amount	Obligation date
Alabama Highway Deparment, Alabama	AL–03–0008–00	$1,999,998	03/20/90
Los Angeles County Transportation Commission, Los Angeles, CA	CA–03–0130–07	329,668,113	04/10/90
Municipal Railway, San Francisco, CA	CA–03–0347–00	10,939,560	12/29/89
Municipal Railway, San Francisco, CA	CA–03–0352–00	10,072,500	12/29/89
Metropolitan Transit Development Board, San Diego, CA	CA–03–0350–00	1,380,000	02/12/90
Kansas Department of Transportation, Topeka, KS	KS–03–0010–00	168,750	04/6/90
Regional Transit Authority, New Orleans, LA	LA–03–0044–03	5,764,053	04/13/90
Berks Area Reading Transportation Authority Reading, PA	PA–03–0210–00	1,581,000	04/6/90
Municipality of Anchorage, Anchorage, AK	AK–90–X007–00	$798,661	03/30/90
Birmingham-Jefferson County Transit Authority, Birmingham, AL	AL–90–X021–01	163,964	03/30/90
Alabama Highway Department, Alabama	AL–90–X043–01	288,675	03/30/90
Montgomery Area Transit System, Montgomery, AL	AL–90–X044–01	208,000	03/30/90
Birmingham-Jefferson County Transit Authority, Birmingham, AL	AL–90–X047–00	208,000	03/30/90
Arkansas State Highway and Transportation Department, Arkansas	AR–90–X020–00	2,343,556	03/30/90
Metroplan, Little Rock-N.Little Rock, AR	AR–90–X022–00	100,000	03/30/90
City of Simi Valley, Simi Valley, CA	CA–90–X355–00	524,850	03/30/90
City of Vallejo, San Francisco-Oakland, CA	CA–90–X358–00	622,483	01/04/90
City of Culver City, Los Angeles-Long Beach, CA.	CA–90–X362–00	480,000	03/30/90
City of Corona, San Bernardino-Riverside, CA	CA–90–X363–00	158,000	03/30/90
Omnitrans, San Bernardino-Riverside, CA	CA–90–X365–00	2,999,951	03/30/90
Long Beach Public Transportation Company, Los Angeles-Long Beach, CA.	CA–90–X366–00	5,452,000	03/30/90
Central Contra Costa Transit Authority, San Francisco-Oakland, CA	CA–90–X367–00	1,580,002	03/30/90
Caltrans, San Francisco-Oakland, CA	CA–90–X370–00	10,330,800	03/30/90
Golden Gate Bridge, Highway and Transportation District, San Francisco-Oakland, CA.	CA–90–X373–00	9,355,163	03/30/90
San Mateo County Transit District, San Francisco-Oakland, CA	CA–90–X378–00	1,475,015	03/29/90
City of Gardena, Los Angeles-Long Beach, CA	CA–90–X386–00	533,440	03/30/90
San Diego Association of Governments, San Diego, CA	CA–90–X388–00	400,000	03/30/90
City of Fairfield, Fairfield, CA	CA–90–X391–00	256,000	03/30/90
City of Napa, Napa, CA	CA–90–X392–00	547,970	03/30/90
Regional Transportation District, Denver, CO	CO–90–X052–00	13,042,866	03/30/90
City of Colorado Springs, Colorado Springs, CO	CO–90–X053–00	2,159,277	03/30/90
Connecticut Department of Transportation, Connecticut	CT–90–X159–00	8,966,307	03/30/90
Middletown Transit District, Danbury, CT–NY	CT–90–X160–00	1,140,448	03/30/90
Connecticut Department of Transportation, Connecticut	CT–90–X161–00	1,052,980	03/30/90
Norwalk Transit District, Norwalk, CT	CT–90–X162–00	403,000	03/30/90
Housatonic Area Regional Transit District, Danbury, CT–NY	CT–90–X163–00	80,800	03/30/90
Washington Metropolitan Area Transit Authority, Washington, DC–MD–VA.	DC–90–X014–00	16,069,593	03/30/90
Pinellas Suncoast Transit Authority, St. Petersburg, FL	FL–90–X146–00	587,838	03/30/90
Jacksonville Transportation Authority, Jacksonville, FL	FL–90–X148–00	5,239,665	03/30/90
Atanta Regional Commission, Atlanta, GA	GA–90–X055–00	231,068	03/30/90
City of Bettendorf, Davenport-Rock Isl-MO, IA.-IL	IA–90–X105–00	215,015	03/30/90
City of Davenport, Davenport-Rock Isl-MO, IA.-IL	IA–90–X111–00	625,000	03/30/90
City of Decatur, Decatur, IL	IL–90–X152–00	1,033,670	03/30/90
Rockford Mass Transit District, Rockford, IL	IL–90–X155–00	836,400	03/05/90
Springfield Mass Transit District, Dubuque, IA.-IL	IL–90–X156–00	715,100	03/30/90
Rock Island County Metropolitan Mass Transit District, Davenport-Rock Isl-MO, IA.-IL.	IL–90–X157–00	985,801	03/30/90
Regional Transportation Authority, Chicago, IL.-Northwestern IN	IL–90–X158–00	49,946,848	03/30/90
Chicago Transit Authority, Chicago, IL.-Northwestern IN	IL–90–X160–00	26,771,410	03/30/90
Loves Park Transit System, Rockford, IL	IL–90–X161–00	85,088	03/30/90
City of Terre Haute, Terre Haute, IN	IN–90–X133–00	522,000	03/30/90
Muncie Public Transportation Corporation, Muncie, IN	IN–90–X134–00	571,722	03/30/90
City of Anderson, Anderson, IN	IN–90–X135–00	411,498	03/30/90
South Bend Public Transportation Corporation, South Bend, IN.-MI	IN–90–X136–00	1,431,030	03/30/90

SECTION 3 GRANTS—Continued

Transit property	Grant No.	Grant amount	Obligation date
Bloomington Public Transportation Corporation, Bloomington-Normal, IN.	IN-90-X138-00	464,412	03/30/90
Johnson County Transit, Kansas City, MO.-KS	KS-90-X036-00	200,000	02/26/90
Johnson County Transit, Kansas City, MO.-KS	KS-90-X042-00	370,075	03/30/90
Wichita Metropolitan Transit Authority, Wichita, KS	KS-90-X043-00	1,829,669	03/30/90
Transit Authority of River City, Louisville, KY.-IN	KY-90-X047-00	7,108,198	03/06/90
St. Bernard Parish, New Orleans, LA	LA-90-X104-00	219,000	03/30/90
Berkshire Regional Transit Authority, Pittsfield, MA	MA-90-X089-01	26,493	03/30/90
Lowell Regional Transit Authority, Lowell, MA.-NH	MA-90-X097-01	44,800	02/08/90
Cape Ann Transportation Authority, Boston, MA	MA-90-X106-00	111,750	03/30/90
Brockton Area Transit Authority, Brockton, MA	MA-90-X107-00	1,240,550	03/30/90
Greater Attleboro-Taunton Regional Transit Authority, Providence-Paw-War, MA.-RI.	MA-90-X108-00	1,172,000	03/30/90
Berkshire Regional Transit Authority, Pittsfield, MA	MA-90-X109-00	445,535	03/30/90
Berkshire County Regional Planning Commission, Pittsfield, MA	MA-90-X110-00	20,000	03/30/90
Maine Department of Transportation, Maine	ME-90-X048-01	106,729	03/30/90
Greater Portland Transit District, Portland, ME	ME-90-X049-00	375,846	03/30/90
Suburban Mobility Authority for Regional Transportation, Detroit, MI	MI-90-X117-00	306,836	03/30/90
Battle Creek Transit System, Battle Creek, MI	MI-90-X129-00	405,525	03/30/90
Bay County Metropolitan Transportation Authority, Bay City, MI	MI-90-X130-00	531,563	03/30/90
City of East Grand Forks, Grand Forks, MN	MN-90-X044-00	65,900	03/30/90
Duluth Transit Authority, Duluth-Superior, MN.-WI	MN-90-X045-00	441,000	03/30/90
St. Cloud Metropolitan Transit Commission, St. Cloud, MN	MN-90-X046-00	367,122	03/30/90
Metropolitan Transit Commission, Minneapolis-St. Paul, MN	MN-90-X047-00	14,004,296	03/30/90
City of St. Charles, St. Charles, MO	MO-90-X066-00	46,200	03/30/90
City of Jackson, Jackson, MS	MS-90-X031-00	48,000	03/30/90
Gulf Regional Planning Commission, Biloxi-Gulfport, MS	MS-90-X032-00	92,920	03/30/90
City of Grand Forks, Grand Forks, ND	ND-90-X020-00	432,200	03/30/90
City of Fargo, Fargo-Moorhead, N.D.-MN	ND-90-X021-00	792,763	03/30/90
Omaha Metro Area Transit, Omaha, NE.-IA	NE-90-X025-00	3,201,252	03/30/90
Delware River Port Authority, Philadelphia, PA.-NJ	NJ-90-X030-00	2,361,788	03/30/90
New York Metropolitan Transportation Authoirty, New York, N.Y.-Northeastern NJ.	NY-90-X171-01	29,129,268	03/30/90
Rochester-Genesee Regional Transportation Authority, Rochester, NY.	NY-90-X177-00	4,285,004	03/30/90
Capital District Transportation Authority, Albany-Schenectady-Troy, NY.	NY-90-X178-00	6,030,080	03/30/90
Ohio Department of Transportation, Columbus, OH	OH-90-X124-01	843,243	03/30/90
Portage Area Regional Transportation Authority, Akron, OH	OH-90-X126-00	669,012	03/30/90
Salem, Area Mass Transit District, Salem, OR	OR-90-X034-00	948,108	03/30/90
Westmoreland County Transit Authority, Pittsburgh, PA	PA-90-X182-00	265,904	03/30/90
Cambria County Transit Authority, Johnstown, PA	PA-90-X183-00	563,930	03/29/90
City of Washington, Pittsburgh, PA	PA-90-X184-00	249.395	03/29/90
Erie Metropolitan Transit Authority, Erie, PA	PA-90-X185-00	616,800	03/29/90
Municipality of Rio Grande, Sna Juan, PR	PR-90-X055-00	532,000	03/30/90
Rhode Island Department of Transportation, Providence-Paw-War, MA-RI.	RI-90-X014-01	4,623,327	02/07/90
Greenville Transit Authority, Greenville, SC	SC-90-X027-02	338,042	03/30/90
Central Midlands Regional Planning Council, Columbia, SC	SC-90-X032-01	394,250	03/30/90
Knoxville Transportation Authority, Knoxville, TN	TN-90-X081-00	1,375,840	02/27/90
City of Bristol, Bristol, TN-VA	TN-90-X082-00	159,200	03/29/90
City of Clarksville, Clarksville, TN-KY	TN-90-X083-00	54,400	03/29/90
Metropolitan Transit Authority of Harris County, Houston, TX	TX-90-X176-00	21,773,412	03/26/90
City of Sherman, Sherman-Denison, TX	TX-90-X180-00	52,916	03/30/90
Via Metropolitan Transit Authority, San Antonio, TX	TX-90-X181-00	7,448,907	03/30/90
Sun Metro, El Paso, TX	TX-90-X183-00	3,125,263	03/30/90
Capital Metropolitan Transportation Authority, Austin, TX	TX-90-X184-00	3,516,771	03/30/90
City of Beaumont, Beaumont, TX	TX-90-X185-00	1,425,000	03/30/90
Utah Transit Authority, Salt Lake City, UT	UT-90-X014-00	7,998,735	03/30/90
Tidewater Transportation District Commission, Norfold-Portsmouth, VA.	VA-90-X063-01	88,000	03/29/90
City of Appleton, Appleton, WI	WI-90-X101-01	48,839	03/30/90
Janesville City Planning Department, Janesville, WI	WI-90-X102-02	24,432	03/30/90
City of Lacrosse, La Crosse, WI-MN	WI-90-X111-00	475,001	03/30/90
City of Beloit, Beloit, WI-IL	WI-90-X113-02	122,553	03/30/90
City of Wausau, Wausau, WI	WI-90-X117-00	295,924	03/30/90
City of Appleton, Appleton, WI	WI-90-X118-00	1,114,226	03/30/90
Janesville City Planning Department, Janesville, WI	WI-90-X119-00	576,904	03/30/90
City of Madison, Madison, WI	WI-90-X120-00	1,460,632	03/30/90
City of Green Bay, Green Bay, WI	WI-90-X121-00	772,840	03/30/90
Oshkosh Transit System, Oshkosh, WI	WI-90-X122-00	454,481	03/30/90
City of Superior, Duluth-Superior, MN-WI	WI-90-X123-00	127,000	03/30/90
Kanawha Valley Regional Transportation Authority, Charleston, WV	WV-90-X034-01	916,856	03/29/90

Issued on: April 20, 1990.

Brian W. Clymer,

Administrator.

[FR Doc. 90-9913 Filed 4-27-90; 8:45 am]

BILLING CODE 4910-57-M

DEPARTMENT OF THE TREASURY

Public Information Collection Requirements Submitted to OMB for Review

April 23, 1990.

The Department of Treasury has made revisions and resubmitted the following public information collection requirement(s) to OMB for review and clearance under the Paperwork Reduction Act of 1980, Public Law 96-511. Copies of the submission(s) may be obtained by calling the Treasury Bureau Clearance Officer listed. Comments regarding this information collection should be addressed to the OMB reviewer listed and to the Treasury Department Clearance Officer, Department of the Treasury, room 3171 Treasury Annex, 1500 Pennsylvania Avenue NW., Washington, DC 20220.

Internal Revenue Service

OMB Number: 1545-0026.

Form Number: IRS Form 926.

Type of Review: Resubmission.

Title: Return by a Transferor of Property to a Foreign Corporation, Foreign Estate or Trust, or Foreign Partnership.

Description: U.S. Persons file Form 926 to report the transfer of property to a foreign entity. An excise tax is imposed unless the transfer is not taxable. The form is also used to report section 6038B information. IRS uses Form 926 to determine if the correct excise tax has been paid and if any of the exceptions to the imposition of tax are correctly applied.

Respondents: Individuals, Businesses or other for-profit.

Estimated Number of Respondents/Recordkeepers: 1,000.

Estimated Burden Hours Per Response/Recordkeeping:

Recordkeeping—7 hrs., 25 mins.

Learning about the law or the form—2 hrs., 36 mins.

Preparing and sending the form to IRS—3 hrs., 14 mins.

Frequency of Response: On occasion.

Estimated Total Recordkeeping/Reporting Burden: 13,620 hours.

Clearance Officer: Garrick Shear, (202) 535-4297, Internal Revenue Service, room 5571, 1111 Constitution Avenue NW., Washington, DC 20224.

OMB Reviewer: Milo Sunderhauf, (202) 395-6880, Office of Management and Budget, room 3001, New Executive Office Building, Washington, DC 20503.

Lois K. Holland,

Departmental Reports, Management Officer.

[FR Doc. 90-9949 Filed 4-27-90; 8:45 am]

BILLING CODE 4830-01-M

[Number: 175-01]

Delegation of Authority to the Office of Thrift Supervision

April 17, 1990.

By virtue of the authority vested in me as Secretary of the Treasury, including the authority which I have pursuant to section 301 of the Financial Institutions, Reform, Recovery, and Enforcement Act of 1989, I hereby delegate to the Director of the Office of Thrift Supervision all authority of the Secretary of the Treasury to ratify actions taken on behalf of, or in the name of, the Office of Thrift Supervision or its Director before April 9, 1990.

Nicholas F. Brady,

Secretary of the Treasury.

[FR Doc. 90-9948 Filed 4-27-90; 8:45 am]

BILLING CODE 4810-25-M

Office of Thrift Supervision

Enterprise Federal Savings, F.S.A.; Appointment of Conservator

Notice is hereby given that, pursuant to the authority contained in section 5 (d)(2)(B) and (H) of the Home Owners' Loan Act of 1933, as amended by section 301 of the Financial Institutions Reform, Recovery and Enforcement Act of 1989, the Office of Thrift Supervision has duly appointed the Resolution Trust Corporation as sole Conservator for Enterprise Federal Savings, F.S.A., Clearwater, Florida ("Association"), on April 20, 1990.

Dated: April 23, 1990.

By the Office of Thrift Supervision.

Nadine Y. Washington,

Executive Secretary.

[FR Doc. 90-9876 Filed 4-27-90; 8:45 am]

BILLING CODE 6720-01-M

First Savings and Loan Company, F.A.; Appointment of Conservator

Notice is hereby given that, pursuant to the authority contained in section 5 (d)(2) (B) and (H) of the Home Owners' Loan Act of 1933, as amended by section 301 of the Financial Institutions Reform, Recovery and Enforcement Act of 1989, the Office of Thrift Supervision has duly appointed the Resolution Trust Corporation as sole Conservator for First Savings and Loan Company, F.A., Massillon, Ohio ("Association"), on April 20, 1990.

Dated: April 23, 1990.

By the Office of Thrift Supervision.

Nadine Y. Washington,

Executive Secretary.

[FR Doc. 90-9877 Filed 4-27-90; 8:45 am]

BILLING CODE 6720-01-M

Texas Federal Savings Association; Appointment of Conservator

Notice is hereby given that, pursuant to the authority contained in section 5 (d)(2)(B) and (H) of the Home Owners' Loan Act of 1933, as amended by section 301 of the Financial Institutions Reform, Recovery and Enforcement Act of 1989, the Office of Thrift Supervision has duly appointed the Resolution Trust Corporation as sole Conservator for Texas Federal Savings Association, San Antonio, Texas ("Association"), on April 20, 1990.

Dated: April 23, 1990.

By the Office of Thrift Supervision.

Nadine Y. Washington,

Executive Secretary.

[FR Doc. 90-9878 Filed 4-27-90; 8:45 am]

BILLING CODE 6720-01-M

Bedford Savings Association; Appointment of Receiver

Notice is hereby given that, pursuant to the authority contained in section 5 (d)(2)(F) of the Home Owners' Loan Act of 1933, as amended by section 301 of the Financial Institutions Reform, Recovery and Enforcement Act of 1989, the Office of Thrift Supervision has duly appointed the Resolution Trust Corporation as sole Receiver for Bedford Savings Association, Bedford, Texas ("Association"), on April 20, 1990.

Dated: April 23, 1990.

By the Office of Thrift Supervision.

Nadine Y. Washington,

Executive Secretary.

[FR Doc. 90-9882 Filed 4-27-90; 8:45 am]

BILLING CODE 6720-01-M

Enterprise Federal Savings and Loan Association; Appointment of Receiver

Notice is hereby given that, pursuant to the authority contained in section 5 (d)(2)(A) of the Home Owners' Loan Act of 1933, as amended by section 301 of the Financial Institutions Reform, Recovery and Enforcement Act of 1989, the Office of Thrift Supervision has duly

appointed the Resolution Trust Corporation as sole Receiver for Enterprise Federal Savings and Loan Association, Clearwater, Florida ("Association"), on April 20, 1990.

Dated: April 23, 1990.

By the Office of Thrift Supervision.

Nadine Y. Washington,

Executive Secretary.

[FR Doc. 90-9883 Filed 4-27-90; 8:45 am]

BILLING CODE 6720-01-M

First Federal Savings and Loan Association of Hutchinson; Appointment of Receiver

Notice is hereby given that, pursuant to the authority contained in section 5(d)(2)(F) of the Home Owners' Loan Act of 1933, as amended by section 301 of the Financial Institutions Reform, Recovery, and Enforcement Act of 1989, the Office of Thrift Supervision has duly appointed the Resolution Trust Corporation as sole Receiver for First Federal Savings and Loan Association of Hutchinson, Hutchinson, Kansas ("Association"), on April 20, 1990.

Dated: April 23, 1990.

By the Office of Thrift Supervision.

Nadine Y. Washington,

Executive Secretary.

[FR Doc. 90-9879 Filed 4-27-90; 8:45 am]

BILLING CODE 6720-01-M

First Savings and Loan Co.; Appointment of Receiver

Notice is hereby given that, pursuant to the authority contained in section 5(d)(2)(C) of the Home Owners' Loan Act of 1933, as amended by section 301 of the Financial Institutions Reform, Recovery and Enforcement Act of 1989, the Office of Thrift Supervision has duly appointed the Resolution Trust Corporation as sole Receiver for First Savings and Loan Company, Massillon, Ohio ("Association"), on April 20, 1990.

Dated: April 23, 1990.

By the Office of Thrift Supervision.

Nadine Y. Washington,

Executive Secretary.

[FR Doc. 90-9880 Filed 4-27-90; 8:45 am]

BILLING CODE 6720-01-M

Texas Savings and Loan Association; Appointment of Receiver

Notice is hereby given that, pursuant to the authority contained in section 5(d)(2)(C) of the Home Owners' Loan Act of 1933, as amended by section 301 of the Financial Institutions Reform, Recovery and Enforcement Act of 1989, the Office of Thrift Supervision has duly appointed the Resolution Trust Corporation as sole Receiver for Texas Savings and Loan Association, San Antonio, Texas ("Association"), on April 20, 1990.

Dated: April 23, 1990.

By the Office of Thrift Supervision.

Nadine Y. Washington,

Executive Secretary.

[FR Doc. 90-9881 Filed 4-27-90; 8:45 am]

BILLING CODE 6720-01-M

[OTS No. 8174; AC-15]

Laurel Federal Savings Bank, Laurel, MD; Final Action Approval of Conversion Application

April 19, 1990.

Notice is hereby given that on April 12, 1990, the designee of the Chief Counsel, Office of Thrift Supervision, acting pursuant to the authority delegated to him, approved the application of Laurel Federal Savings Bank, Laurel, Maryland, for permission to convert to the stock form of organization. Copies of the application are available for inspection at the Secretariat, Office of Thrift Supervision, 1700 G Street, NW., Washington, DC 20552, and District Director, Office of Thrift Supervision, Atlanta District Office, 1475 Peachtree Street, NE., Atlanta, Georgia 30309.

By the Office of Thrift Supervision.

Nadine Y. Washington,

Executive Secretary.

[FR Doc. 90-9874 Filed 4-27-90; 8:45 am]

BILLING CODE 6720-01-M

[OTS No. 4810; AC-14]

Pioneer Federal Savings Bank, Honolulu, HI; Final Action Approval of Conversion Application

April 19, 1990.

Notice is hereby given that on April 13, 1990, the designee of the Chief Counsel, Office of Thrift Supervision, acting pursuant to the authority delegated to him, approved the application of Pioneer Federal Savings Bank, Honolulu, Hawaii, for permission to convert to the stock form of organization. Copies of the application are available for inspection at the Secretariat, Office of Thrift Supervision, 1700 G Street NW., Washington, DC 20552, and District Director, Office of Thrift Supervision, Seattle District Office, 1501 Fourth Avenue, 19th Floor, Seattle, Washington 98101-1693.

By the Office of Thrift Supervision.

Nadine Y. Washington,

Executive Secretary.

[FR Doc. 90-9875 Filed 4-27-90; 8:45 am]

BILLING CODE 6720-01-M

Sunshine Act Meetings

Federal Register
Vol. 55, No. 83
Monday, April 30, 1990

This section of the FEDERAL REGISTER contains notices of meetings published under the "Government in the Sunshine Act" (Pub. L. 94-409) 5 U.S.C. 552b(e)(3).

CONSUMER PRODUCT SAFETY COMMISSION

TIME AND DATE: Wednesday, May 2, 1990, 10:00 a.m.

LOCATION: Room 556, Westwood Towers, 5401 Westbard Avenue, Bethesda, Maryland.

STATUS: Open to the Public.

MATTERS TO BE CONSIDERED: PPPA Protocol Revisions.

The staff will brief the Commission on a draft proposal to amend the current Poison Prevention Packaging Act protocol for testing child-resistant packaging with children and adults.

For a Recorded Message Containing the Latest Agenda Information, Call: 301-492-5709.

CONTACT PERSON FOR ADDITIONAL INFORMATION: Sheldon D. Butts, Office of the Secretary, 5401 Westbard Ave., Bethesda, Md. 20207, 301-492-6800.

Dated: April 25, 1990.

Sheldon D. Butts,

Deputy Secretary.

[FR Doc. 90-10094 Filed 4-26-90; 12:41 pm]

BILLING CODE 6355-01-M

CONSUMER PRODUCT SAFETY COMMISSION

TIME AND DATE: Thursday, May 3, 1990, 10:00 a.m.

LOCATION: Room 556, Westwood Towers, 5401 Westbard Avenue, Bethesda, Maryland.

STATUS: Closed to the Public.

MATTERS TO BE CONSIDERED: Compliance Status Report.

The staff will brief the Commission on the status of various compliance matters.

For a recorded message containing the latest agenda information, call: 301-492-5709.

CONTACT PERSON FOR ADDITIONAL INFORMATION: Sheldon D. Butts, Office of the Secretary, 5401 Westbard Ave., Bethesda, Md. 20207, 301-492-6800.

Dated: April 25, 1990.

Sheldon D. Butts,

Deputy Secretary.

[FR Doc. 90-10095 Filed 4-26-90; 12:41 pm]

BILLING CODE 6355-01-M

FEDERAL RESERVE SYSTEM BOARD OF GOVERNORS

TIME AND DATE: 2:30 p.m., Friday, May 4, 1990.

PLACE: Marriner S. Eccles Federal Reserve Board Building, C Street entrance between 20th and 21st Streets, NW., Washington, DC 20551.

STATUS: Closed.

MATTERS TO BE CONSIDERED:

1. Personnel actions (appointments, promotions, assignments, reassignments, and salary actions) involving individual Federal Reserve System employees.
2. Any items carried forward from a previously announced meeting.

CONTACT PERSON FOR MORE INFORMATION: Mr. Joseph R. Coyne, Assistant to the Board; (202) 452-3204. You may call (202) 452-3207, beginning at approximately 5 p.m. two business days before this meeting, for a recorded announcement of bank and bank holding company applications scheduled for the meeting.

Dated: April 26, 1990.

Jennifer J. Johnson,

Associate Secretary of the Board.

[FR Doc. 90-10110 Filed 4-26-90; 2:43 pm]

BILLING CODE 6210-01-M

NATIONAL SCIENCE BOARD

DATE AND TIME: May 10, 1990:

1:00 p.m. Closed Session
1:20 p.m. Open Session

PLACE: National Science Foundation, 1800 G Street NW., Room 540, Washington, DC 20550.

STATUS:

Most of this meeting will be open to the public.

Part of this meeting will be closed to the public.

MATTERS TO BE CONSIDERED MAY 10:

Closed Session (1:00 p.m. to 1:20 p.m.)

1. Minutes—March Meeting
2. NSB and NSF Staff Nominees
3. Election of Officers
4. Future NSF Budgets
5. Grants and Contracts—Action Item

Open Session (1:20 p.m. to 2:15 p.m.)

6. Chairman's Report
7. Minutes—March Meeting
8. NSB Calendar of Meetings for 1991
9. Director's Report
10. Annual Report of the Executive Committee
11. Other business

Thomas Ubois,

Executive Officer.

[FR Doc. 90-10111 Filed 4-26-90; 2:43 pm]

BILLING CODE 7555-01-M

RESOLUTION TRUST CORPORATION

Notice of Agency Meeting

Pursuant to the provisions of the "Government in the Sunshine Act" (5 U.S.C. 552b), notice is hereby given that on Tuesday, April 24, 1990, at 2:35 p.m., the Board of Directors of the Resolution Trust Corporation met in closed session to consider: (1) Certain matters relating to the resolution of thrift institutions; (2) matters regarding the Corporation's supervisory activities; and (3) matters regarding the Corporation's internal administration activities.

In calling the meeting, the Board determined, on motion of Director C.C. Hope Jr., (Appointive), seconded by Director Robert L. Clarke (Comptroller of the Currency), concurred in by Chairman L. William Seidman, and Director T. Timothy Ryan, Jr., (Director of the Office of Thrift Supervision), that Corporation business required its consideration of the matters on less than seven days notice to the public; that no earlier notice of the meeting was practicable; that the public interest did not require consideration of the matters in a meeting open to public observation; and that the matters could be considered in a closed meeting by authority of subsections (c)(2), (c)(8), (c)(9)(A)(ii), (c)(9)(B), and (c)(10) of the "Government in the Sunshine Act" (5 U.S.C. 552B).

The meeting was held in the Board Room of the FDIC Building located at 550-17th Street NW., Washington, DC.

Dated: April 25, 1990.

Resolution Trust Corporation.

John M. Buckley, Jr.,

Executive Secretary.

[FR Doc. 90-10013 Filed 4-26-90; 8:45 am]

BILLING CODE 6714-01-M

Corrections

Federal Register
Vol. 55, No. 83
Monday, April 30, 1990

This section of the FEDERAL REGISTER contains editorial corrections of previously published Presidential, Rule, Proposed Rule, and Notice documents. These corrections are prepared by the Office of the Federal Register. Agency prepared corrections are issued as signed documents and appear in the appropriate document categories elsewhere in the issue.

COMMITTEE FOR THE IMPLEMENTATION OF TEXTILE AGREEMENTS

Establishment, Amendment and Cancellation of Import Limits and Sublimits, Amendment of a Restraint Period and Amendment of Visa Requirements for Certain Cotton, Wool and Man-made Fiber Textile Products Produced or Manufactured in the United Mexican States

Correction

In notice document 90-9285 beginning on page 15259 in the issue of Monday, April 23, 1990, make the following corrections:

1. The subject heading should read as set forth above.

2. The file line and billing code were omitted and should read as set forth below:

[FR Doc. 90-9285 Filed 4-20-90; 8:45am]

BILLING CODE 3510-DR-M

BILLING CODE 1505-01-D

DEPARTMENT OF ENERGY

Office of Fossil Energy

[FE Docket No. 90-20-NG]

Boston Gas Co.; Application To Import Natural Gas From Canada

Correction

In notice document 90-9484 beginning on page 17299, in the issue of Tuesday, April 24, 1990, make the following corrections:

1. On page 17299, in the third column, under **DATES**, in the sixth line, "April 24, 1990" should read "May 24, 1990".

2. On page 17300, in the middle of the second column, in the file line, the document number should read "FR Doc. 90-9484".

BILLING CODE 1505-01-D

DEPARTMENT OF THE INTERIOR

Bureau of Land Management

[WY-930-09-4214-10; WYW 115104]

Proposed Withdrawal and Opportunity for Public Meeting; Wyoming

Correction

In notice document 89-6056 beginning on page 11085 in the issue of Thursday, March 16, 1989, make the following corrections:

1. On page 11085, in the third column, in the land description, in the 19th line, "N½SE½SE¼" should read "N½SE¼ SE¼". In the 22nd line, "NE½SE¼" should read "NE¼SE¼".

Editorial Note: The correction document published at 55 FR 14156, April 16, 1990, should be disregarded.

BILLING CODE 1505-01-D

OFFICE OF MANAGEMENT AND BUDGET

Revised Standards for Defining Metropolitan Areas in the 1990's

Correction

In notice document 90-7425 beginning on page 12154 in the issue of Friday, March 30, 1990, make the following corrections:

1. On page 12155, in the second column, in the eighth line, "or" should read "and".

2. On page 12159, in the second column, in the sixth paragraph, in the last line, "commuting" was misspelled.

BILLING CODE 1505-01-D

DEPARTMENT OF TRANSPORTATION

Coast Guard

[CGD 90-021]

Navigation Safety Advisory Council; Meeting

Correction

In notice document 90-9152 appearing on page 15094, in the issue of Friday, April 20, 1990, make the following correction:

In the middle column, in the second complete paragraph, in the last line, the telephone number should read "(202) 267-0357".

BILLING CODE 1505-01-D

federal register

Monday
April 30, 1990

Part II

Department of the Treasury

Bureau of Alcohol, Tobacco, and Firearms

27 CFR Parts 19, 197, 250, and 251

Tax Credit for Wine or Flavor Content of Distilled Spirits Products; Final Rule

DEPARTMENT OF THE TREASURY

Bureau of Alcohol, Tobacco and Firearms

27 CFR Parts 19, 197, 250, and 251

[T.D. ATF-297; Re: Notice No. 625]

RIN 1512-AA05

Tax Credit for Wine or Flavor Content of Distilled Spirits Products

AGENCY: Bureau of Alcohol, Tobacco, and Firearms, Treasury.

ACTION: Final rule, Treasury decision.

SUMMARY: ATF is issuing regulations to implement section 6 of Public Law 96-598 (94 Stat. 3488), as amended by section 5063 of Public Law 100-647 (102 Stat. 3342). This section allows a credit against the tax paid or determined on distilled spirits for alcohol derived from certain wine and flavors. This section also permits the transfer between the bonded premises of distilled spirits plants of distilled spirits bottled for industrial purposes.

EFFECTIVE DATE: June 1, 1990.

FOR FURTHER INFORMATION CONTACT: Dick Langford, Distilled Spirits and Tobacco Branch, (202) 566-7531.

SUPPLEMENTARY INFORMATION:

Background

In January of 1980, the Distilled Spirits Tax Revision Act of 1979 (Subtitle A of Title VIII of the Trade Agreements Act of 1979, Pub. L. 96-39 (93 Stat. 273)) instituted a new system for administering the excise tax on distilled spirits, referred to as the *all-in-bond* method. Under this method, the tax on distilled spirits is paid or determined on the basis of the alcohol content, regardless of the source of the alcohol, after completion of all distilled spirits operations. A result of the change to the *all-in-bond* method is that the alcohol content derived from the wine and flavors in a distilled spirits product is subject to the distilled spirits tax.

In December of 1980, Public Law 96-598 was enacted. Section 6 of the law added section 5010 to the Internal Revenue Code of 1954. This provision restored to wine and flavors the tax status they enjoyed prior to the institution of the *all-in-bond* method of tax determination. It did this by authorizing a credit against the excise tax liability paid or determined under the *all-in-bond* method for the wine and flavors content of distilled spirits.

The credit authorized for wine equals the difference between the distilled spirits tax and the applicable wine tax on the quantity of wine contained in distilled spirits. The credit authorized for flavors equals the distilled spirits tax on the quantity of nonbeverage flavors contained in distilled spirits to the extent that the alcohol derived from these flavors does not exceed 2½ percent of the finished product on a proof gallon basis.

In addition to providing a credit for the wine and flavors content of distilled spirits, section 6 of Public Law 96-598 amended section 5212 of the Internal Revenue Code of 1954 to allow the transfer between the bonded premises of distilled spirits plants of alcohol bottled for industrial purposes.

A. Wine and Flavors Credit

The credit for the wine and flavors content of distilled spirits poses a number of problems. Among these are the calculation of credit for wine content, the application of credit rates to the taxable removal of finished goods, and the verification of credit rates by persons other than the processor who manufactured the product. In Industry Circular 81-8, dated March 27, 1981, ATF provided various guidelines and procedures to resolve these problems. However, in retrospect, ATF believes these guidelines and procedures are unduly cumbersome. Therefore, on March 27, 1987, ATF published a notice of proposed rulemaking (Notice No. 625, 52 FR 9873) containing provisions which would simplify the calculations of net tax rates and the application of those rates to taxable removals.

In response to Notice No. 625, five comments were received from distilled spirits plant proprietors and one from a trade association. The commenters represented Heublein, Inc., Brown-Forman Corporation, Consolidated Distilled Products, Inc., Hiram Walker & Sons, Inc., James B. Beam Distilling Company, and the Distilled Spirits Council of the United States, Inc.

1. Effective Tax Rates

Notice No. 625 proposed a somewhat simplified formula for establishing an effective tax rate in lieu of a credit rate for each proof gallon of distilled spirits containing eligible wine or eligible flavors. The effective tax rate is the net tax rate, after reduction for any credit allowable for the wine and flavors content, at which the tax imposed on distilled spirits is paid or determined.

One comment pointed out that the requirement to express an effective tax rate to the nearest whole cent would deprive a proprietor of the right to take the full 2½ percent tax credit for the flavor content of a product. The effective tax rate for a product deriving 2½ percent of its alcohol content from eligible flavors would equal $12.1875, which would be expressed as $12.19. Accordingly, the final rule allows the effective tax rate to be rounded to any number of decimal places, provided such rate is expressed no less exactly than the rate rounded to the nearest whole cent and that all effective tax rates for all products are consistently expressed with the same degree of exactness.

Another comment observed that Industry Circular 81-8 had suggested calculating a credit rate rather than an effective tax rate and urged that this method be recognized in the final rule. An effective tax rate is merely the complement of the credit rate. That is, the credit rate is equal to the tax rate less the effective tax rate. Once a proprietor has calculated the effective tax rate applicable to a given product, ATF would certainly not object to the further determination of its complement, a credit rate for the product. Regulations require only that records of tax determination (27 CFR 19.761) contain sufficient information to enable ATF officers to determine proof gallons removed at each effective tax rate. For the daily summary record of tax determinations (27 CFR 19.762), the regulations provide the option of summarizing proof gallons at each effective tax rate. Such records, if maintained and summarized in terms of credit rates would satisfy these requirements.

2. Application of Effective Tax Rates

Under the suggested procedures in Industry Circular 81-8, the application of the credit rate to taxable removals necessitated the tracing of taxable removals back to the applicable batch records for each product containing wine or flavors. To alleviate the cumbersome paperwork of such tracing, three alternative procedures for application of effective tax rates to taxable removals were proposed in the notice in addition to the general procedure suggested in the Industry Circular.

a. *Actual effective tax rate.* A proprietor may tax determine spirits at an effective tax rate based on the specific batch of product from which the removal is drawn. To do so, however, requires the ability to trace the product from the record of tax determination back to the batch record. Case serial numbers provide the only means sanctioned by regulations to identify the specific containers and effect the necessary tracing. Therefore it is necessary to record the serial numbers of cases removed on the record of tax

determination or other related record. Three comments opposed the requirements that case serial numbers appear on records of tax determination. The final rule revises that requirement to apply only if the proprietor is using an effective tax rate based on the specific batch from which a product was drawn and allows the data, when required, to be shown on related records rather than the record of tax determination.

b. *Standard effective tax rate.* The notice proposed that a standard effective tax rate may be established for any eligible distilled spirits product by computing an effective tax rate based on the least quantity and the lowest alcohol content of wine and flavors used in the manufacture of the product. ATF recognizes that many approved formulas on ATF F 5110.38 cover products in which the quantities, proof, and alcohol content of distilled spirits, wine and flavors vary between specified limits in arriving at the specified proof.

In such case, the basis used to establish a standard effective tax rate must be within the range shown on Form 5110.38, but it need not be the least quantity or the lowest alcohol content of wine and flavors permissible on the approved formula. However, in no case may a standard effective tax rate be less than that determined by the least quantity and the lowest alcohol content with which the product will ever be produced.

One commenter observed that the requirement to notify the regional director (compliance) of standard effective tax rates was unnecessarily burdensome. This procedure for applying effective tax rates to taxable removals was intended to be a very simple system for those proprietors who consistently manufacture a product according to an exact formula. It was not intended to be subject to frequent fluctuations, and the requirement to notify the regional director was proposed to provide a control on the consistency of the method. If standard rates, based on batches produced were allowed to fluctuate regularly, it would defeat the purpose of the method, and the standard tax rates may bear little relationship to the wine or flavor content of the taxable removals. In lieu of requiring notification of the regional director of the establishment or subsequent change of an effective tax rate, the final rule clarifies that a standard effective tax rate is to be a permanent rate. Once a standard rate has been established, a permanent record must be maintained of such rate. If any batch of the product is produced with a wine or flavor content less than that upon which the standard rate was determined, the batch must be kept segregated after bottling and must be taxpaid at the actual effective tax rate determined rather than a standard effective tax rate. If the formulation of the product is changed, the new formulation must be treated as a new product.

c. *Average effective tax rate.* The notice proposed that an average effective tax rate may be established for any eligible distilled spirits product by computing an effective tax rate based on the batches produced during the preceding 6-month period if at least three batches were produced during that period. If this procedure is used for tax determination, a proprietor must also maintain for each product a record showing the average effective tax rate computation. To reflect the wine and flavor content in current inventory accurately, the average effective tax rate computed for each product is adjusted each month so as to include only the immediately preceding 6-month period. One comment urged that the averaging method be allowed for products of which fewer than three batches were produced in the previous six months. Since the final rule clarifies that the averaging method requires a weighted average, this comment was adopted. Another commenter urged the deletion of the requirement to notify the regional director (compliance) of products being tax determined with the averaging method. This comment has also been adopted in the final rule.

Another comment questioned the requirement that average effective tax rates be based on the quantity of a product which is bottled rather than that which is produced. The requirement that average rates be calculated from goods bottled for domestic use was proposed to prevent an average rate from being affected by batches of the product which will never be taxpaid by the proprietor. Therefore, the final rule merely provides that an average rate will be determined from batches which have been bottled, in whole or in part, for domestic use.

d. *Inventory Reserve Account.* An inventory reserve account may be established for any eligible distilled spirits product. Under this procedure, each time the product is bottled or packaged, a deposit record is entered into the inventory reserve account of the product. As the product is subsequently removed from inventory, the records in the inventory reserve account are depleted, in chronological order, from the earliest entry date. All removals from inventory, including breakage and inventory losses, are chargeable against the inventory reserve account of the product. The tax rate applied to any taxable removal is determined by the effective tax rate of the record from which the removal is depleted.

3. Eligible Wine and Flavors

Credit for the wine and flavor content of distilled spirits is allowable only if the wine or flavor contained in the distilled spirits is an eligible wine or an eligible flavor. An eligible wine is a still wine which has not been subject to distillation at a distilled spirits plant after receipt in bond.

Notice No. 625 proposed to define an eligible flavor as one which was of a type for which drawback of tax was allowable under 26 U.S.C. 5134 and which had not been made at a distilled spirits plant. Section 5063 of the Technical and Miscellaneous Revenue Act of 1988, Pub. L. 100-647, 102 Stat. 3342, amended the definition of "flavors content" in section 5010 to exclude, also, alcohol derived from flavors which have been distilled at a distilled spirits plant. In explaining this limitation, the conference report states that the purpose is to make the flavor credit available only where flavors remain in the distilled spirits beverage after completion of distillation.

Accordingly, the final rule defines an eligible flavor as one which is of a type eligible for drawback of the tax under 26 U.S.C. 5134, which has not been manufactured at a distilled spirits plant, and which has not been subjected to distillation on distilled spirits plant premises such that the flavor does not remain in the finished product. To facilitate the manufacture of eligible flavors by a distilled spirits plant proprietor, the final rule provides that the premises of a distilled spirits plant may be alternately curtailed and extended to permit the use of the facilities for the manufacture of eligible flavors off of distilled spirits plant premises.

4. Documentation of Wine and Flavor Content

a. *Importers.* Any person who imports distilled spirits containing wine or flavors on which the tax is to be paid or determined at an effective tax rate must establish the eligibility of the wine and flavor components contained in the product and provide information for verification of the effective tax rate computation. This is accomplished by submitting to ATF a sample of each wine and flavor component to be used in the computation of the effective tax rate. In addition, each time the distilled

spirits are imported, a certificate of effective tax rate computation must be filed with the district director of customs at the time of entry liquidation or, for distilled spirits transferred under the provisions of 26 U.S.C. 5232, furnished to the distilled spirits plant proprietor. In lieu of this procedure, the importer may have a standard effective tax rate established for the product or use a standard effective tax rate previously approved for the product.

One commenter stated that the current criteria for imports in determining eligible flavors is sufficient and that the formulation of a product is proprietary information not necessarily available to the importer. ATF recognizes that much of the required information may be proprietary. For this reason, the rule allows such information to be submitted by the supplier, directly to ATF on behalf of the importer, and the supplier may be assured that the information will be treated as confidential under the provisions of 26 U.S.C. 6103. The samples and descriptive information are essential for ATF to determine that a flavor is eligible and to verify the wine or flavor content of the finished product. Two commenters urged that, if these requirements are adopted, an adequate "lead" time be provided for importers to submit the necessary information. Accordingly, the final rule delays the effective date of these requirements for an additional six months.

b. *Transfers in bond.* Distilled spirits plant proprietors who transfer in bond distilled spirits containing wine or flavors are required to record on the transfer record the eligible wine and the eligible flavors content of the distilled spirits so that the consignee proprietor may properly document the effective tax rate.

Three comments addressed the proposed amendment to the transfer records prescribed by 27 CFR 19.770. The proposed requirement would have required such additional information, for products containing wine or flavor, as would reflect the quantity of alcohol derived from the base spirits, the wines, and the flavors contained in the product and the identity of any such flavor. One comment urged that the effective tax rate would be sufficient information on the transfer record. We do not agree. If a transferee proprietor further rectifies a product, he must know both the wine content and the flavor content of the product received in order to properly determine an effective tax rate of the final product. However, we agree that the identity of the flavor is not essential data when spirits are transferred between the bonded premises of DSP's, and that requirement has been deleted from the final rule.

c. *Returns to bond.* To establish the effective tax rate at which tax was paid or determined, claims on distilled spirits containing eligible wine or eligible flavors returned to bond must set out the effective tax rate of each product and identify the applicable record of tax determination. The notice proposed that, when the date of tax determination could not be determined, such claims may be based on the lowest effective rate applied to the product. Two comments urged that this procedure be allowed whenever spirits are returned to bond, and the final rule so provides.

d. *Distilled spirits brought into the United States from Puerto Rico.* So that distilled spirits plant proprietors in the United States may properly document the eligible wine and the eligible flavors content of distilled spirits shipped from Puerto Rico to the United States without payment of tax for transfer from customs custody to ATF bond, the shipper shall provide the proprietor with a certificate of effective tax rate computation. Persons in Puerto Rico who ship distilled spirits to the United States on tax determination will be required to maintain a certificate of effective tax rate computation.

e. *Distilled spirits brought into the United States from the Virgin Islands.* Persons bringing distilled spirits containing wine or flavors into the United States from the Virgin Islands shall show the eligible wine and the eligible flavors content of the distilled spirits on the certificate obtained from the manufacturer under current regulations.

5. Conforming Amendments

Additionally, the regulations governing nonbeverage drawback are amended to provide for the necessary records and supporting data for claims when drawback is claimed on spirits which have been taxpaid at an effective tax rate less than the rate prescribed by 26 U.S.C. 5001.

B. Transfer of Bottled Distilled Spirits

The regulations governing the transfer of bulk distilled spirits between the bonded premises of distilled spirits plants have been amended to provide for similar transfers of alcohol bottled for industrial purposes.

Regulatory Flexibility Act

The provisions of the Regulatory Flexibility Act relating to an initial and final regulatory analysis (5 U.S.C. 603, 604) are not applicable to this final rule because it will not have a significant economic impact on a substantial number of small entities. The final rule will not impose, or otherwise cause, a significant increase in the reporting, recordkeeping, or other compliance burdens on a substantial number of small entities. The final rule is not expected to have significant secondary or incidental effects on a substantial number of small entities.

Accordingly, it is hereby certified under the provisions of section 3 of the Regulatory Flexibility Act (5 U.S.C. 605(b)) that this final rule will not have a significant economic impact on a substantial number of small entities.

Executive Order 12291

In compliance with Executive Order 12291 of Febraury 17, 1981, ATF has determined that this final rule is not a major rule since it will not result in:

(a) An annual effect on the economy of $100 million or more;

(b) A major increase in costs or prices for consumers, individual industries, Federal, State or local government agencies, or geographic regions; or

(c) Significant adverse effects on competition, employment, investment, productivity, innovation or on the ability of United States based enterprises to compete with foreign-based enterprises in domestic or export markets.

Paperwork Reduction Act

This final rule imposes requirements to collect additional data elements in six existing collection of information requirements. These collection of information requirements and the additional data elements required hereby have been reviewed by the Office of Management and Budget (OMB) in accordance with the requirements of the Paperwork Reduction Act (44 U.S.C. 3504(h)).

Additional data elements related to distilled spirits plants' processing records and reports are estimated to impose a statistically negligible burden and have been approved under OMB control number 1512–0198. Similarly, amendments being made to the applications, miscellaneous requests and notices for distilled spirits plants will have a statistically negligible effect on the burden imposed and have been approved under OMB control number 1512–0206.

It is estimated that the additional requirements for distilled spirits plants' excise tax records will impose an average annual recordkeeping burden of 26 hours on each respondent to whom they apply. These requirements have been approved under OMB control number 1512–0203.

Amendments made to the requirements for distilled spirits plants' transaction and supporting records are estimated to impose an average annual burden of eight hours on each respondent and have been approved under OMB control number 1512–0250.

Additional requirements for importers' records and reports will impose an estimated annual burden of ten hours on each respondent to whom they are applicable and have been approved under OMB control number 1512–0352.

It is believed that the additional information required to support claims for drawback of tax by manufacturers of nonbeverage products will impose a statistically negligible burden and have been approved under OMB control number 1512–0379.

Comments concerning the accuracy of this burden estimate and suggestions for reducing this burden should be directed to the Chief, Information Programs Branch, Room 7011, Bureau of Alcohol, Tobacco and Firearms, 1200 Pennsylvania Avenue NW., Washington, DC 20226 and to the Office of Management and Budget, paperwork Reduction Project (1512–0198, 1512–0203, 1512–0206, 1512–0250, 1512–0352, or 1512–0379, as applicable), Washington, DC 20503, attention: Desk Officer for the Bureau of Alcohol, Tobacco and Firearms.

Drafting Information

The principal author of this document is Dick Langford, Distilled Spirits and Tobacco Branch, Bureau of Alcohol, Tobacco and Firearms.

List of Subjects

27 CFR Part 19

Administrative practice and procedure, Alcohol and alcoholic beverages, Authority delegations (Government agencies), Chemicals, Claims, Customs duties and inspection, Electronic fund transfers, Excise taxes, Exports, Gasohol, Imports, Labeling, Liquors, Packaging and containers Puerto Rico, Reporting and recordkeeping requirements, Research, Security measures, Spices and flavorings, Stills, Surety bonds, Transportation Vinegar, Virgin Islands, Warehouses, Wine.

27 CFR Part 197

Alcohol and alcoholic beverages, Authority delegations (Government agencies), Claims, Drugs, Excise taxes, Foods, Reporting and recordkeeping requirements, Spices and flavorings, Surety bonds.

27 CFR Part 250

Administrative practice and procedure, Alcohol and alcoholic beverages, Authority delegations (Government agencies), Beer, Claims, Customs duties and inspection, Drugs, Electronic fund transfers, Excise taxes, Foods, Liquors, Packaging and Containers, Puerto Rico, Reporting and recordkeeping requirements, Spices and flavorings, Surety bonds, Transportation, Virgin Islands, Warehouses, Wine.

27 CFR Part 251

Administrative practice and procedure, Alcohol and alcoholic beverages, Authority delegations (Government agencies), Beer, Cosmetics, Customs duties and inspection, Excise taxes, Imports, Labeling, Liquors, Packaging and containers, Perfume, Reporting and recordkeeping requirements, Spices and flavorings, Transportation, Wine.

Issuance

Title 27 Chapter I of the Code of Federal Regulations is amended as follows:

Section A. Part 19 is amended as follows:

PART 19—DISTILLED SPIRITS PLANTS

Paragraph 1–2. The authority citation for part 19 is revised to read as follows:

Authority: 19 U.S.C. 81c, 1311; 26 U.S.C. 5001, 5002, 5004–5006, 5008, 5010, 5041, 5061, 5062, 5066, 5081, 5101, 5111–5113, 5142, 5143, 5146, 5171–5173, 5175, 5176, 5178–5181, 5201–5204, 5206, 5207, 5211–5215, 5221–5223, 5231, 5232, 5235, 5236, 5241–5243, 5271, 5273, 5301, 5311–51313, 5362, 5370, 5373, 5501–5505, 5551–5555, 5559, 5561, 5562, 5601, 5612, 5682, 6001, 6065, 6109, 6302, 6311, 6676, 6806, 7011, 7510, 7805; 31 U.S.C. 9301, 9303, 9304, 9306.

Para. 3. Section 19.11 is amended by revising the definition of *Alcoholic flavoring materials,* and by adding definitions of *Effective tax rate, Eligible flavor,* and *Eligible wine,* to read as follows:

§ 19.11 Meaning of terms.

* * * * *

Alcoholic flavoring materials. Any nonbeverage product on which drawback has been or will be claimed under 26 U.S.C. 5131–5134 or flavors imported free of tax which are unfit for beverage purposes. The term includes eligible flavors but does not include flavorings or flavoring extracts manufactured on the bonded premises of distilled spirits plant as an intermediate product.

* * * * *

Effective tax rate. The net tax rate after reduction for any credit allowable under 26 U.S.C. 5010 for wine and flavor content at which the tax imposed on distilled spirits by 26 U.S.C. 5001 or 7652 is paid or determined.

* * * * *

Eligible flavor. A flavor which:

(1) Is of a type that is eligible for drawback of tax under 26 U.S.C. 5134,

(2) Was not manufactured on the premises of a distilled spirits plant, and

(3) Was not subjected to distillation on distilled spirits plant premises such that the flavor does not remain in the finished product.

Eligible wine. A wine containing not more than 0.392 gram of carbon dioxide per 100 milliliters of wine which has not been subject to distillation at a distilled spirits plant after receipt in bond.

* * * * *

Para. 4. The undesignated center heading preceding § 19.21 and § 19.21 are revised to read as follows:

Gallonage Taxes

§ 19.21 Tax.

(a) A tax is imposed by 26 U.S.C. 5001 and 7652 on all spirits produced in, imported into or brought into the United States at the rate prescribed in section 5001 on each proof gallon and a proportionate tax at a like rate on all fractional parts of a proof gallon. Wines containing more than 24 percent of alcohol by volume are taxed as spirits. All products of distillation, by whatever name known, which contain spirits, on which the tax imposed by law has not been paid, and any alcoholic ingredient added to such products, are considered and taxed as spirits.

(b) A credit against the tax imposed on distilled spirits by 26 U.S.C. 5001 or 7652 is allowable under 26 U.S.C. 5010 on each proof gallon of alcohol derived from eligible wine or from eligible flavors which do not exceed 2½ percent of the finished product on a proof gallon basis. The credit is allowable at the time the tax is payable as if it constituted a reduction in the rate of tax.

(c) Where credit against the tax is desired, the person liable for the tax shall establish an effective tax rate in accordance with § 19.34. The effective tax rate established will be applied to each withdrawal or other taxable disposition of the distilled spirits.

(Sec. 201, Pub. L. 85–859, 72 Stat. 1314, as amended (26 U.S.C. 5001); Sec. 6, Pub. L. 96–598, 94 Stat. 3488, as amended (26 U.S.C. 5010); Act of August 16, 1954, Pub. L. 591, 68A Stat. 907, as amended (26 U.S.C. 7652)).

Para. 5. The undesignated center heading preceding § 19.36 is removed

and § 19.36 is redesignated as § 19.26 and revised to read as follows:

Gallonage Taxes

§ 19.26 Tax on wine.

(a) *Imposition of tax.* A tax is imposed by 26 U.S.C. 5041 of 7652 on wine (including imitation, substandard, or artificial wine, and compounds sold as wine) produced in or imported or brought into the United States. Proprietors of distilled spirits plants may become liable for wine taxes under 26 U.S.C. 5362(b)(3) in connection with wine transferred in bond to a distilled spirits plant. Wine may not be removed from the bonded premises of a distilled spirits plant for consumption or sale as wine.

(b) *Liability for tax.* Except as otherwise provided by law, the liability for tax on wine transferred in bond from a bonded wine cellar to a distilled spirits plant, or transferred in bond between distilled spirits plants, will continue until the wines is used in a distilled spirits product.

(Sec. 201, Pub. L. 85–859, 72 Stat. 1331, as amended, 1380, as amended (26 U.S.C. 5041, 5362))

Para. 6. New § 19.34, with the undesignated center heading immediately preceding it, §§ 19.35, 19.36, 19.37 and 19.38 are added to read as follows:

Effective Tax Rates

§ 19.34 Computation of effective tax rate.

(a) The proprietor shall compute the effective tax rate for distilled spirits containing eligible wine or eligible flavors as the ratio of the numerator and denominator as follows:

(1) The numerator will be the sum of:

(i) The proof gallons of all distilled spirits used in the product (exclusive of distilled spirits derived from eligible flavors), multiplied by the tax rate prescribed by 26 U.S.C. 5001;

(ii) The wine gallons of each eligible wine used in the product, multiplied by the tax rate prescribed by 26 U.S.C. 5041(b)(1), (2), or (3), which would be imposed on the wine but for its removal to bonded premises; and

(iii) The proof gallons of all distilled spirits derived from eligible flavors used in the product, multiplied by the tax rate prescribed by 26 U.S.C. 5001, but only to the extent that such distilled spirits exceed 2½% of the denominator prescribed in paragraph (a)(2) of this section.

(2) The denominator will be the sum of:

(i) The proof gallons of all distilled spirits used in the product, including distilled spirits derived from eligible flavors; and

(ii) The wine gallons of each eligible wine used in the product, multiplied by twice the percentage of alcohol by volume of each, divided by 100.

(b) In determining the effective tax rate, quantities of distilled spirits, eligible wine, and eligible flavors will be expressed to the nearest tenth of a proof gallon. The effective tax rate may be rounded to as many decimal places as the proprietor deems appropriate, provided that, such rate is expressed no less exactly than the rate rounded to the nearest whole cent, and the effective tax rates for all products will be consistently expressed to the same number of decimal places. In such case, if the number is less than five it will be dropped; if it is five or over, a unit will be added.

(c) The following is an example of the use of the formula.

BATCH RECORD

Distilled spirits	2249.1 proof gallons.
Eligible wine (14% alcohol by volume).	2265.0 wine gallons.
Eligible wine (19% alcohol by volume).	1020.0 wine gallons.
Eligible flavors	100.9 proof gallons.

$$\frac{2249.1(\$12.50)+[2265.0(\$.17)+1020(\$.67)]+16.6\ (\$12.50)}{2249.1+100.9+[2265.0(.28)+1020.0(.38)]}=$$

$$\frac{\$28,113.75+[\$385.05+\$683.40]+\$207.50}{2,350.0+[634.2+387.6]}=$$

$$\frac{\$29,389.70}{3,371.8}=\$8.72,\text{ the effective tax rate.}$$

[1] Proof gallons by which distilled spirits derived from eligible flavors exceed 2½% of the total proof gallons in the batch (100.9−(2½%)×3,371.8=16.6).

(Sec. 6, Pub. L. 96–598, 94 Stat. 3488, as amended (26 U.S.C. 5010))

§ 19.35 Application of effective tax rate (Actual).

Any proprietor who does not apply effective tax rates to taxable removals in accordance with § 19.36, 19.37 or 19.38 shall establish an effective tax rate for each batch of distilled spirits in the processing account on which credit against tax is desired for alcohol derived from eligible wine or eligible flavors. The effective tax rate will be computed in accordance with § 19.34 and will be recorded on the dump or batch record for the product, as required by § 19.748. The serial numbers of the cases removed at such rate shall be recorded on the record of tax determination prescribed in § 19.761 or other related record available for examination by any ATF officer.

(Sec. 807, Pub. L. 96–39, 93 Stat. 284 (26 U.S.C. 5207); Sec. 201, Pub. L. 85–859, 72 Stat. 1356, as amended (26 U.S.C. 5201); Sec 6, Pub. L. 96–598, 94 Stat. 3488, as amended (26 U.S.C. 5010))

§ 19.36 Standard effective tax rate.

(a) The proprietor may establish a permanent standard effective tax rate for any eligible distilled spirits product based on the least quantity and the lowest alcohol content of eligible wine or eligible flavors used in the manufacture of the product. The permanent standard effective tax rate must equal the highest tax rate applicable to the product. The proprietor shall maintain a permanent record of the standard effective tax rate established for each product in accordance with § 19.765. Whenever the proprietor manufactures a batch of the product

with a lesser quantity or lower alcohol content of eligible wine or eligible flavor, he shall keep the cased goods segregated from other completed cases of the same product and shall tax determine the product in accordance with § 19.35.

(b) If the regional director (compliance) finds that the use of this procedure jeopardizes the revenue or causes administrative difficulty, the proprietor shall discontinue the use of the procedure.

(Sec. 807, Pub. L. 96–39, 93 Stat. 284 (26 U.S.C. 5207); Sec. 201, Pub. L. 85–859, 72 Stat. 1356, as amended (26 U.S.C. 5201); Sec. 6, Pub. L. 96–598, 94 Stat. 3488, as amended (26 U.S.C. 5010))

§ 19.37 Average effective tax rate.

(a) The proprietor may establish an average effective tax rate for any eligible distilled spirits product based on the total proof gallons in all batches of the same composition which have been produced during the preceding 6-month period and which have been or will be bottled or packaged, in whole or in part, for domestic consumption. At the beginning of each month, the proprietor shall recompute the average effective tax rate so as to include only the immediately preceding 6-month period. The average effective tax rate established for a product will be shown in the record of average effective tax rates prescribed in § 19.763.

(b) If the regional director (compliance) finds that the use of this procedure jeopardizes the revenue or causes administrative difficulty, the proprietor shall discontinue the use of this procedure.

(Sec. 807, Pub. L. 96–39, 93 Stat. 284 (26 U.S.C. 5207); Sec. 201, Pub. L. 85–859, 72 Stat. 1356, as amended (26 U.S.C. 5201); Sec. 6, Pub. L. 96–598, 94 Stat. 3488, as amended (26 U.S.C. 5010))

§ 19.38 Inventory reserve account.

(a) The proprietor may establish an inventory reserve account for any eligible distilled spirits product by maintaining an inventory reserve record as prescribed by 19.764. The effective tax rate applied to each removal or other disposition will be the effective tax rate recorded on the inventory reserve record from which the removal or other disposition is depleted.

(b) If the regional director (compliance) finds that the use of this procedure jeopardizes the revenue or causes administrative difficulty, the proprietor shall discontinue the use of this procedure.

(Sec. 807, Pub. L. 96–39, 93 Stat. 284 (26 U.S.C. 5207); Sec. 201, Pub. L. 85–859, 72 Stat. 1356, as amended (26 U.S.C. 5201); Sec. 6, Pub. L. 96–598, 94 Stat. 3488, as amended (26 U.S.C. 5010))

Para. 7. § 19.42 is amended by redesignating paragraph (c) as (d) and adding a new paragraph (c) to read as follows:

§ 19.42 Claims on spirits returned to bonded premises.

* * * * *

(c) Claims for credit or refund of tax on spirits containing eligible wine or eligible flavors must set forth the date and serial number of the record of tax determination and the effective tax rate at which the tax was paid or determined. If this information is not provided, the amount of tax claimed will be based on the lowest effective tax rate applied to the product.

* * * * *

Para. 8. In § 19.92, paragraph (a) is revised to read as follows:

§ 19.92 When gauges are required.

(a) *Initial proof.* Except for a gauge required by § 19.383 or § 19.517 or in any case where the proof changes as a result of a storage or processing operation, the initial determination of proof for distilled spirits, wine, or eligible flavors may be used whenever a subsequent gauge is required by this part to be made at the same plant.

* * * * *

Para. 9. § 19.206 is added immediately following § 19.205 to read as follows:

§ 19.206 Curtailment and extension of plant premises for the manufacture of eligible flavors.

(a) *General.* The premises of a distilled spirits plant may be alternately curtailed and extended, as provided in this section, to permit the use of the facilities for the manufacture of eligible flavors.

(b) *Qualifying documents.* When a portion of the distilled spirits plant premises is first to be curtailed or extended as provided in this section, the proprietor shall file with the regional director (compliance)—

(1) An application for registration, Form 5110.41, to cover alternate extension and curtailment of the premises, and

(2) A special diagram, in duplicate, delineating the premises as they will exist, both during extension and curtailment, and clearly depicting all buildings, floors, rooms, areas, equipment and spirits lines (identified individually by letter or number) which are to be subject to alternation, in their relative operating sequence.

(c) *Proprietor's responsibility.* Once such qualifying documents have been approved by the regional director (compliance), the designated premises and equipment may be alternately curtailed or extended pursuant to notice on Form 5110.34. Portions of the premises to be excluded by curtailment or included by extension shall not be used for purposes other than as set forth in the current notice. The proprietor shall remove all spirits, denatured spirits, articles, and wines from the premises or equipment which are to be curtailed from bonded premises or are to be included by extension of bonded premises prior to the effective date and hour of the notice, except that—

(1) Bonded spirits on portions of bonded premises that are to be curtailed need not be removed if the spirits are taxpaid concurrent with the filing of Form 5110.34 to effect curtailment; and

(2) Taxpaid spirits which are on portions of premises to be included by extension of bonded premises and which have not been used in the manufacture of a nonbeverage product need not be removed if the spirits are to be dumped immediately and returned to bond under the provisions of Subpart U of this part.

(d) *Separation of premises.* The portion of the premises which is to be curtailed or extended as provided in this section shall be separated from the remaining portion of the distilled spirits plant in a manner which satisfies the regional director (compliance) that the revenue will not be jeopardized.

(Sec. 201, Pub. L. 85–859, 72 Stat. 1349, as amended, 1353, as amended (26 U.S.C. 5172, 5178))

Para. 10. § 19.374 is revised to read as follows:

§ 19.374 Manufacture of nonbeverage products, intermediate products, or eligible flavors.

Distilled spirits and wine may be used for the manufacture of flavors or flavoring extracts of a nonbeverage nature as intermediate products to be used exclusively in the manufacture of other distilled spirits products on bonded premises. Nonbeverage products on which drawback will be claimed, as provided in 26 U.S.C. 5131–5134, may not be manufactured on bonded premises. Premises used for the manufacture of nonbeverage products on which drawback will be claimed must be separated from bonded premises. For purposes of computing an effective tax rate, flavors manufactured on either the bonded or general premises of a distilled spirits plant are not eligible flavors.

(Sec. 201, Pub. L. 85–859, 72 Stat. 1356, as amended (26 U.S.C. 5201))

Para. 11. In § 19.505, paragraph (c) is added to read as follows:

§ 19.505 Authorized transfers.

* * * * *

(c) *Alcohol for industrial purposes.* Alcohol bottled for industrial purposes, as provided in § 19.398, may be transferred between the bonded premises of distilled spirits plants in accordance with the procedures prescribed in §§ 19.506 through 19.510 for bulk distilled spirits.

* * * * *

Para. 12. § 19.682 is amended by revising paragraph (c) to read as follows:

§ 19.682 Receipt and gauge of returned taxpaid spirits.

* * * * *

(c) *Supporting documents.* (1) Proprietors must have on file at the plant where spirits are returned to bond such documentation as is necessary to establish the amount of tax for which a claim for credit or refund may be allowed. Proprietors shall maintain credit memoranda or comparable financial records evidencing the return of each lot of spirits.

(2) If the spirits contain eligible wine or eligible flavors, the proprietor shall also have on file a copy of the record of tax determination prescribed by § 19.761, or other documentation which establishes the amount of tax for which a claim for credit or refund may be allowed. In lieu of establishing the actual effective tax rate of a product, the proprietor may claim refund or credit based on the lowest effective tax rate applied to the product.

(Sec. 807, Pub. L. 96–39, 93 Stat. 285 (26 U.S.C. 5215); Sec. 807, Pub. L. 96–39, 93 Stat. 284 (26 U.S.C. 5207); Sec. 201, Pub. L. 85–859, 72 Stat. 1356, as amended (26 U.S.C. 5201); Sec. 6, Pub. L. 96–598, 94 Stat. 3488, as amended (26 U.S.C. 5010))

Para. 13. § 19.748 is amended by revising paragraphs (a)(16) and (a)(17), and adding (a)(18) to read as follows:

§ 19.748 Dump/batch records.

(a) * * *

(16) Total quantity in proof gallons of product transferred;

(17) Gain or loss; and

(18) For each batch to be tax determined in accordance with § 19.35, the effective tax rate.

* * * * *

Para. 14. Under the undesignated center heading, TAX RECORDS of Subpart W, §§ 19.761 and 19.762 are revised to read as follows:

§ 19.761 Record of tax determination.

A serially numbered invoice or shipping document, signed or initialed by an agent or employee of the proprietor, will constitute the record of tax determination. Although neither the proof gallons nor effective tax rates need be shown on the record of tax determination, there shall be shown on each invoice or shipping document sufficient information to enable ATF officers to determine the total proof gallons and, if applicable, each effective tax rate and the proof gallons removed at each effective tax rate. For purposes of this part, the total proof gallons calculated from each invoice or shipping document constitutes a single withdrawal.

(Sec. 807, Pub. L. 96–39, 93 Stat. 284 (26 U.S.C. 5207))

§ 19.762 Daily summary record of tax determinations.

Each proprietor of a distilled spirits plant who withdraws distilled spirits on determination of tax, but before payment of tax, shall maintain a daily summary record of tax determinations. The summary record will show, for each day on which tax determinations occur:

(a) The serial numbers of the records of tax determination, the total proof gallons, rounded to the nearest tenth proof gallon on which tax was determined at each effective tax rate, and the total tax; or

(b) The serial numbers of the records of tax determination, the total tax for each record of tax determination and the total tax.

(Sec. 807, Pub. L. 96–39, 93 Stat. 284 (26 U.S.C. 5207))

Para. 15. §§ 19.763, 19.764 and 19.765 are added immediately following § 19.762 to read as follows:

§ 19.763 Record of average effective tax rates.

(a) For each distilled spirits product to be tax determined in accordance with § 19.37, the proprietor shall prepare a daily summary record showing the—

(1) Serial number of the batch record of each batch of the product which will be bottled or packaged, in whole or in part, for domestic consumption;

(2) Proof gallons in each such batch derived from distilled spirits, eligible wine, and eligible flavors; and

(3) Tax liabilities of each such batch determined as follows:

(i) Proof gallons of all distilled spirits (exclusive of distilled spirits derived from eligible flavors), multiplied by the tax rate prescribed in 26 U.S.C. 5001;

(ii) Wine gallons of each eligible wine, multiplied by the tax rate which would be imposed on the wine under 26 U.S.C. 5041(b)(1), (2), or (3) but for its removal to bonded premises; and

(iii) Proof gallons of all distilled spirits derived from eligible flavors to the extent that such distilled spirits exceed 2½% of the proof gallons in the product, multiplied by the tax rate prescribed in 26 U.S.C. 5001.

(b) At the end of each month during which the product is manufactured, the proprietor shall determine the—

(1) Total proof gallons and total tax liabilities for each summary record prescribed by paragraph (a) of this section;

(2) Add the sums from paragraph (b)(1) of this section to the like sums determined for each of the preceding five months; and

(3) Divide the total tax liabilities by the total proof gallons.

(Sec. 807, Pub. L. 96–39, 93 Stat. 284 (26 U.S.C. 5207))

§ 19.764 Inventory reserve records.

(a) *General.* The proprietor shall establish an inventory reserve account, as provided in this section, for each eligible distilled spirits product to be tax determined in accordance with § 19.38.

(b) *Deposit records.* For each batch of the product bottled or packaged, the proprietor shall enter into the inventory reserve account a deposit record, which may be combined with the bottling and packaging record required by § 19.749 showing the:

(1) Name of the product;

(2) Bottling and packaging record serial number;

(3) Date the bottling or packaging was completed;

(4) Total proof gallons bottled and packaged; and

(5) Effective tax rate of the product computed in accordance with § 19.34.

(c) *Depletions.* The inventory reserve account for each product will be depleted in the same order in which the deposit records were entered into such account. A depletion will be recorded for each disposition (e.g., a taxable removal, an exportation, an inventory shortage or breakage) by entering on the deposit record the:

(1) Transaction date,

(2) Transaction record serial number,

(3) Proof gallons disposed of, and

(4) Proof gallons remaining. If any depletion exceeds the quantity of product remaining on the deposit record, the remaining quantity will be depleted, the deposit record closed, and the remainder of the transaction depleted from the next deposit record.

(Sec. 807, Pub. L. 96–39, 93 Stat. 284 (26 U.S.C. 5207))

§ 19.765 Standard effective tax rates.

For each product to be tax determined using a standard effective tax rate in accordance with § 19.36, the proprietor shall prepare a record of the standard effective tax rate computation showing, for one proof gallon of the finished product, the following information:

(a) The name of the product;

(b) The least quantity of each eligible flavor which will be used in the product, in proof gallons, or 0.025 proof gallon, whichever is less;

(c) The least quantity of each eligible wine which will be used in the product, in proof gallons;

(d) The greatest effective tax rate applicable to the product, calculated in accordance with § 19.34 with the values indicated in paragraphs (a) and (b) of this section; and

(e) The date on which the use of the standard effective tax rate commenced.

Para. 15. § 19.770 is amended by revising paragraphs (a)(6)(iv), (a)(6)(vi), (a)(6)(vii), and adding (a)(6)(viii) to read as follows:

§ 19.770 Transfer record.

(a) * * *

(6) * * *

(iv) Number of packages or cases with their lot identification numbers of serial numbers and date of fill;

* * * * *

(vi) Proof gallons for distilled spirits, or wine gallons for denatured spirits or wine;

(vii) Conveyance identification; and

(viii) For distilled spirits products which contain eligible wine or eligible flavors, the elements necessary to compute the effective tax rate as follows:

(A) Proof gallons of distilled spirits (exclusive of distilled spirits derived from eligible flavors);

(B) Wine gallons of each eligible wine and the percentage of alcohol by volume of each; and

(C) Proof gallons of distilled spirits derived from eligible flavors.

* * * * *

Para. 17. § 19.780 is added immediately following § 19.779 to read as follows:

§ 19.780 Record of distilled spirits shipped to manufacturers of nonbeverage products.

(a) *General.* Where distilled spirits are shipped to a manufacturer of nonbeverage products, the proprietor shall prepare a record of shipment, forward the original to the consignee, and retain a copy.

(b) *Form of record.* The record of tax determination prescribed by § 19.761, or any other document issued by the proprietor and containing the necessary information, may be used as the record of shipment.

(c) *Required information.* In addition to any other information on the document, the document used as the record of shipment must contain the following information:

(1) Name, address and registry number of the proprietor;

(2) Date of shipment;

(3) Name and address of the consignee;

(4) Kind, proof, and quantity of the distilled spirits;

(5) Number and size of containers;

(6) Package identification numbers or serial numbers of containers;

(7) Serial number of the applicable record of tax determination; and

(8) For distilled spirits containing eligible wine or eligible flavors, the effective tax rate.

(Sec. 807, Pub. L. 96-39, 93 Stat. 284 (26 U.S.C. 5207); Sec. 201 Pub. L. 85-859, 72 Stat. 1356, as amended (26 U.S.C. 5201))

§ 19.1010 [Amended]

Para. 18. In § 19.1010, the table in paragraph (b) is amended by revising the citation for § 19.505 and by adding, in numerical order, citations for §§ 19.21, 19.34, 19.35, 19.36, 19.37, 19.38, 19.206, 19.763, 19.764, 19.765 and 19.780, to read as follows:

§ 19.1010 OMB control numbers assigned pursuant to the Paperwork Reduction Act.

* * * * *

(b) * * *

Sections where identified	Current OMB control No.
19.21	1512-0203
19.34	1512-0203
19.35	1512-0198 1512-0203
19.36	1512-0203
19.37	1512-0203
19.38	1512-0203
* * * *	*
19.206	1512-0206
* * * *	*
19.505	1512-0191 1512-0250
* * * *	*
19.763	1512-0203
19.764	1512-0203
19.765	1512-0203
* * * *	*
19.780	1512-0250
* * * *	*

Section B. Part 197 is amended as follows:

PART 197—DRAWBACK ON DISTILLED SPIRITS USED IN MANUFACTURING NONBEVERAGE PRODUCTS

Paragraph 1. The authority citation for part 197 is revised to read as follows:

Authority: 26 U.S.C. 5010, 5131-5134, 5143, 5146, 5206, 5273, 6065, 6091, 6109, 6402, 6511, 6676, 7213, 7805; 31 U.S.C. 9301, 9303, 9304, 9306.

§ 197.5 [Amended]

Para. 2. § 197.5 is amended by adding, in alphabetical order, the definition of the following term:

§ 197.5 Meaning of terms.

* * * * *

Effective tax rate. The next tax rate after reduction for any credit allowable under 26 U.S.C. 5010 for wine and flavor content at which the tax imposed on distilled spirits by 26 U.S.C. 5001 or 7652 is paid or determined.

* * * * *

Para. 3. Section 197.105 is revised to read as follows:

§ 197.105 Drawback.

(a) Upon the filing of a claim as provided in this subpart, drawback will be allowed to any person who meets the requirements of this part. Drawback will be allowed on each proof gallon of distilled spirits on which the tax has been paid or determined, and which has been used in the manufacture of a nonbeverage product.

(b) Drawback will be allowed at a rate of $1 less than the tax rate at which the distilled spirits tax was paid or determined. Special tax as a manufacturer of nonbeverage products must be paid before drawback is allowed.

(c) Drawback will be allowed only to the extent that the claimant can establish, by evidence satisfactory to the regionial director (compliance), the actual quantity of distilled spirits used in the manufacture of a nonbeverage product and the tax paid or determined on such distilled spirits.

(Approved by the Office of Management and Budget under control number 1512-0379)

(Sec. 201. Pub. L. 85-859, 72 Stat. 1345, as amended (26 U.S.C. 5132))

Para. 4. Section 197.109 is amended by revising paragraph (b) and by adding a parenthetical paragraph referencing the OMB control number to read as follows:

§ 197.109 Information to be shown by the claim.

* * * * *

(b) That the distilled spirits on which drawback is claimed are fully taxpaid or tax-determined at the distilled spirits rate applicable to the distilled spirits.

* * * * *

(Approved by the Office of Management and Budget under control number 1512-0379)

§ 197.115 [Amended]

Para. 5. In § 197.115, a sentence and a parenthetical paragraph referencing the OMB control number are added, immediately after the last sentence, reading as follows:

§ 197.115 Use of distilled spirits.

* * * The statement accompanying each claim will separately identify distilled spirits taxpaid with an effective tax rate and show the effective tax rate of each.

(Approved by the Office of Management and Budget under control number 1512-0379)

Para. 6. Section 197.130 is amended by revising paragraph (e) to read as follows:

§ 197.130 Nature of records.

* * * * *

(e) Number of proof gallons and kind of distilled spirits used in the manufacture of each product, the date of use and, if the distilled spirits contain wine or flavors, the effective tax rate.

* * * * *

Para. 7. Section 197.130b is amended by revising paragraphs (a)(5) and (a)(6), by adding paragraph (a)(7) and by revising paragraph (b) to read as follows:

§ 197.130b Evidence of taxpayment of distilled spirits.

(a) * * *

(5) The serial or package identification number of the container;

(6) The kind of spirits, proof, and proof gallons in the container; and

(7) For distilled spirits which contain wine or flavors, the effective tax rate.

(b) *Imported distilled spirits.* Evidence of tax payment of imported distilled spirits (such as Customs Forms 7501 and 7505A receipted to indicate payment of tax and the certificate of effective tax rate computation (if applicable)) will be obtained from the importer and maintained by the manufacturer for inspection by ATF officers.

* * * * *

Section C. Part 250 is amended as follows:

PART 250—LIQUORS AND ARTICLES FROM PUERTO RICO AND THE VIRGIN ISLANDS

Para. 12. The authority citation for part 250 is revised to read as follows:

Authority: 19 U.S.C. 81c; 26 U.S.C. 5001, 5007, 5008, 5010, 5041, 5051, 5061, 5111, 5112, 5114, 5121, 5122, 5124, 5131-5134, 5141, 5146, 5207, 5232, 5271, 5276, 5301, 5314, 5555, 6001, 6301, 6302, 6804, 7101, 7102, 7651, 7652, 7805; 27 U.S.C. 203, 205; 31 U.S.C. 9301, 9303, 9304, 9306.

§ 250.11 [Amended]

Para. 3. Section 250.11 is amended by adding, in alphabetical order, the definitions of the following terms:

* * * * *

Effective tax rate. The net tax rate after reduction for any credit allowable under 26 U.S.C. 5010 for wine and flavor content at which the tax imposed on distilled spirits by 26 U.S.C. 7652 is paid or determined.

* * * * *

Eligible flavor. A flavor which:

(1) Is of a type that is eligible for drawback of tax under 26 U.S.C. 5134,

(2) Was not manufactured on the premises of a distilled spirits plant, and

(3) Was not subjected to distillation on distilled spirits plant premises such that the flavor does not remain in the finished product.

Eligible wine. A wine containing not more than 0.392 gram of carbon dioxide per 100 milliliters of wine which has not been subject to distillation at a distilled spirits plant after receipt in bond.

* * * * *

Para. 4. Section 250.50a is added to read as follows:

§ 250.50a Verification of eligible flavors.

(a) Any person who, after December 1, 1990, ships to the United States any distilled spirits on which the tax has been or is to be paid or determined at an effective tax rate based in part on the alcohol content derived from any eligible flavor not previously approved on ATF Form 5530.5 (1678) or 5150.19 shall, before the first tax determination at that rate, request and receive a statement of eligibility for each flavor to be used in the computation of the effective tax rate.

(b) To receive a statement of eligibility, the person shipping the distilled spirits shall submit to the ATF National Laboratory, 1401 Research Boulevard, Rockville, MD 20850, the following:

(1) An 8-ounce sample; and

(2) A statement of composition listing the—

(i) Name and percentage of alcohol by volume of the flavor; and

(ii) Name and quantity of each ingredient used in the manufacture of the flavor.

(Approved by Office of Management and Budget under control number 1512-0203)

(Act of August 16, 1954, Pub. L. 591, 68A Stat. 907, as amended (26 U.S.C. 7652); Sec. 201, Pub. L. 85-859, 72 Stat. 1314, as amended (26 U.S.C. 5001); Sec. 6, Pub. L. 96-598, 94 Stat. 3488, as amended (26 U.S.C. 5010))

Para. 5. Section 250.77 is revised to read as follows:

§ 250.77 Subject to tax.

(a) Distilled spirits of Puerto Rican manufacture, and any products containing such distilled spirits, brought into the United States and withdrawn for consumption or sale are subject to a tax equal to the tax imposed in the United States by 26 U.S.C. 5001.

(b) A credit against the tax imposed on distilled spirits by 26 U.S.C. 7652 is allowable under 26 U.S.C. 5010 on each proof gallon of alcohol derived from eligible wine or from eligible flavors which do not exceed 2½ percent of the finished product on a proof gallon basis. The credit is allowable at the time the tax is payable as if it constituted a reduction in the rate of tax.

(c) Where credit against the tax is desired, the person liable for the tax shall establish an effective tax rate in accordance with § 250.79a. The effective tax rate established will be applied to each withdrawal or other disposition of the distilled spirits for consumption or sale within the United States.

(Approved by Office of Management and Budget under control number 1512-0203)

(Act of August 16, 1954, Pub. L. 591, 68A Stat. 907, as amended (26 U.S.C. 7652); Sec. 201, Pub. L. 85-859, 72 Stat. 1314, as amended (26 U.S.C. 5001); Sec. 6, Pub. L. 96-598, 94 Stat. 3488, as amended (26 U.S.C. 5010))

Para. 6. Section 250.79a is added to read as follows:

§ 250.79a Computation of effective tax rate.

(a) The proprietor shall compute the effective tax rate for distilled spirits containing eligible wine or eligible flavors as the ratio of the numerator and denominator as follows:

(1) the numerator will be the sum of:

(i) The proof gallons of all distilled spirits used in the product (exclusive of distilled spirits derived from eligible flavors), multiplied by the tax rate prescribed by 26 U.S.C. 5001;

(ii) The wine gallons of each eligible wine used in the product, multiplied by the tax rate prescribed by 26 U.S.C. 5041(b) (1), (2), or (3), as applicable; and

(iii) The proof gallons of all distilled spirits derived from eligible flavors used in the product, multiplied by the tax rate prescribed by 26 U.S.C. 5001, but only to the extent that such distilled spirits exceed 2½% of the denominator prescribed in paragraph (a)(2) of this section.

(2) The denominator will be the sum of:

(1) The proof gallons of all distilled spirits used in the product, including

distilled spirits derived from eligible flavors; and

(ii) The wine gallons of each eligible wine used in the product, multiplied by twice the percentage of alcohol by volume of each, divided by 100.

(b) In determining the effective tax rate, quantities of distilled spirits, eligible wine, and eligible flavors will be expressed to the nearest tenth of a proof gallon. The effective tax rate may be rounded to as many decimal places as the proprietor deems appropriate, provided that, such rate is expressed no less exactly than the rate rounded to the nearest whole cent, and the effective tax rates for all products will be consistently expressed to the same number of decimal places. In such case, if the number is less than five it will be dropped; if it is five or over, a unit will be added.

(c) The following is an example of the use of the formula.

BATCH RECORD

Distilled spirits	2249.1 proof gallons.
Eligible wine (14% alcohol by volume).	2265.0 wine gallons.
Eligible wine (19% alcohol by volume).	1020.0 wine gallons.
Eligible flavors	100.9 proof gallons.

$$\frac{2249.1(\$12.50)+[2265.0(\$.17)+1020(\$.67)]+16.6\ ^{1}\ (\$12.50)}{2249.1+100.9+[2265.0(.28)+1020.0(.38)]}=$$

$$\frac{\$28{,}113.75+[\$385.05+\$683.40]+\$207.50}{2{,}350.0+[634.2+387.6]}=$$

$$\frac{\$29{,}389.70}{3{,}371.8}=\$8.72,\text{ the effective tax rate.}$$

[1] Proof gallons by which distilled spirits derived from eligible flavors exceed 2½% of the total proof gallons in the batch (100.9−(2½%)×3.371.8=16.6).

(Approved by Office of Management and Budget under control number 1512–0203)

(Sec. 6, Pub. L. 96–598, 94 Stat. 3488, as amended (26 U.S.C. 5010))

§ 250.98 [Removed]

Para. 7. Section 250.98 is removed.

Para. 8. Section 250.165 is added to read as follows:

§ 250.165 Certificate of effective tax rate computation.

(a) Where distilled spirits of Puerto Rican manufacture which contain eligible wine or eligible flavors are to be tax determined for shipment to the United States or are to be shipped to the United States without payment of tax for transfer from customs custody to ATF bond, the consignor shall prepare a certificate of effective tax rate computation showing the:

(1) The serial number of ATF Form 5110.31 or 5110.51;

(2) Elements necessary to compute the effective tax rate in accordance with § 250.79a as follows—

(i) Proof gallons of distilled spirits (exclusive of distilled spirits derived from eligible flavors);

(ii) Wine gallons of each eligible wine and the percentage of alcohol by volume of each; and

(iii) Proof gallons of distilled spirits derived from each eligible flavor;

(3) Date of the statement of eligibility for each eligible flavor (see § 250.50a).

(4) Effective tax rate applied to the product.

(5) Signature and title of the consignor.

(b) If the spirits are tax determined for shipment to the United States, the proprietor shall retain the certificate for a period of not less than three years after the last tax determination to which the certificate is applicable. If the spirits are shipped to the United States for transfer from Customs custody to the bonded premises of a distilled spirits plant, the proprietor shall forward the original to the consignee distilled spirits plant in the United States and retain a copy for his files.

(Approved by Office of Management and Budget under control number 1512—0203)

(Sec. 201, Pub. L. 85–859, 72 Stat. 1366, as amended (26 U.S.C. 5232); Sec. 6, Pub. L. 96–598, 94 Stat. 3488, as amended (26 U.S.C. 5010))

Para. 9. Section 250.204a is added to read as follows:

§ 250.204a Verification of eligible wines and eligible flavors.

(a) Any person who, after December 1, 1990, brings into the United States from the Virgin Islands any distilled spirits on which the tax is to be paid or determined at an effective tax rate based in part on the alcohol content derived from eligible flavors or eligible wines shall, before the first tax determinaton at that rate, request and receive a statement of eligibility for each wine or flavor to be used in the computation of the effective tax rate.

(b) To receive a statement of eligibility, the person bringing in the distilled spirits shall submit to the ATF National Laboratory, 1401 Research Boulevard, Rockville, MD 20850, the following:

(1) An 8-ounce sample of each distilled spirits, wine and flavor used in the product;

(2) A statement of composition of each flavor, listing—

(i) The name and percentage of alcohol by volume of the flavor; and

(ii) The name and quantity of each ingredient used in the manufacture of the flavor; and

(3) A statement of the kind and alcoholic content of each wine.

(Approved by Office of Management and Budget under control number 1512–0352)

(Act of August 16, 1954, Pub. L. 591, 68A Stat. 907, as amended (26 U.S.C. 7652); Sec. 201, Pub. L. 85–859, 72 Stat. 1314, as amended (26 U.S.C. 5001); Sec. 6, Pub. L. 96–598, 94 Stat. 3488, as amended (26 U.S.C. 5010))

Para. 10. Section 250.205 is revised to read as follows:

§ 250.205 Certificate.

(a) Every person bringing liquors or articles under this part into the United States from the Virgin Islands, except tourists, shall obtain a certificate in the

English language from the manufacturer for each shipment showing the following information:

(1) The name and address of the consignee.

(2) The kind and brand name.

(3) The quantity thereof as follows—

(i) If distilled spirits, the proof gallons or liters and degree of proof;

(ii) If wine, the taxable grade and wine gallons;

(iii) If beer, the gallons (liquid measure) and the percentage of alcohol by volume; and

(iv) If articles, the kind, quantity, and proof of the liquors used therein.

(4) For liquors manufactured under a formula—

(i) The number and date of the approved formula;

(ii) A declaration that the liquors have been manufactured in accordance with the approved formula; and

(iii) The name and address of the person filing the formula.

(5) The name and address of the producer.

(6) For liquors and articles containing liquors produced outside of the Virgin Islands, the country of origin for each such liquor.

(7) For distilled spirits, a certification by the insular gauger as to whether they were regauged when withdrawn from the insular bonded warehouse and, if regauged, whether they were at the time of withdrawal at the proof indicated on the attached record of gauge.

(8) For distilled spirits which contain eligible wine or eligible flavors, the effective tax rate applied to the product and the elements necessary to compute the effective tax rate in accordance with § 250.262a as follows—

(i) Proof gallons of distilled spirits (exclusive of distilled spirits derived from eligible flavors);

(ii) Wine gallons of each eligible wine and the percentage of alcohol by volume of each;

(iii) Proof gallons of distilled spirits derived from eligible flavors; and

(iv) On or after December 1, 1990, the name of the manufacturer, formula number from ATF F 5530.5 (1678) or 5150.19 and date of approval or the date of the statement of eligibility for each eligible flavor (See § 250.204a); and

(v) After December 1, 1990, the date of the statement of eligibility for each eligible wine.

(b) The person bringing the liquors or articles into the United States shall file the certificate and record of gauge with the district director of customs at the port of entry, at the time of entry summary, as provided in §§ 250.260 and 250.302.

(Approved by the Office of Management and Budget under control number 1512-0352.)

(Sec. 201, Pub. L. 85-859, 72 Stat. 1366, as amended (26 U.S.C. 5232); Sec. 6, Pub. L. 96-598, 94 Stat. 3488, as amended (26 U.S.C. 5010))

Par. 11. Section 250.262 is revised and § 250.262a is added to read as follows:

250.262 Determination of tax on distilled spirits.

(a) If the certificate required by § 250.205 covers distilled spirits, and the distilled spirits are not being transferred under Subparts 0 or Oa of this part, the tax imposed by 26 U.S.C. 7652 which provides for a tax equal to the tax imposed by 26 U.S.C. 5001 will be collected on each proof gallon, and fractional part thereof, contained in the shipment.

(b) A credit against the tax imposed on distilled spirits by 26 U.S.C. 7652 is allowable under 26 U.S.C. 5010 on each proof gallon of alcohol derived from eligible wine or from eligible flavors which do not exceed 2½ percent of the finished product on a proof gallon basis. The credit is allowable at the time the tax is payable as if it constituted a reduction in the rate of tax.

(c) Where credit against the tax is desired, the person liable for the tax shall establish an effective tax rate in accordance with § 250.262a. The effective tax rate established will be applied to each withdrawal or other disposition of the distilled spirits within the United States.

(Approved by the Office of Management and Budget under control number 1512-0352)

(Sec. 201, Pub. L. 85-859, 72 Stat. 1356, as amended (26 U.S.C. 5201); Sec. 6, Pub. L. 96-598, 94 Stat. 3488, as amended (26 U.S.C. 5010), Act of August 16, 1954, Pub. L. 591, 68A Stat. 907, as amended (26 U.S.C. 7652))

§ 250.262a Computation of effective tax rate.

(a) The proprietor shall compute the effective tax rate for distilled spirits containing eligible wine or eligible flavors as the ratio of the numerator and denominator as follows:

(1) The numerator will be the sum of:

(i) The proof gallons of all distilled spirits used in the product (exclusive of distilled spirits derived from eligible flavors), multipled by the tax rate prescribed by 26 U.S.C. 5001;

(ii) The wine gallons of each eligible wine used in the product, multiplied by the tax rate prescribed by 26 U.S.C. 5041(b) (1), (2), or (3), as applicable; and

(iii) The proof gallons of all distilled spirits derived from eligible flavors used in the product, multiplied by the tax rate prescribed by 26 U.S.C. 5001, but only to the extent that such distilled spirits exceed 2½% of the denominator prescribed in paragraph (a)(2) of this section.

(2) The denominator will be the sum of:

(i) The proof gallons of all distilled spirits used in the product, including distilled spirits derived from eligible flavors; and

(ii) The wine gallons of each eligible wine used in the product, multiplied by twice the percentage of alcohol by volume of each, divided by 100.

(b) In determining the effective tax rate, quantities of distilled spirits, eligible wine, and eligible flavors will be expressed to the nearest tenth of a proof gallon. The effective tax rate may be rounded to as many decimal places as the proprietor deems appropriate, provided that, such rate is expressed no less exactly than the rate rounded to the nearest whole cent, and the effective tax rates for all products will be consistently expressed to the same number of decimal places. In such case, if the number is less than five it will be dropped; if it is five or over, a unit will be added.

(c) The following is an example of the use of the formula.

BATCH RECORD

Distilled spirits	2249.1 proof gallons.
Eligible wine (14% alcohol by volume).	2265.0 wine gallons.
Eligible wine (19% alcohol by volume).	1020.0 wine gallons.
Eligible flavors	100.9 proof gallons.

$$\frac{2249.1(\$12.50)+[2265.0(\$.17)+1020(\$.67)]+16.6^{1}(\$12.50)}{2249.1+100.9+[2265.0(.28)+1020.0(.38)]}=$$

$$\frac{\$28,113.75+[\$385.05+\$683.40]+\$207.50}{2,350.0+[634.2+387.6]}=$$

$$\frac{\$29,389.70}{3,371.8}=\$8.72, \text{ the effective tax rate.}$$

[1] Proof gallons by which distilled spirits derived from eligible flavors exceed 2½% of the total proof gallons in the batch (100.9−(2½%)×3.371.8=16.6).

(Approved by the Office of Management and Budget under control number 1512–0352.)

(Sec. 6, Pub. L. 96–598, 94 Stat. 3488, as amended (26 U.S.C. 5010))

Section D. part 251 is amended as follows:

PART 251—IMPORTATION OF DISTILLED SPIRITS, WINES, AND BEER

Paragraph 1. The authority citation for part 251 is revised to read as follows:

Authority: 5 U.S.C. 552(a), 19 U.S.C. 81c, 1202; 26 U.S.C. 5001, 5007, 5008, 5010, 5041, 5051, 5054, 5061, 5111, 5112, 5114, 5121, 5122, 5124, 5201, 5207, 5232, 5273, 5301, 5313, 5555, 6302, 7805.

Para. 2. The table of contents is amended by adding § 251.40a, § 251.76 with the undesignated center heading preceding it, and § 251.77, to read as follows:

Sec.

* * * * *

§ 251.40a Computation of effective tax rate.

* * * * *

Wine and Flavors Content of Distilled Spirits

§ 251.76 Approval and certification of wine and flavors content.

§ 251.77 Standard effective tax rate.

* * * * *

§ 251.11 [Amended]

Para. 3. Section 251.11 is amended by adding, in alphabetical order, the definitions of the following terms:

§ 251.11 Meaning of terms.

* * * * *

Effective tax rate. The net tax rate after reduction for any credit allowable under 26 U.S.C. 5010 for wine and flavor content at which the tax imposed on distilled spirits by 26 U.S.C. 5001 is paid or determined.

* * * * *

Eligible flavor. A flavor which:

(1) Is of a type that is eligible for drawback of tax under 26 U.S.C. 5134,

(2) Was not manufactured on the premises of a distilled spirits plant, and

(3) Was not subjected to distillation on distilled spirits plant premises such that the flavor does not remain in the finished product.

Eligible wine. A wine containing not more than 0.392 gram of carbon dioxide per 100 milliliters of wine which has not been subject to distillation at a distilled spirits plant after receipt in bond.

* * * * *

Para. 4. Section 251.40 is revised and § 251.40a is added to read as follows:

§ 251.40 Distilled spirits.

(a) A tax is imposed on all distilled spirits in customs bonded warehouses or imported into the United States at the rate prescribed by 26 U.S.C. 5001 on each proof gallon and a proportionate tax at a like rate on all fractional parts of each proof gallon. All products of distillation, by whatever name known, which contain distilled spirits, are considered to be distilled spirits and are taxed as such. The tax will be determined at the time of importation, or, if entered into bond, at the time of withdrawal therefrom.

(b) A credit against the tax imposed on distilled spirits by 26 U.S.C. 5001 is allowable under 26 U.S.C. 5010 on each proof gallon of alcohol derived from eligible wine or from eligible flavors which do not exceed 2½ percent of the finished product on a proof gallon basis. The credit is allowable at the time the tax is payable as if it constituted a reduction in the rate of tax.

(c) Where credit against the tax is desired, the person liable for the tax shall establish an effective tax rate in accordance with § 251.40a. The effective tax rate established will be applied to each entry.

(Approved by the Office of Management and Budget under control number 1512–0352.)

(Sec. 201, Pub. L. 85–859, 72 Stat. 1314, as amended (26 U.S.C. 5001); Sec. 201, Pub. L. 85–859, 72 Stat. 1356, as amended (26 U.S.C. 5201); Sec. 6, Pub. L. 96–598, 94 Stat. 3488, as amended (26 U.S.C. 5010))

§ 251.40a Computation of effective tax rate.

(a) The proprietor shall compute the effective tax rate for distilled spirits containing eligible wine or eligible flavors as the ratio of the numerator and denominator as follows:

(1) The numerator will be the sum of:

(i) The proof gallons of all distilled spirits used in the product (exclusive of distilled spirits derived from eligible flavors), multiplied by the tax rate prescribed by 26 U.S.C. 5001;

(ii) The wine gallons of each eligible wine used in the product, multiplied by the tax rate prescribed by 26 U.S.C. 5041(b)(1), (2), or (3), as applicable; and

(iii) The proof gallons of all distilled spirits derived from eligible flavors used in the product, multiplied by the tax rate prescribed by 26 U.S.C. 5001, but only to the extent that such distilled spirits exceed 2½% of the denominator prescribed in paragraph (a)(2) of this section.

(2) The denominator will be the sum of:

(i) The proof gallons of all distilled spirits used in the product, including distilled spirits derived from eligible flavors; and

(ii) The wine gallons of each eligible wine used in the product, multiplied by twice the percentage of alcohol by volume of each, divided by 100.

(b) In determining the effective tax rate, quantities of distilled spirits, eligible wine, and eligible flavors will be expressed to the nearest tenth of a proof gallon. The effective tax rate may be rounded to as many decimal places as the proprietor deems appropriate, provided that, such rate is expressed no less exactly than the rate rounded to the nearest whole cent, and the effective tax rates for all products will be consistently expressed to the same number of decimal places. In such case, if the number is less than five it will be dropped; if it is five or over, a unit will be added.

(c) The following is an example of the use of the formula.

BATCH RECORD

Distilled spirits	2249.1 proof gallons.	Eligible wine (14% alcohol by volume).	2265.0 wine gallons.	Eligible flavors	100.9 proof gallons.
		Eligible wine (19% alcohol by volume).	1020.0 wine gallons.		

$$\frac{2249.1(\$12.50)+[2265.0(\$.17)+1020(\$.67)]+16.6\ ^{1}\ (\$12.50)}{2249.1+100.9+[2265.0(.28)+1020.0(.38)]}=$$

$$\frac{\$28,113.75+[\$385.05+\$683.40]+\$207.50}{2,350.0+[634.2+387.6]}=$$

$$\frac{\$29,389.70}{3,371.8}=\$8.72,\text{ the effective tax rate.}$$

[1] Proof gallons by which distilled spirits derived from eligible flavors exceed 2½% of the total proof gallons in the batch (100.9−(2½%)×3,371.8=16.6).

(Approved by the Office of Management and Budget under control number 1512-0352.)

(Sec. 6, Pub. L. 96-598, 94 Stat. 3488, as amended (26 U.S.C. 5010))

Para. 5. Immediately after § 251.75, an undesignated center heading and §§ 251.76 and 251.77 are added to read as follows:

Wine and Flavors Content of Distilled Spirits

§ 251.76 Approval and certification of wine and flavors content.

(a) Any person who, after December 1, 1990, imports into the United States distilled spirits on which the tax is to be paid or determined at an effective tax rate based in whole, or in part, on the alcohol content derived from eligible wine or eligible flavors which have not been previously approved on ATF Form 5530.5 (1678) shall, before the first tax determination at that rate, request and receive a statement of eligibility for each wine or flavor to be used in the computation of the effective tax rate.

(b) To receive a statement of eligibility, the importer shall cause to be submitted to the ATF National Laboratory, 1401 Research Boulevard, Attn: NBA, Rockville, MD 20850, the following:

(1) An 8-ounce sample of each distilled spirits, wine and flavor contained in the product; and

(2) A statement of composition listing—

(i) For wine, the kind (class and type) and percentage of alcohol by volume; and

(ii) For flavors, the name and percentage of alcohol by volume, and the name and quantity of each ingredient used in the manufacture of the flavor.

(c) Each time distilled spirits containing eligible wine or eligible flavors are imported into the United States, the importer shall prepare a certificate of effective tax rate computation showing the following:

(1) Name, address, and permit number of the importer;

(2) Kind (class and type) of product;

(3) Elements necessary to compute the effective tax rate in accordance with § 251.40a as follows—

(i) Proof gallons of distilled spirits (exclusive of distilled spirits derived from eligible flavors);

(ii) Wine gallons of each eligible wine and the percentage of alcohol by volume of each; and

(iii) Proof gallons of distilled spirits derived from eligible flavors;

(4) After December 1, 1990, the date of the statement of eligibility of each eligible wine and of each eligible flavor;

(5) Effective tax rate applied to the product; and

(6) Signature of the importer or other duly authorized person under the following declaration:

I declare under the penalties of perjury that this certificate of effective tax rate computation has been examined by me and, to the best of my knowledge and belief, is true, correct, and complete.

(d) The importer shall file the certificate of effective tax rate computation with the district director of customs at the port of entry, at the time of entry summary, or, for distilled spirits to be withdrawn from customs custody under the provisions of subpart L of this part, furnish a copy to the proprietor of the distilled spirits plant to which the distilled spirits are transferred.

(Approved by the Office of Management and Budget under control number 1512-0352)

(Sec. 6, Pub. L. 96-598, 94 Stat. 3488, as amended (26 U.S.C. 5010))

§ 251.77 Standard effective tax rate.

(a) In lieu of preparing a certificate of effective tax rate computation each time distilled spirits containing eligible wine or eligible flavors are imported as prescribed in § 251.76(c), an importer may have a standard effective tax rate established based on the least quantity and the lowest alcohol content of eligible wine or eligible flavors used in the manufacture of the product.

(b) To have a standard effective tax rate established, the importer shall cause to be submitted to the ATF National Laboratory, 1401 Research Boulevard, Rockville, MD 20850, the following:

(1) The samples prescribed in § 251.76(b)(1) and an 8-ounce sample of the finished product;

(2) The statement of composition prescribed in § 251.76(b)(2);

(3) A statement of composition for the finished product listing the

(i) Name of the product;

(ii) Quantity, alcohol content (percentage of alcohol by volume), and the kind (class and type) of each eligible wine or the name of each eligible flavor used in the manufacture of the product; and

(iii) Standard effective tax rate for the product computed in accordance with § 251.40a.

(c) Where a standard effective tax rate has been previously approved for a product, an importer, in lieu of having a standard effective tax rate established, may use that rate. An importer desiring to use a previously approved standard effective tax rate shall obtain a copy of the approval from the person to whom it was issued and, over the signature of the importer or other duly authorized person, place the following declaration:

I declare under the penalties of perjury that this approval has been examined by me and, to best of my knowledge and belief, the standard effective tax rate established for this product is applicable to all like products contained in this shipment.

(d) A standard effective tax rate may not be employed until approved by the ATF National Laboratory. The importer shall file or furnish a copy of the standard effective tax rate approval in the manner prescribed in § 251.76(d). The use of a standard effective tax rate shall to relieve an importer from the payment of any tax found to be due. The Director may at any time require an importer to immediately discontinue the use of a standard effective tax rate.

(Approved by the Office of Management and Budget under control Number 1512–0352)

(Sec. 6, Pub. L. 96–598, 94 Stat. 3488, as amended (26 U.S.C. 5010))

Signed: February 14, 1990.

Daniel R. Black,

Acting Director.

Approved: March 13, 1990.

Peter K. Nunez,

Assistant Secretary, Enforcement.

[FR Doc. 90–9804 Filed 4–27–90; 8:45 am]

BILLING CODE 4810-31-M

Reader Aids

Federal Register

Vol. 55, No. 83

Monday, April 30, 1990

INFORMATION AND ASSISTANCE

Federal Register

Index, finding aids & general information	523-5227
Public inspection desk	523-5215
Corrections to published documents	523-5237
Document drafting information	523-5237
Machine readable documents	523-3447

Code of Federal Regulations

Index, finding aids & general information	523-5227
Printing schedules	523-3419

Laws

Public Laws Update Service (numbers, dates, etc.)	523-6641
Additional information	523-5230

Presidential Documents

Executive orders and proclamations	523-5230
Public Papers of the Presidents	523-5230
Weekly Compilation of Presidential Documents	523-5230

The United States Government Manual

General information	523-5230

Other Services

Data base and machine readable specifications	523-3408
Guide to Record Retention Requirements	523-3187
Legal staff	523-4534
Library	523-5240
Privacy Act Compilation	523-3187
Public Laws Update Service (PLUS)	523-6641
TDD for the deaf	523-5229

FEDERAL REGISTER PAGES AND DATES, APRIL

12163-12326....2
12327-12470....3
12471-12626....4
12627-12804....5
12805-13100....6
13100-13250....9
13251-13498....10
13499-13752....11
13753-13896....12
13897-14076....13
14077-14228....16
14229-14406....17
14407-14826....18
14827-14960....19
14961-15212....20
15213-17266....23
17267-17410....24
17411-17588....25
17589-17746....26
17747-17926....27
17927-18072....30

CFR PARTS AFFECTED DURING APRIL

At the end of each month, the Office of the Federal Register publishes separately a List of CFR Sections Affected (LSA), which lists parts and sections affected by documents published since the revision date of each title.

1 CFR

Proposed Rules:
305....13279, 13538

3 CFR

Proclamations:
4941 (See Proc. 6120)
5104 (Terminated by Proc. 6210)
6111....12469
6112....13101
6113....13495
6114....13497
6115....13753
6116....15205
6117....17411
6118....17413
6119....17415
6120....17744
6121....17748

Executive Orders:
12345 (Amended by EO 12709)....13097
12635 (Revoked by EO 12710)....13099
12709....13097
12710....13099
12711....13897

Administrative Orders:
Presidential Determinations:
No. 90-13 (Cancelled by Presidential Determination No. 90-14 due to a clerical error. Not published in **Federal Register**....14077
No. 90-14 of Mar. 14, 1990....14077
No. 90-15 of Mar. 28, 1990....17417
No. 90-16 of Mar. 31, 1990....14079
Memorandums:
April 18, 1990....15207

4 CFR

Proposed Rules:
21....12834

5 CFR

307....13499
315....12327
316....13499
531....14827
841....14229
890....13501
2634....14407

7 CFR

1e....14231
52....12805-12990
55....13251
56....13251
59....13251
70....13251
225....13454
354....15213
910....12805, 13899, 14961, 17749
911....14232
915....14232
946....12806
959....12807
985....14409
989....12808
1006....17589
1012....17589
1013....17589
1032....12810
1210....13253
1770....17352
1823....13502
1901....13502
1940....12811
1942....12811, 13502
1944....13502
1948....13502
1965....13502

Proposed Rules:
52....13280
210....13156
215....13156
220....13156
225....13156
226....13156
227....13156
246....13156
250....12838, 13156
251....12838
301....14037
352....15232
400....17278
905....12367
917....12663
921....12846
922....12846
923....12846
924....12846
927....12368
947....14287
981....17618
985....12498
989....13540
998....14096
1001....12369
1002....12369
1004....12369
1005....12369
1006....12369
1007....12369

1011 ... 12369
1012 ... 12369
1013 ... 12369
1030 ... 12369
1032 ... 12369
1033 ... 12369
1036 ... 12369
1040 ... 12369
1044 ... 12369
1046 ... 12369
1049 ... 12369
1050 ... 12369
1064 ... 12369
1065 ... 12369
1068 ... 12369
1075 ... 12369
1076 ... 12369
1079 ... 12369
1093 ... 12369
1094 ... 12369
1096 ... 12369
1097 ... 12369
1098 ... 12369
1099 ... 12369
1106 ... 12369
1108 ... 12369
1120 ... 12369
1124 ... 12369
1126 ... 12369
1131 ... 12369
1132 ... 12369
1134 ... 12369
1135 ... 12369
1137 ... 12369
1138 ... 12369
1139 ... 12369, 12848
1485 ... 17618
1494 ... 17443
1714 ... 12194, 12199

8 CFR

103 ... 12627, 12628, 12815
210 ... 12629
235 ... 14234
242 ... 12627
287 ... 12627
299 ... 12628
499 ... 12628

Proposed Rules:

103 ... 12666

9 CFR

1 ... 12630
71 ... 12631, 15320–15900
75 ... 13504
78 ... 12163, 15320–15900
82 ... 12631
91 ... 12632
92 ... 12632

Proposed Rules:

3 ... 12202, 12667
78 ... 12848
101 ... 15233
113 ... 15233
166 ... 15236
201 ... 13796
318 ... 12203
381 ... 12203

10 CFR

11 ... 14288
25 ... 14288
50 ... 12163
72 ... 13883
95 ... 14288
590 ... 14916

Proposed Rules:

2 ... 12370
30 ... 12374, 13542
40 ... 12374, 13542
50 ... 12374, 13542
55 ... 14288
60 ... 12374, 13542
61 ... 12374, 13542, 13797
70 ... 12374, 13542
72 ... 12374, 13542
110 ... 12374, 13542
150 ... 12374, 13542
708 ... 12668, 17453
725 ... 15237

11 CFR

110 ... 13507

Proposed Rules:

106 ... 12499
9003 ... 12499
9007 ... 12499
9033 ... 12499
9035 ... 12499
9038 ... 12499

12 CFR

19 ... 13010
202 ... 12471, 14830
205 ... 12635
226 ... 13103, 17749
500 ... 13507
543 ... 13507
544 ... 13507
545 ... 13507
546 ... 13507
550 ... 13507
552 ... 13507
563 ... 13507
563b ... 13507
563f ... 13507
567 ... 13507
574 ... 13507
584 ... 13507
614 ... 12472
615 ... 12473
620 ... 12472
621 ... 12472
1609 ... 14081

Proposed Rules:

21 ... 14424
216 ... 12850
226 ... 13282
701 ... 12852
741 ... 12852
747 ... 12855
1611 ... 13543, 17715

13 CFR

121 ... 17419
122 ... 17267

Proposed Rules:

120 ... 17280

14 CFR

13 ... 15110
14 ... 15110
21 ... 12328, 15214, 17589
23 ... 12328, 15214, 17589
25 ... 13474
39 ... 12332, 12473–12477, 12815–12817, 13259–13261, 13755–13760, 14411, 14412, 15217–15222, 17420, 17594, 17927–17930
71 ... 12336, 12482, 13263, 13264, 13761, 14234–14237, 15223, 15320–15900, 17421, 17422, 17595, 17931
73 ... 13761, 17931
75 ... 17423
91 ... 13444, 15320–15900, 17736
95 ... 13762
97 ... 15244, 17424
121 ... 13326–13332
125 ... 13332
129 ... 13332
135 ... 13444, 15320–15900
382 ... 12336

Proposed Rules:

Ch. I ... 12383, 13798, 15240, 17987
13 ... 15134
21 ... 12857
23 ... 12857
25 ... 12316, 13886
29 ... 12316
39 ... 12503, 12859–12863, 13284, 13799, 13801, 14290, 14292, 14426, 14428, 15243, 17453, 17631, 17860, 17987–17998
71 ... 12384, 13032, 13285–13287, 13802, 13803, 14293–14295, 17632
73 ... 13804
75 ... 13287
91 ... 12316
93 ... 17584
119 ... 14404
121 ... 12316, 13886, 14404
125 ... 12316, 14404
127 ... 14404
135 ... 12316, 13886, 14404, 17358
241 ... 14296
1266 ... 13912

15 CFR

776 ... 13121
779 ... 13121
799 ... 12635, 13121, 14089, 17530

Proposed Rules:

295 ... 12504

16 CFR

305 ... 13264
1700 ... 13123–13127

Proposed Rules:

1027 ... 13805
1700 ... 13157

17 CFR

1 ... 17932
30 ... 14238
200 ... 17933
230 ... 17933
241 ... 17949

Proposed Rules:

155 ... 13288
156 ... 13545

18 CFR

37 ... 14961
270 ... 17425
272 ... 17425
284 ... 12167
381 ... 12169, 13899

19 CFR

141 ... 17596
142 ... 12342
146 ... 14966
162 ... 17596
171 ... 17596
178 ... 12342, 17596
191 ... 17597

Proposed Rules:

101 ... 17633
141 ... 12385

20 CFR

404 ... 17530
416 ... 14916
626 ... 12992
636 ... 12992
638 ... 12992
675 ... 12992
676 ... 12992
677 ... 12992
678 ... 12992
679 ... 12992
680 ... 12992
684 ... 12992
685 ... 12992
688 ... 12992
689 ... 12992

Proposed Rules:

416 ... 17999

21 CFR

5 ... 14916
74 ... 12171
101 ... 17431
173 ... 12171
176 ... 13518
178 ... 12171, 12344, 13521
179 ... 14413
300 ... 14968
430 ... 14239
442 ... 14239
444 ... 14968
452 ... 14090
455 ... 14378
510 ... 13901, 13902, 14830, 17951
514 ... 14831
522 ... 13768, 13902
544 ... 13902
558 ... 15099, 17598, 17951
610 ... 14037
640 ... 14037
801 ... 17599

Proposed Rules:

101 ... 14429
872 ... 17455

23 CFR

658 ... 17952

Proposed Rules:

655 ... 17634
1327 ... 12509

24 CFR

882 ... 14243
885 ... 14243

26 CFR

1 ... 13521, 13769
301 ... 13289, 13521, 14244
602 ... 14244

Proposed Rules:

1 ... 13808, 14429, 14437, 17455, 17635, 17758
31 ... 17758
301 ... 12386
602 ... 14429, 14437, 17758

27 CFR

4 ... 17960
12 ... 17960
19 ... 18058
197 ... 18058
250 ... 18058
251 ... 18058

Proposed Rules:

4 ... 12522
300 ... 17530

28 CFR

50 ... 13129
345 ... 14917
544 ... 14379
549 ... 17354
552 ... 17354

Proposed Rules:

2 ... 12524

29 CFR

18 ... 13218, 14038
503 ... 14231
510 ... 12778
1401 ... 17602
1601 ... 14245
1602 ... 14245
1910 ... 12818, 13694, 14072
2610 ... 13770
2622 ... 13770
2644 ... 13771
2676 ... 13772

Proposed Rules:

1910 ... 13360, 13423

30 CFR

75 ... 14228
914 ... 12636, 15266
917 ... 13131
918 ... 13133
931 ... 17604
935 ... 14970
944 ... 13773
946 ... 12637

Proposed Rules:

57 ... 12204
206 ... 13157
243 ... 12386
723 ... 12624
780 ... 14319
785 ... 14319
816 ... 14319
845 ... 12624
904 ... 15245
906 ... 17758
917 ... 13158
920 ... 17455–17458
926 ... 13552
936 ... 13915, 14979
938 ... 17644
946 ... 14038

31 CFR

2 ... 13134
515 ... 12172

32 CFR

172 ... 13903
199 ... 13265
701 ... 12638
706 ... 14415, 14416
752 ... 12173

Proposed Rules:

199 ... 15246

33 CFR

100 ... 12482, 13134, 14417, 14418, 17607, 17750, 17969
117 ... 12819, 12820, 13275, 13522, 17608
135 ... 17267
151 ... 17268
165 ... 12348, 13134–13136, 13904, 17269, 17969

Proposed Rules:

52 ... 18001
100 ... 13808, 13916, 14839
110 ... 13917
117 ... 12668, 17645
207 ... 13448

34 CFR

76 ... 14810
77 ... 14810
222 ... 17576
298 ... 14810
690 ... 12784

Proposed Rules:

86 ... 17384
346 ... 14220

35 CFR

119 ... 15228

36 CFR

1155 ... 12638
1284 ... 13553

Proposed Rules:

1284 ... 17281

38 CFR

3 ... 12348, 13522, 13529, 17270, 17530
17 ... 13531
21 ... 12482, 12820, 13529, 17270

Proposed Rules:

17 ... 13554
21 ... 17281

39 CFR

111 ... 14419, 17715
776 ... 12821

Proposed Rules:

111 ... 17645

40 CFR

51 ... 14246
52 ... 12822–12827, 13904, 14419, 14831, 14972, 17433–17435, 17751, 17752
61 ... 12444, 13480, 14037
81 ... 13906, 14092
180 ... 12483, 14429, 14832, 17437
185 ... 14832
271 ... 14280, 17273
280 ... 17753
373 ... 14208
721 ... 17326
798 ... 12639
799 ... 12639

Proposed Rules:

52 ... 12387, 12669, 17759, 17760, 18005
61 ... 13482
62 ... 14322
81 ... 13555
86 ... 12677, 17532
180 ... 12525, 13917, 17460
228 ... 13289
260 ... 17862
261 ... 13556, 14323, 17283, 17862
264 ... 17862
270 ... 17862
280 ... 17763, 17767
281 ... 12205
716 ... 13164
761 ... 12866
799 ... 17769

41 CFR

60–30 ... 13137
101–45 ... 17609
101–46 ... 17609
302–1 ... 14916

42 CFR

405 ... 14376
412 ... 14282, 15150
413 ... 15150

Proposed Rules:

1000 ... 12205, 17461
1001 ... 12205, 17461
1002 ... 12205, 17461
1003 ... 12205, 17461
1004 ... 12205, 17461
1005 ... 12205, 17461
1006 ... 12205, 17461
1007 ... 12205, 17461

43 CFR

1344 ... 14283
1535 ... 14283
3100 ... 12350
3140 ... 12350
3160 ... 12350
3830 ... 17754
4100 ... 12350
4484 ... 14284
5440 ... 17754
9180 ... 12350
9260 ... 12350

Public Land Orders:

1396 (Revoked in part by PLO 6778) ... 17755
5187 (Revoked in part by PLO 6778) ... 17755
6772 ... 12352
6773 ... 14283
6774 ... 14284
6775 ... 14284
6776 ... 14422
6778 ... 17755

44 CFR

64 ... 13534, 15229
67 ... 13784

Proposed Rules:

67 ... 13568, 15247

45 CFR

613 ... 12644
1611 ... 12352

Proposed Rules:

96 ... 12678
670 ... 14980

46 CFR

10 ... 14792
15 ... 14792
25 ... 14920
30 ... 17275
150 ... 17275
151 ... 17275
153 ... 17275
201 ... 12353
203 ... 12353
401 ... 17580
403 ... 17580
404 ... 17580
510 ... 13293
580 ... 13293
582 ... 13293

Proposed Rules:

25 ... 14922
28 ... 14924
221 ... 14040

47 CFR

1 ... 12360
15 ... 13907, 14285
22 ... 13883
73 ... 12360–12362, 12485, 12829, 12830, 13792, 15230, 15231, 17438, 17756–17767, 17970
76 ... 14285
87 ... 13535
94 ... 12360

Proposed Rules:

0 ... 17461
1 ... 12390, 17461
2 ... 17461
22 ... 12390
32 ... 14438
61 ... 12526, 18007
65 ... 12526
69 ... 12526
73 ... 12390, 12391, 12868–12870, 13810, 13811, 14438, 15247, 15248, 17462, 17463, 17769–17771, 18009
74 ... 13296
80 ... 12526, 13298, 14328
90 ... 17464
95 ... 17461

48 CFR

3 ... 13277
52 ... 13277
302 ... 13535
314 ... 13535
315 ... 13535
317 ... 13535
319 ... 13536
501 ... 13277
1552 ... 13535
1801 ... 12174
1803 ... 12174
1806 ... 12174
1807 ... 12174
1819 ... 12174
1822 ... 12174
1825 ... 12174
1837 ... 12174
1839 ... 12174
1842 ... 12174
1845 ... 12174
1852 ... 12174
2804 ... 14093

Proposed Rules:

219 ... 13744, 14329
220 ... 12870
247 ... 13574
252 ... 12870, 13574, 13744, 14329, 17464
1509 ... 17724
1510 ... 17724, 17731
1512 ... 17724
1527 ... 17724

1552 ..... 17724, 17731

49 CFR

531 12485
533 ..... 12487, 13883
538 17611
571 ..... 13138, 13575, 17970
591 17438
1003 14285
1160 14285
1162 14285
1168 14285

Proposed Rules:

23 17465
28 14439
240 ..... 12236, 17771
390 13812
391 13812
531 14439
571 12871
575 13165
1039 12392
1056 13298
1160 13814
1244 ..... 12237, 18009

50 CFR

16 17439
18 14973
17 ..... 12178, 12788, 12831, 13488, 13907
21 17352
226 12191
227 ..... 12191, 12645, 17441
611 14286
642 14833
651 12362
658 13792
659 13153
661 14837
672 ..... 12832–12990, 14286, 14978, 17442
675 14094

Proposed Rules:

17 ..... 13299, 13576, 13578, 13919, 17465–17475, 17552–17555, 17646–17648, 18010
20 15249
36 13922
80 13166
641 12393
642 14981
651 12237

LIST OF PUBLIC LAWS

Note: No public bills which have become law were received by the Office of the Federal Register for inclusion in today's **List of Public Laws.**

Last List April 27, 1990

CFR CHECKLIST

This checklist, prepared by the Office of the Federal Register, is published weekly. It is arranged in the order of CFR titles, prices, and revision dates.

An asterisk (*) precedes each entry that has been issued since last week and which is now available for sale at the Government Printing Office.

New units issued during the week are announced on the back cover of the daily **Federal Register** as they become available.

A checklist of current CFR volumes comprising a complete CFR set, also appears in the latest issue of the LSA (List of CFR Sections Affected), which is revised monthly.

The annual rate for subscription to all revised volumes is $620.00 domestic, $155.00 additional for foreign mailing.

Order from Superintendent of Documents, Government Printing Office, Washington, DC 20402. Charge orders (VISA, MasterCard, or GPO Deposit Account) may be telephoned to the GPO order desk at **(202) 783-3238** from 8:00 a.m. to 4:00 p.m. eastern time, Monday—Friday (except holidays).

Title	Price	Revision Date
1, 2 (2 Reserved)	$11.00	Jan. 1, 1990
3 (1989 Compilation and Parts 100 and 101)	11.00	[1] Jan. 1, 1990
4	16.00	Jan. 1, 1990
5 Parts:		
1-699	15.00	Jan. 1, 1990
700-1199	13.00	Jan. 1, 1990
1200-End, 6 (6 Reserved)	17.00	Jan. 1, 1990
7 Parts:		
0-26	15.00	Jan. 1, 1990
27-45	12.00	Jan. 1, 1990
46-51	17.00	Jan. 1, 1990
52	24.00	Jan. 1, 1990
*53-209	19.00	Jan. 1, 1990
210-299	24.00	Jan. 1, 1989
300-399	12.00	Jan. 1, 1989
400-699	20.00	Jan. 1, 1990
700-899	22.00	Jan. 1, 1990
900-999	29.00	Jan. 1, 1990
*1000-1059	16.00	Jan. 1, 1990
1060-1119	13.00	Jan. 1, 1990
1120-1199	10.00	Jan. 1, 1990
*1200-1499	18.00	Jan. 1, 1990
1500-1899	11.00	Jan. 1, 1990
1900-1939	11.00	Jan. 1, 1990
1940-1949	21.00	Jan. 1, 1990
1950-1999	24.00	Jan. 1, 1990
2000-End	9.50	Jan. 1, 1990
8	14.00	Jan. 1, 1990
9 Parts:		
1-199	20.00	Jan. 1, 1990
200-End	18.00	Jan. 1, 1990
10 Parts:		
0-50	21.00	Jan. 1, 1990
51-199	17.00	Jan. 1, 1990
200-399	13.00	[2] Jan. 1, 1987
400-499	21.00	Jan. 1, 1990
*500-End	26.00	Jan. 1, 1990
11	11.00	Jan. 1, 1990
12 Parts:		
1-199	12.00	Jan. 1, 1990
200-219	12.00	Jan. 1, 1990
220-299	21.00	Jan. 1, 1990
300-499	15 00	Jan. 1, 1989
500-599	20.00	Jan. 1, 1989
600-End	14.00	Jan. 1, 1989
13	25 00	Jan. 1, 1990
14 Parts:		
*1-59	25.00	Jan. 1, 1990
60-139	21.00	Jan. 1, 1989
140-199	10 00	Jan. 1, 1990
200-1199	21.00	Jan. 1, 1989
1200-End	13.00	Jan. 1, 1990
15 Parts:		
0-299	11.00	Jan. 1, 1990
300-799	22.00	Jan. 1, 1989
800-End	15 00	Jan. 1, 1990
16 Parts:		
0-149	6.00	Jan. 1, 1990
150-999	14.00	Jan. 1, 1990
1000-End	20.00	Jan. 1, 1990
17 Parts:		
1-199	15 00	Apr. 1, 1989
200-239	16.00	Apr. 1, 1989
240-End	22.00	Apr. 1, 1989
18 Parts:		
1-149	16 00	Apr. 1, 1989
150-279	16 00	Apr. 1, 1989
280-399	14.00	Apr. 1, 1989
400-End	9.50	Apr. 1, 1989
19 Parts:		
1-199	28.00	Apr. 1, 1989
200-End	9.50	Apr 1, 1989
20 Parts:		
1-399	13.00	Apr. 1, 1989
400-499	24.00	Apr. 1, 1989
500-End	28.00	Apr. 1, 1989
21 Parts:		
1-99	13.00	Apr. 1, 1989
100-169	15 00	Apr. 1, 1989
170-199	17.00	Apr. 1, 1989
200-299	6.00	Apr. 1, 1989
300-499	28.00	Apr. 1, 1989
500-599	21.00	Apr. 1, 1989
600-799	8.00	Apr. 1, 1989
800-1299	17.00	Apr. 1, 1989
1300-End	6.50	Apr. 1, 1989
22 Parts:		
1-299	22.00	Apr. 1, 1989
300-End	17.00	Apr. 1, 1989
23	17.00	Apr. 1, 1989
24 Parts:		
0-199	19.00	Apr. 1, 1989
200-499	28.00	Apr. 1, 1989
500-699	11.00	Apr. 1, 1989
700-1699	23.00	Apr. 1, 1989
1700-End	13.00	Apr. 1, 1989
25	25.00	Apr. 1, 1989
26 Parts:		
§§ 1.0-1-1.60	15.00	Apr. 1, 1989
§§ 1.61-1.169	25.00	Apr. 1, 1989
§§ 1.170-1.300	18 00	Apr. 1, 1989
§§ 1.301-1.400	15.00	Apr. 1, 1989
§§ 1.401-1.500	28.00	Apr. 1, 1989
§§ 1.501-1.640	16 00	Apr. 1, 1989
§§ 1.641-1.850	19 00	Apr. 1, 1989
§§ 1.851-1.1000	31 00	Apr. 1, 1989
§§ 1.1001-1.1400	17.00	Apr. 1,1989
§§ 1.1401-End	23.00	Apr. 1, 1989
2-29	20.00	Apr. 1, 1989
30-39	14.00	Apr. 1, 1989
40-49	13.00	Apr. 1, 1989
50-299	16 00	Apr. 1, 1989
300-499	16 00	Apr. 1, 1989
500-599	7.00	Apr. 1, 1989
600-End	6.50	Apr. 1, 1989
27 Parts:		
1-199	24 00	Apr. 1, 1989
200-End	14 00	Apr. 1, 1989
28	27.00	July 1, 1989

Title	Price	Revision Date
29 Parts:		
0–99	17.00	July 1, 1989
100–499	7.50	July 1, 1989
500–899	26.00	July 1, 1989
900–1899	12.00	July 1, 1989
1900–1910 (§§ 1901.1 to 1910.441)	24.00	July 1, 1989
1910 (§§ 1910.1000 to end)	13.00	July 1, 1989
1911–1925	9.00	July 1, 1989
1926	11.00	July 1, 1989
1927–End	25.00	July 1, 1989
30 Parts:		
0–199	21.00	July 1, 1989
200–699	14.00	July 1, 1989
700–End	20.00	July 1, 1989
31 Parts:		
0–199	14.00	July 1, 1989
200–End	18.00	July 1, 1989
32 Parts:		
1–39, Vol. I	15.00	[3] July 1, 1984
1–39, Vol. II	19.00	[3] July 1, 1984
1–39, Vol. III	18.00	[3] July 1, 1984
1–189	23.00	July 1, 1989
190–399	28.00	July 1, 1989
400–629	22.00	July 1, 1989
630–699	13.00	July 1, 1989
700–799	17.00	July 1, 1989
800–End	19.00	July 1, 1989
33 Parts:		
1–199	30.00	July 1, 1989
200–End	20.00	July 1, 1989
34 Parts:		
1–299	22.00	Nov. 1, 1989
300–399	14.00	Nov. 1, 1989
400–End	27.00	Nov. 1, 1989
35	10.00	July 1, 1989
36 Parts:		
1–199	12.00	July 1, 1989
200–End	21.00	July 1, 1989
37	14.00	July 1, 1989
38 Parts:		
0–17	24.00	Sept. 1, 1989
18–End	21.00	Sept. 1, 1989
39	14.00	July 1, 1989
40 Parts:		
1–51	25.00	July 1, 1989
52	25.00	July 1, 1989
53–60	29.00	July 1, 1989
61–80	11.00	July 1, 1989
81–85	11.00	July 1, 1989
86–99	25.00	July 1, 1989
100–149	27.00	July 1, 1989
150–189	21.00	July 1, 1989
190–299	29.00	July 1, 1989
300–399	10.00	July 1, 1989
400–424	23.00	July 1, 1989
425–699	23.00	July 1, 1989
700–789	15.00	July 1, 1989
790–End	21.00	July 1, 1989
41 Chapters:		
1, 1–1 to 1–10	13.00	[4] July 1, 1984
1, 1–11 to Appendix, 2 (2 Reserved)	13.00	[4] July 1, 1984
3–6	14.00	[4] July 1, 1984
7	6.00	[4] July 1, 1984
8	4.50	[4] July 1, 1984
9	13.00	[4] July 1, 1984
10–17	9.50	[4] July 1, 1984
18, Vol. I, Parts 1–5	13.00	[4] July 1, 1984
18, Vol. II, Parts 6–19	13.00	[4] July 1, 1984
18, Vol. III, Parts 20–52	13.00	[4] July 1, 1984
19–100	13.00	[4] July 1, 1984
1–100	8.00	July 1, 1989
101	24.00	July 1, 1989
102–200	11.00	July 1, 1989
201–End	13.00	July 1, 1989
42 Parts:		
1–60	16.00	Oct. 1, 1989
61–399	6.50	Oct. 1, 1989
400–429	22.00	Oct. 1, 1989
430–End	24.00	Oct. 1, 1989
43 Parts:		
1–999	19.00	Oct. 1, 1989
1000–3999	26.00	Oct. 1, 1989
4000–End	12.00	Oct. 1, 1989
44	22.00	Oct. 1, 1989
45 Parts:		
1–199	16.00	Oct. 1, 1989
200–499	12.00	Oct. 1, 1989
500–1199	24.00	Oct. 1, 1989
1200–End	18.00	Oct. 1, 1989
46 Parts:		
1–40	14.00	Oct. 1, 1989
41–69	15.00	Oct. 1, 1989
70–89	7.50	Oct. 1, 1989
90–139	12.00	Oct. 1, 1989
140–155	13.00	Oct. 1, 1989
156–165	13.00	Oct. 1, 1989
166–199	14.00	Oct. 1, 1989
200–499	20.00	Oct. 1, 1989
500–End	11.00	Oct. 1, 1989
47 Parts:		
0–19	18.00	Oct. 1, 1989
20–39	18.00	Oct. 1, 1989
40–69	9.50	Oct. 1, 1989
70–79	18.00	Oct. 1, 1989
80–End	20.00	Oct. 1, 1989
48 Chapters:		
1 (Parts 1–51)	29.00	Oct. 1, 1989
1 (Parts 52–99)	18.00	Oct. 1, 1989
2 (Parts 201–251)	19.00	Oct. 1, 1989
2 (Parts 252–299)	17.00	Oct. 1, 1989
3–6	19.00	Oct. 1, 1989
7–14	25.00	Oct. 1, 1989
15–End	27.00	Oct. 1, 1989
49 Parts:		
1–99	14.00	Oct. 1, 1989
100–177	28.00	Oct. 1, 1989
178–199	22.00	Oct. 1, 1989
200–399	20.00	Oct. 1, 1989
400–999	25.00	Oct. 1, 1989
1000–1199	18.00	Oct. 1, 1989
1200–End	19.00	Oct. 1, 1989
50 Parts:		
1–199	18.00	Oct. 1, 1989
200–599	15.00	Oct. 1, 1989
600–End	14.00	Oct. 1, 1989
CFR Index and Findings Aids	29.00	Jan. 1, 1989
Complete 1990 CFR set	620.00	1990
Microfiche CFR Edition:		
Complete set (one-time mailing)	115.00	1985
Complete set (one-time mailing)	185.00	1986
Complete set (one-time mailing)	185.00	1987
Subscription (mailed as issued)	185.00	1988
Subscription (mailed as issued)	188.00	1989
Individual copies	2.00	1990

[1] Because Title 3 is an annual compilation, this volume and all previous volumes should be retained as a permanent reference source.

[2] No amendments to this volume were promulgated during the period Jan. 1, 1987 to Dec. 31, 1989. The CFR volume issued January 1, 1987, should be retained.

[3] The July 1, 1985 edition of 32 CFR Parts 1–189 contains a note only for Parts 1–39 inclusive. For the full text of the Defense Acquisition Regulations in Parts 1–39, consult the three CFR volumes issued as of July 1, 1984, containing those parts.

[4] The July 1, 1985 edition of 41 CFR Chapters 1–100 contains a note only for Chapters 1 to 49 inclusive. For the full text of procurement regulations in Chapters 1 to 49, consult the eleven CFR volumes issued as of July 1, 1984 containing those chapters.