AUTHENTICATED U.S. GOVERNMENT INFORMATION GPO

9-24-80
Vol. 45 No. 187
Pages 63261-63478

federal register

Wednesday
September 24, 1980

Highlights

Briefings on How To Use the Federal Register—For details on the resumption of briefings in **Washington, D.C.**, see announcement in the **Reader Aids** section at the end of this issue.

63476 **Occupational Safety and Health** Labor/OSHA reopens rulemaking record for lead standard; comments by 10-27-80; hearings on 11-5, 11-6 and 11-7-80 (Part IV of this issue)

63462 **Wage and Price Controls** CWPS extends second-year price standards; effective 10-1-80; comments by 10-20-80 (Part III of this issue)

63263 **Excise Taxes** Treasury/IRS issues interim rule and proposes rule for determining base prices for tier 2 and tier 3 oil; effective with respect to oil removed after 2-29-80; comments by 11-24-80 (2 documents)

63295 **Truth in Lending** FRS proposes staff interpretation regarding security interest disclosures in closed end credit transactions; comments by 10-20-80

63410 **Treasury Notes** Treasury/Sec'y announces the interest rate on Series W—1982 will be 11⅞ percent

63326 **Football Helmets** CPSC denies petition requesting issuance of standards

CONTINUED INSIDE

FEDERAL REGISTER Published daily, Monday through Friday, (not published on Saturdays, Sundays, or on official holidays), by the Office of the Federal Register, National Archives and Records Service, General Services Administration, Washington, D.C. 20408, under the Federal Register Act (49 Stat. 500, as amended; 44 U.S.C. Ch. 15) and the regulations of the Administrative Committee of the Federal Register (1 CFR Ch. I). Distribution is made only by the Superintendent of Documents, U.S. Government Printing Office, Washington, D.C. 20402.

The **Federal Register** provides a uniform system for making available to the public regulations and legal notices issued by Federal agencies. These include Presidential proclamations and Executive Orders and Federal agency documents having general applicability and legal effect, documents required to be published by Act of Congress and other Federal agency documents of public interest. Documents are on file for public inspection in the Office of the Federal Register the day before they are published, unless earlier filing is requested by the issuing agency.

The **Federal Register** will be furnished by mail to subscribers, free of postage, for $75.00 per year, or $45.00 for six months, payable in advance. The charge for individual copies is $1.00 for each issue, or $1.00 for each group of pages as actually bound. Remit check or money order, made payable to the Superintendent of Documents, U.S. Government Printing Office, Washington, D.C. 20402.

There are no restrictions on the republication of material appearing in the **Federal Register.**

Questions and requests for specific information may be directed to the telephone numbers listed under INFORMATION AND ASSISTANCE in the READER AIDS section of this issue.

Highlights

63264 **Civil Rights** VA establishes procedures to assure nondiscrimination based on handicap in programs and activities receiving Federal financial assistance; effective 9–24–80

63432 **Residential Conservation Service Program** DOE sets up program to encourage the installation of energy conservation measures and renewable resource measures in existing houses by residential customers; effective 10–24–80 except for § 456.915 (Part II of this issue)

63310 **Environmental Protection** Commerce/EDA publishes procedures to implement National Environmental Policy Act; effective 9–24–80

63292 **Nuclear Materials** DOE proposes changes in scope and applicability of criteria for determining eligibility for access to classified matter or special nuclear material; comments by 10–24–80

63330 **Energy** DOE/ERA issues order granting exemptions from prohibitions of the Powerplant and Industrial Fuel Use Act of 1978; effective 11–24–80

63363 **Natural Resources** Interior/FWS is considering formulation of a national fish and wildlife policy that would clarify and reaffirm this country's commitment to conservation of natural resources; comments by 10–10–80

63286 **Fisheries** Commerce/NOAA issues emergency regulations applicable to fishing by vessels of the U.S. in Alaska salmon troll fishery; effective 9–21–80; comments by 11–20–80

63278 **Maritime Carriers** FMC will no longer accept tariffs containing bunker surcharges which constitute general rate increases; effective 9–30–80

63305 **Radio** FCC request public comment about rule changes governing land mobile radio services; comments by 9–9–81

63297 **Forms** Library of Congress/Copyright Office terminates inquiry regarding blank forms

63360 **Privacy Act Documents** HUD

63411 **Sunshine Act Meetings**

Separate Parts of This Issue

63432 **Part II, DOE/SOLAR**
63462 **Part III, CWPS**
63476 **Part IV, Labor/OSHA**

Contents

Federal Register
Vol. 45, No. 187
Wednesday, September 24, 1980

Agricultural Marketing Service
RULES
63261 Tomatoes grown in Fla.
PROPOSED RULES
63288 Tomatoes grown in Tex.

Agriculture Department
See Agricultural Marketing Service; Animal and Plant Health Inspection Service.

Air Force Department
NOTICES
Meetings:
63328 Scientific Advisory Board (2 documents)

Animal and Plant Health Inspection Service
RULES
Animal welfare:
63261 Marine mammals; transportation, handling, care, and treatment; standards; correction
Livestock and poultry quarantine:
63262 Exotic Newcastle disease

Antitrust Division
NOTICES
Competitive impact statements and proposed consent judgments:
63391 United Technologies Corp.

Bonneville Power Administration
NOTICES
Environmental statements; availability, etc.:
63328 Dickey-Lincoln School Lakes Transmission Project, N.H.; draft supplement

Civil Rights Commission
NOTICES
Meetings; State advisory committees:
63310 District of Columbia
63310 Michigan

Commerce Department
See also Economic Development Administration; Foreign-Trade Zones Board; International Trade Administration; National Oceanic and Atmospheric Administration.
NOTICES
Voluntary standards:
63325 Interagency Committee on Standards Policy resolution on National Policy Advisory Committee report

Commodity Futures Trading Commission
NOTICES
63411 Meetings; Sunshine Act

Conservation and Solar Energy Office
RULES
Residential conservation service program:
63432 Certification requirements for installers and inspectors of vent dampers, wind energy devices, loose fill thermal insulation, etc.

Consumer Product Safety Commission
NOTICES
63326 Football helmets; petition denied
Meetings:
63327 Product Safety Advisory Council

Copyright Office, Library of Congress
PROPOSED RULES
Claims registration:
63297 Blank forms; termination of inquiry

Customs Service
NOTICES
63410 Tuna and tuna products from Canada; removal of import prohibition; correction

Defense Department
See Air Force Department.

Economic Development Administration
NOTICES
63310 National Environmental Policy Act; implementation

Economic Regulatory Administration
NOTICES
Canadian allocation program:
63328 Crude oil, October through December
Powerplant and industrial fuel use; prohibition orders, exemption requests, etc.:
63330 General Motors Corp.
Remedial orders:
63332 Shatz Bros. Marine Center, Inc.

Energy Department
See also Bonneville Power Administration; Conservation and Solar Energy Office; Economic Regulatory Administration; Federal Energy Regulatory Commission.
RULES
63262 Privacy Act; implementation; correction
PROPOSED RULES
63292 Access to classified matter or special nuclear material; criteria and procedures for determining eligibility

Environmental Protection Agency
RULES
Air quality implementation plans; approval and promulgation; various States, etc.:
63277 Missouri
PROPOSED RULES
Air quality implementation plans; approval and promulgation; various States, etc.:
63301 Kansas
63300 Virginia
Pesticide programs:
63302 Biorational pesticides data requirements, registration guidelines; FIFRA Scientific Advisory Panel meeting

Water Pollution Control:
63302 Hazardous waste management program; Louisiana interim authorization plan, phase I; hearing
NOTICES
Air pollutants; hazardous; national emission standards:
63348 Borden Chemical; application approval
63349 Dow Chemical U.S.A.; application approval
63348 Firestone Plastics Co.; application approval
Environmental statements; availability, etc.:
63339 Agency statements; review and comment
Meetings:
63349 Science Advisory Board
Toxic and hazardous substances control:
63346 Premanufacture exemption applications
63343, 63344, 63347 Premanufacture notices receipts (3 documents)

Equal Employment Opportunity Commission
NOTICES
63411 Meetings; Sunshine Act

Federal Communications Commission
RULES
Frequency allocations and radio treaty matters:
63279 Non-Government radiolocation use; footnote US110 corrected
Radio services, special:
63280 Maritime services; Class III–B public coast stations; exemption from watch requirements
Radio stations; table of assignments
63279 Mississippi
63280 West Virginia
PROPOSED RULES
Radio services, special:
63305 Land mobile services; radio spectrum use; additional technologies for improved efficiency; inquiry
Radio stations; table of assignments:
63302 Michigan
63304 Minnesota
63304 Texas; extension of time
NOTICES
Hearings, etc.:
63349 Cajun Communications, Inc., et al.
63350 Mighty-Mac Broadcasting Co. et al.
63351 Murray State Univerisity et al.
63352 Ralin Broadcasting Corp. et al.
63350 Slab Fork Broadcasting Co. et al.
63352 Tacoma School District No. 10 et al.
63353 TV–8, Inc., et al.
63354 Rulemaking proceedings filed, granted, denied, etc.; petitions by various companies
63354 Television broadcast applications accepted for filing and notification of cut-off date

Federal Energy Regulatory Commission
PROPOSED RULES
Electric utilities:
63296 Annual reports (Form No. 1, class A and B); elimination of unnecessary data requirements; extension of time
NOTICES
Hearings, etc.:
63332 Cities Service Gas Co.
63333 Colorado Interstate Gas Co.
63333 Eagle's Chevron Service
63333 Florida Power Corp.
63333 Harrison Western Corp.
63334 Kings River Conservation District
63335 Lone Star Gas Co. (2 documents)
63335 Massachusetts Municipal Wholesale Electric Co. et al.
63336 McCulloch Interstate Gas Corp.
63337 Michigan Wisconsin Pipe Line Co.
63338 Southern California Edison Co.
63338 Transcontinental Gas Pipe Line Corp.
63411 Meetings; Sunshine Act

Federal Maritime Commission
RULES
Practice and procedure:
63278 Bunker surcharges in domestic offshore trades
NOTICES
63355 Agreements filed, etc.
Freight forwarder licenses:
63355 Daniel F. Young, Inc.
63355 Temple Forwarding Co. et al.

Federal Reserve System
PROPOSED RULES
Truth in lending (Regulation Z):
63295 Security interest disclosures, closed end credit transactions; official staff interpretation
NOTICES
Applications, etc.:
63357 Lakeside Credit Co., Inc.
63356 Maryland National Corp. et al.
63357 Plaza Management Co.
63358 Security Bancorp, Inc.
63358 Tennessee Homestead Co.

Federal Trade Commission
NOTICES
Premerger notification waiting periods; early terminations:
63358 L'Air Liquide, S.A.

Fish and Wildlife Service
NOTICES
63363 Migratory bird hunting and conservation stamps; sale of
63363 National fish and wildlife policy; draft availability

Foreign-Trade Zones Board
NOTICES
Applications, etc.:
63323 North Carolina

Health, Education, and Welfare Department
See Health and Human Services Department.

Health and Human Services Department
See also Human Development Services Office.
NOTICES
Organization, functions, and authority delegations:
63359 Assistant Secretary, Health, et al.; hospital-affiliated primary care centers
63360 Assistant Secretary, Health; medical care facilities and resources

Housing and Urban Development Department
NOTICES
Authority delegations:
63360 General Manager, New Community Development Corporation; management and disposition of surplus Federal real property

63360 Privacy Act; systems of records

Human Development Services Office
NOTICES
Meetings:
63358, 63359 White House Conference on Aging Technical Committee (4 documents)

Indian Affairs Bureau
NOTICES
Environmental statements; availability, etc.:
63361 Ute Mountain Ute Indian Reservation, San Juan County, Colo.; proposed coal strip mine; hearing

Interior Department
See also Fish and Wildlife Service; Indian Affairs Bureau; Land Management Bureau; Surface Mining Office.

Internal Revenue Service
RULES
Excise taxes:
63263 Crude oil windfall profit tax; tiers 2 and 3 oil base prices; temporary
PROPOSED RULES
Excise taxes:
63297 Crude oil windfall profit tax; tiers 2 and 3 oil base prices; temporary; cross reference
63296 Tax-free sales of articles to be used for, or resold for, further manufacture; hearing
Income taxes:
63296 Withholding tax; Virgin Island inhabitants; exemption clarification; hearing

International Trade Administration
NOTICES
Meetings:
63324 Computer Peripherals, Components and Related Test Equipment Technical Advisory Committee

International Trade Commission
NOTICES
Import investigations:
63387 Anhydrous sodium metasilicate from France
63388 Barium carbonate and strontium carbonate from Germany, and strontium nitrate from Italy
63389 Calcium pantothenate from Japan
63389 Inclined-field acceleration tubes and components
63390 Montan wax from East Germany
63390 Portable electric nibblers from Switzerland
63411 Meetings: Sunshine Act

Interstate Commerce Commission
RULES
Railroad car service orders; various companies:
63283 Chicago, Rock Island & Pacific Railroad Co.; track use by various railroads
63283 Louisville & Nashville Railroad Co.
NOTICES
Motor carriers:
63364, 63366 Finance applications (2 documents)
63369, 63370, 63372 Permanent authority applications (3 documents)
63379 Temporary authority applications
Railroad services abandonment:
63386 Burlington Northern Inc. (2 documents)
63386, 63387 Chicago & North Western Transportation Co. (2 documents)

Justice Department
See also Antitrust Division.
NOTICES
Pollution control; consent judgments:
63398 AMAX Nickel Refining Co., Inc.
63398 Prisons Bureau institutions; list addition

Labor Department
See Occupational Safety and Health Administration.

Land Management Bureau
NOTICES
Applications, etc.:
63362 Wyoming
Environmental statements; availability, etc.:
63362 Mountain Valley Planning Area, rangeland management program, Utah

Minimum Wage Study Commission
NOTICES
63398 Meetings

National Labor Relations Board
NOTICES
63411 Meetings; Sunshine Act

National Mediation Board
NOTICES
63411 Meetings; Sunshine Act

National Oceanic and Atmospheric Administration
RULES
Fishery conservation and management:
63286 Salmon, high seas; emergency regulations
63287 Salmon fisheries, commercial and recreational, off Wash., Oreg., and Calif.; correction
PROPOSED RULES
Marine mammals:
63309 Sea turtles in Southeastern U.S. waters; mortality reduction; scoping meeting

National Science Foundation
NOTICES
Meetings:
63399 Advisory Council
63400 Behavioral and Neural Sciences Advisory Committee
63400 DOE/NSF Nuclear Science Advisory Committee
63398, 63399, 63400 Materials Research Advisory Committee (3 documents)
63399 Policy Research and Analysis and Science Resources Studies Advisory Committee
63400, 63401 Social and Economic Science Advisory Committee (4 documents)
63399 Special Research Equipment Advisory Committee

Nuclear Regulatory Commission
NOTICES
63412 Meetings; Sunshine Act

Occupational Safety and Health Administration
PROPOSED RULES
Health and safety standards:
63476 Occupational lead exposure standards; limited reopening of rulemaking record; extension of time and public hearing

Occupational Safety and Health Review Commission
NOTICES
63412 Meetings; Sunshine Act (3 documents)

Securities and Exchange Commission
NOTICES
Hearings, etc.:
63403 Arkansas Power & Light Co.
63403 General Public Utilities Corp. et al.
63404 Kemper Investors Life Insurance Co. et al.
63407 Midwest Income Investment Co.
63409 Pacific Scientific Co.

State Department
NOTICES
Meetings:
63409 International Investment, Technology, and Development Advisory Committee

Surface Mining Office
NOTICES
Coal mining and reclamation plans:
63363 Carter Mining Co.

Tennessee Valley Authority
NOTICES
Public Utilities Regulatory Policies Act of 1978:
63410 Ratemaking standards; proposed determinations; extension of time and hearing rescheduled

Trade Representative, Office of United States
NOTICES
63402 International trade agreements (Tokyo Round); determinations
Meetings:
63402 Services Policy Advisory Committee
63402 Trade Negotiations Advisory Committee

Treasury Department
See also Customs Service; Internal Revenue Service.
NOTICES
Notes, Treasury:
63410 W-1982 series

Veterans Administration
RULES
Nondiscrimination:
63264 Handicapped in federally assisted programs

Wage and Price Stability Council
RULES
63462 Price standards; interim final

MEETINGS ANNOUNCED IN THIS ISSUE

CIVIL RIGHTS COMMITTEE
63310 District of Columbia Advisory Committee, 10-9-80
63310 Michigan Advisory Committee, 10-7-80

COMMERCE DEPARTMENT
International Trade Administration—
63324 Computer Peripherals, Components and Related Test Equipment Technical Advisory Committee, 10-9-80
National Oceanic and Atmospheric Administration—
63309 Regulations to reduce sea turtle mortality in Southern U.S. waters, 10-2 and 10-16-80

CONSUMER PRODUCT SAFETY COMMISSION
63327 Meeting, 10-9 and 10-10-80

DEFENSE DEPARTMENT
Air Force Department—
63328 USAF Scientific Advisory Board, Electronic Systems Division Group, 10-17 and 10-18-80
63328 USAF Scientific Advisory Board, Space Division Advisory Group, 10-30 and 10-31-80

ENVIRONMENTAL PROTECTION AGENCY
63302 Federal Insecticide, Fungicide, and Rodenticide Act (FIFRA) Scientific Advisory Panel, 10-7 through 10-9-80
63349 Science Advisory Board, 10-2 and 10-3-80

HEALTH AND HUMAN SERVICES DEPARTMENT
Human Development Services Office—
63358 White House Conference on Aging, Family, Social Services and Other Support Systems Technical Committee, 9-28 and 9-29-80
63359 White House Conference on Aging, Health Promotion Technical Committee, 10-6 and 10-7-80
63359 White House Conference on Aging, Long Term Technical Committee, 9-29 and 9-30-80
63359 White House Conference on Aging, Research on Aging Technical Committee, 9-29-80

MINIMUM WAGE STUDY COMMISSION
63398 Meeting, 10-8-80

NATIONAL SCIENCE FOUNDATION
63400 Behavioral and Neural Sciences Advisory Committee, Anthropology Subcommittee, 11-12 through 11-14-80
63400 DOE/NSF Nuclear Science Advisory Committee, 11-6-80
63400 Materials Research Advisory Committee Condensed Matter Sciences Subcommittee, 10-27 and 10-28-80
63398 Materials Research Advisory Committee, Oversight of Materials Research Laboratories Program Ad Hoc Subcommittee, 10-29 and 10-30-80
63399 Materials Research Laboratories Advisory Subcommittee, 10-30 and 10-31-80
63399 NSF Advisory Council, 11-6 and 11-7-80
63399 Policy Research and Analysis and Science Resources Studies Advisory Committee, 10-23 and 10-24-80

63401 Science Advisory Committee for Social and Economic Science, History and Philosophy Subcommittee, 11–6, 11–7 and 11–8–80
63401 Social and Economic Science Advisory Committee, Geography and Regional Science Subcommittee, 10–27–80
63400 Social and Economic Science Advisory Committee, Measurement Methods and Data Resources Subcommittee, 11–14 and 11–15–80
63401 Social and Economic Science Advisory Committee, Political Science Subcommittee, 10–27 and 10–28–80
63399 Special Research Equipment Advisory Committee, Biology Subcommittee, 11–3 and 11–4–80

OFFICE OF THE UNITED STATES TRADE REPRESENTATIVE
63402 Services Policy Advisory Committee, 10–6–80
63402 Trade Negotiations Advisory Committee, 10–8–80

STATE DEPARTMENT
63409 International Investment, Technology, and Development Advisory Committee Working Group on Preparations for the U.N. Conference on New and Renewable Sources of Energy, 10–14–80

RESCHEDULED MEETINGS

TENNESSEE VALLEY AUTHORITY
63410 Ratemaking standards, rescheduled from 9–30 to 11–10–80

HEARINGS

ENVIRONMENTAL PROTECTION AGENCY
63302 Louisiana: Submission for approval of interim authorization plan Phase I, Hazardous Waste Management Program, 10–23–80

LABOR DEPARTMENT
Occupational Safety and Health Administration—
63476 Reopening of record for exposure to lead standard, 11–5, 11–6 and 11–7–80

TREASURY DEPARTMENT
Internal Revenue Service—
63296 Tax-free sales of articles to be used for, or resold for, further manufacture, 10–28–80
63296 Withholding of tax under Chapter 3 of the Internal Revenue Code of 1954 with respect to Virgin Islands inhabitants, 11–7–80

CFR PARTS AFFECTED IN THIS ISSUE

A cumulative list of the parts affected this month can be found in the Reader Aids section at the end of this issue.

6 CFR
705 63462

7 CFR
966 63261
Proposed Rules:
965 63288

9 CFR
3 63261
82 63262

10 CFR
206 63262
456 63432
708 63262
Proposed Rules:
710 63292

12 CFR
Proposed Rules:
226 63295

18 CFR
Proposed Rules:
141 63296

26 CFR
150 63263
Proposed Rules:
1 63296
48 63296
51 63297

29 CFR
Proposed Rules:
1910 63476

37 CFR
Proposed Rules:
202 63297

38 CFR
18 63264

40 CFR
52 63277
Proposed Rules:
52 (2 documents) 63300, 63301
123 63302
162 63302
163 63302

46 CFR
502 63278
512 63278
531 63278

47 CFR
2 63279
73 (2 documents) 63279, 63280
81 63280
Proposed Rules:
73 (3 documents) 63302, 63304
90 63305

49 CFR
1033 (2 documents) 63283

50 CFR
661 63287
674 63286
Proposed Rules:
222 63309
225 63309
226 63309
227 63309

Rules and Regulations

Federal Register
Vol. 45, No. 187
Wednesday, September 24, 1980

This section of the FEDERAL REGISTER contains regulatory documents having general applicability and legal effect, most of which are keyed to and codified in the Code of Federal Regulations, which is published under 50 titles pursuant to 44 U.S.C. 1510.
The Code of Federal Regulations is sold by the Superintendent of Documents. Prices of new books are listed in the first FEDERAL REGISTER issue of each month.

DEPARTMENT OF AGRICULTURE

Agricultural Marketing Service

7 CFR Part 966

Tomatoes Grown in Florida; Expenses and Rate of Assessment

AGENCY: Agricultural Marketing Service, USDA.

ACTION: Final rule.

SUMMARY: This regulation authorizes expenses for the functioning of the Florida Tomato Committee. It enables the committee to collect assessments from first handlers on all assessable tomatoes handled and to use the resulting funds for its expenses.

EFFECTIVE DATE: August 1, 1980.

FOR FURTHER INFORMATION CONTACT: Charles W. Porter, Chief, Vegetable Branch, F&V, AMS, USDA, Washington, D.C. 20250 (202) 447-2615. The Final Impact Statement relative to this final rule is available upon request from Mr. Porter.

SUPPLEMENTARY INFORMATION: Findings. This final action has been reviewed under USDA Procedures established in Secretary's Memorandum 1955 to implement Executive Order 12044, and has been classified "not significant."

Pursuant to Marketing Order No. 966, as amended (7 CFR Part 966), regulating the handling of tomatoes grown in Florida, effective under the Agricultural Marketing Agreement Act of 1937, as amended (7 U.S.C. 601-674), and upon other information, it is found that the expenses and rate of assessment which follows will tend to effectuate the declared policy of the act.

It is further found that it is impracticable and contrary to the public interest to provide 60 days for interested persons to file comments or to engage in public rulemaking, and that good cause exists for not postponing the effective date of this section until 30 days after publication in the **Federal Register** (5 U.S.C. 553), as the order requires that the rate of assessment for a particular fiscal period shall apply to all assessable tomatoes handled from the beginning of such period. Handlers and other interested persons were given an opportunity to submit information and views on the expenses and assessment rate at an open meeting of the committee held September 5, 1980, in Sarasota, Florida. To efffectuate the declared purposes of the act it is necessary to make these provisions effective as specified.

Section 966.216 is hereby terminated and § 966.217 is added as follows:

§ 966.217 Expenses and rate of assessment.

(a) The reasonable expenses that are likely to be incurred during the fiscal period ending July 31, 1981, by the Florida Tomato Committee for its maintenance and functioning and for such other purposes as the Secretary may determine to be appropriate amount to $152,700.

(b) The rate of assessment to be paid by each handler in accordance with this part shall be one-half cent ($0.005) per 30-pound container or equivalent quantity of tomatoes handled by him as the first handler thereof during the fiscal period.

(c) Unexpended income in excess of expenses for the fiscal period may be carried over as a reserve to the extent authorized in § 966.44(a)(2).

(d) Terms used in this section have the same meaning as when used in the marketing agreement and this part.

(Secs. 1-19, 48 Stat. 31, as amended; 7 U.S.C. 601-674)

Dated: September 19, 1980.

D. S. Kuryloski,

Deputy Director, Fruit and Vegetable Division, Agricultural Marketing Service.

[FR Doc. 80-29605 Filed 9-23-80; 8:45 am]
BILLING CODE 3410-02-M

Animal and Plant Health Inspection Service

9 CFR Part 3

Animal Welfare; Miscellaneous Amendments and Correction

AGENCY: Animal and Plant Health Inspection Service, USDA.

ACTION: Final rule, correction.

SUMMARY: The purpose of this amendment is to correct §§ 3.104(b)(3)(iii) and 3.104(f)(3) of Subpart E of Part 3 of Chapter 9 of the Code of Federal Regulations pertaining to marine mammals.

EFFECTIVE DATE: September 24, 1980.

FOR FURTHER INFORMATION CONTACT: Dr. D. F. Schwindaman, Animal Care Staff, USDA, APHIS, VS, Federal Building, Room 703, Hyattsville, MD 20782, (301) 436-7833.

SUPPLEMENTARY INFORMATION: On August 19, 1977, and September 19, 1978, proposed regulations were published in the **Federal Register** for the Humane Handling, Care, Treatment, and Transportation of Marine Mammals (42 FR 42044-42054) (43 FR 42200-42218). On June 22, 1979, final regulations were published which became effective September 20, 1979, (44 FR 36868-36883). Due to revisions made in the final regulations and a proof reading oversight, two inaccurate section references appear in § 3.104(b)(3)(iii) and the words "the square of" were omitted in line 13, § 3.104(f)(3), between the words "one-half of" and "the sea otters average adult length by 3.14."

In order to correct these errors, § 3.104(b)(3)(iii) and (f)(3) are amended to read as follows:

§ 3.104 [Amended]

(b) * * *

(3) * * *

(iii) When a mixture of both Group I and Group II cetaceans are housed together, the MHD must be satisfied as stated in § 3.104(b)(1), and the minimum depth must be satisfied as stated in § 3.104(b)(2). . . .

* * * * *

(f) * * *

(3) * * * When the enclosure is to contain more than two sea otters, the dry resting area for each additional

animal shall be computed by multiplying one-half of the square of the sea otter's average adult length by 3.14 * * *.

Done at Washington, D.C., this 19th day of September 1980.

Pierre A. Chaloux,

Deputy Administrator, Veterinary Services.

[FR Doc. 80-29609 Filed 9-23-80; 8:45 am]

BILLING CODE 3410-34-M

---

9 CFR Part 82

Exotic Newcastle Disease; and Psittacosis or Ornithosis in Poultry; Areas Quarantined

AGENCY: Animal and Plant Health Inspection Service, USDA.

ACTION: Final rule.

SUMMARY: The purpose of these amendments is to quarantine a portion of Broward County and a portion of Dade County in Florida and a portion of Los Angeles County in California because of the existence of exotic Newcastle disease. Exotic Newcastle disease was confirmed in such portion of Broward County, Florida, on September 11, 1980; Dade County, Florida, on September 12, 1980; and Los Angeles County, California, on September 13, 1980. Therefore, in order to prevent the dissemination of exotic Newcastle disease it is necessary to quarantine the affected areas.

EFFECTIVE DATE: September 15, 1980.

FOR FURTHER INFORMATION CONTACT: C. G. Mason, Chief, National Emergency Field Operations, Emergency Programs, Veterinary Services, USDA, 2505 Belcrest Road, Federal Building, Room 751, Hyattsville, MD 20782, 301-436-8073.

SUPPLEMENTARY INFORMATION: These amendments quarantine a portion of Broward County and a portion of Dade County in Florida and a portion of Los Angeles County in California, because of the existence of exotic Newcastle disease. Therefore, the restrictions pertaining to the interstate movement of poultry, mynah, and psittacine birds, and birds of all other species under any form of confinement, and their carcasses, and parts thereof, and certain other articles, from quarantined areas, as contained in 9 CFR Part 82, as amended, will apply to the quarantined areas.

Accordingly, Part 82, Title 9, Code of Federal Regulations, is hereby amended in the following respects:

1. In § 82.3(a)(1) relating to the State of Florida, new paragraphs (ii) and (iii) relating to Broward County and Dade County are added to read:

§ 82.3 Areas quarantined.

(a) * * *

(1) *Florida.*

* * * * *

(ii) The premises of Bill's Bird Boutique, 4122 SW 64th Avenue, Davie, Broward County.

(iii) The premises of South Florida Bird Farm, 4444 SW 74th Avenue, Miami, Dade County.

2. In § 82.3, the introductory portion of paragraph (a) is amended by adding thereto the name of the State of California and a new paragraph (a)(2) relating to the State of California is added to read:

(a) * * *

* * * * *

(2) *California.* The premises of David Mohilef, 4105 Jefferson Blvd., Los Angeles, Los Angeles County.

(Secs. 4-7, 23 Stat. 32, as amended; secs. 1 and 2, 32 Stat. 791-792, as amended; secs. 1-4, 33 Stat. 1264, 1265, as amended; secs. 3 and 11, 76 Stat. 130, 132 (21 U.S.C. 111-113, 115, 117, 120, 123-126, 134b, 134f); 37 FR 28464, 28477; 38 FR 19141)

These amendments impose certain restrictions necessary to prevent the interstate spread of exotic Newcastle disease, a communicable disease of poultry, and must be made effective immediately to accomplish its purpose in the public interest. It does not appear that public participation in this rulemaking proceeding would make additional relevant information available to the Department.

Therefore, pursuant to the administrative procedure provisions in 5 U.S.C. 553, it is found upon good cause that notice and other public procedure with respect to this final rule are impracticable and contrary to the public interest and good cause is found for making this final rule effective less than 30 days after publication of this document in the **Federal Register.**

Further, this final rule has not been designated as "significant," and is being published in accordance with the emergency procedures in Executive Order 12044 and Secretary's Memorandum 1955. It has been determined by J. C. Jefferies, Acting Assistant Deputy Administrator, Animal Health Programs, APHIS, VS, USDA, that the emergency nature of this final rule warrants publication without opportunity for prior public comment or preparation of an impact analysis statement at this time.

This final rule implements the regulations in Part 82. It will be scheduled for review in conjunction with the periodic review of the regulations in that Part required under the provisions of Executive Order 12044 and Secretary's Memorandum 1955.

Done at Washington, D.C., this 15th day of September 1980.

J. K. Atwell,

Acting Deputy Administrator, Veterinary Services.

[FR Doc. 80-29608 Filed 9-23-80; 8:45 am]

BILLING CODE 3410-34-M

DEPARTMENT OF ENERGY

10 CFR Parts 206 and 708

Privacy Act; Records Maintained on Individuals; Correction

AGENCY: Department of Energy.

ACTION: Amendment to final rule.

SUMMARY: In the **Federal Register** (45 FR 61576) published September 16, 1980, 10 CFR Part 206 and 10 CFR Part 708 were inadvertently omitted from the heading and in the words of issuance.

EFFECTIVE DATE: October 16, 1980.

FOR FURTHER INFORMATION CONTACT:

Milton Jordan, Director, Office of Freedom of Information and Privacy Acts Activities, Office of Administration, Department of Energy, Room 5B-138, Forrestal Building, Washington, DC 20585, (202) 252-5955.

Leslie Borden Greenspan, Office of General Counsel, Room 6A-067, Forrestal Building, Washington, DC 20585, (202) 252-8618.

SUPPLEMENTARY INFORMATION: The words of issuance are amended to read as indicated below:

"Title 10 of the Code of Federal Regulations is amended as follows:

1. Parts 206 and 708 are revoked.

2. Part 1008 is added to read as set forth below:"

Issued in Washington, DC., on September 23, 1980.

Milton Jordan,

Director, Division of FOI and Privacy Acts Activities.

[FR Doc. 80-29476 Filed 9-23-80; 8:45 am]

BILLING CODE 6450-01-M

DEPARTMENT OF THE TREASURY

Internal Revenue Service

26 CFR Part 150

[T.D. 7720]

Temporary Excise Tax Regulations Under the Crude Oil Windfall Profit Tax Act of 1980; Interim Rule for Determining Base Prices for Tier 2 and Tier 3 Oil

AGENCY: Internal Revenue Service, Treasury.

ACTION: Temporary regulations.

SUMMARY: This document provides temporary excise tax regulations relating to the windfall profit tax on domestic crude oil imposed by title I of the Crude Oil Windfall Profit Tax Act of 1980. The temporary regulations provide rules to be followed by producers and purchasers of domestic crude oil. In addition, the text contained in the temporary regulations set forth in this document serves as the text of the proposed regulations cross-referenced in the notice of proposed rulemaking in the Proposed Rules section of this issue of the **Federal Register.**

DATES: These temporary regulations are effective with respect to oil removed after February 29, 1980.

FOR FURTHER INFORMATION CONTACT: David B. Cubeta of the Legislation and Regulations Division, Office of the Chief Counsel, Internal Revenue Service, 1111 Constitution Avenue NW., Washington, DC 20224 (Attention: CC:LR:T) (202–566–3297).

SUPPLEMENTARY INFORMATION:

Background

On April 4, 1980, the **Federal Register** published temporary regulations (45 FR 23384) under sections 4986, 4987, 4988, 4989, 4991, 4992, 4993, 4994, 4995, 4996, 4997, 6050C, 6076, and 6402 of the Internal Revenue Code of 1954. The temporary regulations were required to implement various sections of the Crude Oil Windfall Profit Tax Act of 1980. This document contains an amendment to § 150.4989–1(c)(2) of those temporary regulations (relating to the interim rule for determining tier 2 and tier 3 base prices).

The regulations promulgated in this document are also proposed to be prescribed as final Excise Tax Regulations (26 CFR Part 51).

Explanation of provisions

Numerous commentators on the proposed windfall profit tax regulations published on April 4, 1980 requested that further guidance be provided as to what constitutes a valid posted price for purposes of the interim base price rule for tier 2 and tier 3 oil. Several commentators suggested that the concepts contained in FEA Ruling 1977–1, which sets forth the criteria for a valid posted price in determining ceiling prices, be adopted for the purpose of determining which prices should be used in computing the interim base prices for tier 2 and tier 3 oil. That suggestion has been accepted, and these regulations adopt the principles contained in FEA Ruling 1977–1 with the modifications necessary to conform those rules to the windfall profit tax.

Because these regulations are effective with respect to oil removed after February 29, 1980, purchasers will be required to make withholding adjustments if it is determined that an improper base price has been used in computing windfall profit tax withholding.

Waiver of Procedural Requirements of Treasury Directive

The expeditious adoption of the provisions contained in this document is necessary because of the need for immediate guidance to taxpayers liable for the windfall profit tax on domestic crude oil and to other persons required to withhold and deposit tax, file returns, provide information, etc. For this reason, Jerome Kurtz, Commissioner of Internal Revenue, has determined that the provisions of paragraphs 8 through 14 of the Treasury Department directive implementing Executive Order 12044 must be waived.

Drafting Information

The principal author of these regulations is David B. Cubeta of the Legislation and Regulations Division of the Office of Chief Counsel, Internal Revenue Service. However, personnel from other offices of the Internal Revenue Service and Treasury Department participated in developing the regulations, both on matters of substance and style.

Adoption of Amendments to the Regulations

Accordingly, part 150, Temporary Excise Tax Regulations under the Crude Oil Windfall Profit Tax Act of 1980, is amended as follows:

Paragraph 1. Paragraph (c) of § 150.4989–1 is amended by revising the flush language following subparagraph (2)(ii)(B). Amended paragraph (c) reads as follows:

§ 150.4989–1 Adjusted base price.

* * * * *

(c) *Base prices for tier 2 and tier 3 oil*—(1) *General rule.* [Reserved]

(2) *Interim rule.* This subparagraph and subparagraph (3) apply to oil removed during a month beginning before October 1980 (or such earlier date as may be provided in regulations taking effect before such earlier date). Except as provided in subparagraph (3), the base prices for tier 2 oil and tier 3 oil, respectively, shall be the product of—

(i)(A) The highest posted price for December 31, 1979, for uncontrolled crude oil of the same grade, quality, and field, or

(B) If there is no posted price described in inferior subdivision (A), the highest posted price for such date for uncontrolled crude oil at the nearest domestic field for which prices for oil of the same grade and quality were posted for such date, multiplied by

(ii) A fraction the denominator of which is $35, and the numerator of which is—

(A) $15.20 for purposes of determining base prices of tier 2 oil, and

(B) $16.55 for purposes of determining base prices of tier 3 oil.

In determining the base price for tier 2 or tier 3 oil, the grade and quality of the oil produced in December 1979 shall be used. For purposes of determining the highest posted price for December 31, 1979, "posted price" means a written statement of crude oil prices constituting an offer to purchase oil at that price circulated publicly among sellers and buyers of crude oil in a particular field in accordance with historic practices. Although the formality of a printed price bulletin such as is published by major purchasers is not necessary for a price to be a valid posted price, the formality of a publicly circulated written offer is necessary. The requirement that the offer be in writing and publicly circulated eliminates oral offers and offers made only to specified producers. Accordingly, other than the published price bulletins of the type traditionally issued by major oil companies, written offers to purchase constitute a "posted price" only if they are bona fide public offers of general applicability to crude oil producers in the field. For example, a letter from a purchaser to all crude oil producers in a field or in an area would constitute a posted price if the letter was a bona fide offer to purchase from all producers in that field or area. A written contract, of course, would not qualify as a posted price because it represents an agreement between a buyer and specific producer, not a bona fide offer to purchase from all producers.

Accordingly, in determining the "highest posted price," a producer should first determine which offers qualify as posted prices for December 31, 1979. Because a posted price must constitute an offer to purchase, an offer does not constitute a posted price for December 31, 1979

unless the offer was initially made on or before December 31, 1979, and was in effect for oil purchased on that date. However, in determining the highest posted price for December 31, 1979, a valid posted price that was adjusted in a subsequent posted price circulated on or before January 14, 1980 shall be considered to be an offer made at the price as adjusted so long as the adjusted price applies to all oil purchased pursuant to the initial offer. In determining which posted prices were applicable to a particular field on December 31, 1979, the term "field" means a general area underlain by one or more reservoirs. Historical field designations commonly used by regulatory agencies and the oil industry will generally be used in the determination of a given field. Price bulletins which specify only a geographical area and crude oil grade (*e.g.*, "West Texas Sour") are presumed to be applicable to every field within the named area, unless a particular field is specifically excluded. However, the existence of a price bulletin stating a higher price for specifically named fields within the same area supersedes the area-wide price bulletin for the named field only. Finally, posted prices do not include either offers to buy at a price not specified in a sum certain (*e.g.*, a price "determined by the purchaser to be competitive") or premiums above posted prices which may have been paid for crude oil purchased on December 31, 1979.

(3) *Minimum interim base price.* The base price determined under paragraph (c)(2) of this section for tier 2 oil or tier 3 oil shall not be less than the sum of—

(i) The ceiling price which would have applied to such oil under the March 1979 energy regulations if it had been produced and sold in May 1979 as upper tier oil, plus

(ii) (A) $1 in the case of tier 2 oil, or

(B) $2 in the case of tier 3 oil. For purposes of this determination, the grade and quality of the oil produced from the property in May 1979 shall be used.

* * * * *

There is need for the immediate guidance provided by the provisions contained in this Treasury decision. For this reason, it is found impracticable to issue this Treasury decision with notice and public procedure under subsection (b) of section 553 of title 5 of the United States Code or subject to the effective date limitation of subsection (d) of that section.

(Secs. 4997 and 7805 of title 26 of the United States Code)

Jerome Kurtz,

Commissioner of Internal Revenue.

Approved: September 17, 1980.

Donald C. Lubick,

Assistant Secretary of the Treasury.

[FR Doc. 80-29588 Filed 9-19-80; 4:34 pm]

BILLING CODE 4830-01-M

VETERANS ADMINISTRATION

38 CFR Part 18

Nondiscrimination on the Basis of Handicap in Programs and Activities Receiving or Benefiting From Federal Financial Assistance

AGENCY: Veterans Administration.

ACTION: Final regulations.

SUMMARY: This regulation establishes procedures and policies to assure nondiscrimination based on handicap in programs and activities receiving Federal financial assistance from the VA (Veterans Administration). The part is designed to comply with section 504 of the Rehabilitation Act of 1973, as amended, 29 U.S.C. 794, and Executive Order 11914, which relate to nondiscrimination against handicapped persons in programs receiving Federal financial assistance.

EFFECTIVE DATE: September 24, 1980.

FOR FURTHER INFORMATION CONTACT: Miss Marion M. Slachta (091S), Equal Opportunity Specialist, Office of Human Goals, Telephone Number 202-389-2943.

SUPPLEMENTARY INFORMATION:

Background

Section 504 of the Rehabilitation Act of 1973, as amended, prohibits discrimination on the basis of handicap by recipients of Federal Assistance. Pursuant to Executive Order 11914 (April 28, 1976) HEW (Department of Health, Education and Welfare) was given the responsibility to coordinate the implementation of section 504 among all Federal agencies and departments that dispense Federal assistance. On January 13, 1978, HEW issued regulations that defined generally the types of practices forbidden by the Rehabilitation Act and spelled out the responsibilities of Federal agencies to implement and enforce section 504. *See* 45 CFR 85.1-85.58. Subsequently, the VA proposed regulations which are similar to those issued by HEW (45 CFR Part 84) for its programs with changes made to meet specific VA organizational, procedural, and program requirements. There are only minor substantive deviations between the VA regulations and those of HEW's successor agencies, the Department of Education and the Department of Health and Human Services.

Overview of Regulation

The regulation is divided into seven subparts. Sections 18.401-18.410 (General Provisions) define the important terms that are used throughout the regulation and states in general terms the discriminatory acts that are prohibited. They also set forth what the Administrator believes is a simple, workable system of administration: assurances of compliance, self-evaluation by recipients, establishment of grievance procedures, and notification of employees and beneficiaries of the recipient's policy of nondiscrimination on the basis of handicap. The regulation covers all types of physical and mental impairments, including drug addiction and alcoholism.

Sections 18.411-18.14, dealing with employment practices, bar discrimination by recipients of VA assistance in recruitment, hiring, compensation, job assignment and classification, and fringe benefits. They also require employers to make reasonable accommodation to qualified handicapped applicants or employees unless it can be demonstrated that the accommodation would impose an undue hardship on the employer.

Sections 18.421-18.423 set forth the central requirement of the regulation—program accessibility. All new facilities are required to be constructed so as to be readily accessible to and usable by handicapped persons. Every existing facility need not be made physically accessible, but all recipients must ensure that programs conducted in those facilities are made accessible. While flexibility is allowed in choosing methods that in fact make programs in existing facilities accessible, structural changes in such facilities must be undertaken if no other means of assuring program accessibility is available.

Sections 18.401-18.423 of the regulation, as well as § 18.61—which incorporates by reference the VA's procedures under Title VI of the Civil Rights Act of 1964—apply to all recipients of financial assistance from the VA. The remaining subparts of the regulation contain more specific requirements applicable to three major classes of recipients.

Sections 18.431-18.439 concerned with preschool, elementary, and secondary education. They require, basically, that recipients operating public education

programs provide a free appropriate education to each qualified handicapped child in the most normal setting appropriate. The regulation also sets forth evaluation requirements designed to ensure the proper classification and placement of handicapped children, and due process procedures for resolving disputes over placement of students.

Sections 18.441–18.447 deal with postsecondary education. They proscribe discrimination against handicapped persons in recruitment, admission, and treatment after admission. Colleges and universities are required to make reasonable adjustments to permit handicapped persons to fulfill academic requirements, and to ensure that they are not effectively excluded from programs because of the absence of auxiliary aids.

Finally, §§ 18.451–18.454 deal with health and other social service programs. They forbid discrimination in providing such services and requires larger recipients to provide auxiliary aids to handicapped individuals where necessary. Specific provisions require hospitals not to discriminate against addicts or alcoholics who need medical services and to establish emergency room procedures for communication with persons with impaired hearing.

On November 6, 1978, the Congress amended section 504 to include "any program or activity conducted by any Executive agency or by the United States Postal Service," and to require those agencies to "promulgate such regulations as may be necessary to carry out the amendments to this section made by the Rehabilitation Comprehensive Services, and Developmental Disabilities Act of 1978." This regulation is not designed to implement that amendment. These regulations, as they now appear, have been approved by HEW pursuant to Executive Order 11914 and by the Equal Employment Opportunity Commission pursuant to Executive Order 12067.

The detailed HEW analysis and application of its regulation's subparts are set forth in Appendix A to 45 CFR Part 84 (1979). Due to the existence of the HEW regulations and accompanying explanation, there is no need to additionally set forth our analysis of the regulations which would not differ from that offered by HEW.

Impact of Recent Court Decisions

This part requires that employers make reasonable accommodation to the handicaps of qualified handicapped applicants or employees, and that programs be readily accessible to and usuable by the qualified handicapped. These requirements must be read in the light of *Southeastern Community College* v. *Davis*, 442 U.S. 397 (1979) where the Supreme Court first considered the reach of section 504 of the Rehabilitation Act.

Davis held that section 504 did not require the petitioner college to make fundamental alterations to its registered nurses' training program in order to accommodate the severe hearing loss of respondent who had applied for admission to the program as a student. The Court held that the respondent failed to meet the legitimate and necessary physical requirements of the program, established by petitioner, and hence, was not qualified to participate in the program. The Court noted that the section 504 regulations of the Department of Health, Education and Welfare (45 CFR 84.3(k)(3) (1978)) reinforced the Court's conclusion that the respondent was not qualified to be a student in petitioner's training program. *Id.* at 406. Section 84.3(k)(3) of Title 45 provides that, as to postsecondary and vocational services, a "qualified handicapped person" means "a handicapped person who meets the academic and technical standards requisite to admission or participation in the recipients's educational program or activity." An explanatory note to the HEW regulations defines "technical standards" as "all nonacademic admissions criteria * * * essential to participation in the program in question." 45 CFR pt. 84, App. A, at p. 405.

While the HEW section 504 regulations relating to postsecondary education require recipients to modify any academic requirements that might discriminate against the qualified handicapped and, futher, require the provision of educational "auxiliary aids" (*e.g.*, taped texts, interpreters, classroom equipment, readers in libraries) (45 CFR 84.44(a), (d)) where necessary to avoid discrimination, the Court noted these regulatory provisions did not require fundamental programmatic and personal service adjustments needed by the respondent.

First, the Court noted that petitioner's training program required "the ability to understand speech without reliance on lipreading" to ensure "patient safety during the clinical phase of the program," and that the respondent would require the "close individual attention by a nursing instructor" in order to participate effectively in clinical work. *Id.*, at 407–409. However, the HEW regulation requiring auxiliary aid specifically excludes "attendants, individually prescribed devices, readers for personal use or other study, or other devices or services of a personal nature." 45 CFR 84.44(d)(2). Accordingly, in the Court's view, the law did not require the petitioner to provide respondent with an attendant nursing instructor since, in the context of a clinical program where each student would be required to deal individually with patients, this would have constituted "services of a personal nature." Hence the respondent could not qualify for the clinical segment of the training program and would be confined to taking academic courses only.

Second, academic "modifications" set forth in the HEW regulation include (but are not necessarily limited to):

> Changes in the length of time permitted for the completion of degree requirements, substitution of specific courses required for the completion of degreee requirements, and adaptation of the manner in which specific courses are conducted. (45 CFR 84.44).

However, as the Court saw it, such required modifications did not encompass a curricular change which waived effective participation in a critical component of a degree program in registered nursing. "Whatever benefits respondent might realize from such a course of study, she would not receive even a rough equivalent of the training a nursing program normally gives." *Id.*, at 410.

While rejecting respondent's gloss on section 504 and HEW's implementing regulations, the Court inferentially upheld the HEW regulation mandating modification in admission criteria for the qualified handicapped by noting that "situations may arise where a refusal to modify an existing program might become unreasonable and discriminatory." *Id.*, at 412–413. This subpart is consistent with the holding in *Davis* for it prohibits discrimination only against the qualified handicapped in the Agency's federally assisted programs and activities.

HEW has construed section 504 to prohibit employment discrimination against the handicapped in all programs receiving Federal financial assistance. See HEW's section 504 regulations, 42 FR 22680 (May 4, 1977) and 45 CFR 84.11 (1979). Several courts have construed section 504 to cover employment discrimination. See, *e.g.*, *Duran* v. *City of Tampa*, 430 F. Supp. 75 (M.D. Fla. 1977), *Drennon* v. *Philadelphia General Hospital*, 428 F. Supp. 809 (E.D. Pa 1977), To date, two courts of appeals have taken a narrower view. In *Trageser* v. *Libbie Rehabilitation Center, Inc.*, 590 F.2d 87 (4th Cir. 1978), *cert. denied*, 442 U.S. 947 (1979); *Carmi* v. *Metropolitan St. Louis Sewer District*, No. 79–1325 (8th Cir. May 6, 1980). In *Trageser*, the

court held that employment discrimination is prohibited by section 504 only to the extent that it is prohibited by Title VI of the Civil Rights Act of 1964, 42 U.S.C. 2000d *et. seq.* (1970). Title VI, which prohibits racial discrimination in programs receiving Federal financial assistance, covers employment discrimination only (1) "where a primary objective of the Federal financial assistance is to provide employment" (section 604 of Title VI, 42 U.S.C. 2000d-3 (1970), or (2) when the recipient's employment discrimination results in discrimination against the ultimate beneficiaries of the program receiving Federal financial assistance (see *Caulfield* v. *Board of Education,* 583 F.2d 605 (2d Cir. 1978)). Neither of these factors was present in *Trageser.*

The court's decision appears to rest solely on the language of section 120(a) of the Rehabilitation Act Amendments of 1978, which provides that "the remedies, procedures, and rights set forth in Title VI of the Civil Rights Act of 1964 shall be available" to persons aggrieved because of section 504 violations. Accordingly, "in the absence of legislative history to the contrary," the court held that section 120(a) of the Rehabilitation Act Amendments 1978 incorporated the limitations of Title VI coverage as to employment discrimination. *Id.,* at 89.

The court, in its analysis, did not focus on the remedial purpose of section 504 to provide broad protections to the handicapped. Nor did the court consider the legislative history of the Rehabilitation Act of 1973 and its subsequent amendments which reflect the continuing congressional concern for the employment problems of the handicapped. See, *e.g.,* S. Rep. No. 93-318, 93rd Cong., 1st Sess. 18-19, 70 (1973); S. Rep. No. 93-319, 93rd Cong., 1st Sess. 2, 8 (1973); H.R. Rep. No. 95-1149, 95th Cong., 2d Sess. 16, 18, 23-29, 34, 38, 42-43 (1978); S. Rep. No. 95-890, 95th Cong., 2d Sess. 8, 13, 20-21, 27, 36 (1978); H.R. Conf. Rep. No. 95-1780, 95th Cong., 2d Sess. 80-81, 94-96, 98, 102 (1978). Further, the legislative history of section 120(a), which apparently was not brought to the attention of the court, indicates that the provision was not intended to limit the scope of section 504 but was merely a legislative ratification of HEW's enforcement procedures under section 504.

Section 120(a) was originally a provision in S. 2600 (95th Cong., 2d Sess., Section 118(a) (1978)); the Senate version of the Rehabilitation Act Amendments of 1978 reported by the Senate Committee on Human Resources on May 15, 1978. The Committee stated, with respect to section 120(a):

> It is the committee's understanding that the regulations promulgated by the Department of Health, Education, and Welfare with respect to procedures, remedies, and rights under section 504 conform with those promulgated under title VI. Thus, *this amendment codifies existing practice as a specific statutory requirement.* (Sen. Rep. No. 95-890, 95th Cong., 2d Sess. 19 (1978).) (Emphasis added)

In view of the legislative history of the Rehabilitation Act of 1973 and its amendments, HEW's administrative construction, the remedial nature of section 504 and the legislative history of section 120(a), the Veterans Administration believes that the employment practices of recipients of Federal financial assistance are covered by section 504 regardless of the purpose of the assistance, and the agency's proposed regulations reflect this view (§§ 18d.11-18d.14).

At least one other court, when confronted with the rationale of the *Trageser* decision, has also rejected the limitation of section 504 to the analogous bounds of section 604 of Title VI. In that decision, *Hart* v. *Alameda County Probation Department,* 485 F. Supp. 66 (N.D. Cal., 1979), the court, examining the legislative history of section 504, rejected the inference that the 1978 amendments restricted the scope of section 504. Further, the court found that Congressional intent was to expand the remedies of the Act, thus, covering employment in programs receiving Federal financial assistance.

Comments have been received which object to the coverage of employment practices in programs receiving Federal financial assistance. The arguments of these commenters, similar to those raised in the foregoing discussion, have been fully considered. We do not find that the arguments offered constitute the better view of the law nor do they comport with the purpose of section 504 as reflected by its legislative history.

Rulemaking History

A proposed version of Subpart D of Part 18 of title 38, Code of Federal Regulations, was published for notice and comment in the **Federal Register** on May 3, 1978 (43 FR 19166).[1] In response to that proposal, the VA received a small number of public comments including those made at the public hearing held June 26, 1978. Those comments covered a variety of issues; many of which were duplicative. Some commenters suggested that the proposed regulation went too far, while others complained that it did not go far enough. Many of the issues raised by the comments were fully considered in designing the proposed regulation, and are addressed elsewhere in this commentary. In most instances, the Veterans Administration continues in the view that the proposed regulation represented the best resolution of the conflicting viewpoints.

HEW's review of the proposed final regulations, conducted pursuant to 45 CFR 85.4(b), found no major inconsistencies between the VA regulation and the Executive Order guidelines. However, HEW requested several changes which it viewed as required by the Executive Order. Those changes have resulted in the addition of § 18.403(j)(2)(iv)(B), relating to persons treated as having an impairment, and a redesignation of the proposed section; deletion of proposed § 18.403(k)(4), concerning training in VA health care facilities; deletion of proposed § 18.405(d), covering outside services; and deletion of proposed § 18.409(b), which would have permitted the Administrator to exempt certain recipients from compliance. Also, at HEW's request § 18.405(c), which would have in certain circumstances permitted the granting of a waiver for portions of a recipient's programs, was revised to analogize it to 38 CFR 18.4(d) which governs the scope of coverage of Title VI of the Civil Rights Act of 1964.

Additionally, at HEW's request, §§ 18.404(d), covering communications, 18.406(c)(3), covering self-evaluation by new recipients, and 18.407(b), covering grievance procedures were added. Also, § 18.414(b), providing for preemployment inquiry, was changed. Other sections have had minor revisions made to make the regulations resemble those of HEW more closely.

Other comments ranged widely in scope. One comment requested specific inclusion in § 18.403(f) of the term "subrecipient." The definition of recipient in § 18.403(f) adequately covers the concept of subrecipiency and therefore obviates the need for a separate definition. Also, proposed § 18.405(d) which related to the use of outside individuals or organizations was deleted. Section 18.403(f) covers this situation.

Comments concerning § 18.403(h) raised objection to the scope of coverage. One commenter requested that coverage be extended to contracts of insurance and guarantee. For well-established reasons the VA is unable to extend coverage to those areas. Section 504 was modeled on Title VI of the Civil Rights Act of 1964 and Title IX of the Education Act Amendments of 1972.

[1] Originally proposed as 38 CFR Part 18d.

Neither of the models prohibit discrimination in contracts of insurance or guarantee.

On the other hand, one comment suggested that the scope of coverage was too broad and that it might be used to bind private employers who do not receive Federal financial assistance. The specific circumstances involved veterans' on-the-job and apprenticeship programs. Present interpretation by this agency is that an employer's participation in either of those programs would bring them within the purview of section 504.

Another comment suggested modifying § 18.403(j), defining "handicapped person," to emphasize serving those with the most severe disabilities. Such an emphasis is not proper as a part of the regulation. Nor is such emphasis in line with the full intent of section 504.

One comment raised a question whether "essential functions" in the definition of "qualified handicapped person" in § 18.403(k)(l) means employers may be forced to split jobs to accommodate the handicapped. The phrase is useful in emphasizing that handicapped persons should not be disqualified simply because they may have difficulty in performing tasks that bear only a marginal relationship to a particular job. In some instances job modification can be anticipated as reasonable accommodation to the handicapped person who can perform the "essential functions" of the job. Another comment suggested that the definition of a "qualified handicapped person" be strengthened by requiring an employer to show that a handicapped person is not qualified for employment. In light of §§ 18.411–18.414 of the regulations covering employment practices, modification of this section, is unwarranted and would be inconsistent with the concept of reasonable accommodation.

Several comments were received concerning unnecessarily separate services for handicapped persons. One comment sought the deletion of § 18.404(b)(2) which provides for equal opportunity for handicapped persons to achieve the same benefit in the most integrated setting appropriate to the person's needs. That comment expressed the opinion that the language of § 18.404(b)(1)(iv) was sufficient. Another comment sought expansion of § 18.404(b)(3) to require all programs and activities to be administered in the most integrated setting appropriate. The VA adheres to the rule as proposed which is in conformance with that of HEW. The HEW regulations are based upon the concept of equal effectiveness in the most integrated setting appropriate. To impose a different standard from that of the HEW regulations would cause confusion among recipients who must comply with both HEW and VA regulations.

Comments were received requesting that the regulation address the needs of persons with impaired hearing and vision. Consequently, § 18.404(d) has been added to require a recipient to take appropriate action to ensure such communication. The section follows that of 45 CFR 85.51(e) of the HEW Guidelines. These changes are not intended to constitute a substantive deviation from the HEW regulations.

Objections were received to the waiver provisions of § 18.405(c). As discussed previously, § 18.405(c) has been revised and the provisions permitting waiver removed. The section as it now exists is analogous to the extent of coverage by Title VI of a recipient's facilities.

One comment suggested that the remedial action of § 18.406(a) did not afford relief for those handicapped persons who were in a program but were not receiving full benefits because of discrimination. The VA concurs that the circumstance should be covered and consequently § 18.406(a)(3)(iii) has been added.

Objection was also expressed, in several comments, to the fifteen employee limitation which appears throughout the regulations. This approach is used to avoid imposing requirements on small recipients that would create unnecessary and counterproductive paper work burdens on them and unduly stretch the enforcement resources of the VA. Section 18.409 permits the Administrator to require a small recipient to comply with §§ 18.407 and 18.408, in whole or in part, when a violation is found or when it will not impair the ability of the recipient to provide benefits.

One comment suggested that the 1-year period for self-evaluation contained in § 18.406(c) should be shortened to prevent further discrimination. The self-evaluation provisions are multifaceted and if properly implemented require considerable time. Reduction of the time within which a recipient must complete the process might serve to reduce effectiveness. Consequently, the time limit remains unchanged.

In response to comments objecting to § 18.409(b), which would have permitted at the Administrator's discretion the exemption of certain recipients from compliances with §§ 18.406(c) and 18.407, the section has been deleted. The section was considered to be inconsistent with the agency-wide coordination regulations.

One comment regarding § 18.412 objected to the circumstances under which some recipients might avoid making reasonable accommodation because it would constitute an undue hardship on the operation of their programs. The section as it stands constitutes a fair balancing of the interests involved. The standards for application of undue hardship are reasonably clear; thus all parties are protected.

Section 18.413, concerning among other things tests, was objected to because of the possibility of adverse impact of tests upon handicapped persons. This regulation is an application of the principle established under Title VII of the Civil Rights Act of 1964 in *Griggs* v. *Duke Power Company*, 401 U.S. 424 (1971). Simply stated, once it is shown that an employment test substantially limits the opportunities of handicapped persons, the employer must show the test to be job-related. The regulation as it stands is consistent with HEW's regulations and constitutes a workable rule.

Several comments were received regarding preemployment medical examinations. One comment objected to the form of our proposed § 18.414 referring to the analogous section of HEW's regulation. Section 18.414(b) has been revised to conform more closely to the HEW regulation. This resolves the issues raised in the comments.

Several comments requested that special provisions relating to program accessibility in historic properties be included in the regulations. The purpose of the suggested provisions was to increase protection of historic properties. In view of the already existing protections afforded historic properties by other provisions of law, the suggested additions are unnecessary. Also, the language of § 18.422 provides different standards of accessibility for existing facilities.

One comment requested that § 18.422(c) relating to certain recipients with less than fifteen employees, should be modified by language similar to that contained in § 18.433(c) in referral situations. Accordingly, § 18.422(c) has been amended to make such provision.

The Architectural and Transportation Barriers Compliance Board suggested that the regulation provide the Architectural Barriers Act is applicable to new construction. Since the provisions of the Architectural Barriers Act would only apply in limited circumstances, reference to the Act could possibly result in misinterpretation of the regulations. Of

course, those recipients receiving grants requiring compliance with the Act would be otherwise aware of its applicability. The Board of course will be consulted as required by the coordination regulation, 45 CFR 85.7(a).

One comment requested that the last sentence of § 18.423(c) should be amended to provide for "usability of" the facility. The purpose of the change would be to provide not only for equivalent access but also for equivalent use. The change has been adopted.

In response to an objection that the standard in § 18.423(c) is inadequate, it is noted that the 1971 ANSI standard for making buildings and facilities accessible to, and usable by, the physically handicapped is used to determine whether compliance has occurred in the design, construction or alteration of a facility by a recipient. The Veterans Administration is aware that development of a new ANSI standard in this area was completed in December 1979 and was formally published in May 1980. It is unclear at the moment whether that standard or a modification thereof will be adopted as a Federal standard. The Veterans Administration intends to adopt whatever standard is accepted throughout the Federal government and will modify these regulations accordingly at the appropriate time.

Several comments addressed various provisions of the regulations as they might conflict with other provisions of law, principally section 503 of the Rehabilitation Act of 1973. The issues raised by the comments are covered in the agency wide coordination regulations, 45 CFR 85.7(b). The regulations as they stand do not create a conflict.

Comments were received concerning the proposed enforcement of these regulations. Some recipients of Federal funds will be subject to the regulations of the VA, as well as other government agencies. A delegation of section 504 responsibility between the VA and other agencies is contemplated to eliminate duplication and will be similar to the existing delegation regarding Title VI of the Civil Rights Act of 1964. *See* 38 CFR Part 18a. Under the Title VI delegation of responsibility, HEW (now Department of Education and Department of Health and Human Services) has responsibility for institutions of higher learning, public schools, hospitals, and other health facilities; and the VA is responsible for proprietary schools.

One comment suggested that Appendix A to the regulations provide a listing of not only those programs covered but also those programs not covered. Such a listing would be of little use since coverage by these regulations would be well known to both recipients and program participants.

Provisions have been made to make these regulations available to the visually impaired.

Approved: September 17, 1980.

Max Cleland,

Administrator.

Part 18 of Title 38 of the Code of Federal Regulations is amended by designating §§ 18.1 through 18.13 and Appendices A and B as "Subpart A—General" and by adding a new Subpart D to read as set forth below. Subparts B and C will be reserved.

Subpart D—Nondiscrimination on the Basis of Handicap in Programs and Activities Receiving or Benefiting from Federal Financial Assistance

General Provisions

Sec.
18.401 Purpose.
18.402 Application.
18.403 Definitions.
18.404 Discrimination prohibited.
18.405 Assurances required.
18.406 Remedial action, voluntary action and self-evaluation.
18.407 Designation of responsible employee and adoption of grievance procedures.
18.408 Notice.
18.409 Administrative requirements for certain recipients.
18.410 Effect of State or local law or other requirements and effect of employment opportunities.

Employment Practices

18.411 Discrimination prohibited.
18.412 Reasonable accommodation.
18.413 Employment criteria.
18.414 Preemployment inquiries.

Program Accessibility

18.421 Discrimination prohibited.
18.422 Existing facilities.
18.423 New construction.

Elementary, Secondary, and Adult Education

18.431 Application.
18.432 Location and notification.
18.433 Free appropriate public education.
18.434 Education setting.
18.435 Evaluation and placement.
18.436 Procedural safeguards.
18.437 Nonacademic services.
18.438 Adult education programs.
18.439 Private education programs.

Postsecondary Education

18.441 Application.
18.442 Admissions and recruitment.
18.443 General treatment of students.
18.444 Academic adjustments.
18.445 Housing.
18.446 Financial and employment assistance to students.
18.447 Nonacademic services.

Health and Social Services

Sec.
18.451 Application
18.452 Health and other social services.
18.453 Drug and alcohol addicts.
18.454 Education of institutionalized persons.

Procedures

18.461 Procedures.

Appendix A.—Statutory Provisions to Which This Part Applies.

Authority: Sec. 504, Rehabilitation Act of 1973, Pub. L. 93–112, 87 Stat. 394 (29 U.S.C. 794); sec. 111(a), Rehabilitation Act Amendments of 1974, Pub. L. 93–516, 88 Stat. 1619 (29 U.S.C. 706); sec. 122(d(2), Rehabilitation, Comprehensive Services, and Developmental Disabilities Amendments of 1978, 92 Stat. 2985 (29 U.S.C. 794).

Subpart D—Nondiscrimination on the Basis of Handicap in Programs and Activities Receiving or Benefiting From Federal Financial Assistance

General Provisions

§ 18.401 Purpose.

The purpose of this part is to effectuate section 504 of the Rehabilitation Act of 1973, which is designed to eliminate discrimination on the basis of handicap in any program or activity receiving Federal financial assistance.

§ 18.402 Application.

This part applies to each recipient of Federal financial assistance from the Veterans Administration and to each program or activity that receives or benefits from such assistance.

§ 18.403 Definitions.

As used in this part, the term:

(a) "The Act" means the Rehabilitation Act of 1973, Pub. L. 93–112, as amended by the Rehabilitation Act Amendments of 1974, Pub. L. 93–516, and Rehabilitation, Comprehensive Services, and Developmental Disabilities Amendments of 1978, Pub. L. 95–602, 29 U.S.C. 794.

(b) "Section 504" means section 504 of the Act.

(c) "Education of the Handicapped Act" means that statute as amended by the Education for all Handicapped Children Act of 1975, Pub. L. 94–142, 20 U.S.C. 1401 *et seq.*

(d) "Agency" means the Veterans Administration.

(e) "Administrator" means the Administrator of Veterans Affairs.

(f) "Recipient" means any State or its political subdivision, any instrumentality of a State or its political subdivision, any public or private agency, institution, organization, or other entity, or any person to which Federal financial assistance is extended

directly or through another recipient, including any successor, assignee, or transferee of a recipient but excluding the ultimate beneficiary of the assistance.

(g) "Applicant for assistance" means one who submits an application, request, or plan required to be approved by an Agency official or by a recipient as a condition to eligibility for Federal financial assistance.

(h) "Federal financial assistance" means any grant, loan, contract (other than a procurement contract or a contract of insurance or guaranty), or any other arrangement by which the Agency provides or otherwise makes available assistance in the form of:

(1) Funds, including funds extended to any entity for payment to or on behalf of students admitted to that entity, extended directly to those students for payment to that entity, or extended directly to those students contingent upon their participation in a program of education or training of that entity;

(2) Services of Federal personnel; or

(3) Real and personal property or any interest in or use of property, including;

(i) Transfers or leases of such property for less than fair market value or for reduced consideration; and

(ii) Proceeds from a subsequent transfer or lease of such property if the Federal share of its fair market value is not returned to the Federal Government.

(i) "Facility" means all or any portion of buildings, structures, equipment, roads, walks, parking lots, or other real or personal property or interest in such property.

(j) "Handicapped person." (1) Handicapped person means any person who:

(i) Has a physical or mental impairment which substantially limits one or more major life activities;

(ii) Has a record of such an impairment; or

(iii) Is regarded as having such an impairment.

(2) As used in paragraph (j)(1) of this section, the phrase:

(i) "Physical or mental impairment" means:

(A) Any physiological disorder or condition, cosmetic disfigurement, or anatomical loss affecting one or more of the following body systems: neurological, musculoskeletal; special sense organs including speech organs; respiratory; cardiovascular; reproductive; digestive; genitourinary; hemic and lymphatic; skin; and endocrine; or

(B) Any mental or psychological discorder, such as mental retardation, organic brain syndrome, emotional or mental illness, and specific learning disabilities.

(C) The term "physical or mental impairment" includes, but is not limited to, such diseases and conditions as orthopedic, visual, speech and hearing impairments, cerebral palsy, epilepsy, muscular dystrophy, multiple sclerosis, cancer, heart disease, diabetes, mental retardation, emotional illness, drug addiction and alcoholism.

(ii) "Major life activities" means functions such as caring for one's self, performing manual tasks, walking, seeing, hearing, speaking, breathing, learning and working.

(iii) "Has a record of such an impairment" means has a history of, or has been misclassified as having, a mental or physical impairment that substantially limits one or more major life activities.

(iv) "Is regarded as having an impairment" means:

(A) Has a physical or mental impairment that does not substantially limit major life activities but is treated by a recipient as constituting such a limitation;

(B) Has a physical or mental impairment that substantially limits major life activities only as a result of the attitudes of others toward such impairment;

(C) Has none of the impairments defined in paragraph (j)(2)(i) of this section, but is treated by a recipient as having such an impairment.

(k) "Qualified handicapped person" means:

(1) With respect to employment, a handicapped person who, with reasonable accommodation, can perform the essential functions of the job in question;

(2) With respect to public elementary, secondary, or adult educational services, a handicapped person:

(i) Of an age during which nonhandicapped persons are provided such services;

(ii) Of any age during which it is mandatory under State laws to provide such services to handicapped persons; or

(iii) To whom a State is required to provide a free appropriate public education under section 612 of the Education of the Handicapped Act; and

(3) With respect to postsecondary and vocational education services, a handicapped person who meets the academic and technical standards requisite to admission or participation in the recipient's education program or activity; and

(4) With respect to other services, a handicapped person who meets the essential eligibility requirements for the receipt of such services.

(l) "Handicap" means any condition or characteristic that renders a person a handicapped person as defined in paragraph (j) of this section.

§18.404 Discrimination prohibited.

(a) *General.* No qualified handicapped person shall, on the basis of handicap, be excluded from participation in, be denied the benefits of, or otherwise be subjected to discrimination under any program or activity which receives or benefits from Federal financial assistance.

(b) *Discriminatory actions prohibited.* (1) A recipient, in providing an aid, benefit, or service, may not, directly or through contractual, licensing, or other arrangements, on the basis of handicap:

(i) Deny a qualified handicapped person the opportunity to participate in or benefit from the aid, benefit, or service that is equal to that afforded others;

(ii) Afford a qualified handicapped person an opportunity to participate in or benefit from the aid, benefit, or service that is not equal to that afforded others;

(iii) Provide a qualified handicapped person with an aid, benefit, or service that is not as effective as that provided to others;

(iv) Provide different or separate aid, benefits, or services to handicapped persons or to any class of handicapped persons unless such action is necessary to provide qualified handicapped persons with aid, benefits, or services that are as effective as those provided to others;

(v) Aid or perpetuate discrimination against a qualified handicapped person by providing significant assistance to an agency, organization, or person that discriminates on the basis of handicap in providing any aid, benefit, or service to beneficiaries of the recipient's program;

(vi) Deny a qualified handicapped person the opportunity to participate as a member of planning or advisory boards; or

(vii) Otherwise limit a qualified handicapped person in the enjoyment of any right, privilege, advantage, or opportunity enjoyed by others receiving an aid, benefit, or service.

(2) Aids, benefits, and services, to be equally effective, are not required to produce the identical result or level of achievement for handicapped and nonhandicapped persons, but must give handicapped persons equal opportunity to obtain the same result, to gain the same benefit, or to reach the same level of achievement, in the most integrated

setting appropriate to the person's needs.

(3) Despite the existence of separate or different programs or activities provided in accordance with this part, a recipient may not deny a qualified handicapped person the opportunity to participate in programs or activities that are not separate or different.

(4) A recipient may not, directly or through contractual or other arrangements, utilize criteria or methods of administration that:

(i) Have the effect of subjecting qualified handicapped persons to discrimination on the basis of handicap,

(ii) Have the purpose or effect of defeating or substantially impairing accomplishment of the objectives of the recipient's program with respect to handicapped persons, or

(iii) Perpetuate the discrimination of another recipient if both recipients are subject to common administrative control or are agencies of the same State.

(5) In determining the site or location of a facility, an applicant for assistance or a recipient may not make selections that:

(i) Have the effect of excluding handicapped persons from, deny them the benefits of, or otherwise subject them to discrimination under any program or activity that receives or benefits from Federal financial assistance, or

(ii) Have the purpose or effect of defeating or substantially impairing the accomplishment of the objective of the program or activity with respect to handicapped persons.

(6) As used in this section, the aid, benefit, or service provided under a program or activity receiving or benefiting from Federal financial assistance includes any aid, benefit, or service provided in or through a facility that has been constructed, expanded, altered, leased or rented, or otherwise acquired, in whole of in part, with Federal financial assistance.

(c) *Programs limited by Federal law.* The exclusion of nonhandicapped persons or the exclusion of a specific class of handicapped persons from a program limited by Federal statue or Executive order to a different class of handicapped persons is not prohibited by this part.

(d) *Special communication.* Recipients shall take appropriate action to ensure that communications with their applicants, employees, and beneficiaries are available to persons with impaired vision and hearing.

§ 18.405 Assurances required.

(a) *Assurances.* An applicant for Federal financial assistance for a program or activity to which this part applies shall submit an assurance on a form specified by the Administrator, that the program will be operated in compliance with this part.

(b) *Duration of obligation.* (1) When Federal financial assistance is extended in the form of real property or structures on the property, the assurance will obligate the recipient or, in the case of a subsequent transfer, the transferee, for the period during which the real property or structures are used for the purpose for which Federal financial assistance is extended or for another purpose involving the provisions of similar services or benefits.

(2) Where Federal financial assistance is extended to provide personal property, the assurance will obligate the recipient for the period during which it retains ownership or possession of the property.

(3) In all other cases the assurance will obligate the recipient for the period during which Federal financial assistance is extended.

(c) *Extent of application to institution or facility.* An assurance shall apply to the entire institution or facility unless the applicant establishes, to the satisfaction of the Administrator, that the institution's practices in designated parts or programs of the institution will in no way affect its practices in the program of the institution for which Federal financial assistance is sought, or the beneficiaries of or participants in such a program. If the assistance is being received or requested for the construction of a facility or part of a facility, the assurance shall apply to the entire facility and to other facilities operated in connection with the facility.

(d) *Covenants.* (1) Where Federal financial assistance is provided in the form of real property or interest in the property from the Agency, the instrument effecting or recording this transfer shall contain a covenant running with the land to assure nondiscrimination for the period during which the real property is used for a purpose for which the Federal financial assistance is extended or for another purpose involving the provisions of similar services or benefits.

(2) Where no transfer of property is involved but property is purchased or improved with Federal financial assistance, the recipient shall agree to include the covenant described in paragraph (b)(2) of this section in the instrument effecting or recording any subsequent transfer of property.

(3) Where Federal financial assistance is provided in the form of real property or interest in the property from the Agency, the covenant shall also include a condition coupled with a right to be reserved by the Agency to revert title to the property if there is a breach of the covenant. If a transferree of real property proposes to mortgage or otherwise encumber the real property as security for financing construction of new, or improvement of existing, facilities on the property for the purpose for which the property was transferred, the Administrator may, upon request of the transferee and if necessary to accomplish such financing and upon such conditions as he or she considers appropriate, agree to forbear the exercise of the right to revert title for as long as the lien of the mortgage or other encumbrance remains effective.

(e) *Other methods of enforcement.* (1) Recipients are required to keep such records as the responsible VA official deems necessary for complete and accurate compliance reports. The VA can specify intervals for reporting and prescribe the form and content of information required to ascertain whether the recipient has complied or is complying with the law.

(2) Periodic compliance reviews of training establishments will be conducted by VA compliance officers. During these reviews recipients are required to permit access by VA compliance officers during normal business hours to such of their books, records, accounts, facilities and other sources of information including interviews with personnel and trainees as may be pertinent to ascertain compliance with the law.

(3) From study of documentation, results of interviews, and observation of activities during tours of facilities, compliance officers will evaluate recipients' compliance status.

§ 18.406 Remedial action, voluntary action and self-evaluation.

(a) *Remedial action.* (1) If the Administrator finds that a recipient has discriminated against qualified persons on the basis of handicap in violation of section 504 or this part, the recipient shall take such remedial action as the Administrator considers necessary to overcome the effects of the discrimination.

(2) Where a recipient is found to have discriminated against qualified persons on the basis of handicap in violation of section 504 or this part and where another recipient exercises control over the recipient that has discriminated, the Administrator, where appropriate, may

require either or both recipients to take remedial action.

(3) The Administrator may, where necessary to overcome the effects of discrimination in violation of section 504 or this part, require a recipient to take remedial action with respect to:

(i) Handicapped persons who are no longer participants in the recipient's program but who were participants in the program when such discrimination occurred;

(ii) Handicapped persons who would have been participants in the program had the discrimination not occurred; or

(iii) Handicapped persons presently in the program, but not receiving full benefits or equal and integrated treatment within the program.

(b) *Voluntary action.* A recipient may take steps, in addition to any action that is required by this part, to overcome the effects of conditions that resulted in limited participation in the recipient's program or activity by qualified handicapped persons.

(c) *Self-evaluation.* (1) A recipient shall, within one year of the effective date of this part:

(i) Evaluate with the assistance of interested persons, including handicapped persons or organizations representing handicapped persons, its current policies and practices and the effects of the policies and practices that do not or may not meet the requirements of this part;

(ii) Modify, after consultation with interested persons, including handicapped persons or organizations representing handicapped persons, any policies and practices that do not meet the requirements of this part; and

(iii) Take, after consultation with interested persons, including handicapped persons or organizations representing handicapped persons, appropriate remedial steps to eliminate the effects of any discrimination that resulted from adherence to these policies and practices.

(2) A recipient that employs fifteen or more persons shall, for at least three years following completion of the evaluation required under paragraph (c)(1) of this section, maintain on file, make available for public inspection, and provide to the Administrator upon request:

(i) A list of the interested persons consulted;

(ii) A description of areas examined and any problems identified; and

(iii) A description of any modifications made and of any remedial steps taken.

(3) Recipients who become such more than one year after the effective date of these regulations shall complete these self-evaluation requirements within one year after becoming recipients of Federal financial assistance.

§ 18.407 Designation of responsible employee and adoption of grievance procedures.

(a) *Designation of responsible employee.* A recipient that employs fifteen or more persons shall designate at least one person to coordinate its efforts to comply with this part.

(b) *Adoption of grievance procedures.* A recipient that employs fifteen or more persons shall adopt grievance procedures that incorporate appropriate due process standards and that provide for the prompt and equitable resolution of complaints alleging any action prohibited by this part. Such procedures need not be established with respect to complaints from applicants for employment or from applicants for admission to postsecondary educational institutions.

§ 18.408 Notice.

(a) A recipient that employs fifteen or more persons shall take appropriate initial and continuing steps to notify participants, beneficiaries, applicants, and employees, including those with impaired vision or hearing, and unions or professional organizations holding collective bargaining or professional agreements with the recipient that it does not discriminate on the basis of handicap in violation of section 504 and this part. The notification shall state, where appropriate, that the recipient does not discriminate in admission or access to, or treatment, or employment in, its programs and activities. The notification shall also include an identification of the responsible employee designated under § 18.407. A recipient shall make the initial notification required by this paragraph within 90 days of the effective date of this part. Methods of initial and continuing notification may include the posting of notices, publication in newspapers and magazines, placement of notices in recipient's publication, and distribution of memorandums or other written communications.

(b) If a recipient publishes or uses recruitment materials or publications containing general information that it makes available to participants, beneficiaries, applicants, or employees, it shall include in those materials or publications a statement of the policy described in paragraph (a) of this section. A recipient may meet the requirement of this section either by including appropriate inserts in existing materials and publications or by revising and reprinting the materials and publications.

§ 18.409 Administrative requirements for certain recipients.

The Administrator may require any recipient with fewer than fifteen employees, or any class of such recipients, to comply with §§ 18.407 and 18.408 in whole or in part, when the Administrator finds a violation of this part or finds that such compliance will not significantly impair the ability of the recipient or class of recipients to provide benefits or services.

§ 18.410 Effect of State or local law or other requirements and effect of employment opportunities.

(a) The obligation to comply with this part is not obviated or alleviated by the existence of any State law or other requirement that, on the basis of handicap, imposes prohibitions or limits upon the eligibility of qualified handicapped persons to receive services or to practice any occupation or profession.

(b) The obligation to comply with this part is not obviated or alleviated because employment opportunities in any occupation or profession are or may be more limited for handicapped persons than for nonhandicapped persons.

Employment Practices

§ 18.411 Discrimination prohibited.

(a) *General.* (1) No qualified handicapped person shall, on the basis of handicap, be subjected to discrimination in employment under any program or activity to which this part applies.

(2) A recipient shall make all decisions concerning employment under any program or activity to which this part applies in a manner which ensures that discrimination on the basis of handicap does not occur and may not limit, segregate, or classify applicants or employees in any way that adversely affects their opportunities or status because of handicap.

(3) A recipient may not participate in a contractual or other relationship that has the effect of subjecting qualified handicapped applicants or employees to discrimination in employment. The relationships referred to in this section include relationships with employment and referral agencies, with organizations providing or administering fringe benefits to employees of the recipient, and with organizations providing training and apprenticeship programs.

(b) *Specific activities.* Nondiscrimination in employment applies to:

(1) Recruitment, advertising, and the processing of applications for employment;

(2) Hiring, upgrading, promotion, award of tenure, demotion, transfer, layoff, termination, right of return from layoff, and rehiring;

(3) Rates of pay or other forms of compensation and changes in compensation;

(4) Job assignments, job classifications, organizational structures, position descriptions, lines of progression, and seniority lists;

(5) Leaves of absence, sick leave, or any other leave;

(6) Fringe benefits available by virtue of employment, whether or not administered by the recipient;

(7) Selection and financial support for training, including apprenticeship, professional meetings, conferences, and other related activities, and selection for leaves of absence to pursue training;

(8) Employer sponsored activities, including social or recreational programs; and

(9) Any other term, condition, or privilege of employment.

(c) *Collective bargaining agreements.* A recipient's obligation to comply with this subpart is not affected by any inconsistent term of any collective bargaining agreement to which it is a party.

§ 18.412 Reasonable accommodation.

(a) A recipient shall make reasonable accommodation to the known physical or mental limitations of a handicapped applicant or employee if such accommodation would enable him or her to perform the essential functions of the job unless the recipient can demonstrate that the accommodation would impose an undue hardship on the operation of its program.

(b) Reasonable accommodation may include:

(1) Making facilities used by employees readily accessible to and usable by handicapped persons; and

(2) Job restructuring, part-time or modified work schedules, acquisition or modification of equipment or devices, the provision of readers or interpreters and other similar actions.

(c) In determining under paragraph (a) of this section whether an accommodation would impose an undue hardship on the operation of a recipient's program, factors to be considered include:

(1) The overall size of the recipient's program with respect to number of employees, number and type of facilities, and size of budget;

(2) The type of the recipient's operation, including the composition and structure of the recipient's work force; and

(3) The nature and cost of the accommodation needed.

(d) A recipient may not deny any employment opportunity to a qualified handicapped employee or applicant if the basis for denial is the need to make reasonable accommodation to the physical or mental limitations of the employee or applicant.

§ 18.413 Employment criteria.

(a) A recipient may not use any employment test or other selection criterion that screens out or tends to screen out handicapped persons or any class of handicapped persons unless:

(1) The test score or other selection criterion, as used by the recipient, is shown to be job-related for the position in question; and

(2) Alternative job-related tests or criteria that do not screen out or tend to screen out as many handicapped persons are not shown by the Administrator to be available.

(b) A recipient shall select and administer tests concerning employment to best ensure that when administered to an applicant or employee who has a handicap that impairs sensory, manual, or speaking skills, the test results accurately reflect the applicant's or employee's job skills, aptitude, or whatever other factor the test purports to measure, rather than reflect the applicant's or employee's impaired sensory, manual, or speaking skills (except when those skills are the factors that the test purports to measure).

§ 18.414 Preemployment inquiries.

(a) Except as provided in paragraphs (b) and (c) of this section, a recipient may not conduct a preemployment medical examination or may not make preemployment inquiry of an applicant as to whether the applicant is a handicapped person or as to the nature or severity of a handicap. A recipient may, however, make preemployment inquiry into the applicant's ability to perform job-related functions.

(b) When a recipient is taking remedial action to correct the effects of past discrimination pursuant to § 18.406(a), when a recipient is taking voluntary action to overcome the effects of conditions that resulted in limited participation in its federally assisted program or activity pursuant to § 18.406(b), or when a recipient is taking affirmative action pursuant to section 503 of the Act, the recipient may invite applicants for employment to indicate whether and to what extent they are handicapped, provided that:

(1) The recipient states clearly on any written questionnaire used for this purpose or makes clear orally if no written questionnaire is used that the information requested is intended for use solely in connection with its remedial action obligations or its voluntary or affirmative action efforts; and

(2) The recipient states clearly that the information is being requested on a voluntary basis, that it will be kept confidential as provided in paragraph (d) of this section, that refusal to provide it will not subject the applicant or employee to any adverse treatment, and that it will be used only in accordance with this part.

(c) Nothing in this section shall prohibit a recipient from conditioning an offer of employment on the results of a medical examination conducted prior to the employee's entrance on duty, provided that: (1) All entering employees are subjected to such an examination regardless of handicap, and (2) the results of such an examination are used only in accordance with the requirements of this part.

(d) Information obtained in accordance with this section as to the medical condition or history of the applicant shall be collected and maintained on separate forms that shall be accorded confidentiality as medical records, except that:

(1) Supervisors and managers may be informed regarding restrictions on the work or duties of handicapped persons and regarding necessary accomodations;

(2) First aid and safety personnel may be informed, where appropriate, if the condition might require emergency treatment;

(3) Government officials investigating compliance with the Act shall be provide relevant information upon request.

Program Accessibility

§ 18.421 Discrimination prohibited.

No qualified handicapped person shall, because a recipient's facilities are inaccessible to or unusable by handicapped persons, be denied the benefits of, be excluded from participation in, or otherwise be subjected to discrimination under any program or activity to which this part applies.

§ 18.422 Existing facilities.

(a) *Program accessibility.* A recipient shall operate each program or activity to which this part applies so that the program or activity, when viewed in its

entirety, is readily accessible to handicapped persons. This paragraph does not require a recipient to make each of its existing facilities or every part of a facility accessible to and usable by handicapped persons.

(b) *Methods.* A recipient may comply with the requirement of paragraph (a) of this section through such measures as redesign of equipment, reassignment of classes or other services to accessible buildings, assignment of aids to beneficiaries, home visits, delivery of health, or other social services at alternate accessible sites, alteration of existing facilities and construction of new facilities in conformance with § 18.423 or any other methods that make its program or activity accessible to handicapped persons. A recipient is not required to make structural changes in existing facilities where other methods are effective in making its programs or activities readily accessible to handicapped persons. In choosing among available methods for complying with paragraph (a) of this section, a recipient shall give priority to methods that offer programs and activities to handicapped persons in the most integrated setting appropriate.

(c) *Small health, welfare or other social service providers, and recipients that operate other than educational programs or activities.* If a recipient with fewer than fifteen employees finds after consultation with a handicapped person seeking its services that there is no method of complying with paragraph (a) of this section other than making a significant alteration in its existing facilities, the recipient may, as an alternative, refer the qualified handicapped person to other providers whose services are accessible. Where referrals are necessary, transportation costs shall not exceed costs to and from recipients' programs.

(d) *Time period.* A recipient shall comply with paragraph (a) of this section within 60 days of the effective date of this part except that when structural changes in facilities are necessary, these changes shall be made as soon as practicable, but not later than three years after the effective date of this part.

(e) *Transition plan.* If structural changes to facilities are necessary to meet the requirements of paragraph (a) of this section, a recipient shall develop a transition plan within six months of the effective date of this part setting forth the steps necessary to complete such change. The plan shall be developed with the assistance of interested persons, including handicapped persons or organizations representing handicapped persons. A copy of the transition plan shall be available for public inspection. The plan shall, at a minimum:

(1) Identify physical obstacles in the recipient's facilities that limit the accessibility of its program or activity to handicapped persons;

(2) Describe in detail the methods that will be used to make the facilities accessible;

(3) Specify the schedule for taking the steps necessary to achieve full program accessibility and, if the time period of the transition plan is longer than one year, identify steps that will be taken during each year of the transition period; and

(4) Indicate the person responsible for implementation of the plan.

(f) *Notice.* The recipient shall implement procedures to ensure that interested persons, including persons with impaired vision or hearing, can obtain information concerning the existence and location of services, activities, and facilities that are accessible to and usable by handicapped persons.

§ 18.423 New construction.

(a) *Design and construction.* Each facility or part of a facility constructed by, on behalf of, or for the use of a recipient shall be designed and constructed so that the facility or part of the facility is readily accessible to and usable by handicapped persons, if the construction was commenced after the effective date of this part.

(b) *Alteration.* Each facility or part of a facility which is altered by, on behalf of, or for the use of a recipient after the effective date of this part in a manner that affects or could affect the usability of the facility or part of the facility shall, to the maximum extent feasible, be altered so that the altered portion of the facility is readily accessible to and usable by handicapped persons.

(c) *American National Standards Institute accessibility standards.* Design, construction, or alteration of facilities in conformance with the "American National Standard Specifications for Making Building and Facilities Accessible to, and Usable by, the Physically Handicapped,"[1] published by the American National Standards Institute, Inc. (ANSI A117.1-1961(R1971)), which was approved on May 2, 1978 for incorporation by reference in this part, shall constitute compliance with paragraphs (a) and (b) of this section. Departures from particular requirements of those standards by the use of other methods shall be permitted when it is clearly evident that equivalent access to and usability of the facility is provided.

[1] Copies obtainable from American National Standards Institute, Inc., 1430 Broadway, New York, NY, 10018. A copy of this standard is on file in the Federal Register Library.

Elementary, Secondary, and Adult Education

§ 18.431 Application.

Sections 18.431—18.439 apply to elementary, secondary, and adult education programs and activities that receive or benefit from Federal financial assistance from the Veterans Administration and to recipients that operate or receive or benefit from Federal financial assistance for the operation of such programs or activities.

§ 18.432 Location and notification.

A recipient that operates a public elementary or secondary educational program shall annually:

(a) Undertake to identify and locate every qualified handicapped person residing in the recipient's jurisdiction who is not receiving a public education; and

(b) Take appropriate steps to notify handicapped persons their parents or guardians of the recipients's duty under §§ 18.431—18.439.

§ 18.433 Free appropriate public education.

(a) *General.* A recipient that operates a public elementary or secondary education program shall provide a free appropriate public education to each qualified handicapped person who is in the recipient's jurisdiction, regardless of the nature or severity of the person's handicap.

(b) *Appropriate education.* (1) The provision of an appropriate education is the provision of regular or special education and related aids and services that:

(i) Are designed to meet individual educational needs of handicapped persons as adequately as the needs of nonhandicapped persons are met; and

(ii) Are based upon adherence to procedures that satisfy the requirements of §§ 18.434, 18.435, and 18.436.

(2) Implementation of an individualized education program developed in accordance with the Education of the Handicapped Act is one means of meeting the standard established in paragraph (b)(1)(i) of this section.

(3) A recipient may place a qualified handicapped person in or refer that person to a program other than the one that it operates as its means of carrying out the requirements of §§ 18.431—18.439. The recipients remain responsible for ensuring that the requirements of §§ 18.431—18.439 are

met with respect to any qualified handicapped person so placed or referred.

(c) *Free education.* (1) The provision of a free education is the provision of educational and related services without cost to the handicapped person or to his or her parents or guardian, except for those fees that are imposed on nonhandicapped persons or their parents or guardian. It may consist either of the provision of free services or, if a recipient places a handicapped person in or refers that person to a program not operated by the recipient as its means of carrying out the requirements of §§ 18.431—18.439, of payment for the costs of the program. Funds available from any public or private agency may be used to meet the requirements of this subpart. Nothing in this section shall be construed to relieve an insurer or similar third party from an otherwise valid obligation to provide or pay for services provided to a handicapped person.

(2) If a recipient places a handicapped person in or refers that person to a program not operated by the recipient as its means of carrying out the requirements of this subpart, the recipient shall ensure that adequate transportation to and from the program is provided at no greater cost that would be incurred by the person or his or her parents or guardian if the person were placed in the program operated by the recipient.

(3) If placement in a public or private residential program is necessary to provide free appropriate public education to a handicapped person because of his or her handicap, the program, including non-medical care and room and board, shall be provided at no cost to the person or his or her parents or guardian.

(4) If a recipient has made available, in conformance with this section and § 18.434, a free appropriate public education to a handicapped person and the person's parents or guardian chooses to place the person in a private school, the recipient is not required to pay for the person's education in the private school. Disagreements between a parent or guardian and a recipient regarding whether the recipient has made such a program available or regarding the question of financial responsibility are subject to the due process procedures of § 18.436.

(d) *Compliance.* A recipient may not exclude any qualified handicapped person from a public elementary or secondary education after the effective date of this part. A recipient that is not, on the effective date of this part, in full compliance with the requirements of paragraphs (a) through (c) of this section shall meet those requirements at the earliest practicable time, but not later than October 1, 1981.

§ 18.434 Education setting.

(a) *Academic setting.* A recipient shall educate, or shall provide for the education of, each qualified handicapped person in its jurisdiction with persons who are not handicapped to the maximum extent appropriate to the needs of the handicapped person. A recipient shall place a handicapped person in the regular educational environment operated by the recipient unless it is demonstrated by the recipient that the education of the person in the regular environment with the use of supplementary aids and services cannot be achieved satisfactorily. In deciding whether to place a person in a setting other than the regular educational environment, a recipient shall consider the proximity of the alternate setting to the person's home.

(b) *Nonacademic settings.* In providing or arranging for the provision of nonacademic and extracurricular services and activities, a recipient shall ensure that handicapped persons participate with nonhandicapped persons in those activities and services to the maximum extent appropriate to the needs of the handicapped person in question.

(c) *Comparable facilities.* If a recipient in compliance with paragraph (a) of this section operates a facility that is identifiable as being for handicapped persons, the recipient shall ensure that the facility and the services and activities provided in that facility are comparable to the other facilities, services, and activities of the recipient.

§ 18.435 Evaluation and placement.

(a) *Preplacement evaluation.* A recipient that operates a public elementary or secondary education program shall conduct an evaluation of any qualified person who, because of handicap, needs or is believed to need special education or related services before taking any action concerning the initial placement of the person in a regular or special program and any subsequent change in placement.

(b) *Evaluation procedures.* Elementary, secondary, and adult education programs and activities that receive or benefit from Federal financial assistance shall establish standards and procedures for the evaluation and placement of persons who, because of handicap, need or are believed to need special education or related services which ensure that:

(1) Tests and other evaluation materials have been validated for the specific purpose for which they are used and are administered by trained personnel in conformance with the instructions provided by their producer;

(2) Tests and other evaluation materials include those tailored to assess specific areas of educational need and not merely those which are designed to provide a single general intelligence quotient; and

(3) Tests are selected and administered to best ensure that, when a test is administered to a student with impaired sensory, manual, or speaking skills, the test results accurately reflect the student's aptitude or achievement level or whatever other factor the test purports to measure, rather than reflect the student's impaired sensory, manual, or speaking skills (except where those skills are the factors that the test purports to measure.)

(c) *Placement procedures.* In interpreting evaluation data and in making placement decisions, a recipient shall:

(1) Draw upon information from a variety of sources, including aptitude and achievement tests, teacher recommendations, physical condition, social or cultural background and adaptive behavior;

(2) Establish procedures to ensure that information obtained from all sources is documented and carefully considered;

(3) Ensure that the placement decision is made by a group of persons, including persons knowledgeable about the student, the meaning of the evaluation data and the placement options; and

(4) Ensure that the placement decision is made in accordance with § 18.434.

(d) *Reevaluation.* A recipient to which this section applies shall establish procedures, in accordance with paragraph (b) of this section, for periodic reevaluation of students who have been provided special education and related services. A reevaluation procedure consistent with the Education for the Handicapped Act is one means of meeting this requirement.

§ 18.436 Procedural safeguards.

(a) A recipient that operates a public elementary or secondary education program shall implement a system of procedural safeguards with respect to actions regarding the identification, evaluation, or educational placement of persons who, because of handicap, need or are believed to need special instruction or related services. The system shall include:

(1) Notice;

(2) An opportunity for the parents or guardian of the person to examine relevant records;

(3) An impartial hearing with opportunity for participation by the person's parents or guardian and representation by counsel; and

(4) Review procedure.

(b) Compliance with the procedural safeguards of section 615 of the Education of the Handicapped Act is one means of meeting this requirement.

§ 18.437 Nonacademic services.

(a) *General.* (1) Elementary, secondary, and adult education programs that receive or benefit from Federal financial assistance shall provide nonacademic and extracurricular services and activities in a manner which gives handicapped students an equal opportunity for participation in these services and activities.

(2) Nonacademic and extracurricular services and activities may include counseling services, physical recreational athletics, transportation, health services, recreational activities, special interest groups or clubs sponsored by the recipient, referrals to agencies which provide assistance to handicapped persons, and employment of students, including both employment by the recipient and assistance in making available outside employment.

(b) *Counseling services.* Elementary, secondary, and adult education programs that receive or benefit from Federal financial assistance and that provide personal, academic, or vocational counseling, guidance, or placement services to their students shall provide these services without discrimination on the basis of handicap and shall ensure that qualified handicapped students are not counseled toward more restrictive career objectives than are nonhandicapped students with similar interests and abilities.

(c) *Physical education and athletics.* (1) In providing physical education courses and athletics and similar programs and activities to any of its students, an elementary, secondary, or adult education program or activity that receives or benefits from Federal financial assistance may not discriminate on the basis of handicap. A recipient that offers physical education courses or that operates or sponsors interscholastic, club, or intramural activities shall provide to qualified handicapped students an equal opportunity for participation in these activities.

(2) A recipient may offer to handicapped students physical education and athletic activities that are separate or different from those offered to nonhandicapped students only if separation or differentiation is consistent with the requirements of § 18.434 and only if no qualified handicapped student is denied the opportunity to compete for teams or to participate in courses that are not separate or different.

§ 18.438 Adult education programs.

A recipient that operates an adult education program or activity may not, on the basis of handicap, exclude qualified handicapped persons from the program or activity. The recipient shall take into account the needs of these persons in determining the aid, benefits, or services to be provided under the program or activity.

§ 18.439 Private education programs.

(a) A recipient that operates a private elementary or secondary education program may not on the basis of handicap, exclude a qualified handicapped person from that program if the person can, with minor adjustments, be provided an appropriate education, as defined in § 18.433(b)(1), within the recipient's program.

(b) A recipient may not charge more for providing an appropriate education to handicapped persons than to nonhandicapped persons except to the extent that any additional charge is justified by a substantial increase in cost to the recipient.

(c) A recipient to which this section applies that operates special education programs shall operate those programs in accordance with §§ 18.435 and 18.436. Each recipient to which this section applies is subject to §§ 18.434, 18.437, and 18.438.

Postsecondary Education

§ 18.441 Application.

Sections 18.441–18.447 apply to postsecondary education programs and activities that receive or benefit from Federal financial assistance from the Veterans Administration and to recipients that operate or receive or benefit from Federal financial assistance for the operation of such programs or activities.

§ 18.442 Admissions and recruitment.

(a) *General.* Qualified handicapped persons may not, on the basis of handicap, be denied admission or be subjected to discrimination in admission or recruitment by a recipient.

(b) *Admission.* In administering its admission policies, a recipient:

(1) May not apply limitations on the number or proportion of handicapped persons who may be admitted;

(2) May not use any test or criterion for admission that has a disproportionate, adverse effect on handicapped persons or any class of handicapped persons unless:

(i) The test or criterion, as used by the recipient, has been validated as a predictor of success in the education program or activity in question; and

(ii) Alternate tests or criteria that have a less disproportionate, adverse effect are not shown by the Administrator to be available;

(3) Shall assure itself that:

(i) Admissions tests are selected and administered to best ensure that, when a test is administered to an applicant who has a handicap that impairs sensory, manual, or speaking skills, the test results accurately reflect the applicant's aptitude or achievement level or whatever other factors the test purports to measure, rather than reflect the applicant's impaired sensory, manual, or speaking skills (except where those skills are the factors that the test purports to measure);

(ii) Admissions tests that are designed for persons with impaired sensory, manual, or speaking skills are offered as often and in as timely a manner as are other admissions tests; and

(iii) Admissions tests are administered in facilities that, on the whole, are accessible to handicapped persons; and

(4) Except as provided in paragraph (c) of this section, may not make preadmission inquiries as to whether an applicant for admission is a handicapped person. After admission, the recipient may inquire on a confidential basis as to handicaps that may require accommodation.

(c) *Preadmission inquiry exception.* When a recipient is taking remedial action to correct the effects of past discrimination under § 18.406(a) or when a recipient is taking voluntary action to overcome the effects of conditions that resulted in limited participation in its Federally assisted program or activity under § 18.406(b), the recipient may invite applicants for admission to indicate whether and to what extent they are handicapped.

(1) The recipient shall state clearly on any written questionnaire used for this purpose or make clear orally if no written questionnaire is used that the information requested is intended for use solely in connection with its remedial action obligations or its voluntary action efforts; and

(2) The recipient shall state clearly that the information is being requested on a voluntary basis, that it will be kept

confidential, that refusal to provide it will not subject the applicant to any adverse treatment, and that it will be used only in accordance with this part.

(d) *Validity studies.* For the purpose of paragraph (b)(2) of this section, a recipient may base prediction equations on first year grades, but shall conduct periodic validity studies against the criterion of overall success in the education program or activity in question to monitor the general validity of the test scores.

§ 18.443 General treatment of students.

(a) No qualified handicapped student shall, on the basis of handicap, be excluded from participation in, be denied the benefits of, or otherwise be subjected to discrimination under any academic, research, occupational training, housing, health insurance, counseling, financial aid, physical education, athletics, recreation, transportation, other extracurricular, or other program or activity operated by a recipient to which this subpart applies.

(b) A recipient that considers participation by students in education programs or activities not operated wholly by the recipient as part of, or equivalent to, an education program or activity operated by the recipient shall assure itself that the other education program or activity, as a whole, provides an equal opportunity for the participation of qualified handicapped persons.

(c) A recipient to which this subpart applies may not, on the basis of handicap, exclude any qualified handicapped student from any course, course of study, or other part of its education program or activity.

(d) A recipient shall operate its programs and activities in the most integrated setting appropriate.

§ 18.444 Academic adjustments.

(a) *Academic requirements.* A recipient shall make necessary modifications to its academic requirements to ensure that these requirements do not discriminate or have the effect of discriminating, on the basis of handicap, against a qualified handicapped applicant or student. Modifications may include changes in the length of time permitted for the completion of degree requirements, substitution of specific courses required for the completion of degree requirements, and adaptation of the manner in which specific courses are conducted. Academic requirements that the recipient can demonstrate are essential to the program of instruction being pursued by the student or to any directly related licensing requirement will not be regarded as discriminatory within the meaning of this section.

(b) *Other rules.* A recipient may not impose upon handicapped students other rules, such as the prohibition of tape recorders in classrooms or guide dogs in campus buildings, that have the effect of limiting the participation of handicapped students in the recipient's education program or activity.

(c) *Course examinations.* In its course examinations or other procedures for evaluating students' academic achievement in its program, a recipient shall provide methods for evaluating the achievement of students who have a handicap that impairs sensory, manual, or speaking skills that will best ensure that the results of the evaluation represent the students' achievement in the course, rather than reflect the students' impaired sensory, manual, or speaking skills (except where such skills are the factors that the test purports to measure).

(d) *Auxiliary aids.* (1) A recipient shall ensure that no qualified handicapped student is denied the benefits of, excluded from participation in, or otherwise subjected to discrimination under the education program or activity operated by the recipient because of the absence of educational auxiliary aids for students with impaired sensory, manual, or speaking skills.

(2) Auxiliary aids may include taped texts, interpreters or other effective methods of making orally delivered materials available to students with hearing impairments, readers in libraries for students with visual impairments, classroom equipment adapted for use by students with manual impairments, and other similar services and actions. Recipients need not provide attendants, individually prescribed devices, readers for personal use or study, or other devices or services of a personal nature.

§ 18.445 Housing.

(a) *Housing provided by a recipient.* A recipient that provides housing to its nonhandicapped students shall provide comparable, convenient, and accessible housing to qualified handicapped students at the same cost as to others. At the end of the transition period provided for in § 18.422(e), this housing shall be available in sufficient quantity and variety so that the scope of handicapped students' choice of living accommodations is, as a whole, comparable to that of nonhandicapped students.

(b) *Other housing.* A recipient that assists any agency, organization, or person in making housing available to any of its students shall assure itself that such housing is, as a whole, made available in a manner that does not result in discrimination on the basis of handicap.

§ 18.446 Financial and employment assistance to students.

(a) *Provision of financial assistance.* (1) In providing financial assistance to qualified handicapped persons, a recipient may not:

(i) On the basis of handicap, provide less assistance than is provided to nonhandicapped persons, limit eligibility for assistance, or otherwise discriminate; or

(ii) Assist any entity or person that provides assistance to any of the recipient's students in a manner that discriminates against qualified handicapped persons on the basis of handicap.

(2) A recipient may administer or assist in the administration of scholarships, fellowships, or other forms of financial assistance established under wills, trusts, bequests, or similar legal instruments that require awards to be made on the basis of factors that discriminate or have the effect of discriminating on the basis of handicap only if the overall effect of the award of scholarships, fellowships, and other forms of financial assistance is not discriminatory on the basis of handicap.

(b) *Assistance in making available outside employment.* A recipient that assists any agency, organization, or person in providing employment opportunities to any of its students shall assure itself that these employment opportunities, as a whole, are made available in a manner that would not violate §§ 18.411–18.414 if the opportunities were provided by the recipient.

(c) *Employment of students by recipients.* A recipient that employs any of its students may not do so in a manner that violates §§ 18.411–18.414.

§ 18.447 Nonacademic services.

(a) *Physical education and athletics.* (1) In providing physical education courses and athletics and similar programs and activities to any of its students, a recipient may not discriminate on the basis of handicap. A recipient that offers physical education courses or that operates or sponsors intercollegiate, club or intramural athletics shall provide to qualified handicapped students an equal opportunity for participation in these activities.

(2) A recipient may offer to handicapped students physical education and athletic activities that are separate or different only if separation

or differentiation is consistent with the requirements of § 18.443(d) and only if no qualified handicapped student is denied the opportunity to compete for teams or to participate in courses that are not separate or different.

(b) *Counseling and placement services.* A recipient that provides personal, academic, or vocational counseling, guidance, or placement services to its students shall provide these services without discrimination on the basis of handicap. The recipient shall ensure that qualified handicapped students are not counseled toward more restrictive career objectives than are nonhandicapped students with similar interests and abilities. This requirement does not preclude a recipient from providing factual information about licensing and certification requirements that may present obstacles to handicapped persons in their pursuit of particular careers.

(c) *Social organizations.* A recipient that provides significant assistance to fraternities, sororities, or similar organizations shall assure itself that the membership practices of these organizations do not permit discrimination otherwise prohibited by §§ 18.441–18.447.

Health and Social Services

§ 18.451 Application.

Subpart F applies to health, and other social service programs and activities that receive or benefit from Federal financial assistance from the Veterans Administration and to recipients that operate or receive or benefit from Federal financial assistance for the operation of such programs or activities.

§ 18.452 Health and other social services.

(a) *General.* In providing health, or other social services or benefits, a recipient may not, on the basis of handicap:

(1) Deny a qualified handicapped person these benefits or services;

(2) Give a qualified handicapped person the opportunity to receive benefits or services that are not equal to those offered nonhandicapped persons.

(3) Provide a qualified handicapped person with benefits or services that are not as effective (as defined in § 18.404(b)(2)) as the benefits or services provided to others;

(4) Provide benefits or services in a manner that limits or has the effect of limiting the participation of qualified handicapped persons; or

(5) Provide different or separate benefits or services to handicapped persons except where necessary to provide qualified handicapped persons with benefits and services that are as effective as those provided to others.

(b) *Notice.* A recipient that provides notice concerning benefits or services or written material concerning waivers of rights of consent to treatment shall ensure that qualified handicapped persons, including those with impaired sensory or speaking skills, are not denied effective notice because of their handicap.

(c) *Emergency treatment for the hearing impaired.* A recipient hospital that provides health services or benefits shall establish a procedure for effective communication with persons with impaired hearing for the purpose of providing emergency care.

(d) *Auxiliary aids.* (1) A recipient that employs fifteen or more persons shall provide appropriate auxiliary aids to persons with impaired sensory, manual, or speaking skills, where necessary to give these persons an equal opportunity to benefit from the service in question.

(2) The Administrator may require recipients with fewer than fifteen employees to provide auxiliary aids where the provision of aids would not significantly impair the ability of the recipient to provide its benefits or services.

(3) Auxiliary aids may include brailled and taped material, interpreters, and aids for persons with impaired hearing or vision.

§ 18.453 Drug and alcohol addicts.

A recipient that operates a general hospital or outpatient facility may not discriminate, with regard to a drug or alcohol abuser or alcoholic who is suffering from a medical condition, in the admission of that person for treatment of the medical condition, or in the treatment of the medical condition because of the person's drug or alcohol abuse or alcoholism.

§ 18.454 Education of institutionalized persons.

A recipient that operates or supervises a program or activity for persons who are institutionalized because of handicap and is responsible for providing training shall ensure that each qualified handicapped person, as defined in § 18.403(k)(2), in its program or activity is provided an appropriate education, as defined in § 18.403(b). Nothing in this section shall be interpreted as altering in any way the obligations of recipients under §§ 18.431–18.439.

Procedures

§ 18.461 Procedures.

The procedural provisions applicable to title VI of the Civil Rights Act of 1964 apply to this part. These procedures are found in §§ 18.6 through 18.11 and Part 18b of this Chapter.

Appendix A—Statutory Provisions to Which This Part Applies

1. Payments to State Homes (38 U.S.C. 641–643).
2. State home facilities for furnishing domiciliary, nursing home, and hospital care (38 U.S.C. 5031–5037).
3. Community nursing home care (38 U.S.C. 620).
4. Sharing of medical facilities, equipment, and information (38 U.S.C. 5051–5057).
5. Assitance in establishing new state medical schools, grants to affiliated medical schools; assistance to health manpower training institutions (38 U.S.C. ch. 82).
6. Approval of educational institutions (38 U.S.C. 104).
7. Medical care for survivors and dependents of certain veterans (38 U.S.C. 613).
8. Space and office facilities for representatives of State employment service (38 U.S.C. 244(4)).
9. Space and office facilities for representatives of recognized national service organizations (38 U.S.C. 3402(a)(2)).
10. Vocational rehabilitation, post-Vietnam era veterans educational assistance, and administration of educational assistance (38 U.S.C. chs. 31, 32, 34, 35 and 36 respectively).
11. Automobile and adaptive equipment for certain disabled veterans and members of the Armed Forces (38 U.S.C. ch. 39).
12. Burial benefits (38 U.S.C. ch. 23).

[FR Doc. 80-29627 Filed 9-23-80; 8:45 am]
BILLING CODE 8320-01-M

ENVIRONMENTAL PROTECTION AGENCY

40 CFR Part 52

[FRL 1615-2]

Approval and Promulgation of Implementation Plans: State of Missouri

AGENCY: Environmental Protection Agency (EPA).

ACTION: Notice of receipt.

SUMMARY: In order to satisfy the requirements of Part D of the Clean Air Act, as amended, the State of Missouri revised its State Implementation Plan in 1979. On April 9 and on May 9, 1980, EPA conditionally approved certain elements of Missouri's plan. On September 9, 1980, the State submitted documentation that two of these conditions have been fulfilled. These conditions involve a schedule for implementing an inspection and maintenance (I/M) program for vehicle emissions control and a commitment involving the adoption of difficult

transportation control measures (TCMs). On August 7, 1980, EPA published regulatory changes affecting new source review in nonattainment areas. A third condition, involving the definition of potential emissions, has been addressed by EPA's new regulations.

The purpose of this notice is to advise the public that the State of Missouri has made a submission involving these conditions. EPA is reviewing the material submitted and intends to issue a notice of proposed rulemaking after the review is complete. Until final action is published in the **Federal Register**, the conditional approval of the SIP is being continued.

ADDRESS: Copies of the state's submission are available for inspection during normal business hours at the following locations: EPA, Air Support Branch, 324 East 11th Street, Kansas City, Missouri 64106; EPA Public Information Reference Unit, Room 2922, 401 M Street S.W., Washington, D.C. 20460; Missouri Department of Natural Resources, 2010 Missouri Boulevard, Jefferson City, Missouri 65101.

FOR FURTHER INFORMATION: Contact Wayne G. Leidwanger at 816-374-3791 (FTS 758-3791).

SUPPLEMENTARY INFORMATION: On April 9, 1980, EPA conditionally approved certain elements of Missouri's SIP with regard to the requirements of Part D of the Clean Air Act, as amended. A detailed discussion of that action can be found in the **Federal Register** notice published on that date (45 FR 24140).

One of the conditions promulgated by EPA requires the State of Missouri to develop by August 31, 1980, a schedule which will be followed to lead to a mandatory I/M program for the control of vehicle emissions. The State submitted an I/M program schedule on September 9, 1980.

Another condition of EPA's approval of the Missouri SIP is that the East-West Gateway Coordinating Council (EWGCC) commit by August 31, 1980, to justify any decision not to adopt difficult transportation control measures. EWGCC is the lead planning agency responsible for transportation/air quality planning in the St. Louis area. On September 9, 1980, the State of Missouri submitted a resolution adopted by EWGCC for the purpose of fulfilling this condition.

On May 9, 1980 (45 FR 30626), EPA promulgated final rulemaking on Missouri's regulations for the review and permitting of new or modified sources of air pollutant emissions in nonattainment areas. One of the conditions for approving these regulations was that the state change the definition of potential emissions to be consistent with EPA's definition. In the regulatory changes issued on August 7, 1980 (45 FR 52676), affecting new source review in nonattainment areas, EPA changed its definition of potential emissions. The Missouri definition now appears to meet the condition promulgated by EPA.

The public is advised that the State has made a submission. EPA is reviewing the material to determine if it complies with the requirements of the Clean Air Act and the conditions promulgated by EPA. A notice of proposed rulemaking will be issued after EPA completes a review of the submission. EPA's conditional approval of the Missouri SIP is being continued until final action on the submittal is published in the **Federal Register.**

Dated: September 12, 1980.

David A. Wagoner,

Acting Regional Administrator.

[FR Doc. 80-29550 Filed 9-23-80; 8:45 am]

BILLING CODE 6560-01-M

FEDERAL MARITIME COMMISSION

46 CFR Parts 502, 512 and 531

[Domestic Circular Letter No. 1-79]

Bunker Surcharge in the Domestic Offshore Trades

AGENCY: Federal Maritime Commission.

ACTION: Revocation of temporary suspension of Parts 502, 512 and 531 of Title 46 CFR.

SUMMARY: The Federal Maritime Commission will no longer accept tariffs containing bunker surcharges which constitute general rate increases under section 2 of the Intercoastal Shipping Act, 1933, as amended (46 U.S.C. 844) on 30 days' notice.

EFFECTIVE DATE: September 30, 1980.

FOR FURTHER INFORMATION CONTACT: Francis C. Hurney, Secretary, Federal Maritime Commission, 1100 L St., N.W., Washington, D.C. 20573.

SUPPLEMENTARY INFORMATION: The Federal Maritime Commission, at its meeting on July 16, 1980, decided to allow Circular Letter No. 1-79, which established the bunker surcharge program effective June 6, 1979, to expire as scheduled on September 30, 1980, since the emergency conditions that existed in early 1979 when the program was established no longer exist.

With the expiration of Circular Letter No. 1-79, carriers wishing to file fuel related increases in their tariffs should be aware that all regulations in Parts 531, 512 and 502 of Title 46, Code of Federal Regulations, relating to rate increases are again in effect; i.e., the notice time for increases of three percent or more will revert back to 60 days and the financial justification as required by parts 512 and 502 would be necessary.

The Federal Maritime Commission intends to publish rules governing special permission applications for filing of surcharges on less than statutory notice in order to meet emergency conditions. The proposed rules will provide guidelines for determining whether or not an emergency warranting a surcharge exists. However, during the period between the expiration of Circular Letter No. 1-79 and the establishment of the new rules carriers may request special permission under 46 CFR section 531.18 to waive part or all of the requirements that they believe are necessary. Each special permission request will be judged on an individual basis.

Any carrier filing a bunker surcharge pursuant to Circular Letter No. 1-79 which is accepted by the Commission prior to September 30, 1980 will be permitted to file a single discrete general rate increase to incorporate the surcharge into the rate structure without further justification, provided that the price of bunker fuel has not decreased during the period of the surcharge and further provided, that such a general rate increase is strictly limited to those rates and charges to which the bunker surcharge had previously applied. Such general rate increase must be filed on 30 days notice.

PART 502—RULES OF PRACTICE AND PROCEDURE

§ 502.67 [Reinstated]

PARTS 512 AND 531—[AMENDED]

Therefore, it is ordered that the June 6, 1979, (44 FR 32370) temporary suspension of certain provisions of Parts 502, 512 and 531 of Title 46 CFR is revoked effective September 30, 1980.

By the Commission, September 17, 1980.

Joseph C. Polking,

Assistant Secretary.

[FR Doc. 80-29471 Filed 9-23-80; 8:45 am]

BILLING CODE 6730-01-M

FEDERAL COMMUNICATIONS COMMISSION

47 CFR Part 2

Editorial Order Correcting Footnote US110 to the Table of Frequency Allocations

AGENCY: Federal Communications Commission.

ACTION: Final rule (order).

SUMMARY: Amendment of footnote US110 to the Table of Frequency Allocations to correct an error.

EFFECTIVE DATE: September 26, 1980.

ADDRESSES: Federal Communications Commission, 1919 M Street, N.W., Washington, D.C. 20554.

FOR FURTHER INFORMATION CONTACT: Maureen Cesaitis, Office of Science and Technology, Washington, D.C. 20554, (202) 653-8165—Room 7310.

Order

Adopted: September 3, 1980.

Released: September 5, 1980.

In the matter of Amendment of Part 2 of the Commission's Rules and Regulations to correct footnote US110 to the Table of Frequency Allocations.

1. Footnote US110 to the Table of Frequency Allocations, Section 2.106 of the Commission's Rules and Regulations, specifies conditions under which the non-Government radiolocation service may operate in the bands 3100–3300 MHz, 3500–3700 MHz, 5250–5350 MHz, 8500–9000 MHz, 9200–9300 MHz, 9500–10,000 MHz, 13.4–14.0 GHz, 15.7–17.7 GHz, 24.05–24.25 GHz and 33.4–36 GHz. The footnote specifies that non-Government users shall provide protection to airborne surface detection equipment (ASDE) operating between 15.7 and 16.2 GHz. The equipment being protected is in fact located at airports, on the ground, and is not "airborne". Accordingly, footnote US110 is being corrected to read ". . . airport surface detection equipment (ASDE) . . .". (The full text of the footnote appears in the attached Appendix.) Because this amendment is editorial, compliance with the prior notice and effective date provisions of (5 USC 553) is unnecessary.

2. Accordingly, It is ordered that, effective September 26, 1980, Section 2.106 of the Rules is amended as set forth in the Appendix. Authority for this action is contained in Section 4(i) and 303 of the Communications Act of 1934, as amended, and pursuant to delegated authority. (§ 0.231(d))

(Secs. 4, 303, 307, 48 Stat., as amended, 1008, 1082, 1083; 47 U.S.C. 154, 303, 307)

Federal Communications Commission.

R. D. Lichtwardt,

Executive Director.

Appendix

Part 2 of Chapter I of Title 47 of the Code of Federal Regulations is amended as follows:

1. In § 2.106, footnote US110 is amended to read as follows:

§ 2.106 Table of Frequency allocations.

* * * * *

US110 in the frequency bands 3100–3300 MHz, 3500–3700 MHz, 5250–5350 MHz, 8500–9000 MHz, 9200–9300 MHz, 9500–10,000 MHz, 13.4–14.0 GHz, 15.7–17.7 GHz, 24.05–24.25 GHz and 33.4–36 GHz, the non-Government radiolocation service shall be secondary to the Government radiolocation service and to airborne doppler radars at 8800 MHz, and shall provide protection to airport surface detection equipment (ASDE) operating between 15.7–16.2 GHz.

[FR Doc. 80-29552 Filed 9-23-80; 8:45 am]

BILLING CODE 6712-01-M

47 CFR Part 73

[BC Docket No. 80-49; RM-3251]

FM Broadcast Station in Ackerman, Miss.; Changes Made in Table of Assignments; Proceeding Terminated

AGENCY: Federal Communications Commission.

ACTION: Report and order.

SUMMARY: Action taken herein assigns FM channel 300 to Ackerman, Mississippi, in response to a petition filed by H. Richard Cannon ("petitioner"). The proposed station would provide a first local aural broadcast service to Ackerman and first and second FM service to the surrounding area.

EFFECTIVE DATE: October 24, 1980.

ADDRESS: Federal Communications Commission, Washington, D.C. 20554.

FOR FURTHER INFORMATION CONTACT: Montrose H. Tyree, Broadcast Bureau, (202) 632-9660.

SUPPLEMENTARY INFORMATION:

Adopted: September 2, 1980.

Released: September 12, 1980.

In the matter of Amendment of § 73.202(b), Table of Assignments, FM Broadcast Stations (Ackerman, Mississippi).

By the Chief, Policy and Rules Division:

1. On February 6, 1980, the Commission adopted a *Notice of Proposed Rule Making,* 45 FR 12456 proposing the assignment of Channel 300 to Ackerman, Mississippi, as its first FM assignment, in response to a petition filed by H. Richard Cannon ("petitioner"). Supporting comments were filed in letters from citizens of Ackerman and from petitioner in which he reaffirmed his intent to file for the channel, if assigned. An opposition to the petition was filed by Louisville Broadcasting Company,[1] to which petitioner responded.

2. Ackerman (pop. 1,502),[2] seat of Choctaw County (pop. 8,440), is located approximately 147 kilometers (92 miles) northeast of Jackson, Mississippi. It has no local aural broadcast service.

3. Petitioner asserts that Ackerman is the largest city in Choctaw County, and its center for commerce, government and tourism. Petitioner restates its prior comments that a Class C assignment is justified because there are no communities with an FM station within 15 miles and service is needed to outlying and rural areas. He further states that the proposed station would provide first FM and nighttime aural service to 355 persons, second FM service to 19,606 persons and second nighttime aural service to 12,391 persons.

4. In opposition, Louisville Broadcasting Company, contends that petitioner has requested the assignment of Class C FM frequency to serve a community which could efficiently be served by a Class A frequency.

Since Ackerman is presently receiving service from various facilities and must locate its transmitter 16 miles northwest of the city, Louisville questions whether petitioner will primarily serve Ackerman, or for that matter locate its studio in Ackerman. Louisville has submitted a list of several Class A channels available for use in Ackerman.

5. In reply comments, petitioner cites the case of *Baxley, Sandersville and Sparta, Georgia,* Fed. Reg. 42RR 2d 249 (1978), wherein the Commission assigned a Class C channel to a community of approximately 3,503 persons, despite the availability of Class A channels. He states that locating the transmitter site northwest of Ackerman provides no basis, whatsoever, for Louisville's conclusion that the needs, problems and interest of Ackerman would not be served. Petitioner states that the demonstrated need for FM service to underserved areas is a sound basis for the proposed assignment.

6. We have carefully considered the record in this proceeding and find that it

[1] Louisville Broadcasting Company is licensee to Stations WSLM (AM) and WSLM-FM.

[2] Population figures are taken from the 1970 U.S. Census.

would be in the public interest to assign Channel 300 to Ackerman, Mississippi. The proposed station could render a first local aural broadcast service to Ackerman, in addition to providing first and second FM service to a substantial population in surrounding areas.

7. Accordingly, it is ordered, That effective October 24, 1980, the FM Table of Assignments (Section 73.202(b) of the Commission's Rules) is amended with regard to the following community:

City	Channel No.
Ackerman, Mississippi	300

8. Authority for the action taken herein is found in Sections 4(i), 5(d)(1), 303 (g) and (r) and 307(b) of the Communications Act of 1934, as amended, and Section 0.281 of the Commission's Rules.

9. It is further ordered, That this proceeding is terminated.

10. For further information concerning this proceeding, contact Montrose H. Tyree, Broadcast Bureau, (202) 632-9660.

(Secs. 4, 5, 303, 48 Stat., as amended, 1066, 1068, 1082; 47 U.S.C. 154, 155, 303)

Federal Communications Commission.

Henry L. Baumann,

Chief, Policy and Rules Division, Broadcast Bureau.

[FR Doc. 80-29544 Filed 9-23-80; 8:45 am]

BILLING CODE 6712-01-M

47 CFR Part 73

[BC Docket No. 80-47; RM-3260]

FM Broadcast Stations in Westover and Grafton, W. Va.; Petition for Rule Making Denied and Proceeding Terminated

AGENCY: Federal Communication Commission.

ACTION: Report and order.

SUMMARY: Action taken herein denies the petition of Craig L. Falkenstine which proposed the assignment of FM Channel 265A to Westover, West Virginia, and the substitution of Channel 240A for 265A at Grafton, West Virginia.

EFFECTIVE DATE: Non-applicable.

ADDRESSES: Federal Communications Commission, Washington, D.C. 20554.

FOR FURTHER INFORMATION CONTACT: Ira H. Smart or Mark N. Lipp, Broadcast Bureau, (202) 632-7792.

SUPPLEMENTARY INFORMATION:

In the matter of Amendment of § 73.202(b), Table of Assignments, FM Broadcast Stations. (Westover and Grafton, West Virginia).

Adopted: September 2, 1980.

Released: September 11, 1980.

By the Chief, Policy and Rules Division:

1. On December 6, 1978, public notice was given of a petition filed by Craig L. Falkenstine ("petitioner"), which proposed the assignment of FM Channel 265A to Westover, West Virginia, as a first FM assignment, and the substitution of Channel 240A for 265A at Grafton, West Virginia. Several letters supporting the proposal were attached to the petition. Conti Broadcasting, permittee of Channel 265A at Grafton, filed comments requesting reimbursement for the necessary changes in switching to a new channel. A timely opposition was filed by Freed Broadcasting Co. ("Freed"), licensee of Stations WCLG(AM) and WCLG(FM), Morgantown, West Virginia. Petitioner submitted a reply.

2. In our *Notice of Proposed Rule Making*, released February 15, 1980, we noted that a construction permit had been issued for Channel 265A to Conti Broadcasting, Inc. for Station WQIT-FM, and we stressed that in the event of a modification, Conti Broadcasting, Inc. would be entitled to reimbursement for the reasonable costs of conversion to the new channel in accordance with established Commission policy. See *Circleville, Ohio*, 8 F.C.C. 2d 159 (1967). Thus we noted that petitioner should indicate its willingness to reimburse Conti Broadcasting, Inc. in the event that petitioner is the ultimate permittee of the proposed Westover assignment. Petitioner has made no reference to this in its comments in support of the *Notice of Proposed Rule Making* or its reply to the opposition to the *Notice of Proposed Rule Making*. Therefore the proposal will not be adopted. Alternatively, petitioner may wish to search for a different Class A channel which does not affect an occupied channel and submit a new petition which we would consider without prejudice. This denial is not intended to reflect on the needs of Westover for a first local aural service. In that regard the opposition to the proposed Westover station has not been considered.

3. In view of the foregoing, it is ordered, That the petition of Craig L. Falkenstine, requesting the assignment of FM Channel 265A to Westover, West Virginia, as a first FM assignment, and the substitution of Channel 240A for 265A at Grafton, West Virginia, is hereby denied.

Federal Communications Commission.

Henry L. Baumann,

Chief, Policy and Rules Division Broadcast Bureau.

[FR Doc. 80-29542 Filed 9-23-80; 8:45 am]

BILLING CODE 6712-01-M

47 CFR Part 81

[PR Docket No. 79-68; RM-3127; FCC 80-515]

Specifying the Circumstances Under Which Class III-B Public Coast Stations May Be Exempted From the Watch Requirements on 156.8 MHz; Proceeding Terminated

AGENCY: Federal Communications Commission.

ACTION: Final rule.

SUMMARY: Amendment of Part 81 of the Commissions Rules to specify the circumstances under which Class III-B public coast stations may be exempted from the channel 16 watch requirement. This action was prompted by a petition for rulemaking. The effect of this action is to exempt most public coast stations from maintaining a safety watch on channel 16.

EFFECTIVE DATE: October 27, 1980.

ADDRESSES: Federal Communications Commission, Washington, D.C. 20554.

FOR FURTHER INFORMATION CONTACT: Roy Carleton Howell, Private Radio Bureau, (202) 632-7175.

SUPPLEMENTARY INFORMATION:

In the matter of Amendment of Part 81 of the Commission's rules to specify the circumstances under which Class III-B public coast stations may be exempted from the watch requirements on 156.8 MHz. 44 FR 59581.

Adopted: September 10, 1980.

Released: September 22, 1980.

By the Commission:

Background

1. On March 30, 1979, the Commission adopted a Notice of Proposed Rule Making (NPRM) proposing to amend the rules to specify the circumstances under which Class III-B public coast stations may be exempted from the listening watch requirement set forth in Section 81.191(c)(3) of the maritime mobile service rules. Section 81.191(c)(3) essentially requires coast stations operating within 156-162 MHz to maintain an efficient listening watch on the distress, safety and calling frequency 156.8 MHz. An NPRM was published at 44 Fed. Reg. 2183 on April 12, 1979, and subsequently reopened for reply comments by a notice released

October 10, 1979 at 44 Fed. Reg. 59581. The Commission received numerous comments in response to its Notice.

2. Public coast stations are land stations in the maritime mobile service, which are open to public correspondence, and render a common carrier service. These stations transmit messages to and receive messages from ships at sea, for a fee set in accordance with tariffs on file with the Commission.

3. The frequency 156.8 MHz is the distress, safety and calling frequency in the VHF maritime mobile service. As a calling frequency, 156.8 MHz is the frequency on which contact can be made with other maritime stations. After contact is made, the operators shift to a working frequency. Although this operating procedure is permitted in communications with public coast stations, contact between ship stations and public coast stations is made, whenever practicable, directly on the appropriate ship-shore working frequency to reduce unnecessary communications on 156.8 MHz. The frequency 156.8 MHz is also the frequency on which distress, urgency and safety messages are transmitted. Designation of the distress frequency as the calling frequency ensures that a maximum number of stations will be listening at any given time.

4. Section 81.191(c)(3) of the Commission's rules requires a public coast station licensed to transmit by telephony on one or more frequencies within the band 156–162 MHz, during its hours of service for telephony, to maintain an efficient watch on the frequency 156.8 MHz whenever the station is not transmitting on that frequency. The Commission, however, may exempt any coast station from compliance with this watch requirement if it considers that the circumstances relative to the operation or location of the coast station are such as to render this requirement unreasonable or unnecessary. In this Report and Order we are amending the rules to specify the circumstances under which the Commission will exempt public coast stations from the watch requirement.

Summary of the Decision

5. The rules we have adopted will exempt from the channel 16 watch all public coast stations located on the coasts of the United States serving vessels on the open sea, and stations serving the Great Lakes. The rules will permit us to exempt coast stations serving lakes, rivers and bays if the licensee shows that the watch on 156.8 MHz is provided over 95 percent of its service area by a government station or stations. This ensures there will be a watch on 156.8 MHz for safety and distress purposes over nearly all of the coverage area of the exempt inland water coast station. Moreover, the inland water coast station will have to have the capability to transmit and receive on 156.8 MHz so it can respond to calls, and to call ship stations watching 156.8 MHz. Additionally, if the government station providing the 156.8 MHz watch temporarily discontinues that watch because of operational difficulties, the exempt inland water public coast station will be required, upon receiving notice of this condition, to maintain the watch on 156.8 MHz during the down period.

Discussion of the Comments

6. Comments were filed by various organizations. The thrust of the comments favored the Commission's proposal. The USCG stated that, where it provides service, watch by public coast stations has not contributed significantly to the effectiveness of the distress system, as measured by search and rescue alerts from public coast stations. Hence, the USCG agrees with the Commission, that, if there is "substantial" coverage by government stations on 156.8 MHz in the area of coverage of a public coast station, the coverage provided by the coast station is unnecessary.

7. The USCG recommended three changes: First, all public coast stations not located on inland waters be exempt from the channel 16 watch requirement. Second, in the interest of safety, the USCG recommended that there be a high degree of duplication of service and that it be defined as greater than 95% before an exemption is granted any inland water public coast station. Third, the USCG recommended that all licensees applying for an exemption be required to submit coverage contours of the Government station providing the duplicate coverage as well as for their own coast station.

8. The Commission understands that the USCG will accept responsibility for maintaining the watch for the open seas. However, the USCG is not ready to accept this responsibility for inland lakes, rivers and bays. Based on the position of the USCG, we are adopting the channel 16 watch exemption for all public coast stations located on the coasts of the United States serving vessels on the open seas. Also, we are adopting the 95% standard for inland public coast stations rather than the "substantial" standard as proposed. We are adopting the USCG's position in order to release stations serving the open seas from the economic burden of maintaining an unwarranted and unnecessary function.[1] Also, to ensure uniformity of computation of coverage by those inland public coast stations applying for the exemption, the licensee will be required to submit coverage contours (in accordance with Subpart R of Part 81 of the Commission's Rules) for both its station and that of the Government station or stations providing the duplicate coverage.

9. We are affording USCG recommendations great weight because Congress has vested general jurisdiction for maritime safety in the USCG pursuant to 14 U.S.C. 2. The USCG has developed a communications system which provides distress coverage on channel 16 for the coastline of the contiguous forty-eight States and in significant commercial traffic areas of many inland waters. However, there are a number of inland waters where the USCG does not plan to provide coverage. Safety coverage in these areas may or may not be provided by local government jurisdictions. Inland public coast stations will have the burden of providing 95% coverage duplication by the USCG or some local government station before an exemption under Commission rules will be granted from the watch.

10. The American Telephone and Telegraph Company (AT&T), the Lake Carriers Association (LCA), the Marine Telephone Operators Association (MTOA), and the Lorain Electronics Corporation (LORAN) support the rulemaking in its entirety.

11. AT&T argues that the coverage areas of most of these stations are essentially duplicated by those of the United States Government stations; and, the present rule which requires public coast stations to maintain a 156.8 MHz watch represents a duplication of effort which is ultimately an economic burden on maritime mobile service subscribers.

12. LCA argues that on the Great Lakes, the United States Coast Guard stations already maintain a continuous listening watch on 156.8 MHz and provide coverage substantially over the same service area served by the coast stations, and participants in the automated maritime communications system. Furthermore, in the event the government station temporarily discontinues the watch, the proposed amendment to § 81.191(c)(3) makes provision for the exempt public coast station to assume the watch. This added assurance of continuous surveillance, in addition to that maintained by vessels, should be adequate to meet safety

[1] See, the December 1979 FCC Report to Congress, *A Study of Maritime Public Coast Station Operations, Services and Industry*, at p. 17.

objectives, without incurring the economic burden of installing additional facilities.

13. The Waterway Communications System, Inc. (WATERCOM) asserts that Congress, pursuant to 14 U.S.C. 2, conferred jurisdiction for maritime safety upon the USCG, and not the Commission. True enough, 14 U.S.C. 2 does confer jurisdiction over maritime safety matters upon the USCG. Nevertheless, Congress concurrently vested jurisdiction in the Commission for:

> The purpose of promoting safety of life and property through the use of wire and radio communication.

Additionally, the International Telecommunications Union (ITU) Radio Regulation No. 1364,[2] and the Communications Act § 1 and § 303(r)[3] provide authority to require applicants, seeking to provide coast station service, to maintain a listening watch on the national and international distress, safety and calling frequency in the marine VHF band. Therefore, in view of the foregoing, the Commission finds that the subject watch requirement is well within its authority under the ITU Radio Regulations, and the Communications Act.[4]

14. Toledo Marine Telephone (TMT) supported the rulemaking but requested that all Class III–B public coast stations on the Great Lakes be given a permanent exemption from the watch requirement on 156.8 MHz. In the NPRM, the Commission temporarily waived the watch requirement for public coast stations on the Great Lakes pending final action in this proceeding, insofar as stations in the Great Lakes area met criteria for exemption in the original proposal. The Commission has adopted TMT's recommendation, and all Class III–B public coast stations on the Great Lakes are exempt from the watch requirement on 156.8 MHz. The USCG does provide sufficient distress coverage on channel 16 for the Great Lakes because of the significant commerical traffic in this area.

15. The Marine Telephone Company (MTC) supported the rulemaking but argued that the proposed rule was more restrictive than the original version, which permitted the Commission to exempt any public coast station from 156.8 MHz watch only:

> If it considers that the circumstances relative to the operation or location of the involved station are such as to render this requirement unreasonable or unnecessary for the purpose of this paragraph.

MTC asserts that the amended rule should provide more flexibility "so that the Commission will still be in a position to exercise a degree of judgment in entertaining requests for exemptions without having to formally waive the rule requirement in those cases where circumstances clearly support an exemption from the 'watch' requirements." MTC further contends that a public coast III–B station which does not offer service to the public on a continuous twenty-four hour basis, should not be precluded from obtaining an exemption from the Channel 16 "watch" simply because the local USCG station also operates on a less than twenty-four hour basis. The proposed rule would probably allow for an exemption in the hypothetical situation described by MTC insofar as the government station does not have continuous twenty-four hours of service in this example. The Commission is not going to require a greater standard of licensees, than that standard maintained by the USCG.

Conclusion

16. The Commission finds that the attached amendments to the Rules and Regulations are necessary and proper for the best interest of the Maritime Service. Authority for adoption of this amendment is contained in Sections 4(i) and 303 of the Communications Act of 1934, as amended, and in Regulation 1364 of the ITU Radio Regulations.

17. Accordingly, IT IS ORDERED, That effective October 27, 1980, Section 81.191(c)(3) of the Commission's Rules and Regulations IS AMENDED as set forth in the attached Appendix.

18. Furthermore, it is ordered, That this proceeding is terminated.

19. For further information concerning this rulemaking, contact Roy Carleton Howell, Rules Division, Private Radio Bureau, Federal Communications Commission, Washington, D.C. 20554, (202) 632–7175.

(Secs. 4, 303, 48 Stat., as amended, 1066, 1082; 47 U.S.C. 154, 303)

Federal Communications Commission.

William J. Tricarico,

Secretary.

Appendix

Part 81 of Chapter I of Title 47 of the Code of Federal Regulations is amended as follows:

Section 81.191(c)(3) is amended to read as follows:

§ 81.191 Radiotelephone watch by coast stations.

* * * * *

(c) * * *

(3) All public coast stations not serving inland lakes, rivers and bays (i.e. inland waters) shall be exempt from the channel 16 watch requirement. However, each public coast station located on inland waters (exclusive of the Great Lakes which are exempt) (licensed to transmit by telephony on one or more frequencies within the band 156–162 MHz shall, during its hours of service for telephony, maintain an efficient watch for the reception of Class F3 emission on the frequency 156.800 MHz whenever such station is not being used for transmission on that frequency. The Commission shall exempt any inland water public coast station from compliance with this requirement when it has been demonstrated that an efficient watch on 156.800 MHz is maintained over 95% of the coast station's service area by federal, state or local government stations. Such a request for an exemption will include a chart showing the receiving service area of the inland water public coast station by the method specified in Subpart R of this part of the rules. The location by coordinates, to the nearest minute, and the receiving service area of the government station maintaining the continuous watch on 156.800 MHz will be indicated on the same chart. The receiving service area of these stations shall be calculated using criteria specified in Subpart R of this part of the rules. Where the station(s) providing the 156.800 MHz watch over the service area of an exempt station temporarily discontinues that watch, the exempt public coast station upon receiving notice of this condition shall maintain the watch on 156.800 MHz during the down period. However, in the case of automated maritime communications systems, compliance with this "back-up" watch requirement shall only require the use of existing facilities, when not otherwise being utilized, and shall not

---

[2] "A coast station providing an international maritime mobile radiotelephone service in the band 156–174 MHz and which forms an essential part of the coverage of the area for distress purposes should, during its working hours in that band, maintain an efficient aural watch on 156.8 MHz."

[3] "Make such rules and regulations and prescribe such restrictions and conditions, not inconsistent with law, as may be necessary to carry out the provisions of this Act, or any international radio or wire communications treaty or convention, or regulations annexed thereto, including any treaty or convention insofar as it relates to the use of radio, to which the United States is or may hereafter become a party."

[4] Although the ITU Radio Regulation No. 1364 says "should maintain an efficient aural watch" rather than "shall", this precatory language clearly corresponds with one of the purposes delineated in Section 1 of the Communications Act (i.e.," . . . promoting safety of life and property through the use of wire and radio communication . . .").

be construed as necessitating additional equipment or circuits.

* * * * *

[FR Doc. 80-29553 Filed 9-23-80; 8:45 am]

BILLING CODE 6712-01-M

INTERSTATE COMMERCE COMMISSION

49 CFR Part 1033

[Service Order No. 1485]

Louisville & Nashville Railroad Co. Authorized To Operate Over Tracks of Illinois Central Gulf Railroad Co.

AGENCY: Interstate Commerce Commission.

ACTION: Service Order No. 1485.

SUMMARY: This order authorizes the Louisville and Nashville Railroad Company to operate over tracks of the Illinois Central Gulf at Owensboro, Kentucky, due to a track embargo which deprives customers at Owensboro of essential rail service.

EFFECTIVE DATE: 12:01 a.m., September 20, 1980, and continuing in effect until 11:59 p.m., December 15, 1980.

FOR FURTHER INFORMATION CONTACT: M. F. Clemens, Jr. (202) 275-7840.

SUPPLEMENTARY INFORMATION:

Decided: September 18, 1980.

The line of the Illinois Central Gulf Railroad Company (ICG) between Fordsville and Owensboro, Kentucky, has deteriorated and is inoperable, and has been placed under embargo. The Louisville and Nashville Railroad Company (L&N) has requested authority to serve ICG industries in Owensboro, Kentucky, via its interchange with the ICG. The ICG has consented to use of its tracks in Owensboro.

It is the opinion of the Commission that an emergency exists requiring operation of L&N trains over these tracks of the ICG in the interest of the public; that notice and public procedure are impracticable and contrary to the public interest; and that good cause exists for making this order effective upon less than thirty days' notice.

It is ordered,

§ 1033.1485 Service Order No. 1485.

(a) *Louisville and Nashville Railroad Company authorized to operate over tracks of Illinois Central Gulf Railroad Company.* The Louisville and Nashville Railroad Company (L&N) is authorized to operate over tracks of the Illinois Central Gulf Railroad Company (ICG) at Owensboro, Kentucky, between mileposts 40.05 and 40.63, a distance of approximately 3,043 feet.

(b) *Application.* The provisions of this order shall apply to intrastate, interstate and foreign traffic.

(c) *Rates applicable.* Since this operation by L&N over tracks previously operated by ICG is deemed to be due to carrier's disability, the rates applicable to traffic moved over these lines shall be the rates applicable to traffic routed to, from, or via these lines which were formerly in effect on such traffic when routed via ICG.

(d) *Effective date.* This order shall become effective at 12:01 a.m., September 20, 1980.

(e) *Expiration date.* The provisions of this order shall expire at 11:59 p.m., December 15, 1980, unless otherwise modified, amended or vacated by order of this Commission.

This action is taken under the authority of 49 U.S.C. 10304-10305 and 11121-11126.

This order shall be served upon the Association of American Railroads, Car Service Division, as agent of the railroads subscribing to the car service and car hire agreement under the terms of that agreement and upon the American Short Line Railroad Association. Notice of this order shall be given to the general public by depositing a copy in the Office of the Secretary of the Commission at Washington, D.C., and by filing a copy with the Director, Office of the Federal Register.

By the Commission, Railroad Service Board, members Joel E. Burns, Robert S. Turkington and John H. O'Brien.

Agatha L. Mergenovich,

Secretary.

[FR Doc. 80-29501 Filed 9-23-80; 8:45 am]

BILLING CODE 7035-01-M

49 CFR Part 1033

[Ninth Revised Service Order No. 1473]

Various Railroads Authorized To Use Tracks and/or Facilities of the Chicago, Rock Island & Pacific Railroad Co., Debtor (William M. Gibbons, Trustee)

AGENCY: Interstate Commerce Commission.

ACTION: Ninth revised service order No. 1473.

SUMMARY: Pursuant to Section 122 of the Rock Island Transition and Employee Assistance Act, Pub. L. 96-254, this order authorizes various railroads to provide interim service over Chicago, Rock Island and Pacific Railroad Company, Debtor (William M. Gibbons, Trustee), and to use such tracks and facilities as are necessary for operations. This order permits carriers to continue to provide service to shippers which would otherwise be deprived of essential rail transportation.

EFFECTIVE DATE: 12:01 a.m., September 22, 1980, and continuing in effect until 11:59 p.m., November 30, 1980, unless otherwise modified, amended or vacated by order of this Commission.

FOR FURTHER INFORMATION CONTACT: M. F. Clemens, Jr. (202) 275-7840.

SUPPLEMENTARY INFORMATION:

Decided: September 17, 1980.

Pursuant to Section 122 of the Rock Island Transition and Employee Assistance Act, Pub. L. 96-254, the Commission is authorizing various railroads to provide interim service over Chicago, Rock Island and Pacific Railroad Company, Debtor, (William M. Gibbons, Trustee), (RI) and to use such tracks and facilities as are necessary for that operation.

In view of the urgent need for continued service over RI's lines pending the implementation of long-range solutions, this order permits carriers to continue to provide service to shippers which would otherwise be deprived of essential rail transportation.

Ninth Revised Service Order No. 1473, modifies Appendix A, of the previous order by granting additional authority to the Union Pacific Railroad Company (UP) in Item 3, C. Limon, Colorado; to the Davenport, Rock Island and North Western Railway Company (DRI) in Item 9, F. between Wilton and Iowa City, Iowa, and to the Cedar Rapids and Iowa City Railway Company (CIC), in Item 23, A. in or near Iowa City, Iowa. The authority for the Fort Worth and Denver Railway Company (FWD), in Item 6, A. between Groom and Adrian, Texas, is deleted as requested, and lines B and C become A and B.

It is the opinion of the Commission that an emergency exists requiring that the railroads listed in the attached appendix be authorized to conduct operations, also identified in the attachment, using RI tracks and/or facilities; that notice and public procedure are impracticable and contrary to the public interest; and good cause exists for making this order effective upon less than thirty days' notice.

It is ordered,

§ 1033.1473 Service Order No. 1473.

(a) *Various railroads authorized to use tracks and/or facilities of the Chicago, Rock Island and Pacific Railroad Company, Debtor, (William M. Gibbons, Trustee).* Various railroads are authorized to use tracks and/or facilities of the Chicago, Rock Island and Pacific Railroad Company (RI), as listed in

Appendix A to this order, in order to provide interim service over the RI.

(b) The Trustee shall permit the affected carriers to enter upon the property of the RI to conduct service essential to these interim operations.

(c) The Trustee will be compensated on terms established between the Trustee and the affected carrier(s); or upon failure of the parties to agree as hereafter fixed by the Commission in accordance with pertinent authority conferred upon it by Section 122(a) Public Law 96–254.

1. The authority contained in Item 5(E) of Appendix A of this order, previously operated by the Union Pacific Railroad Company (UP) between Colby and Caruso, Kansas (milepost 387.8 to 429.3), is conditioned upon the assumption by Burlington Northern, Inc. (BN) of the negotiated agreement between UP and the Rock Island Trustee with regard to the compensation to be paid the Trustee for that line segment until a new agreement is reached between the Trustee and the BN.

(d) Interim operators authorized in Appendix A to this order, shall, within fifteen (15) days of its effective date, notify the Railroad Service Board of the date on which interim operations were commenced or the expected commencement date of those operations.

(e) Interim operators, authorized in Appendix A to this order, shall, within thirty days of commencing operations under authority of this order, notify the RI Trustee of those facilities they believe are necessary or reasonably related to the authorized operations.

(f) During the period of these operations over the RI lines, interim operators shall be responsible for preserving the value of the lines, associated with each interim operation, to the RI estate, and for performing necessary maintenance to avoid undue deterioration of lines and associated facilities.

(g) Any operational or other difficulty associated with the authorized operations shall be resolved through agreement between the affected parties or, failing agreement, by the Commission's Railroad Service Board.

(h) Any rehabilitation, operational, or other costs related to the authorized operations shall be the sole responsiblity of the interim operator incurring the costs, and shall not in any way be deemed a liability of the United States Government.

(i) *Application.* The provisions of this order shall apply to intrastate, interstate and foreign traffic.

(j) *Rate applicable.* Inasmuch as this operation by interim operators over tracks previously operated by the RI is deemed to be due to carrier's disability, the rates applicable to traffic moved over these lines shall be the rates applicable to traffic routed to, from, or via these lines which were formerly in effect on such traffic when routed via RI, until tariffs naming rates and routes specifically applicable become effective.

The operator under this temporary authority will not be required to protect transit rate obligations incurred by the RI or the directed carrier, Kansas City Terminal Railway Company, on transit balances currently held in storage.

(k) In transporting traffic over these lines, all interim operators involved shall proceed even through no contracts, agreements, or arrangements now exist between them with reference to the divisions of the rates of transportation applicable to that traffic. Divisions shall be, during the time this order remains in force, those voluntarily agreed upon by and between the carriers; or upon failure of the carriers to so agree, the divisions shall be those hereafter fixed by the Commission in accordance with pertinent authority conferred upon it by the Interstate Commerce Act.

(l) In providing service under this order interim operators, to the maximum extent practicable, shall use the employees who normally would have performed work in connection with the traffic moving over the lines subject to this Order.

(m) *Effective date.* This order shall become effective at 12:01 a.m., September 22, 1980.

(n) *Expiration date.* The provisions of this order shall expire at 11:59 p.m., November 30, 1980, unless otherwise modified, amended, or vacated by order of this Commission.

This action is taken under the authority of 49 U.S.C. 10304–10305 and Section 122, Public Law 96–254.

This order shall be served upon the Association of American Railroads, Car Service Division, as agent of the railroads subscribing to the car service and can hire agreement under the terms of that agreement and upon the American Short Line Railroad Association. Notice of this order shall be given to the general public by depositing a copy in the Office of the Secretary of the Commission at Washington, D.C., and by filing a copy with the Director, Office of the Federal Register.

By the Commission Railroad Service Board, members Joel E. Burns, Robert S. Turkington and John H. O'Brien.

Agatha L. Mergenovich,

Secretary.

Appendix A—RI Lines Authorized To Be Operated by Interim Operators

1. *Louisiana and Arkansas Railway Company (L&A):*
   A. Tracks one through six of the Chicago, Rock Island and Pacific Railroad Company's (RI) Cadiz yard in Dallas, Texas, commencing at the point of connection of RI track six with the tracks of the Atchision, Topeka and Santa Fe Railway Company (ATSF) in the southwest quadrant of the crossing of the ATSF and the Missouri-Kansas-Texas Railroad Company (MKT) at interlocking station No. 19.
2. *Peoria and Pekin Union Railway Company (P&PU):* All Peoria Terminial Railroad property on the east side of Illinois River, located within the city limits of Pekin, Illinois.
3. *Union Pacific Railroad Company (UP):*
   A. Beatrice, Nebraska.
   B. Approximately 36.5 miles of trackage extending from Fairbury, Nebraska, to RI Milepost 581.5 north of Hallam, Nebraska.
   **C. Limon, Colorado.
4. *Toledo, Peoria and Western Railroad Company (TP&W):*
   A. Keokuk, Iowa.
   B. Peoria Terminal Company trackage from Hollis to Iowa Junction, Illinois.
5. *Burlington Northern, Inc. (BN):*
   A. Burlington, Iowa (milepost 0 to milepost 2.06).
   B. Fairfield, Iowa (milepost 275.2 to milepost 274.7).
   C. Henry, Illinois (milepost 126) to Peoria, Illinois (milepost 164.35) including the Keller Branch (milepost 1.55 to 8.62).
   D. Phillipsburg, Kansas (milepost 282) to CBQ Junction, Kansas (milepost 325.9).
   E. CBQ Junction, Kansas (milepost 325.9) to Seibert, Colorado (milepost 487).
6. *Fort Worth and Denver Railway Company (FW&D):*
   *A. Terminal trackage at Amarillo, Texas, including approximately (3) three miles northerly along the old Liberal Line, and at Bushland, Texas.
   *B. North Fort Worth, Texas (milepost 603.0 to milepost 611.4).
7. *Chicago and North Western Transportation Company (C&NW):*
   A. from Minneapolis-St. Paul, Minnesota, to Kansas City, Missouri.
   B. from Rock Junction (milepost 5.2) to Inver Grove, Minnesota (milepost 0).
   C. from Inver Grove (milepost 344.7) to Northwood, Minnesota.
   D. from Clear Lake Junction (milepost 191.1) to Short Line Junction, Iowa (milepost 73.6).
   E. from Short Line Junction Yard (milepost 354) to West Des Moines, Iowa (milepost 364).

F. from Short Line Junction (milepost 73.6) to Carlisle, Iowa (milepost 64.7).
G. from Carlisle (milepost 64.7) to Allerton, Iowa (milepost 0).
H. from Allerton, Iowa (milepost 363) to Trenton, Missouri (milepost 502.2).
I. from Trenton (milepost 415.9) to Air Line Junction, Missouri (milepost 502.2).
J. from Iowa Falls (milepost 97.4) to Esterville, Iowa (milepost 206.9).
K. from Rake (milepost 50.7) to Ocheyedan, Iowa (milepost 502).
L. from Palmer (milepost 454.5) to Royal, Iowa (milepost 502).
M. from Dows (milepost 113.4) to Forest City, Iowa (milepost 158.2).
N. from Cedar Rapids (milepost 100.5) to Cedar River Bridge, Iowa (milepost 96.2) and to serve all industry formerly served by the RI at Cedar Rapids.
O. from Newton (milepost 320.5) to Earlham, Iowa (milepost 388.6).
P. Sibley, Iowa.
Q. Worthington, Minnesota.
R. Altoona to Pella, Iowa.
S. Carlisle, Indianola, Iowa.
T. Omaha, Nebraska, (between milepost 502 to milepost 504).
U. Earlham, (milepost 388.6) to Dexter, Iowa (milepost 393.5).

8. *Chicago, Milwaukee, St. Paul and Pacific Railroad Company (Milwaukee):*
A. from West Davenport, through and including Muscatine, to Fruitland, Iowa, including the Iowa-Illinois Gas and Electric Company near Fruitland.
B. Seymour, Iowa.
C. Washington, Iowa.
D. from Newport, to a point near the east bank of the Mississippi River, sufficient to serve Northwest Oil Refinery, at St. Paul Park, Minnesota.

9. *Davenport, Rock Island and North Western Railway Company (DRI):*
A. Davenport, Iowa.
B. Moline, Illinois.
C. Rock Island, Illinois, including 26th Street yard.
D. from Rock Island through Milan, Illinois, to a point west of Milan sufficient to include service to the Rock Island Industrial complex.
E. from East Moline to Silvis, Illinois.
*F. from Davenport to Iowa City, Iowa.
G. from Rock Island, Illinois, to Davenport, Iowa, sufficient to include service to Rock Island arsenal.

10. *Illinois Central Gulf Railroad Company (ICG):* Ruston, Louisiana

11. *St. Louis Southwestern Railway Company (SSW):* operating the Tucumcari Line from Santa Rosa, NM, to St. Louis, MO (via Kansas City, KS/MO), a total distance of 965.2 miles. The line also includes the RI branch line from Bucklin to Dodge City, KS, a distance of 26.5 miles, and North Topeka, KS. Also between Brinkley and Briark, Arkansas, and at Stuttgart, Arkansas.

12. *Little Rock & Western Railway Company:* from Little Rock, Arkansas (milepost 135.2) to Perry, Arkansas (milepost 184.2); and from Little Rock (milepost 136.4) to the Missouri Pacific/RI Interchange (milepost 130.6).

13. *Missouri Pacific Railroad Company:* from Little Rock, Arkansas (milepost 135.2) to Hazen, Arkansas (milepost 91.5); Little Rock, Arkansas (milepost 135.2) to Pulaski, Arkansas (milepost 141.0; Hot Springs Junction (milepost 0.0) to and including Rock Island milepost 4.7.

14. *Missouri-Kansas-Texas Railroad Company/Oklahoma, Kansas and Texas Railroad Company:*
A. Herington-Ft. Worth Line of Rock Island: beginning at milepost 171.7 within the City of Herington, Kansas, and extending for a distance of 439.5 miles to milepost 613.5 within the City of Ft. Worth, Texas, and use of Forth Worth and Denver trackage between Purina Junction and Tower 55 in Ft. Worth
B. Ft. Worth-Dallas Line of Rock Island: beginning at milepost 611.9 within the City of Ft. Worth, Texas, and extending for a distance of 34 miles of milepost 646, within the City of Dallas, Texas
C. El Reno-Oklahoma City Line of Rock Island: beginning at milepost 513.3 within the City of El Reno, Oklahoma, and extending for a distance of 16.9 miles to milepost 496.4 within the City of Oklahoma City, Oklahoma
D. Salina Branch Line of Rock Island: beginning at milepost 171.4 within the City of Herington, Kansas, and extending for a distance of 27.4 miles to milepost 198.8 in the City of Abilene, Kansas, including RI trackage rights over the line of the Union Pacific Railroad Company to Salina, (including yard tracks) Kansas
E. Right to use joint with other authorized carriers the Herington-Topeka Line of Rock Island: beginning at milepost 171.7 within the City of Herington, Kansas, and extending for a distance of 81.6 miles to milepost 89.9 within the City of Topeka, Kansas, as bridge rights only
F. Rock Island rights of use on the Wichita Union Terminal Railway Company and the Wichita Terminal Association, all located in Wichita, Kansas.
G. Rock Island right to use interchange tracks to interchange with the Great Southwest Railroad Company located in Grand Prairie, Texas.
H. The Atchison Branch from Topeka, at milepost 90.5, to Atchison, Kansas, at milepost 519.4 via St. Joseph, Missouri, at mileposts 0.0 and 498.3, including the use of interchange and yard facilities at Topeka, St. Joseph and Atchison, and the trackage rights used by the Rock Island to form a continuous service route, a distance of 111.6 miles.
I. The Ponca City Line at approximately milepost 26.1 at Billings, Oklahoma, to North Enid, Oklahoma, at milepost 339.5 on the Southern Division main line, a distance of 26.1 miles.
J. That part of the Mangum Branch Line from Chickasha, milepost 0.0 to Anadarko at milepost 18, thence south on the Anadarko Line at milepost 460.5 to milepost 485.3 at Richards Spur, a distance of 42.8 miles.
K. Oklahoma City-McAlester Line of Rock Island: Beginning at milepost 496.4 within the City of Oklahoma City, Oklahoma, and extending for a distance of 131.4 miles to milepost 365.0 within the City of McAlester, Oklahoma.

15. *El Dorado and Wesson Railroad Company:* from El Dorado to Catesville, Arkansas, a distance of 8 miles, in order to serve the Velsicol Plant.

16. *The Denver and Rio Grande Western Railroad Company:*
A. from Colorado Springs (milepost 609.1) to and including all rail facilities at Colorado Springs and Roswell, Colorado, (milepost 602.8), all in the vicinity of Colorado Springs, Colorado.

17. *Norfolk and Western Railway Company:* is authorized to operate over tracks of the Chicago, Rock Island and Pacific Railroad Company running southerly from Pullman Junction, Chicago, Illinois, along the western shore of Lake Calumet approximately four plus miles to the point, approximately 2,500 feet beyond the railroad bridge over the Calumet Expressway, at which point the RI track connects to Chicago Regional Port District track; and running easterly from Pullman Junction approximately 1,000 feet into the lead to Clear-View Plastics, Inc., for the purpose of serving industries located adjacent to such tracks and connecting to the Chicago Regional Port District. Any trackage rights arrangements which existed between the Chicago, Rock Island and Pacific Railroad Company and other carrier, and which extend to the Chicago Regional Port District Lake Calumet Harbor, West Side, will be continued so that shippers at the port can have NW rates and routes regardless of which carrier performs switching services.

18. *St Louis-San Francisco Railway Co.:*
A. AT Okeene, Oklahoma.
B. At Lawton, Oklahoma.

19. *Southern Railway Company:*
A. At Memphis, Tennessee.

20. *Cadillac and Lake City Railroad:*
A. From Sandown Junction (milepost 0.1) to and including junction with DRGW Belt Line (milepost 3.9) all in the vicinity of Denver, Colorado.

21. *Baltimore and Ohio Railroad Company:*
A. From Blue Island, Illinois (milepost 15.7) to Bureau, Illinois (milepost 114.2), a distance of 98.5 miles.

22. *Louisiana Midland Railway Company:*
A. From Hodge, Louisiana (milepost 173.3) to Alexandria, Louisiana (milepost 247.8), which includes assumption of RI's trackage rights over the Louisiana and Arkansas Railway Company between Winnfield, Louisiana, and Alexandria, Lousiana, and the RI's track and yard in Alexandria, Louisiana.

†† *Cedar Rapids and Iowa City Railway Company (CIC):*
A. From the west intersection of Lafayette Street and South Capitol Street, Iowa City, Iowa, southward for approximately 2.2 miles, terminating at the intersection of the RI tracks and the southern line of Section 21, Township 79 North, Range 6 West, Johnson County, Iowa, including spurs of the main trackage to serve various industry; and to effect interchange with the Davenport, Rock

* Changed.
†† Added.

Island and North Western Railway Company.

[FR Doc. 80-29563 Filed 9-23-80; 8:45 am]

BILLING CODE 7035-01-M

DEPARTMENT OF COMMERCE

National Oceanic and Atmospheric Administration

50 CFR Part 674

High Seas Salmon Emergency Regulations

AGENCY: National Oceanic and Atmospheric Administration (NOAA)/ Commerce.

ACTION: Field order/emergency regulations.

SUMMARY: The Director, Alaska Region (Regional Director), National Marine Fisheries Service (NMFS), issues emergency regulations (Field Order) applicable to fishing by vessels of the United States in the Alaska salmon troll fishery, in accordance with the fishery management plan (FMP) for the "High Seas Salmon Fishery Off the Coast of Alaska East of 175 East Longitude" and the final regulations implementing the FMP (45 FR 59172).

This field order closes the East Management Area to all commercial fishing for salmon beginning at 12:01 a.m., Pacific Daylight Time (PDT) on Sunday, September 21, 1980, unless superseded by a subsequent Field Order.

EFFECTIVE DATE: 12:01 a.m. PDT, Sunday, September 21, 1980. Public comments are invited until November 20, 1980.

ADDRESS: Comments may be sent to: Robert W. McVey, Director, Alaska Region, National Marine Fisheries Service, P.O. Box 1668, Juneau, Alaska 99802, Telephone (907) 586-7221.

FOR FURTHER INFORMATION CONTACT: William L. Robinson at the above address.

SUPPLEMENTARY INFORMATION: The FMP (44 FR 33250) establishes the optimum yield for chinook salmon in the East Management Area of the fishery conservation zone (FCZ) as a range from 286,000 to 320,000 fish. The 1980 chinook salmon catch in the East Management Area is projected to be 306,000 fish through September 20. The troll fishery is being closed at 12:01 a.m., September 21, 1980, to maintain the chinook salmon catch within the OY range. The closure corresponds with an identical State of Alaska closure within State territorial waters. The closure of the FCZ is to be instituted pursuant to the procedures described in Section 8.3.1.5 of the FMP.

Section 8.3.1.5 of the FMP provides for inseason adjustment to season and area openings and closures. Final regulations implementing the FMP, promulgated on September 8, 1980 (45 FR 59172), specify in 674.22 that these decisions shall be made by the Regional Director in accordance with criteria set out in that section. On June 17, 1980, the Assistant Administrator for Fisheries, NOAA (Assistant Administrator), with the approval of the Administrator, NOAA, delegated to the Regional Director authority to promulgate Field Orders making inseason adjustments.

The FMP adopted by the North Pacific Fishery Management Council (NPFMC) and implemented by the Secretary of Commerce (Secretary) established the chinook salmon optimum yield (OY) as a range from 286,000 to 320,000 fish. The 1979 chinook salmon catch of 366,000 fish exceeded the upper end of the OY range by 46,000 fish. As a result, the Council and the Alaska State Board of Fisheries, following a March 28, 1980, joint meeting, notified the Secretary that inseason management strategies would be utilized during 1980 to maintain the chinook salmon catch within the OY range.

Since the State of Alaska has already taken all available measures to minimize the incidental chinook catch in the salmon net fisheries, inseason management strategies were aimed primarily at the salmon troll fishery. For management purposes, a troll fishery OY was established that ranged from 266,000 to 300,000 chinook salmon. The strategies consisted of monitoring chinook salmon landings, comparing weekly catch rates to those during 1977-79, and projecting the final season catch in relation to the OY range.

Early season chinook rates were equal to or below the 1977 catch rates and projected to a final season catch at the low end of the troll OY range or below. However, higher than expected chinook landings occurred during August (Table 1) and the season catch is now projected to be near the upper end of the troll OY range by September 20. Fishing beyond September 20 would greatly increase the risk of exceeding the upper end of the troll OY range.

Table 1.—*Weekly Chinook Salmon Troll Catches From Aug. 1 to Sept. 20 (Weeks 31-38) 1976-80.*

[In thousands of fish]

	Weeks							
	31	32	33	34	35	36	37	38
Year:								
1976	10.0	11.6	7.1	8.3	7.3	6.2	3.8	2.3
1977	10.3	8.6	8.8	9.6	7.0	8.2	5.0	1.4
1978	23.3	17.0	17.9	14.3	10.1	9.0	4.3	1.3
1979	20.3	18.1	16.0	9.7	17.5	9.0	[2]8	[2]3
1980	16.8	16.7	19.7	[1]19.0	15.0			

[1] Combination of processed fish tickets and estimated outstanding tickets.
[2] Fishery closed after week 36.

The total cumulative chinook troll catch through September 20 is estimated as follows:

Cumulative troll catch through week 33 (August 16)	237,000
Estimated weeks 34 and 35 catches	34,000
Projected weeks 36-38 catches	+15,000
Total estimated troll catch through week 38	286,000
Estimated net fishery catches through week 35	+20,000
Total estimated SE Alaska chinook through September 20	306,000

The total estimated 1980 southeast Alaska chinook salmon catch of 306,000 fish is within 14,000 fish of the upper end of the OY range of 286,000 to 320,000 fish.

Eventual tabulation of fish tickets throughout the season has shown that inseason projections have tended to underestimate the catch. It is important, therefore, to close the troll fishery in the FCZ at this time to minimize the risk of exceeding the upper end of the OY range by underestimating the total catch. Following the closure, chinook salmon landing tickets will be tabulated, yielding a more precise total chinook salmon catch through the closing date.

The Regional Director finds, on the basis of the preceding considerations, that adequate protection of the resource makes public comment prior to issuance of this Field Order impracticable and contrary to the public interest, and that there is good cause for waiving the normal 30-day waiting period before it takes effect. However, public comments

on the necessity for the extent of this closure will be received by the Regional Director for a period of 60 days after the effective date of the Field Order. (Address: Director, Alaska Region, National Marine Fisheries Service, P.O. Box 1668, Juneau, Alaska 99802). During this 60-day period, the data and information on which this decision is based will be available for inspection during business hours at the NMFS, Alaska Regional Office, Federal Building, Room 453, 709 West 9th Street, Juneau, Alaska.

If comments are received during the 60-day period, the Regional Director shall, if appropriate, reconsider the necessity for the closure and, as soon as practicable after the reconsideration, publish in the **Federal Register** either:

(a) a notice of continued effectiveness of this closure; or

(b) a notice of modify or rescind the closure.

The Assistant Administrator has made an initial determination that these regulations are non-significant under Executive Order 12044 and that a regulatory analysis is not required.

An environmental impact statement was prepared for the FMP and is on file with the Environmental Protection Agency.

Signed in Washington, D.C., this 18th day of September 1980.

Robert K. Crowell,

Deputy Executive Director, National Marine Fisheries Service.

(16 U.S.C. 1801 *et seq.*)

In accordance with 50 CFR 674.22, 50 CFR 674.23(a)(2) is amended to read as follows:

§ 674.23 Time and area limitations.

(a)(1) * * *

(2) East Area. Commercial fishing for chinook, chum, sockeye, and pink salmon in the East Area is permitted from April 15 to 12:00 midnight Pacific Daylight Time (PDT) July 14, and from 12:00 midnight (PDT) July 24 to 12:01 a.m., September 21 only.

[FR Doc. 80-29477 Filed 9-23-80; 8:45 am]

BILLING CODE 3510-22-M

---

50 CFR Part 661

Commercial and Recreational Salmon Fisheries Off the Coasts of Washington, Oregon, and California; Correction to Regulations

AGENCY: National Oceanic and Atmospheric Administration (NOAA)/ Commerce.

ACTION: Correction to regulations.

SUMMARY: On Friday, August 29, 1980, final regulations applicable to Commercial and Recreational Fishing Off the Coasts of Washington, Oregon, and California were published in the **Federal Register** (45 FR 57723). Inadvertently, sections 661.10 and 661.11 on page 57726 were mistitled. Those sections are hereby correctly titled "Commercial fishing" and "Recreational fishing," respectively.

FOR FURTHER INFORMATION CONTACT: H. A. Larkins, (206) 442-7575.

Signed at Washington, D.C., this 18th day of September 1980.

(16 U.S.C. 1801 *et seq.*)

Robert K. Crowell,

Deputy Executive Director, National Marine Fisheries Service.

50 CFR Part 661 is amended as follows:

§ 661.10 [Amended]

1. Section 661.10—Strike "Recreational fishing" in the title and insert in its place "Commercial fishing."

§ 661.11 [Amended]

1. Section 661.11—Strike "Treaty Indian fishing" in the title and insert in its place "Recreational fishing."

[FR Doc. 80-29531 Filed 9-23-80; 8:45 am]

BILLING CODE 3510-22-M

Proposed Rules

Federal Register
Vol. 45, No. 187
Wednesday, September 24, 1980

This section of the FEDERAL REGISTER contains notices to the public of the proposed issuance of rules and regulations. The purpose of these notices is to give interested persons an opportunity to participate in the rule making prior to the adoption of the final rules.

DEPARTMENT OF AGRICULTURE

Agricultural Marketing Service

7 CFR Part 965

[Docket No. AO-307-A1]

Tomatoes Grown in South Texas; Recommended Decision on Proposed Amendment of Marketing Order and Opportunity To File Written Exceptions

AGENCY: Agricultural Marketing Service USDA.

ACTION: Proposed rule.

SUMMARY: This recommended decision proposes an amendment to the marketing order regulating tomatoes grown in South Texas, and provides interested persons an opportunity to file written exceptions to the proposal. The proposed amendment would add a public member to the administrative committee; establish the production area as a single district; authorize a penalty for late assessment payments; and allow the committee to finance production research projects and marketing promotion including paid advertising. The primary intent of the proposal is to improve the program's administration and usefulness.

DATE: Written exceptions to this recommended decision may be filed by October 9, 1980.

ADDRESSES: Written exceptions should be filed in duplicate with the Hearing Clerk, Room 1077-S, U.S. Department of Agriculture, Washington, D.C. 20250. All written submissions will be made available for public inspection at the office of the Hearing Clerk during regular business hours.

FOR FURTHER INFORMATION CONTACT: Charles W. Porter, Chief, Vegetable Branch, Fruit and Vegetable division, AMS, U.S. Department of Agriculture, Washington, D.C. 20250 (202) 447-2615. The Draft Impact Analysis relative to this propoosed rule is available on request form Mr. Porter.

SUPPLEMENTARY INFORMATION: This proposed action has been reviewed under USDA procedures established in Secretary's Memorandum 1955 to implement Executive Order 12044, and has been classified "not significant."

Prior documents in this proceeding: Notice of Hearing—Issued July 9, 1980, and published July 14, 1980 (45 FR 47155).

Preliminary Statement: Notice is hereby given of the filing with the Hearing Clerk of this recommended decision with respect to a proposed amendment of Marketing Order No. 965 regulating the handling of tomatoes grown in South Texas.

The above notice of filing of the decision and of opportunity to file exceptions to it is issued pursuant to the provisions of the Agricultural Marketing Agreement Act of 1937, as amended (7 U.S.C. 601 et seq.), and the applicable rules of practice and procedure governing the formulation of marketing agreements and marketing orders (7 CFR Part 900).

This proposed amendment was formulated on the record of a public hearing held at McAllen, Texas, July 30, 1980. Notice of the hearing was published in the July 14, 1980, issue of the **Federal Register.** The notice set forth a proposed amendment submitted by the Texas Valley Tomato Committee on behalf of tomato producers and handlers in the production area.

Material issues. The material issues presented on the record of hearing are as follows:

(1) Providing for handler members and a public member on the committee and setting qualifications for the new public member;

(2) Amending § 965.24 to establish the production area as a single district for the purpose of selecting committee members and alternates.

(3) Amending § 965.32 to require action taken at committee meetings conducted by telephone, telegraph, or by other means of communication to be limited in subject to nonregulatory provisions and to require seven concurring votes to approve such action.

(4) Amending § 965.42 to authorize penalty payments or interest charges, or both, to be paid in conjunction with late assessment payments;

(5) Amending § 965.43(a) to increase the allowable operating reserve fund to approximately two fiscal periods' budgeted expenses;

(6) Adding a new § 965.44 providing authority to receive voluntary contributions to finance research and development projects;

(7) Amending § 965.48 to allow the committee to finance production research projects and marketing promotion including paid advertising;

(8) Making such changes in the order as may be necessary to bring it into conformity with any amendments that may result from the hearing.

Findings and conclusions. The following findings and conclusions on the material issues are based on the record of the hearing:

(1) The Texas Valley Tomato Marketing Order (hereinafter in the text of findings and conclusions referred to as the "order") should be amended to eliminate the requirement that handler members on the committee also be producers. Record evidence indicates that when the order became effective in 1959 all tomato handlers of consequence were also tomato producers, but this is no longer the case. To permit the handler segment of the industry to nominate the best qualified candidates to serve on the committee, the three producer-handler positions currently provided for should be reestablished as handler positions, thereby eliminating the restriction that handlers must also be producers in order to serve as members or alternate members on the committee.

(2) The order should be amended to provide for public representation on the committee. To effectuate such a change, § 965.22 of the current order providing for the establishment and membership of the Texas Valley Tomato Committee should be revised to enlarge the committee from nine members to ten members, with the additional member to be a public member. Further, the section's provision for eligibility should be revised to indicate the criteria for the public member, a new paragraph (f) should be added to § 965.27 "Nominations" to indicate the procedures which should be used in the nomination of the public member, and § 965.35 "Duties" should be revised to incorporate nominating the public member as a committee duty.

Record evidence indicates that public representation on the Texas Valley Tomato Committee could improve the

exchange of information and viewpoints between industry members and the public. While the influence of consumers is implicitly present in the deliberations of producer and handler members, and all committee meetings are open to the public, the appointment of a public member could offer many advantages. In addition to providing direct communication between industry members and the public member, the industry would be able to discuss their problems and concerns with someone who would view these matters from outside the tomato industry. As is provided for producer or handler members, the additional public member should have an alternate.

Individuals selected from the public to serve on the committee should meet eligibility requirements specified by the committee in administrative rules issued with the approval of the Secretary. The record indicates that public representatives should not be permitted to have either a financial interest in the commercial production or marketing of tomatoes except as a consumer, or be a director, officer or employee of any firm so engaged. Also, the public representatives should be able to devote sufficient time and express a willingness to attend committee activities regularly and to familiarize themselves with the background and economics of the industry. The evidence further indicates that they should be residents of the production area so that participation in committee meetings and other activities would be more convenient and less expensive. In addition, public participants would have an opportunity to become and remain familiar with the production and marketing of tomatoes in the production area.

The record indicates that the public member and alternate should be selected and nominated by the incumbent members of the committee and that the nominations should be forwarded to the Secretary no later than July 15 each year. This will assure sufficient time for the Secretary to consider the nominations so that selection can be made prior to the beginning of each term of office.

(3) Sections 965.24 "Districts" and 965.26 "Selection" should be amended to establish the production area as a single district for the purpose of selecting committee members and alternate members.

Record evidence indicates that there has been a significant shift in tomato acreage and in the number of producers within the production area since the inception of the order, and there are now fewer producers and less acreage in all districts.

The order provides that upon recommendation of the committee, the Secretary may reestablish districts within the production area. Due to the shift in acreage and number of producers, the committee recommended in May 1978 the preservation of an equitable distribution of membership by reestablishing districts. Based on this recommendation, the four districts initially established were combined to form two districts for the purpose of selecting committee members. This reestablishment of districts was effective August 1, 1979.

Record evidence indicates that the shift in acreage and number of producers has continued, making the membership apportionment among these two districts inequitable. In fact, one district member position and one alternate member position on the committee are currently vacant due to the lack of eligible producers willing to serve in these positions.

Selection of members and alternate members from the production area at large would restore a fair, adequate, and equitable representation on the committee under current conditions. However, the record further indicates that the order's provision for redistricting and reapportionment of membership should be maintained. This provision is desirable in that it provides flexibility in the order by allowing the committee to consider from time to time whether the basis for representation could be improved and how such improvement should be made.

(4) Section 965.31 "Alternate members" should be amended to facilitate additional participation in committee meetings in the event members and their respective alternates are absent. Record evidence indicates that the committee has been deprived of the active participation of a number of knowledgeable alternates at meetings when members and their respective alternates both were absent and other alternates could not act for them. To ensure proper and efficient operation of the committee the order should provide that under such circumstances another alternate from the same group (producer or handler) may be designated to serve in the absent member's place.

(5) Paragraph (b) of § 965.32 "Procedure" should be amended by limiting the agenda of meetings conducted by telephone, telegraph, or other means of communications to nonregulatory provisions. Because there is no opportunity for face to face discussion at such meetings the exchange of information may be limited, impeding fair or adequate discussion of issues. To avoid questionable decisions the committee presently requires a unanimous vote of all committee members to approve any action at such meetings. This requirement has helped to assure that each action taken at such meetings has substantial committee support. However, record evidence indicates that a preferable safeguard is to require the more difficult or controversial issues be resolved at assembled meetings. The agenda of unassembled meetings would be limited to nonregulatory provisions, which usually are of limited impact and clear in their implications. Making such a change removes the need for a unanimous vote in passing such actions. Thus, single vote veto authority on relatively routine and nonregulatory matters should also be removed. Testimony indicates that at unassembled meetings a seven-vote concurrence would provide a decisive consensus of the committee and allow more rapid resolution.

(6) Section 965.42 "Assessments" should be amended to permit the committee to impose a late-payment or interest charge, or both, upon any handlers who are delinquent in their assessment payments. It is unfair to other handlers who pay assessments promptly if a handler fails to pay assessments when due. A delinquent handler has an advantage in the use of assessment funds. Moreover, nonpayment of assessments can have an adverse effect on the operation of an order and may require the committee to borrow money and pay interest to continue operation. The record evidence indicates that late payment charges or interest, or both, which are charged on all late accounts would defray some of the added cost of collecting such accounts and discourage persons from delaying their payments. Other similar programs which have experienced problems in collecting assessments promptly have found such provisions useful and effective. The provision should be of similar value to the Texas Valley tomato order.

(7) Record evidence also indicates that § 965.43 "Accounting" should be amended to increase the allowable operating reserve fund. Currently the order provides for reserves not to exceed approximately one fiscal period's budgeted expenses. This level appears adequate to cover administrative expenses when shortfalls in production result in low levels of committee income.

However, it is now necessary to increase allowable reserves to ensure adequate funding of long-term research programs. Many research projects

require several years before benefits are obtained. Thus, it is important that projects once initiated be assured long-range funding to the extent possible. A reserve of approximately two fiscal periods' budgeted expenses would be adequate to cover these longer-term commitments.

In addition, future research efforts could be jeopardized since research institutions might be unwilling to participate in projects desired by the committee if the year to year availability of funding were uncertain. This would be particularly true if the committee had previously been forced to abandon projects. A reserve of approximately two fiscal periods' budgeted expenses would provide an adequate reserve to cover the foregoing problems.

(8) A new § 965.44 should be added to the order to provide for the receipt of voluntary contributions to be used only for research and development projects. Record evidence indicates that research and market development projects for South Texas tomatoes directly benefit growers and handlers of that commodity, and secondarily benefit other groups and businesses whose interests are allied with the production and marketing of such tomatoes. These groups may desire to contribute resources to research and development projects and the order should provide that contributions may be accepted by the committee. It is important, however, that the committee have complete control over the use of any contributions, which must be free of any encumbrances by the donor.

(9) Section 965.48 "Research and development" should be amended to allow the committee to finance production research and marketing promotion including paid advertising, in addition to marketing research and development projects.

Record evidence indicates that effective production research is needed to improve tomato quality and yield, and to reduce production costs. Problems which may be corrected through research include increasing the resistance of tomatoes to cracking, early blight, gray leaf spot, leaf mold, fruit rots and fusarium wilts. In addition, more productive varieties of tomatoes are needed.

The foregoing are only examples of the kinds of research that the committee may wish to undertake. They are not intended to be all inclusive. It is not possible to anticipate all needs at this time. Therefore, the authority of the committee to establish production research programs should be sufficiently flexible to the extent permitted under the act. This should facilitate timely development of production programs suitable to problems that arise. Competition for public funding for agricultural research has increased within the agricultural community in recent years. The South Texas tomato industry must compete for such funds with many other groups in agriculture. Research time, effort, and funds are often unavailable to the industry for areas of special interest. Record evidence indicates that tomato industry money, provided by the committee, would facilitate research into these areas.

Record evidence shows that most production research on tomatoes in Texas is currently conducted by public agencies, such as Texas A&M University. Research funded by the committee would most likely also be conducted by such public agencies although other agencies, individuals designated by the committee, and the committee itself would be eligible.

The authority to engage in marketing promotion projects, including paid advertising, for tomatoes is desirable so that the industry, through these activities, can help to improve its competitive position in the marketplace.

The record indicates that mass merchandising through supermarkets and other operations with centralized buying power makes it necessary for a commodity to sell itself through its appearance on retail shelves. However, preselling to consumers through promotion and advertising plus in-store promotional efforts have been successful in encouraging sales both to consumers and to merchandisers.

South Texas tomatoes must compete directly with tomatoes from other areas and with other salad items. They must also compete for shelf space and advertising attention with a host of fresh and processed vegetables and fruits, many of which are nationally advertised and promoted. It would greatly strengthen the position of the industry if it could offer the retailer not only an attractive quality product at a reasonable price, but also one backed up with industry-financed advertising and promotion.

The order should authorize any or all forms of promotion, including paid advertising, that are permitted under the act.

In formulating projects and objectives the committee should be authorized to secure the advice and services of persons or agencies knowledgeable in the promotional and advertising field. In the conduct of any promotional program the committee should be authorized to conduct promotional projects itself, or to contract for the conduct of such projects with other agencies such as universities, State marketing agencies, Federal agencies, private agencies or others qualified in this field.

All proposals for research projects and promotion projects should be submitted to the Secretary for approval. However, the committee should have the authority to make necessary changes in any project as long as such changes do not alter the project's original objectives, or require total project expenditures greater than those approved by the Secretary. Any changes which would require expenditures greater than those approved, or which would change the objectives of the project, would require prior approval by the Secretary. Activity reports should be issued by the committee at least annually to allow the Secretary to maintain appropriate supervision and control. Agencies conducting research or promotion would also furnish at least annual progress reports to the committee and Secretary.

(10) Section 965.60 "Inspection and certification" should be amended to allow the committee to accept other documents than the formal inspection certificate as verification of inspection. Record evidence indicates that the Texas-Federal Inspection Service currently uses shipment release forms to ensure that inspection has taken place and to expedite the movement of this highly perishable commodity. This eliminates the need to await completion of the formal inspection certificate.

This amendment would eliminate the discrepancy between procedures used for other South Texas marketing orders and those required under this order.

(11) Certain conforming changes should also be made so that the order, as amended, would be consistent. One such change, to add nominating the public member as a committee duty to § 965.35 "Duties," has already been mentioned in the discussion about adding the public member. All such changes should be incorporated in the recommended amendment of the order.

Rulings on briefs of interested persons. At the conclusion of the hearing, the Administrative Law Judge fixed August 18, 1980, as the final date for interested persons to file proposed findings and conclusions, and written arguments or briefs, based upon the evidence received at the hearing. None was received.

General findings. Upon the basis of the record, it is found that:

(1) The following findings are supplementary, and in addition to the findings and determinations which were made in connection with the issuance of the marketing order. Except for those

findings and determinations which may be in conflict with the findings and determinations set forth herein, all of those findings and determinations are hereby ratified and affirmed;

(2) The marketing order, as hereby proposed to be amended, and all of the terms and conditions of it, will tend to effectuate the declared policy of the act;

(3) The marketing order, as hereby proposed to be amended, regulates the handling of tomatoes grown in the production area in the same manner as, and is applicable only to persons in the respective classes of commercial activity specified in the marketing order upon which hearings have been held;

(4) The marketing order as hereby proposed to be amended is limited in its application to the smallest regional production area which is practicable consistent with carrying out the declared policy of the act, and the issuance of several orders applicable to subdivisions of the production area would not effectively carry out the declared policy of the act;

(5) The marketing order prescribes, so far as practicable, such different terms applicable to different parts of the production area as are necessary to give due recognition to the difference in the production and marketing of tomatoes grown in the production area; and

(6) All handling of tomatoes grown in the production area as defined in the marketing order as hereby proposed to be amended is in the current of interstate or foreign commerce or directly burdens, obstructs, or affects such commerce.

Recommended Amendment of the Marketing Order

The following amendment of the marketing order is recommended as the detailed means by which the foregoing conclusions may be carried out:

1. Amend paragraphs (a) and (b) of § 965.22 to read:

§ 965.22 Establishment and membership.

(a) The Texas Valley Tomato committee is hereby established, consisting of 10 members, including six producers, three handlers, and one public member. Each shall have an alternate who shall have the same qualifications as the member.

(b) Each committee member and alternate shall be a resident of the production area. Industry members shall be producers or handlers, or officers or employees of a producer or handler or of a producers' cooperative marketing organization, in the district for which selected. Those representing a producer's marketing cooperative shall be eligible to serve as a handler member of alternate. The public member shall be a person who has no financial interest in the commercial production or marketing of tomatoes except as a consumer, and shall not be a director, officer or employee of any firm so engaged.

2. Amend § 965.24 to read:

§ 965.24 Districts.

For the purpose of determining the basis for selecting committee members and alternates, the entire production area shall be considered a single district. However, the area may be redistricted pursuant to § 965.25.

3. Amend § 965.26 to read:

§ 965.26 Selection.

The Secretary shall select the committee members and alternates to reflect existing representation established pursuant to §§ 965.24 or 965.25.

4. Amend paragraphs (a), (c), and (d) and add new paragraph (f) to § 965.27 to read:

§ 965.27 Nomination.

(a) A meeting or meetings of producers and handlers shall be held in each district to nominate members and alternates on the committee. The committee shall hold such meetings or cause them to be held prior to June 15 of each year, or by such other date as may be specified by the Secretary.

* * * * *

(c) Nominations for committee members and alternates shall be supplied to the Secretary in such manner and form as he may prescribe, not later than July 15 of each year, or by such other date as may be specified by the Secretary.

(d) Only producers may participate in designating producer nominees, and only handlers may participate in naming handler nominees. In the event a person is engaged in producing tomatoes in more than one district, such person shall elect the district within which to participate in designating nominees; and

* * * * *

(f) The public member and alternate shall be nominated by the committee. The committee shall prescribe such additional qualifications, administrative rules and procedures for selection and voting for each candidate as it deems necessary and as the Secretary approves.

5. Amend § 965.31 to read:

§ 965.31 Alternate members.

An alternate member of the committee shall act in the place and stead of the member during such member's absence or when designated to do so. In the event both a member of the committee and that member's respective alternate are unable to attend a committee meeting, the member, alternate, or the committee, in that order, may designate another alternate from the same group (producer or handler) to serve in such member's stead. In the event of the death, removal, resignation, or disqualification of a member, the alternate shall act for the member until a successor for such member is selected and has qualified. The committee may request the attendance of alternates at any or all meetings, notwithstanding the expected or actual presence of the respective members.

6. Amend § 965.32 to read:

§ 956.32 Procedure.

(a) At assembled meetings six members of the committee shall constitute a quorum and six concurring votes shall be required to approve any committee action. Such votes shall be cast in person.

(b) The committee may meet by telephone, telegraph, or other means of communication. The agendas of such meetings shall be limited to nonregulatory provisions and any vote cast shall be promptly confirmed in writing. On such occasions seven concurring votes shall be required to approve any action.

7. Amend § 965.35(a) by inserting:

§ 965.35 [Amended]

* * * "or alternates" * * * after "subcommittees of committee members" Add a new paragraph (n) to § 965.35 to read:

(n) To recommend nominees for the public member and alternate.

8. Amend § 965.42(a) by adding the following sentence to it:

If a handler does not pay the assessment within the time prescribed by the committee, the assessment may be increased by a late payment charge or an interest charge, or both.

Amend the first sentence of § 965.42(b) to read:

Assessments, late payment charges and interest charges shall be levied upon handlers at rates established by the Secretary.

9. Amend § 965.43(a)(2) by revising the proviso in the first sentence to read as follows:

§ 965.43 [Amended]

(a) * * *

(2) * * *

* * * Provided, that funds already in the reserve do not exceed approximately two fiscal periods' budgeted expenses. * * *

10. Add a new § 965.44 to read:

§ 965.44 Contributions.

The committee may accept voluntary contributions but these shall only be used to pay expenses incurred pursuant to § 965.48. Furthermore, such contributions shall be free from any encumbrances by the donor and the committee shall retain complete control of their use.

11. Amend § 965.48 to read:

§ 965.48 Research and development.

The committee, with the approval of the Secretary, may establish or provide for the establishment of production research, marketing research and development projects, and marketing promotion including paid advertising designed to assist, improve, or promote the marketing, distribution, and consumption or efficient production of tomatoes. The expenses of such projects shall be paid from funds collected pursuant to § 965.42 or § 965.44.

12. Amend § 965.60(e) to read:

§ 965.60 Inspection and certification.

* * * * *

(e) The committee may recommend and the Secretary may require that no handler shall transport or cause the transportation of tomatoes by motor vehicle or by other means unless shipment is accompanied by a copy of the inspection certificate issued thereon, or such other documents as may be required by the committee. Such certificates or documents shall be surrendered to proper authorities at such times and in such manner as may be designated by the committee, with the approval of the Secretary.

Signed at Washington, D.C., on September 19, 1980.

William T. Manley,

Deputy Administrator, Marketing Program Operations.

[FR Doc. 80-29616 Filed 9-23-80; 8:45 am]

BILLING CODE 3410-02-M

DEPARTMENT OF ENERGY

Office of the Secretary

10 CFR Part 710

Criteria and Procedures for Determining Eligibility for Access to Classified Matter or Significant Quantities of Special Nuclear Material; Correction of Nomenclature

AGENCY: Department of Energy.

ACTION: Proposed changes in scope and applicability and administrative review procedures.

SUMMARY: The Department of Energy (DOE) proposes to amend 10 CFR Part 710. This part previously was published as an Energy Research and Development Administration (ERDA) regulation and was revised as of May 31, 1979, to reflect its new status as a DOE regulation. Section 301 of the Department of Energy Organization Act (Pub. L. 95-91, transferred to, and vested in, the Secretary of Energy all the functions previously vested in the Administrator of ERDA or in ERDA. To reflect better its present character as a DOE regulation, DOE is amending Part 710 and is correcting nomenclature throughout Part 710 to remove certain inaccuracies contained in the May 31, 1979 revision. That revision, for example, incorrectly refers to the "Administrator of the DOE" rather than to the "Secretary of the DOE." Under the proposal, DOE is amending the administrative review procedures used for granting, denying or revoking an individual's access authorization. Such an authorization allows an individual access to national security information, Restricted Data, and special nuclear material. DOE also is proposing to require access authorization for individuals handling lesser amounts of special nuclear material than has previously been the case.

DATES: Comments must be received on or before: October 24, 1980.

ADDRESSES: Written comments should be directed to George Weisz, Director, Office of Safeguards and Security, U.S. Department of Energy, Washington, D.C. 20545.

FOR FURTHER INFORMATION CONTACT:

Martin J. Dowd, Director, Division of Security, Office of Safeguards and Security, U.S. Department of Energy, Washington, D.C. 20545 (301-353-3652).

Paul W. Lewis, Office of General Counsel, U.S. Department of Energy, Room 6A-179, Forrestal Building, 1000 Independence Avenue, SW., Washington, D.C. 20545 (202-252-8618).

SUPPLEMENTARY INFORMATION: The current procedures for determining an individual's eligibility for access authorization involve a Personnel Security Board and a Personnel Security Review Board. The Review Board has consisted of persons who are members of a Personnel Security Review Board Panel. This Panel was chartered as an advisory committee under the Federal Advisory Committee Act, Pub. L. 92-463, as amended (FACA). DOE has allowed this advisory committee to lapse. Under the proposed rule, DOE is establishing the DOE Personnel Security Review Examiners as the replacement review mechanism. This mechanism will continue to provide for review by disinterested "outside" experts, but these persons will act as individual consultants rather than as members of a collegial body rendering consensus advice. Such an approach provides for an impartial review mechanism, and also assists DOE in meeting its responsibility under FACA to maintain only essential advisory committees.

The Personnel Security Boards presently consist of three members who hear a case and make findings and recommendations regarding access authorization. One can interpret the present make-up and operation of the Personnel Security Boards as causing these Boards to fall within the FACA definition of an advisory committee. In order to continue to assure a hearing for individuals seeking access authorization, but at the same time to preclude the inadvertent establishment of unnecessary advisory committees, DOE intends to replace the Personnel Security Boards with individual Hearing Officers.

Special nuclear materials are plutonium, uranium enriched in the isotope 233 or 235, or any other material that DOE may determine, in accordance with 42 U.S.C. 2071, to be special nuclear material. Presently, access authorization is required for those persons who, in the course of their duties, have access to "significant quantities" of special nuclear material (5,000 grams or more of uranium 235 or 2,000 or more grams of plutonium or uranium 233). These levels were selected to ensure safeguarding of materials sufficient in amount to create an explosive device. DOE believes that these materials, because of their radioactive attributes, may present hazards to health or safety and to the security of the nation, even in lesser quantities than those set out above. DOE therefor proposes to require access authorization for those individuals who, in the course of their duties, have access to certain of those lesser amounts of special nuclear materials. In so doing, DOE is expanding in § 710.5 the term "significant quantities", to include lesser amounts of special nuclear materials than were previously included.

Interested persons are invited to submit written comments with respect to the proposed amendments to the address provided above. Comments should be identified on the outside of the envelope and on the documents submitted to DOE with the designation "10 CFR Part 710." It is requested that fifteen copies of any written comment be provided, where possible, in order to

ensure expeditious consideration of the comments within DOE.

If any person, when commenting, wishes to file a document with DOE claiming that some or all of the information contained in the document is exempt from mandatory public disclosure under the Freedom of Information Act [5 U.S.C. 552 as amended] or its otherwise exempt from public disclosure, he must indicate in writing which information is claimed to be confidential, stating the justification for nondisclosure. DOE retains the right to make its own determination regarding any claim of confidentiality.

In accordance with § 501(c)(1) of the Department of Energy Organization Act, Pub. L. No. 95-91, DOE has determined that these regulations present no substantial issue of fact or law, and are unlikely to have a substantial impact on the Nation's economy or large numbers of individuals or businesses. Accordingly, no public hearing is required.

DOE has determined in accordance with Executive Order 12044, dated March 23, 1978, and DOE Order 2030.1, dated December 18, 1978, that this is a nonsignificant regulation for the following reasons: it has no more than a minimal effect upon the objectives of national energy policy or energy statutes, the economy, competition, the quality of the environment, state and local government programs and existing regulatory programs of DOE or other Executive Agencies; it will not impose new compliance and reporting burdens nor add to existing requirements; it is not a matter of major concern to the President or Congress; it will not require substantial DOE resources to develop and enforce it; and substantial public comment is not anticipated.

Dated at Washington, D.C. this 15th day of September 1980.

Duane C. Sewell,

Assistant Secretary for Defense Programs.

In consideration of the foregoing, it is proposed to amend 10 CFR Part 710 as follows:

PART 710—CRITERIA AND PROCEDURES FOR DETERMINING ELIGIBILITY FOR ACCESS TO CLASSIFIED MATTER OR SIGNIFICANT QUANTITIES OF SPECIAL NUCLEAR MATERIAL

1. Part 710 is amended by deleting the words "Assistant Administrator for National Security", "Administrator", "Personnel Security Review Board" (or "Board"), and "Personnel Security Board" (or "Board") wherever they appear, and substituting the words, "Assistant Secretary for Defense Programs", "Secretary", "Personnel Security Review Examiners", and "Hearing Officer", respectively.

2. Section 710.5 is revised to read as follows:

§ 710.5 Definitions.

As used in this part:

(a) "Access Authorization" means an administrative determination that an individual (including a consultant) who is employed by, or is an applicant for employment with DOE contractors, agents, and access permittees of DOE is eligible for access to Restricted Data or national security information or is eligible for access to, or control over, significant quantities of special nuclear material; and an individual (including a consultant) who is a DOE employee or applicant for DOE employment or otherwise designated by the Secretary of DOE is eligible for security clearance.

(b) For the purposes of this regulation, "significant quantities of special nuclear material" means unclassified special nuclear material, not subject to a Nuclear Regulatory Commission (NRC) license, in one facility or one shipment in the following quantities:

(1) Uranium 235 (contained in uranium enriched 20 percent or more in the Uranium 235 isotope) alone, or in combination with Plutonium and/or Uranium 233 when (multiplying the Plutonium and/or Uranium 233 content by 2½) the total is 1,000 grams or more.

(2) Plutonium and/or Uranium 233 when the Plutonium and/or Uranium 233 content is 400 grams or more.

(3) Special nuclear material in lesser quantities but which is located in the same area or shipment with other special nuclear material with which it could be selectively combined to produce the equivalent quantities in paragraph (b) (1) or (2) of this section.

(c) "DOE Personnel Security Review Examination" means a review process as described in § 710.31, in which the designated DOE Personnel Security Review Examiners individually and independently review questions concerning the eligibility or continued eligibility of those individuals described in § 710.2, and offer findings and recommendations to the DOE Assistant Secretary for Defense Programs.

(d) "DOE Personnel Security Review Examiners" are persons appointed by the DOE Assistant Secretary for Defense Programs who are designated to review questions concerning the eligibility or continued eligibility of those individuals described in § 710.2. Examiners shall be U.S. citizens and have a DOE "Q" clearance and shall not otherwise be in the employ of the DOE.

(e) "Hearing Counsel" means a DOE attorney assigned to prepare and conduct hearings as provided in §§ 710.26 and 710.27.

(f) "Manager of Operations" means the Manager of a DOE Operations Office (and at Headquarters, the Director, Office of Safeguards and Security—see § 710.38).

(g) "Hearing Officer" is an individual appointed by the Manager of Operations who, upon considering the evidence at a hearing, makes specific findings as to the truth of the derogatory information, and determines whether to recommend to the Manager of Operations the granting, denial, or revocation of an individual's access authorization. Hearing Officers shall be U.S. citizens and have a DOE "Q" clearance.

(h) "Secretary" means the head of the Department of Energy as provided by section 201 of the Department of Energy Organization Act.

§ 710.20 [Amended]

3. § 710.20 is amended by deleting the words "Personnel Security Board" where they appear.

4. § 710.22 is amended by revising paragraphs (c), (e), and (f) to read as follows:

§ 710.22 Notice to Individual.

* * * * *

(c) That in the event the individual desires a hearing the individual must, within twenty days of the date of receipt of the notification letter, indicate in writing to the Manager of Operations from whom the letter was received that the individual wishes a hearing before a Hearing Officer.

* * * * *

(e) That, if the individual so requests, a hearing will be scheduled before a Hearing Officer, with due regard for the convenience and necessity of the parties or their representatives, for the purpose of affording the individual an opportunity of supporting his eligibility for access authorization;

(f) That, if the individual requests a hearing, the individual will be notified in writing of the Hearing Officer's identity when the Hearing Officer is appointed by the Manager of Operations.

* * * * *

5. § 710.25 is amended by revising paragraph (b) to read as follows:

§ 710.25 Selection of DOE Hearing Counsel.

* * * * *

(b) Hearing Counsel shall, prior to the scheduling of the hearing, review the information in the case and shall request the presence of witnesses and the production of physical evidence in

accordance with the provisions of paragraphs (m), (n), (o), and (p) of § 710.27. When the presence of a witness is deemed by the Hearing Counsel to be necessary or desirable to a proper determination of the issues before the Hearing Officer, the Manager of Operations shall make arrangements by subpoena or otherwise for such witnesses to appear, be confronted by the individual, and be subject to examination and cross-examination.

6. § 710.26 is amended by revising the entire section to read as follows:

§ 710.26 Appointment of Hearing Officers.

(a) Upon notification from the Hearing Counsel that arrangements for an expeditious hearing have been completed, the Manager of Operations shall appoint a Hearing Officer.

(b) No person shall serve as a Hearing Officer who has prejudged the case to be heard; who possesses information that would impair his ability to render impartial recommendations or advice; or who for bias or prejudice generated for any reason would be unable to render fair and impartial recommendations or advice;

(c) Immediately upon the appointment of a Hearing Officer, the Manager of Operations will notify the individual of the identity of the Hearing Officer and of the individual's right to challenge the Hearing Officer for cause. Such challenge, accompanied by the reasons therefor, must be submitted to the Manager of Operations within seventy-two hours of the receipt of the notice of the identity of the Hearing Officer.

(d) In the event the individual challenges the Hearing Officer, the Manager of Operations will rule on the challenge. Where the challenge of the individual is sustained, the Manager of Operations shall appoint a new Hearing Officer and notify the individual. The individual shall have the right to challenge the new Hearing Officer for cause and such challenge shall be dealt with in the same manner as an original challenge. The Manager of Operations shall also notify the individual of the rejection of any challenge. The Hearing Officer shall convene a hearing as soon as is reasonably practicable;

(e) The Manager of Operations shall notify the individual in writing, at least one week in advance, of the date, hour, and place the hearing will convene. In the event the individual fails to appear at the time and place specified, a recommendation as to the final action to be taken shall be made by the Manager of Operations to the Assistant Secretary for Defense Programs on the basis of the record in the case. At the request of the individual, however, the Manager of Operations may permit a hearing at a newly scheduled date, hour, and place for good cause shown.

7. In § 710.27, paragraphs (a), (c)(2), (e), (f) and (j) are revised to read as follows:

§ 710.27 Conduct of proceedings.

(a) The proceedings shall be conducted by the Hearing Officer in an orderly, impartial, and decorous manner with every effort made to protect the interest of the Government and of the individual in determining the truth of the allegations. In no case will undue delay be tolerated or will the individual be hampered by unduly restricting the time necessary for proper preparation and presentation. In performing duties, the Hearing Officer shall always bear in mind and make clear to all concerned that the proceeding is an administrative hearing and not a trial;

* * * * *

(c) * * *

(2) Hearing Counsel shall express no opinion to the Hearing Officer concerning the merits of the case. Hearing Counsel shall advise the individual of the individual's rights under these procedures when the individual is not represented by counsel of the individual's own choosing;

* * * * *

(e) During the course of the hearing the Hearing Officer shall rule on all questions presented to the Hearing Officer for the Hearing Officer's determination.

(f) In the event it appears in the course of the hearing that Restricted Data or national security information may be disclosed, it shall be the duty of the Hearing Officer to assure that disclosure is not made to persons who are not authorized to receive it.

* * * * *

(j) The Hearing Officer shall endeavor to obtain all the facts that are reasonably available in order to arrive at recommendations. If, prior to or during the proceeding, in the opinion of the Hearing Officer the allegations in the notification letter are not sufficient to cover all matters into which inquiry should be directed, the Hearing Officer shall recommend to the Manager of Operations concerned that, in order to give more adequate notice to the individual, the notification letter should be amended. Any amendment shall be made with the concurrence of the Director, Division of Safeguards and Security, DOE, and the Office of the General Counsel. If, in the opinion of the Hearing Officer, the circumstances of such an amendment may involve an undue hardship to the individual, because of limited time to answer the new allegations in the notification letter, an appropriate adjournment shall be granted upon the request of the individual.

* * * * *

8. Section 710.28 is amended by revising paragraphs (c) and (d) to read as follows:

§ 710.28 Recommendation of the Hearing Officer.

* * * * *

(c) The Hearing Officer's recommendation shall be predicated upon the Hearing Officer's findings. If, after considering all the factors in light of the criteria set forth in this part, the Hearing Officer is of the opinion that it will not endanger the common defense and security and will be clearly consistent with the national interest to grant access authorization to the individual, the Hearing Officer shall make a favorable recommendation; otherwise the Hearing Officer shall make an adverse recommendation.

(d) The Hearing Officer's recommendation shall be submitted to the Manager of Operations accompanied by a statement of the findings and reasons supporting the Hearing's Officer's conclusions.

10. Section 710.29 is amended by revising paragraph (b)(1) to read as follows:

§ 710.29 New evidence.

* * * * *

(b) * * *

(1) Refer the matter to the Hearing Officer who had been appointed in the individual's case when the Manager of Operations has not yet transmitted the record to the Assistant Secretary for Defense Programs. The Hearing Officer receiving the application for the presentation of the new evidence shall determine the form in which it shall be received, whether by testimony before the Hearing Officer, by deposition, or by affidavit.

* * * * *

11. Section 710.30 is amended by revising paragraph (a) to read as follows:

§ 710.30 Actions on the recommendations.

(a) The recommendations of the Hearing Officer shall be signed by the Hearing Officer, and together with the record of the case, shall be transmitted with the least practicable delay to the Manager of Operations concerned.

* * * * *

11. § 710.31 is amended by revising the entire section to read as follows:

§ 710.31 Recommendation of the DOE Personnel Security Review Examiners.

(a) The Assistant Secretary for Defense Programs shall designate three DOE Personnel Security Review Examiners to conduct a DOE Personnel Security Review Examination of the record of the case. The designated Examiners shall individually and independently, without consulting or otherwise communicating with one another, consider the matter under review based upon the record supplemented by such brief as the individual submits. Examiners may request such additional briefs as any of them deems appropriate, which will be obtained by the Assistant Secretary for Defense Programs and provided to each Examiner. In any case where an Examiner determines that additional evidence or further proceedings are necessary, the record may be returned to the Assistant Secretary for Defense Programs with a recommendation that the case be remanded to the Manager of Operations for appropriate action, which may include returning the case to the Hearing Officer and reconvening the hearing to obtain additional testimony;

(b) In the Examiners' consideration, each shall make individual findings and recommendations on the record supplemented by additional testimony or briefs as have previously been determined by an Examiner(s) as appropriate. When additional testimony is taken by the Hearing Officer, a verbatim transcript of such testimony shall be made part of the record;

(c) The Examiners shall not consider the possible impact of the loss of the individual's services upon the DOE program;

(d) After consideration, each Examiner shall individually prepare a report of findings and recommendations and submit the report in writing to the Assistant Secretary for Defense Programs. These findings and recommendations shall be fully supported by stated reasons supporting their conclusions.

* * * * *

[FR Doc. 80-29467 Filed 9-23-80; 8:45 am]

BILLING CODE 6450-01-M

FEDERAL RESERVE SYSTEM

12 CFR Part 226

[Reg. Z; FG-0173]

Truth in Lending; Proposed Official Staff Interpretation

AGENCY: Board of Governors of the Federal Reserve System.

ACTION: Proposed official staff interpretation.

SUMMARY: In accordance with 12 CFR 226.1(d)(2), the Board staff is publishing for comment official staff interpretation FC-0173 of Regulation Z, Truth in Lending, regarding security interest disclosures in closed end credit transactions. The proposed interpretation holds that a creditor need not disclose as a security interest its right to receive insurance proceeds or unearned premiums nor does it need to dislose that it is named as loss payee or beneficiary on an insurance policy.

DATE: Comments must be received on or before October 24, 1980.

ADDRESS: Comments (including reference to FC-0173) may be mailed to Secretary, Board of Governors of the Federal Reserve System, Washington, D.C 20551, or delivered to Room B-2223, 20th and Constitution Avenue, N.W., Washington, D.C. between 8:45 a.m. and 5:15 p.m. Comments may be inspected in Room B-1122 between 8:45 a.m. and 5:15 p.m.

FOR FURTHER INFORMATION CONTACT: Claudia J. Yarus, Staff Attorney, Division of Consumer and Community Affairs, Board of Governors of the Federal Reserve System, Washington, D.C. 20551 (202-452-3667).

SUPPLEMENTARY INFORMATION: (1) The text of official staff interpretation FC-0173 is published with identifying details deleted to the extent required to prevent a clearly unwarranted invasion of personal privacy. The Board maintains and makes available for public inspection and copying a current index providing identifying information for the public, subject to certain limitations stated in 12 CFR Part 261.6.

(2) The letter is being issued as a proposal, rather than in final form, and interested persons are invited to submit relevant comment.

(3) After comments are considered, this official staff interpretation may be amended, may be withdrawn or may remain unchanged. Final action regarding this official staff interpretation will appear in the **Federal Register.**

(4) Authority: 15 U.S.C. 1640(f).

§ 226.2(gg) Creditor is not required to disclose as a security interest its right to receive insurance proceeds or unearned insurance premiums nor to disclose that it is named as loss payee or beneficiary on an insurance policy.

§ 226.8(b)(5) Creditor is not required to disclose as a security interest its right to receive insurance proceeds or unearned insurance premiums nor to disclose that it is named as loss payee or beneficiary on an insurance policy.

This is in response to your letter requesting an official staff interpretation regarding security interest disclosures under § 226.8(b)(5) of Regulation Z. You wish to know whether the creditor's right to receive proceeds or unearned premiums from a property or a credit life insurance policy must be disclosed as a security interest. You also ask if a security interest should be disclosed where a creditor requires that it be named as the loss payee on a property insurance policy or as the beneficiary on a credit insurance policy.

Section 226.8(b)(5) addresses disclosure of security interests in other than open end credit transactions. It requires disclosure of the type of security interest taken and identification of the property to which that interest relates.

The staff believes that a creditor is not required by this section to disclose its right to receive insurance proceeds or unearned insurance premiums nor to disclose that it is named as loss payee or beneficiary on an insurance policy. Truth in Lending disclosures are meant to provide useful information to consumers to enhance credit shopping. Consumers do need to know that they risk the loss of certain property if they default. The disclosures under § 226.8(b)(5) inform consumers of which property is subject to that risk at the time the credit decision is being made. We believe that information regarding the creditor's interest in insurance proceeds and unearned premiums would not be used in comparison shopping. Although a technical reading of the security interest definition might cover a creditor's interest in insurance proceeds and unearned premiums, it is our opinion that such incidental interests are not the type of interests meant to be covered by § 226.8(b)(5).

The staff recognizes that there are a number of circuit court decisions to the contrary. We believe, however, that our position better serves the purpose of the statute and the regulation to convey in a meaningful way information that can be used by consumers in shopping for credit.

This is an official staff interpretation of Regulation Z, issued in accordance with § 226.1(b)(2). It is limited to the facts and issues discussed herein.

Board of Governors of the Federal Reserve System, September 18, 1980.

Sincerely,

Janet Hart,

Director.

Theodore E. Allison,

Secretary of the Board.

[FR Doc. 80-29604 Filed 9-23-80; 8:45 am]

BILLING CODE 6210-01-M

DEPARTMENT OF ENERGY

Federal Energy Regulatory Commission

18 CFR Part 141

[Docket No. Rm80-55]

Revision Annual Report for Electric Utilities, Licensees and Others (Classes A and B); Form No. 1; Extension of Comment Period

Issued September 11, 1980.

AGENCY: Federal Energy Regulatory Commission.

ACTION: Notice of extension of comment period.

SUMMARY: This Notice extends the comment period until October 20, 1980 for the Notice of Proposed Rulemaking to revise Form No. 1, Annual Report for Electric Utilities, Licensees and Others (Issued July 10, 1980 and published at 45 FR 47705, July 16, 1980), and provides that persons may contact Commission staff if they are interested in a meeting to discuss the rulemaking.

DATE: The comment period is extended until October 20, 1980.

FOR FURTHER INFORMATION CONTACT:
Cathy Ciaglo, Office of General Counsel, Federal Energy Regulatory Commission, 825 North Capitol Street, NE., Room 3329, Washington, DC 20426, (202) 357-8318.
Joseph Neubeiser, Office of the Executive Director, Federal Energy Regulatory Commission, 825 North Capitol Street, NE., Room 3311, Washington, DC 20426, (202) 357-8210.

On July 10, 1980 the Commission issued a Notice of Proposed Rulemaking in this docket. The comment period closed September 8, 1980. In response to the request of numerous commenting persons, the Commission is extending the period for public comment until 5:00 p.m., EST, Monday, October 20, 1980.

Several persons indicated an interest in meeting with the Commission staff for the purpose of discussing the subject rulemaking. Accordingly, any persons interested in meeting informally with the staff should contact Joseph Neubeiser, Office of the Executive Director (202/357-8210) no later than Tuesday, September 30, 1980. Minutes of any meetings will be taken and placed in the public file.

Because of the efforts the Commission anticipates will be necessarily undertaken by the utilities to accommodate any revised rule, the Commission has decided the Form 1's due March 31, 1981 for the calendar year 1980 time period must be prepared in conformance with present regulations. Any revisions to the regulations resulting from this rulemaking docket will not be applicable until the filing of the Form 1's for the 1981 calendar period. Such timing will facilitate the period of transition should any final Commission action cause any interested persons to seek other sources of that data which may no longer be made available in Form 1.

By Direction of the Commission.

Kenneth F. Plumb,

Secretary.

[FR Doc. 80-29612 Filed 9-23-80; 8:45 am]

BILLING CODE 6450-85-M

DEPARTMENT OF THE TREASURY

Internal Revenue Service

[LR-2139]

26 CFR Part 1

Withholding of Tax Under Chapter 3 of the Internal Revenue Code of 1954 With Respect to Virgin Islands Inhabitants; Public Hearing on Proposed Revocation of Regulation

AGENCY: Internal Revenue Service, Treasury.

ACTION: Public hearing on proposed revocation of regulation.

SUMMARY: This document provides notice of a public hearing relating to the proposed revocation of a regulation providing an exemption from withholding of tax under chapter 3 of the Internal Revenue Code of 1954.

DATES: The public hearing will be held on November 7, 1980, beginning at 10:00 a.m. Outlines of oral comments must be delivered or mailed by October 24, 1980.

ADDRESS: The public hearing will be held in the I.R.S. Auditorium, Seventh Floor, 7400 Corridor, Internal Revenue Building, 1111 Constitution Avenue, N.W., Washington, D.C. The outlines should be submitted to the Commissioner of Internal Revenue, Attn: CC:LR:T (LR-2139), Washington, D.C. 20224.

FOR FURTHER INFORMATION CONTACT: Charles Hayden of the Legislation and Regulations Division, Office of Chief Counsel, Internal Revenue Service, 1111 Constitution Avenue, N.W., Washington, D.C. 20224, 202-566-3935, not a toll-free call.

SUPPLEMENTARY INFORMATION: The subject of the public hearing is a proposed revocation of a regulation pertaining to sections 1441 and 1442 of the Internal Revenue Code of 1954. The proposed revocation of the regulation appeared in the **Federal Register** for Tuesday, July 8, 1980 (45 FR 45924).

The rules of § 601.601(a)(3) of the "Statement of Procedural Rules" (26 CFR Part 601) shall apply with respect to the public hearing. Persons who have submitted written comments within the time prescribed in the notice of proposed revocation and who also desire to present oral comments at the hearing on the proposed revocation should submit an outline of the comments to be presented at the hearing and the time they wish to devote to each subject by October 24, 1980. Each speaker will be limited to 10 minutes for an oral presentation exclusive of time consumed by questions from the panel for the Government and answers to these questions.

Because of controlled access restrictions, attendees cannot be admitted beyond the lobby of the Internal Revenue Building until 9:45 a.m.

An agenda showing the scheduling of speakers will be made after outlines are received from the speakers. Copies of the agenda will be available free of charge at the hearing.

This document does not meet the criteria for significant regulations set forth in paragraph 8 of the Treasury Directive for improving government regulations appearing in the **Federal Register** for Wednesday November 8, 1978.

By direction of the Commissioner of Internal Revenue:

Robert A. Bley,

Director, Legislation and Regulations Division.

[FR Doc. 80-29613 Filed 9-23-80; 8:45 am]

BILLING CODE 4830-01-M

[LR-58-79]

26 CFR Part 48

Tax-Free Sales of Articles To Be Used for, or Resold for, Further Manufacture; Public Hearing on Proposed Regulations

AGENCY: Internal Revenue Service, Treasury.

ACTION: Notice of hearing on proposed regulations.

SUMMARY: This document provides notice of a public hearing on proposed regulations relating to tax-free sales of articles to be used for, or resold for, further manufacture.

DATES: The public hearing will be held on October 28, 1980, beginning at 10:00 a.m. Outlines of oral comments must be delivered or mailed by October 14, 1980.

ADDRESSES: The public hearing will be held in the I.R.S. Auditorium, Seventh Floor, 7400 Corridor, Internal Revenue Building, 1111 Constitution Avenue, N.W., Washington, D.C. The outlines should be submitted to the Commissioner of Internal Revenue, Attn: CC:LR:T (LR-58-79), Washington, D.C. 20224.

FOR FURTHER INFORMATION CONTACT: Charles Hayden of the Legislation and Regulations Division, Office of Chief Counsel, Internal Revenue Service, 1111 Constitution Avenue, N.W., Washington, D.C. 20224, 202-566-3935, not a toll-free call.

SUPPLEMENTARY INFORMATION: The subject of the public hearing is proposed regulations under section 4221 of the Internal Revenue Code of 1954. The proposed regulations appeared in the **Federal Register** for Wednesday, July 2, 1980 (45 FR 44965).

The rules of § 601.601(a)(3) of the "Statement of Procedural Rules" (26 CFR Part 601) shall apply with respect to the public hearing. Persons who have submitted written comments within the time prescribed in the notice of proposed rulemaking and also desire to present oral comments at the hearing on the proposed regulations should submit an outline of oral comments to be presented at the hearing and the time they wish to devote to each subject by October 14, 1980.

Each speaker will be limited to 10 minutes for an oral presentation exclusive of time consumed by questions from the panel for the Government and answers to these questions.

Because of controlled access restrictions, attendees cannot be admitted beyond the lobby of the Internal Revenue Building until 9:45 a.m.

An agenda showing the scheduling of the speakers will be made after outlines are received from the speakers. Copies of the agenda will be available free of charge at the hearing.

This document does not meet the criteria for significant regulations set forth in paragraph 8 of the Treasury Directive on improving government regulations appearing in the **Federal Register** for Wednesday, November 8, 1978.

By direction of the Commissioner of Internal Revenue.

Robert A. Bley,

Director Legislation and Regulations Division.

[FR Doc. 80-29614 Filed 9-23-80; 8:45 am]

BILLING CODE 4830-01-M

26 CFR Part 51

Interim Rule for Determining Base Prices for Tier 2 and Tier 3 Oil

AGENCY: Internal Revenue Service, Treasury.

ACTION: Proposed rulemaking cross-reference to temporary regulations.

SUMMARY: In the Rules and Regulations portion of this **Federal Register**, the Internal Revenue Service is issuing temporary excise tax regulations relating to title I of the Crude Oil Windfall Profit Tax of 1980. The text of those temporary regulations also serves as the comment document for this proposed rulemaking.

DATE: Written comments and requests for a public hearing must be delivered or mailed by November 24, 1980.

ADDRESS: Send comments and requests for a public hearing to: Commissioner of Internal Revenue, Attention: CC:LR:T (LR-142-80), Washington, DC 20224.

FOR FURTHER INFORMATION CONTACT: David B. Cubeta of the Legislation and Regulations Division, Office of the Chief Counsel, Internal Revenue Service, 1111 Constitution Avenue, N.W., Washington, DC 20224 (Attention: CC:LR:T) (202-566-3297).

SUPPLEMENTARY INFORMATION: The temporary regulations in the Rules and Regulations portion of this issue of the **Federal Register** amend part 150 of title 26 of the Code of Federal Regulations. The final regulations, which are proposed to be based on the temporary regulations, would amend 26 CFR Part 51.

For the text of the temporary regulations, see FR Doc. 80-29588 (T.D. 7720) published in the Rules and Regulations portion of this issue of the **Federal Register.**

Comments and Requests for a Public Hearing

Before adoption of the final regulations, consideration will be given to any written comments that are submitted (preferably six copies) to the Commissioner of Internal Revenue. All comments will be available for public inspection and copying. A public hearing will be held upon written request to the Commissioner by any person who has submitted written comments. If a public hearing is held, notice of the time and place will be published in the **Federal Register.**

Jerome Kurtz,

Commissioner of Internal Revenue.

[FR Doc. 80-29589 Filed 9-19-80; 4:34 pm]

BILLING CODE 4830-01-M

LIBRARY OF CONGRESS

Copyright Office

37 CFR Part 202

Registration of claims to Copyright; Notice of Termination of Inquiry Regarding Blank Forms

AGENCY: Library of Congress, Copyright Office.

ACTION: Notice of termination of inquiry.

SUMMARY: This notice of termination of inquiry is issued to advise the public that the Copyright Office of the Library of Congress is closing docket RM 79-6 without further action and does not intend to institute additional rulemaking proceedings at this time on the specific subject of registration of claims to copyright in "blank forms." "Blank forms" are works defined in existing Copyright Office regulations, 37 CFR 202.1(c) as "forms * * * which are designed for recording information and which do not in themselves convey information." The Copyright Office may propose a rewording of the regulation in connection with a later rulemaking proceeding on noncopyrightable subject matter generally, but this rewording would not be intended to change the principle of the present regulation that registration cannot be made for mere blank forms.

FOR FURTHER INFORMATION CONTACT: Dorothy Schrader, General Counsel, Copyright Office, Library of Congress, Washington, D.C. 20559. Telephone (202) 287-8380

SUPPLEMENTARY INFORMATION: Existing Copyright Office regulations preclude registration of claims to copyright in certain works that are not subject to copyright. Blank forms are included in this category of noncopyrightable works.

The following are examples of works not subject to copyright and applications for registration of such works cannot be entertained:

(a) * * *

(b) * * *

(c) Blank forms, such as time cards, graph paper, account books, diaries, bank checks, score cards, address books, report forms, order forms and the like, which are designed for recording information and do not in themselves convey information. [37 CFR 202.1(c)]

On December 5, 1979, the Copyright Office published a notice of inquiry (44 FR 69977) advising the public of its intention to review registration practices concerning blank forms. The notice cited several recent cases where courts held copyrightable works that some might consider to fall within the broad language of the blank form regulation.

As we stated in the notice, these cases do not conflict directly with the regulation since the Copyright Office actually registered the works. We also announced a modification of our practices with respect to answer sheets, in response to the decision in *Harcourt, Brace and World, Inc., v. Graphic Controls Corp.*, 329 F. Supp. 517 (S.D.N.Y. 1971). We elicited public comment, views and information to assist us in a review of the validity of the blank form regulation under the new Copyright Act and relevant judicial precedent.

Specifically, the notice of inquiry requested comments on whether 37 CFR 202.1(c) should be amended to state simply that works which are designed for recording information and do not convey information are not copyrightable, whether the existing regulation's list of examples should be revised, or whether the regulation should be otherwise changed. We also solicited comments respecting Copyright Office practices in the case of works that contain small amounts of traditional authorship. Comments were to be filed on or before January 31, 1980.

Sixteen responses were submitted to the Copyright Office. Except for one brief reply from a student and one lengthy comment from counsel for the defendant in *Harcourt, Brace and World, Inc. v. Graphic Controls Corp., Supra*, all coments were filed either by designers of business forms, data processing forms, standardized tests, bank forms, hospital forms, or intrument charts, etc. or by counsel for such clients. All comment letters advocated liberalization of Copyright Office policy with respect to claims to copyright in blank forms with the exception of the one from counsel for the defendant in the *Harcourt* case.

The Copyright Office has carefully considered each of the responses to its notice of inquiry, as well as the legal and policy reasons underpinning its blank form regulation. Based on this review, the Copyright Office has concluded that the principle of the existing regulation remains valid under the current Copyright Act. An item that serves merely as means for recording information and does not itself convey information or contain original pictorial expression does not constitute copyrightable subject matter.

The Copyright Office is charged with administering the provisions of the Copyright Act, 17 U.S.C. 101 et. seq. (1976), and with issuing regulations consistent with the Act for the administration of its duties, (17 U.S.C. 702). We have no authority to promulagate practices inconsistent with the Act nor to register claims to copyright for works outside the scope of federal statutory protection, (17 U.S.C. 410).

The Act clearly limits the subject matter of copyright to original works of authorship (17 U.S.C. 102(a)), and excludes from copyright protection "any idea, procedure, process, system, method of operation, concept, principle, or discovery, regardless of the form in which it is described, explained, illustrated, or embodied in [a] work," (17 U.S.C. 102(b)). This means that copyright may be claimed only in the "expression" embodied in a work of authorship, and not in its "idea." [*Mazer* v. *Stein*, 347 U.S. 201 (1954)]

The House Report accompanying the 1976 copyright revision bill states that Section 102(b) "in no way enlarges or contracts the scope of copyright protection under the [previous 1909 copyright] law. Its purpose is to restate, in the context of the new single Federal system of copyright, that the basic dichotomy between [copyrightable] expression and [uncopyrightable] idea(s) remains unchanged." [H.R. Rep. No. 94–1476, 94th Cong. 2d. Sess., at 57 (1976)]. Moreover, the legislative history indicates that Congress intended to maintain the same standard of original authorship that had been established under the previous copyright law. [S. Rep. No. 94–473, 94th Cong. 1st Sess., at 50 (1975)] Thus, earlier case law remains valid to define the scope and applicability of the principle embodied in the blank form regulation.

These statutory provisions, coupled with relevant case law, establish that a work which lacks even a minimal amount of original, creative expression should be denied registration regardless of whether it embodied a new or original idea. *See Bailie* v. *Fisher*, 258 F. 2d 425 (D.C. Cir. 1958). Conversely, a work that evidences more than a minimal amount of original, creative expression should be accepted for registration even though it contains an uncopyrightable idea, procedure or process. Copyright registration does not necessarily mean that every element of the registered work is subject to copyright.

These principles, although sometimes misunderstood, are firmly established by case law involving blank forms. In the early case of *Baker* v. *Seldon*, 101 U.S. 99 (1879), the United States Supreme Court held that Selden's copyright on a book explaining a bookkeeping system that included blank forms with ruled lines and headings did not preclude another from publishing a book containing similar forms to achieve the same result. The court reasoned that

> * * * To give to the author of the book an exclusive property in the art described therein, when no examination of its novelty has every been officially made, would be a surprise and a fraud upon the public. That is the province of letters-patent, not of copyright. The claim to an invention or discovery of an art or manufacture must be subjected to the examination of the Patent Office before an exclusive right therein can be obtained; and it can only be secured by a patent from the government.
> [101 U.S. at 102]
>
> * * * * *
>
> The conclusion to which we have come is, that blank account-books are not the subject of copyright; and that the mere copyright of Seldon's book did not confer upon him the exclusive right to make and use account-books, ruled and arranged as designated by him and described and illustrated in said book.
> [101 U.S. at 107]

The *Baker* case and its progeny are embodied in the longstanding practice of the Copyright Office to deny registration of a claim in a form designed merely to record information if that form contains no original literary or artistic expression (i.e., it is "blank"). If a work does evidence at least an appreciable amount of amount of such original, creative expression, the Copyright Office will register a claim, regardless of whether or not the work also contains uncopyrightable elements designed for the simple recordation of information. For example, we commonly register contracts, insurance policies, and other textual documents, as well as bank checks with pictorial or artistic authorship and the like, even though such works are designed, in part, to record information. It is the province of the courts to adjudicate the extent of protection accorded such a registered claim.

Our further review of the cases cited in our original notice of inquiry (44 FR 69977) leads us to conclude that they do not warrant modification of our practices respecting blank forms. Those cases, which some may interpret as inconsistent with the blank form regulation, involve works that were registered by the Office on the basis of sufficient original, creative expression, notwithstanding their form aspect. In each of the cases, the respective court affirmed the copyrightability of the integrated work, on grounds that it possessed original literary or artistic authorship. [*Edwin K. Williams & Co. v. Edwin K. Williams & Co.—East*, 542 F. 2d 1053 (1976) (account books containing several pages of instructions on use of forms and advice on management of service stations); *Manpower, Inc. v. Temporary Help of Harrisburg, Inc.*, 246 F. Supp. 788 (E. D. Pa. 1965) (vacation

schedule forms containing original art work and arrangements); *Professional Systems & Supplies, Inc. v. Databank Supplies & Equipment Co., Inc.*, 202 U.S.P.Q. 693 (W.D. Okla. 1979) (forms for promissory notes containing directions for use); *Cash Dividend Check Corp. v. Davis*, 247 F. 2d 458 (9th Cir. 1957) (check with text describing a stamp-check plan to convert savings stamps into cash); *Frederick Chusid & Co. v. Marshall Leeman & Co.*, 326 F. Supp. 1043 (S.D.N.Y. 1971) (multipage "personal data" form).]

One additional case, *Norton Printing Co. v. Augustana Hospital*, 155 U.S.P.Q. 133 (N.D. Ill. 1967), while denying defendant's motion to dismiss and finding that medical laboratory test forms registered by the Office in fact conveyed information, contained dicta questioning the Copyright Office's regulation. The court opined that our distinction between works that convey information and are therefore registrable, and those which merely record information and are not registrable "would appear to be without foundation in the Copyright Act or in Article I, Section 8 of the Constitution, which generally provides for copyright creation and protection. It is argued that where originality and intellectual effort exist on the creation or design of forms, copyright protection shoud be available as it is to other 'writings,' such as commercial circus posters, mass-produced lamp basis, and cartoon figures." [155 U.S.P.Q. at 134, citing *Nimmer on copyright*, § 37.31 at 153 (1966).]

The *Norton* court found it unnecessary to repudiate the principle of the regulation in deciding the case. Moreover, its criticism of the Copyright Office practice seems misplaced. The court apparently assumed that the Copyright Office's denial of registration for mere blank forms is based upon the perceived intended use in recording information.

The Copyright Office does not apply the regulation that way. We apply a standard consistent with that applied to all works submitted for registration: does the work evidence an appreciable quantum of original, creative expression? If so, the work is treated as a proper subject of copyright, and will be considered for registration. Thus, our blank form regulation does not preclude registration of any genre of works *per se;* we examine each form on the basis of whether or not it contains a sufficient amount of original literary or artistic expression to be entitled to copyright protection.

The Office practice of denying registration for forms that lack a sufficient quantity of creative authorship is strongly supported by case law precedent. *Brown Instrument Co. v. Warner*, 161 F. 2d 910 (D.C. Cir. 1947) (graphic temperature-pressure charts properly refused registration); *Taylor Instrument Co. v. Fawley-Brost Co.*, 139 F. 2d 98 (7th Cir. 1943), *cert. denied*, 321 U.S. 785 (1944) (temperature chart not copyrightable); *Time-Saver Check, Inc. v. Deluxe Printers, Inc.* 178 U.S.P.Q. 510 (N.D. Tex. 1973) (blank checks and attached carbon forms lack sufficient creative authorship to be copyrightable); *Aldrich v. Remington Rand, Inc.*, 52 F. Supp. 732 (N.D. Tex. 1942) (losseleaf tax record forms held not subject to copyright).

Neither the instant comment letters nor our review of case law has revealed any contrary case authority. Moreover, the most recent decision on point, firmly upholds the validity of the blank form regulation.

John H. Harland Co. v. Clarke Checks, Inc., Civ. No. C 79–1025 A (N.D. Ga., Mar. 25, 1980), involved checks that were registered by the Copyright Office on the basis of original pictorial designs. However, the Harland Company argued that the copyright also protected its Memory Stub products. These consist of a perforated stub placed between the permanent checkbook stub and the check in a manner that allows the user to remove the stub from the checkbook and record the check transaction on it.

The court found that the defendant copied only the Harland Memory Stub system; it did not copy the original pictorial material on which registration was premised. The court granted defendant's motion for partial summary judgment and denied plaintiff's cross-motion based, in part, upon its conclusion that plaintiff's Memory Stub products are not subject to copyright protection. In so doing, the Court expressly reaffirmed the validity of Copyright Office regulation 37 CFR, § 202.1(c) covering the noncopyrightability of blank forms such as bank checks which are designed for recording information and do not in themselves convey information.

The court found that Harland's Memory Stub, like the accounting forms in *Baker v. Selden*, is a new system for recording check book entries and is not subject to copyright protection because it does not convey any additional information beyond that conveyed in an ordinary bank check.

This court has concluded that the reasoning expressed in Baker v. Selden controls in the case at bar. What the plaintiff's Memory Stub product actually represents is a new system for recording checkbook entries. As such, it is not subject to copyright protection.

* * * * *

In the case at bar, the plaintiff's Memory Stub check does not convey any additional information other than that which is contained in an ordinary bank check, which neither party contends is copyrightable. I contains no instructions other than specifying "Pay To" and "For" lines, as well as indicating spaces for the date and dollar amount. It is apparent that the plaintiff is attempting to assert copyright protection for the concept of the removable stub itelf; and the court cannot say that granting the plaintiff what is in effect monopoly rights over this concept "cannot hamper the business world in its use of bank checks". [Civ. No. C 79–1025 A, at 4–5. (Citations omitted)]

Comment letters submitted in response to the Copyright Office notice of inquiry on blank forms presented no persuasive arguments against the validity of regulation 37 CFR 202.1(c). Most respondents argued that much time and effort is expended in creating or designing forms, and that this effort per se is worthy of copyright protection. Several averred that the arrangement of lines, heading, and spaces on a form represents a creative effort that should be entitled to protection. The John Harland Company, plaintiff in the aforementioned case, argued that the regulation is not warranted by *Baker v. Selden. (John H. Harland Co. v. Clarke Checks, Inc. supra,* has been decided since the comment letters were submitted. The court found *Baker v. Selden* controlled its decision.) Others, including Brownstein, Zeidman and Schomar law offices, attested to the usefulness of forms in facilitating business operations. Some responses suggested that the regulation be amended to state simply the criterion of conveying information, without listing examples of non-protectible formats.

The comment from counsel for defendant in *Harcourt, Brace & World, Inc. v. Graphic Controls Corporation*, 329 F. Supp. 517 (S.D.N.Y. 1971) argued that the regulation should be strengthened and supplemented by a procedure requiring the applicant to specify exactly which portion of the work is original and expressly disclaim copyright in the portion that contains common information and/or does not convey information. The Examiner would be obligated to insist that this disclaimer be made, consistent with a regulation that would continue to deny registration for mere blank forms.

The Copyright Office has concluded that its practice accurately reflects the principles of statutory and case law. We make subject matter determinations of registrability solely on the basis of the

original, creative expression (if any) embodied in the works submitted for registration. The ideas, however original, which may be embodied in the work, are not copyrightable. Therefore, the Office has decided to terminate its notice of inquiry and to follow its long-standing practice with respect to blank forms.

In a later proceeding we will deal with noncopyrightable subject matter in general. The comments received in connection with Docket Rm79-6 will be considered again to the extent they suggest ways to clarify the regulation without changing its basic principle.

(17 U.S.C. 702, 410)

Dated: September 12, 1980.

David Ladd,

Register of Copyrights.

Approved.

Daniel J. Boorstin,

The Librarian of Congress.

[FR Doc. 80-29549 Filed 9-23-80; 8:45 am]

BILLING CODE 1410-03-M

ENVIRONMENTAL PROTECTION AGENCY

40 CFR Part 52

[FRL 1615-1]

Commonwealth of Virginia; Proposed Revision of the Virginia State Implementation Plan

AGENCY: Environmental Protection Agency.

ACTION: Proposed rule.

SUMMARY: The Commonwealth of Virginia has submitted several revisions to amend the regulations for the Control and Abatement of Air Pollution. These revisions to the Virginia State Implementation Plan (SIP) include changes to Part IV, Emission Standards for Particulate Emissions from Fuel Burning Equipment, (Rule EX-3) and to Part I, Definitions. The revisions were submitted August 14, 1975, June 16, 1976, and September 21, 1979.

DATE: Comments must be submitted on or before October 24, 1980.

ADDRESSES: Copies of the proposed SIP revisions and the accompanying support documents are available for inspection during normal business hours at the following offices:

U.S. Environmental Protection Agency, Air Programs Branch, Curtis Building, 6th & Walnut Streets, Philadelphia, PA 19106, ATTN: Patricia Sheridan

Virginia State Air Pollution Control Board, Room 1106, Ninth Street Office Building, Richmond, VA 23219, ATTN: William Meyer, Executive Director

Public Information Reference Unit, Room 2922—EPA Library, U.S. Environmental Protection Agency, 401 "M" Street, S.W. (Waterside Mall), Washington, D.C. 20460

All comments on the proposed revision submitted on or before 30 days of publication of this notice will be considered and should be directed to:

James E. Sydnor, Chief, DC, MD, VA Section (3AH11), Air, Toxics & Hazardous Materials Division, U.S. Environmental Protection Agency, Region III, 6th & Walnut Streets, Philadelphia, PA 19106, ATTN: AH009aVA

FOR FURTHER INFORMATION CONTACT: Carol D. Peters (3HA11), U.S. Environmental Protection Agency, Region III, 6th & Walnut Streets, Philadephia, Pennsylvania 19106, telephone number (215) 597-9139.

SUPPLEMENTARY INFORMATION: On August 14, 1975, June 16, 1976, and September 21, 1979, the Commonwealth of Virginia submitted revisions to the Virginia State Implementation Plan (SIP). Only the revisions dealing with changes to Part IV, Emission Standards for particulate Emissions from Fuel Burning Equipment (Rule EX-3) and two definitions from Part I will be reviewed at this time. All other parts in these submittals have been or will soon be dealt with in other Federal Register notices.

Background

The appropriate portions of the August 14, 1975 submittal were proposed in the **Federal Register** on November 19, 1975 (40 FR 53595) and on March 25, 1977 (42 FR 16446). The June 16, 1976 submittal was proposed in the **Federal Register** on February 8, 1977 (42 FR 7969).

The Commonwealth of Virginia submitted proof that the following public hearings were held:

Submittal date	Public hearing date	Locations
Aug. 14, 1975	May 12, 1975	Abingdon, Radford, Lynchburg, Federicksburg, Richmond, Virginia Beach, and Fairfax.
June 16, 1976	Jan. 12, 1976	Abingdon, Radford, Lynchburg, Federicksburg, Richmond, Virginia Beach, and Falls Church.
	March 22, 1976	Same as above.
Sept. 21, 1979	May 14, 1979	Same as above.
	July 16, 1979	Same as above.

These hearings were held in accordance with the public hearing and notice requirements of 40 CFR 51.4 and all relevant State procedural requirements.

Part I—Definitions

The two defiitions under consideration in this notice are "Rated Capacity" and "Total Capacity."

"Rated Capacity" was first submitted on June 16, 1976 and was proposed in the **Federal Register** on February 8, 1977. This definition was modified, in the September 21, 1979 submittal, so that good engineering judgment is to be used by the Board and owner in determining the rated capacity. This change is consistent with 40 CFR 52.01, and is being proposed for approval as written September 21, 1979.

"Total Capacity" was modified August 14, 1975, June 16, 1976, and September 21, 1979. The August 14, 1975 and June 16, 1976 changes were proposed previously (40 FR 53595, 42 FR 16446 and 42 FR 7969). The modification, as submitted September 21, 1979, restructures the sentence format. This is consistent with good grammatical practices and with 40 CFR 52.01 and is being proposed for approval as written September 21, 1979.

Part IV—(Rule EX-3)

The submittal of August 14, 1975 introduced a new numbering system. Sections 4.03.01 and 4.703.01 were combined and modified to make Section 4.30. Section 4.03.03 was modified to form § 4.31. Section 4.703.04 was deleted in 43 FR 38700, August 30, 1978, before it was proposed to be renumbered to Section 4.32.

The June 16, 1976 submittal modified § 4.30(a). Section 4.30(b) was deleted and a new § 4.30(b) was added. Section 4.31 was changed to § 4.32 and a new § 4.31 was added.

On September 21, 1979, Section 4.31 was deleted, § 4.30 was renumbered § 4.31 and a new § 4.30 was added. The new §§ 4.31(a) and (b) were modified, and §§ 4.31(c), (d) and (e) were added. Section 4.32(a) and (b) were modified and (c) was added. The September 21, 1979 submittal completely modified the previous regulations both administratively and substantively. Therefore, only §§ 4.30, 4.31 and 4.32 as written as of September 21, 1979 are being considered.

A summary of these regulations follows:

Regulation and Brief Description

4.30—Applicability and Designation of Affected Facility—added to specify the types of sources to which these provisions apply.

4.31—Standard for Particulate Matter—minor administrative changes to §§ 4.31(a) and (b). Sections 4.31(c), (d) and (e) are added to further clarify the emission standards.

4.32—Exceptions—minor administrative changes to §§ 4.32 (a) and (b). Section 4.32(c) was added to exempt intermittently operated gas, oil or coal-fired equipment from Section 4.31(c).

All of the above revisions have been reviewed and found to be acceptable except for Section 4.31(d)(3). The submittal of June 16, 1976 changed the standards for particulate matter (Section 4.30(a)). The criteria were revised to cover smaller categories of sources, while at the same time, the emission ratio was changed to allow slightly higher particulate emissions. Section 4.30(b), in the June 16, 1976 submittal, determines the maximum allowable particulate emissions to be the product of the total capacity and the emission ratio. Section 4.30 was renumbered to Section 4.31 in September 21, 1979 submittal. Minor administrative changes were made to §§ 4.31(a) and (b). Section 4.31(c) was added for determining allowable particulate emissions for an affected facility operating at less than total capacity. Section 4.31(d) was added for the determination of efficiency factors for collection equipment. Section 4.31(e) was added to designate the portion of the emission contribution allocated for each of the fuel burning equipment units of the affected facility. The addition of 4.30, in the September 21, 1979 submittal, makes Rule EX-3 applicable to all fuel burning equipment at the plant. Section 4.32(c) was added in the September 21, 1979 submittal. This exempted all fuel burning equipment units with intermittently operated gas, oil or coal-firing equipment from complying with Section 4.31(c). All the above changes comply with Federal guidelines except § 4.31(d)(3). The control strategy demonstrated that the National Ambient Air Quality Standards for Total Suspended Particulates (TSP) will not be violated by the increased emissions allowed by this revision.

The Commonwealth, in § 4.31(d)(3), lists the following substitute criteria for determining the efficiency factor for collection equipment:

Manufacturer's specifications, emission test results, operating conditions (such as percent ash in coal, gradiation of particulate entering collector, variations in gas volume and resulting velocity in collector due to boiler rating, cleaniness of boiler surfaces, furnace temperature and amount of excess air).

All of the substitute criteria shown above (as excerpted from the September 21, 1979 submittal), with the exception of emission test results, contain inherent variations in quality control which do not present an accurate represenation of collection efficiency. All of the conditions listed do affect the collection efficiency of mechanical collectors. However, there is only one way to accurately quantify the effect of any operational change, and that is by running a series of stack tests over the range of variables likely to be encountered during normal operations. Therefore, these criteria should be deleted in order to make the regulation acceptable.

Therefore, the Administrator is proposing that § 4.31(d)(3) be disapproved.

The public is invited to submit, to the address stated above, comments on the amendments to the regulations as a revision of the Virginia State Implementation Plan.

The Administrator's decision to approve or disapprove the proposed revision will be based on the comments received and on a determination of whether the amendment meets the requirements of Section 110(a)(2) of the Clean Air Act and 40 CFR Part 51, Requirements for Preparation, Adoption, and Submittal of State Implementation Plans.

Under Executive Order 12044, EPA is required to judge whether a regulation is "significant" and, therefore, subject to the procedural requirements of the Order or whether it may follow other specialized development procedures. EPA labels these other regulations "specialized." I have reviewed this regulation and determined that it is a specialized regulation not subject to the procedural requirements of Executive Order 12044.

(42 U.S.C. §§ 7401-642)

Dated: September 11, 1980.

Jack J. Schramm,

Regional Administrator.

[FR Doc. 80-29578 Filed 9-23-80; 8:45 am]

BILLING CODE 6560-01-M

---

40 CFR Part 52

[FRL 1615-3]

Approval and Promulgation of Implementation Plans: Kansas

AGENCY: Environmental Protection Agency (EPA).

ACTION: Notice of availability.

SUMMARY: The State of Kansas has submitted a draft State Implementation Plan (SIP) revision consisting of the Kansas regulations dealing with permits for the construction and operation of new or modified major stationary sources to fulfill the requirements of the Clean Air Act Amendments of 1977. Interested persons are invited to examine the Kansas SIP revision and submit comments on it. A notice of proposed rulemaking describing the revision will be published in the **Federal Register** at a later date. The period for submittal of comments will extend for 30 days after publication of the proposed rulemaking.

ADDRESSES: Comments should be sent to Jane E. Ratcliffe, Air Support Branch, Environmental Protection Agency, 324 East 11th Street, Kansas City, Missouri 64106. The Kansas submission may be examined during normal business hours at the above address and also at the following locations:

Environmental Protection Agency, Public Information Reference Unit, Room 2922, 401 M Street, S.W., Washington, D.C. 20460.

Kansas Department of Health and Environment, Forbes Field, Topeka, Kansas 66620.

FOR FURTHER INFORMATION CONTACT: Jane E. Ratcliffe, (816) 374-3791, FTS 758-3791.

SUPPLEMENTARY INFORMATION: Section 172 of the Clean Air Act as amended in 1977 requires that states revise their SIPs to provide for the attainment of National Ambient Air Quality Standards (NAAQS) in areas which have been designated as nonattainment. The State of Kansas has submitted a draft SIP revision in response to requirements of the Clean Air Act.

The purpose of this notice is to announce that the revision has been submitted and is available for public inspection. The public is encouraged to submit written comments on it. A description of the draft revision and proposed EPA action on the draft revision will be published in the **Federal Register** as part of the proposed rulemaking at a later date. (42 U.S.C. 7410)

Dated: September 12, 1980.

David A. Wagoner,

Acting Regional Administrator.

[FR Doc. 80-29551 Filed 9-23-80; 8:45 am]

BILLING CODE 6560-01-M

40 CFR Part 123

[FRL 1614-1]

Louisiana: Submission for Approval of Interim Authorization Plan, Phase I, Hazardous Waste Management Program

AGENCY: Environmental Protection Agency.

ACTION: Notice of public comment period and of a public hearing.

SUMMARY: In the May 19, 1980 **Federal Register** (45 FR 33063), the Environmental Protection Agency promulgated regulations, pursuant to Subtitle C of the Resource Conservation and Recovery Act of 1976 (as amended), to protect human health and the environment from the improper management of hazardous 6 months from the date of promulgation, were provisions for a transitional stage in which states would be granted interim program authorization. The interim authorization program will be implemented in two phases corresponding to the two stages in which an underlying Federal program will take effect.

As noted in the May 19, 1980 **Federal Register**, copies of state submittals for Phase I Interim Authorization are to be available for public inspection and comment. The purpose of this notice is to announce the availability of the Louisiana submittal for Phase I Interim Authorization for public hearing to be held on Louisiana's application. A listing and a description of requirements for interim authorization are stated in 40 CFR Section 123, Subpart F.

DATE: Comments on the Louisiana Interim Authorization application must be received by October 30, 1980.

Public hearing: Thursday, October 23, 1980 at 7:00 p.m.

ADDRESSES: Copies of the Phase I Interim Authorization plan are available at the following address for inspection and copying:

Environmental Protection Agency, Region VI, Library, 28th floor, 1201 Elm Street, Dallas, Texas 75270, (214) 767-7341.

Louisiana Department of Natural Resources, Office of Environmental Affairs, 6th floor, P.O. Box 44066, 625 North Fourth Street, Baton Rouge, Louisiana 70804, (504) 342-1265.

Written comments should be sent to: Environmental Protection Agency, Region VI, Air and Hazardous Materials Division, Attention: Rena McClurg, Solid Waste Branch, 1201 Elm Street, Dallas, Texas 75270, (214) 767-2645.

PUBLIC HEARING LOCATION: EPA will hold a public hearing on Louisiana's application for Interim Authorization in the Conservation Hearing Room, 1st floor, State Land and Natural Resources Building, 6125 North Fourth Street, Baton Rouge, Louisiana.

FOR FURTHER INFORMATION CONTACT: Rena McClurg, Solid Waste Branch, U.S. EPA, Region VI, Dallas, Texas 75270, (214) 767-2645.

Dated: September 18, 1980.

Adlene Harrison,

Regional Administrator.

[FR Doc. 80-29266 Filed 9-23-80; 8:45 am]

BILLING CODE 6560-01-M

---

40 CFR Parts 162 and 163

[OPP-00128; FRL 1613-7]

FIFRA Scientific Advisory Panel; Open Meeting

AGENCY: Environmental Protection Agency (EPA).

ACTION: Notice.

SUMMARY: There will be a three-day meeting of the Federal Insecticide, Fungicide, and Rodenticide Act (FIFRA) Scientific Advisory Panel to discuss Subpart M: Data Requirements for Biorational Pesticides of the Guidelines for Registering Pesticides in the United States. The meeting will be open to the public.

DATE: Tuesday, Wednesday, and Thursday, October 7, 8, and 9, 1980, from 9:00 a.m. to 5:00 p.m. daily.

ADDRESS: The meeting will be held at the: Holiday Inn, 2460 Eisenhower Drive, Alexandria, VA 22314.

FOR FURTHER INFORMATION CONTACT: H. Wade Fowler, Jr., Executive Secretary, FIFRA Scientific Advisory Panel (TS-766), Office of Pesticide Programs, Rm. 803, Crystal Mall, Building No. 2, 1921 Jefferson Davis Highway, Arlington, VA 22202, 703-557-7560.

SUPPLEMENTARY INFORMATION: The agenda for this meeting is:

1. Formal review by the Panel on proposed rulemaking concerning Subpart M: Data Requirements for Biorational Pesticides of the Guidelines for Registering Pesticides in the United States;

2. Completion of any unfinished business from previous Panel meetings; and

3. In addition, the agency may present status reports on other ongoing programs of the Office of Pesticide Programs.

Copies of draft documents concerning item 1 may be obtained by contacting: Dr. William Preston, Hazard Evaluation Division (TS-769), Rm. 800, Crystal Mall, Building No. 2, at the address given above, telephone: 703-557-1405.

Any member of the public wishing to attend or submit a paper should contact Dr. H. Wade Fowler, Jr., at the address or phone listed above to be sure that the meeting is still scheduled and to confirm the Panel's agenda. Interested persons are permitted to file written statements before or after the meeting, and may, upon advance notice to the Executive Secretary, present oral statements to the extent that time permits. All statements will be made part of the record and will be taken into consideration by the Panel in formulating comments or in deciding to waive comments. Persons desirous of making oral statements must notify the Executive Secretary and submit the required number of copies of a summary no later than October 3, 1980.

Individuals who wish to file written statements are advised to contact the Executive Secretary in a timely manner to be instructed on the format and the number of copies to submit to ensure appropriate consideration by the Panel.

The tentative date for the next Scientific Advisory Panel meeting is November 12, 13, and 14, 1980.

(Sec. 25(d), as amended, (92 Stat. 819; 7 U.S.C. 136); Sec. 10(a)(2), 86 Stat. 770 (5 U.S.C. App.))

Dated: September 16, 1980.

Edwin L. Johnson,

Deputy Assistant Administrator for Pesticide Programs.

[FR Doc. 80-29480 Filed 9-23-80; 8:45 am]

BILLING CODE 6560-01-M

FEDERAL COMMUNICATIONS COMMISSION

47 CFR Part 73

[BC Docket No.80-476; RM-3601]

FM Broadcast Station in Hudson, Mich.; Proposed Changes in Table of Assignments

AGENCY: Federal Communications Commission

ACTION: Notice of proposed rulemaking.

SUMMARY: Action taken herein proposes the assignment of Channel 249A to Hudson, Michigan, in response to a petition filed by E. Eugene McCoy, Jr. The proposed channel could provide a first local aural broadcast service to Hudson.

DATES: Comments must be filed on or before November 7, 1980, and reply comments must be filed on or before November 28, 1980.

ADDRESSES: Federal Communications Commission, Washington, D.C. 20554.

FOR FURTHER INFORMATION CONTACT: Montrose H. Tyree, Broadcast Bureau, (202) 632-9660.

SUPPLEMENTARY INFORMATION:

Adopted: September 2, 1980.

Released: September 15, 1980.

In the matter of Amendment of § 73.202(b), Table of Assignments, FM Broadcast Station, (Hudson, Michigan).

By the Chief, Policy and Rules Division:

1. *Petitioner, Proposal, Comments:*

(a) A petition for rule making [1] was filed by E. Eugene McCoy, Jr. ("petitioner"), proposing the assignment of Channel 249A to Hudson, Michigan, as that community's first FM assignment. Petitioner states he will apply for the channel, if assigned. Comments were filed by Defiance Broadcasting Company petitioner for Channel 251 in Defiance, Ohio (RM-3311, BC-Docket 80-120).

(b) Channel 249A can be assigned to Hudson in compliance with the minimum distance separation requirements provided the transmitter is located 10.3 kilometers (6.4 miles) southeast of Hudson.

2. *Community Data:*

(a) *Location:* Hudson in Lenawee County, is located approximately 99 kilometers (62 miles) south of Lansing.

(b) *Population:* Hudson—2,618[2] Lenawee County—81,951.

3. *Economic Consideration:* Petitioner states the population of Hudson has shown a steady growth pattern since 1960, which is expected to continue. He asserts that Hudson's economy is based on several small industries and businesses. Petitioner has submitted demographic and economic information in an effort to demonstrate the need for an FM assignment.

4. Petitioner contends that Hudson receives limited service from WABJ (AM), WRTE (FM), and WLEN (FM), licensed to Adrian, Michigan. The proposed assignment would provide a much needed service, addressing the needs of Hudson and the surrounding area. Petitioner recognizes that its proposal is mutually exclusive with the proposed assignment of Channel 251B to Defiance, Ohio, but urges us to assign a channel to Hudson since Defiance already has local service.

5. In comments, Defiance Broadcasting Company submitted engineering information to show that both assignments can be made in compliance with the Commission's separation requirements with transmitter site restrictions. Staff engineering analysis shows that a site restriction for Hudson of 10.3 kilometers (6.4 miles) southeast of the city could accommodate the Defiance proposal.

7. Since Hudson is located within 402 kilometers (250 miles) of the U.S. Canadian border, the proposed assignment of Channel 249A to Hudson, Michigan, requires coordination with the Canadian Government before it can be assigned.

8. In view of the fact that the proposed FM channel could provide a first local aural broadcast service to Hudson, the Commission proposes to amend the FM Table of Assignments, Section 73.202(b) of the Commission's Rules, with regard to Hudson, Michigan.

City	Channel No.	
	Present	Proposed
Hudson, Michigan		249A

9. Authority to institute rule making proceedings, showing required cut-off procedures, and filing requirements is contained in the attached Appendix and are incorporated by reference herein. Note: A showing of continuing interest is required by paragraph 2 of the attached Appendix before a channel will be assigned.

10. Interested parties may file comments on or before November 7, 1980, and reply comments on or before November 28, 1980.

11. For further information concerning this proceeding, contact Montrose H. Tyree, Broadcast Bureau, (202) 632-9660. However, members of the public should note that from the time a notice of proposed rule making is issued until the matter is no longer subject to Commission consideration or court review, all *ex parte* contacts are prohibited in Commission proceedings, such as this one, which involve channel assignments. An *ex parte* contact is a message (spoken or written) concerning the merits of a pending rule making other than comments officially filed at the Commission or oral presentation required by the Commission.

Federal Communications Commission.

Henry L. Baumann,

Chief, Policy and Rules Division, Broadcast Bureau.

Appendix

1. Pursuant to authority found in Sections 4(i), 5(d)(1), 303(g) and (r), and 307(b) of the Communications Act of 1934, as amended, and Section 0.281(b)(6) of the Commission's Rules, IT IS PROPOSED TO AMEND the FM Table of Assignments, Section 73.202(b) of the Commission's Rules and Regulations, as set forth in the *Notice of Proposed Rule Making* to which this Appendix is attached.

2. *Showings required.* Comments are invited on the proposal(s) discussed in the Notice of Proposed Rule Making to which this Appendix is attached. Proponent(s) will be expected to answer whatever questions are presented in initial comments. The proponent of a proposed assignment is also expected to file comments even if it only resubmits or incorporates by reference its former pleadings. It should also restate its present intention to apply for the channel if it is assigned, and, if authorized, to build the station promptly. Failure to file may lead to denial of the request.

3. *Cut-off procedures.* The following procedures will govern the consideration of filings in this proceeding.

(a) Counterproposals advanced in this proceeding itself will be considered, if advanced in initial comments, so that parties may comment on them in reply comments. They will not be considered if advanced in reply comments. (See § 1.420(d) of Commission Rules.)

(b) With respect to petitions for rule making which conflict with the proposal(s) in this Notice, they will be considered as comments in the proceeding, and Public Notice to this effect will be given as long as they are filed before the date for filing initial comments herein. If they are filed later than that, they will not be considered in connection with the decision in this docket.

4. *Comments and reply comments; service.* Pursuant to applicable procedures set out in Sections 1.415 and 1.420 of the Commission's Rules and Regulations, interested parties may file comments and reply comments on or before the dates set forth in the *Notice of Proposed Rule Making* to which this Appendix is attached. All submissions by parties to this proceeding or persons acting on behalf of such parties must be made in written comments, reply comments, or other appropriate pleadings. Comments shall be served on the petitioner by the person filing the comments. Reply comments shall be served on the person(s) who filed comments to which the reply is directed. Such comments and reply comments shall be accompanied by a certificate of service. (See § 1.420(a), (b), and (c) of the Commission Rules.)

5. *Number of copies.* In accordance with the provisions of Section 1.420 of the Commission's Rules and Regulations, an original and four copies of all comments, reply comments, pleadings, briefs, or other documents shall be furnished the Commission.

6. *Public inspection of filings.* All filings made in this proceeding will be available for examination by interested parties during regular business hours in the Commission's Public Reference Room at its headquarters, 1919 M Street, N.W., Washington, D.C.

[FR Doc. 80-29543 Filed 9-23-80; 8:45 am]

BILLING CODE 6712-01-M

[1] Public Notice of the petition was given on February 27, 1980, Report No. 1218.

[2] Population figures are taken from the 1970 U.S. Census.

47 CFR PART 73

[BC Docket No. 80-23; RM-3486]

FM Broadcast Stations in Blue Earth and St. James, Minn.; Petition for Rule Making Denied and Proceeding terminated

AGENCY: Federal Communications Commission.

ACTION: Report and order.

SUMMARY: Action taken herein denies the petition filed by Richard Rogers requesting the deletion of FM Channel 265A from Blue Earth, Minnesota, and its reassignment to St. James, Minnesota.

EFFECTIVE DATE: Non-Applicable.

ADDRESS: Federal Communications Commission, Washington, D.C. 20554.

FOR FURTHER INFORMATION CONTACT: Ira H. Smart or Mark N. Lipp, Broadcast Bureau, (202) 632-7792.

SUPPLEMENTARY INFORMATION:

Adopted: September 2, 1980.

Released: September 12, 1980.

By the Chief, Policy and Rules Division:

1. The Commission herein considers the *Notice of Proposed Rule Making*, adopted January 22, 1980, 45 FR 6971, which invited comments on a proposal to reassign Channel 265A from Blue Earth, Minnesota, to St. James, Minnesota, as that community's first Class A FM assignment, in response to a petition filed by Richard Rogers ("petitioner"). Supporting comments were filed by petitioner in which he reaffirmed his intention to file for the channel if assigned. Opposing comments were filed by Minn-Iowa Christian Broadcasting, Inc., ("MICB"), which indicated it would apply for the channel in Blue Earth if it were not deleted. Accordingly, we have decided to treat MICB's comments as a counterproposal. Residents of Blue Earth filed comments in support of a Christian broadcasting station in Blue Earth. Petitioner filed reply comments. MICB also filed reply comments.

2. Blue Earth (pop. 3,965),[1] in Faribault County (pop. 20,896), is located approximately 161 kilometers (100 miles) southwest of Minneapolis, Minnesota. It is served locally by daytime-only AM Station KBEW. It has one FM assignment, Channel 265A.[2] St. James (pop. 4,027), in Wantonwan County (pop. 13,298), is located approximately 199 kilometers (120 miles) southwest of Minneapolis, Minnesota. It has no local aural broadcast service or FM assignments.

3. Petitioner argues in his comments that St. James has slightly more people than does Blue Earth. In addition, petitioner notes that Blue Earth is the city of license of AM Station, KBEW, while St. James has no local outlet. Petitioner cites *South Pittsburg, Tenn., and Stevenson, Alabama*, Docket 20339, 40 FR 51040 (1975), to support its contention that St. James should not be deprived of an opportunity for a local radio outlet when Blue Earth already has a daytime-only AM station. Petitioner argues that while the present case is one of removing an assignment from one community for the purpose of assigning it to another, and not one of selecting between two communities for a completely new assignment, the same principles apply.

4. In comment, MICB states that it intends to apply for Channel 265A in Blue Earth to operate a Christian broadcasting station. MICB has submitted numerous letters of support for such a service from resident of Blue Earth. In addition, MICB notes that a denial of petitioner's request would not preclude the establishment of a first FM service at St. James since Channel 285A is available for use to St. James.

5. In reply, petitioner argues that MICB has overlooked the site restriction on Channel 285A which requires any transmitter site for Channel 285A to be located at least 4 miles northeast of St. James. Since this alternative has not been shown to be equivalent, the proposal should be dismissed, he argues.

6. In reply, MICB cites *St. Augustine, Florida, and Callahan, Florida* 46 RR 2d 1295 (1980), to support its position that where a petitioner requests the deletion of an assigned channel, the use of which in the community of assignment has been requested, the Commission places on the petitioner a heavier burden to demonstrate the need for the channel elsewhere than is imposed upon competing applicants. MICB argues that the petitioner has failed to meet this burden and adds that the location of a transmitter four miles outside of St. James would still enable the entire community of St. James to receive a city grade signal. Finally, MICB notes that petitioner has shown no substantive advantage whatsoever in having Channel 265A, instead of Channel 285A, assigned to St. James.

7. We have carefully considered the record in this proceeding and conclude that it would not be in the public interest to make the requested reassignment. Channel 285A is available to St. James, and the minimum distance separation requirements imposed on the use of this channel at St. James poses no bar to city-grade coverage thereof. Further, as noted by MICB, where petitioner requests the deletion of an assigned channel for which an interest has been expressed, a heavier burden rests on petitioner to demonstrate its greater need elsewhere. Since another channel is available and appears to be a suitable alternative, it is our opinion that petitioner has not met this burden. Although the Channel 285A proposal appears to be appropriate for St. James, we have no commitment that an application would be filed for its use. Therefore we decline to make the requested deletion and the proposed reassignment without prejudice to a refiling for a Channel 285A assignment to St. James.

8. Accordingly, pursuant to authority contained in § 4(i), 5(d)(1), 303(g) and (r), and 307(b) of the Communications Act of 1934, as amended, and § 0.281 of the Commission's Rules, it is ordered, That the petition filed by Richard Rogers, requesting the deletion of Channel 265A from Blue Earth, Minnesota and its reassignment to St. James, Minnesota is denied.

9. It is further ordered, That this proceeding is terminated.

10. For further information concerning this proceeding contact: Ira Smart, Broadcast Bureau (202) 632-7792.

Federal Communications Commission.

Henry L. Baumann,

Chief, Policy and Rules Division, Broadcast Bureau.

[FR Doc. 80-29545 Filed 9-23-80; 8:45 am]

BILLING CODE 6712-01-M

[1] Population figures are taken from the 1970 U.S. Census.

[2] Application has been received for this channel from Logos Communication, Inc. (File No. 800529 AB) and from Minn-Iowa Christian Broadcasting, Inc. (File No. 800324 AE).

---

47 CFR Part 73

[BC Docket No. 80-397; RM-3506]

FM Broadcast Stations in Uvalde, Crystal City and Pearsall, Tex.; Order Extending Time for Filing Comments and Reply Comments

AGENCY: Federal Communications Commission.

ACTION: Proposed rule, extension of comment period.

SUMMARY: This action extends the time for filing comments and reply comments in a proceeding involving the assignment of an FM channel to Uvalde, Texas. Petitioner, Sharon Hess, seeks the additional time to file her comments.

DATES: Comments must be filed on or before September 29, 1980, and reply comments on or before October 20, 1980.

ADDRESS: Federal Communications Commission, Washington, D.C. 20554.

FOR FURTHER INFORMATION CONTACT: Mark N. Lipp, Broadcast Bureau, (202) 632-7792.

SUPPLEMENTARY INFORMATION:

Adopted: September 15, 1980.

Released: September 19, 1980.

By the Chief, Policy and Rules Division:

1. On July 15, 1980, the Commission adopted a *Notice of Proposed Rule Making*, 45 FR 50373, published July 29, 1980, concerning the above captioned proceeding. The present dates for filing comments and reply comments are September 15, 1980, and October 6, 1980, respectively.

2. Sharon Hess, petitioner for an FM channel assignment to Uvalde, Texas, through counsel, has requested a two week extension of time in order to evaluate through engineering studies two possible approaches to obtaining a Uvalde assignment.

3. We believe that additional time to provide comments which would aid the Commission in resolving this proceeding is warranted.

4. Accordingly, it is ordered, that the dates for filing comments and reply comments in this proceeding are extended to and including September 29, and October 20, 1980, respectively.

5. Authority for this action is contained in Sections 4(i), 5(d)(1), and 303(r) of the Communications Act of 1934, as amended, and Section 0.281 of the Commission's Rules.

Federal Communications Commission.

Henry L. Baumann,

Chief, Policy and Rules Division, Broadcast Bureau.

[FR Doc. 80-29561 Filed 9-23-80; 8:45 am]

BILLING CODE 6712-01-M

---

47 CFR Part 90

[PR Docket No. 80-440; FCC 80-484]

Providing for Additional Technologies Which Can Improve the Efficiency of Radio Spectrum Use

AGENCY: Federal Communications Commission.

ACTION: Notice of inquiry.

SUMMARY: The Commission seeks public comment on what rule changes would be appropriate in its rules governing the land mobile radio services to accommodate the voluntary introduction and use of additional technologies that could lead to improved spectral efficiency. The Commission's intent here is to provide greater freedom and incentive for licensees to make selections that, while in their own self-interest, also lead to greater efficiency in spectrum usage.

DATE: Comments must be received on or before March 9, 1981, and Reply Comments must be received on or before May 11, 1981.

ADDRESSES: Send comments to: Federal Communications Commission, Washington, D.C. 20554.

FOR FURTHER INFORMATION CONTACT: Joseph Johnson, Private Radio Bureau (202) 632-6930.

SUPPLEMENTARY INFORMATION: Inquiry on Use of Narrowband Emissions in the Private and Public Land Mobile Services.

Adopted: August 1, 1980.

Released: September 9, 1980.

By the Commission:

Introduction

1. The Federal Communications Commission is considering amending its regulations governing private and public land mobile stations to accommodate the introduction and use of additional technologies that can improve the efficiency of radio spectrum use.[1] [2] Our purpose in issuing this Notice is to seek public comment on the Commission's basis for such action and what rule changes would be appropriate. It will be clear upon reading this Notice that it is not the Commission's intention to mandate the use of any particular technology, but rather to provide greater freedom and incentive for licensees to make selections that, while in their own best interest, also lead to greater efficiency in spectrum usage.

Background

2. The allocation of frequencies for what are now known as the land mobile radio services dates to the earliest years of the Commission. In Docket 3929, adopted October 13, 1937, the Commission set aside channels for police, special emergency, forestry, power, motion picture and relay press uses. In all, some 111 channels were allocated on frequencies as high as 150 MHz. In Docket 6651, the Commission created the 3 basic categories of private land mobile services: Public Safety, Industrial, and Land Transportation. In Dockets 8658 and 9046, the Commission set into motion the allocation of several low band (30-50 MHz) and high band (150 MHz) channels for the Domestic Public Land Mobile Radio Service (DPLMRS). By 1956, the Commission had set out rules for private and public land mobile uses of frequencies as high as 470 MHz, although the vast majority of licensees were operating in low band and high band. Also by 1956, the need for additional high band channels for both private and public stations had grown to the point where the Commission adopted rules which "split" the existing 60 kHz-wide channels into channels of 30 kHz width. In 1966, similar rules were adopted which split the 450 MHz channels from 50 kHz to 25 kHz. Subsequent to these actions the private 150 MHz channels (except Business Radio Service channels) were again split to create 15 kHz-spaced assignable frequencies (so-called "tertiary" channels), and the 450 MHz channels in the Business Radio Service were split to create assignable frequencies spaced 12.5 kHz apart for low power use on a secondary basis.

3. Despite the shift to higher frequencies in the spectrum and the splitting of channels to obtain more assignable frequencies, it became clear by the late 1960s that channel loading in urban areas was increasing so rapidly that additional steps would be necessary to accommodate the influx of new licensees. Therefore, in 1967, the Commission announced the initiation of a study to determine the feasibility of meeting the future needs of land mobile within spectrum then-allocated for UHF television broadcasting. As a result of this study and subsequent rulemaking actions, land mobile licensees in certain metropolitan areas were given access to frequencies which were shared with TV channels 14-20, (470-512 MHz). The land mobile services were also reallocated the bulk of frequencies which comprised TV channels 70-83 (806-947 MHz) for use nationwide.

4. Demand for land mobile radio facilities has grown steadily over the past decade. In the private land mobile services, application receipts for fiscal year 1981 are projected at approximately 300,000, compared to receipts of 115,000 in 1973. The total number of private land mobile radio transmitters is expected to double between 1980 and 1990, and to double again by the year 2000. Comparable growth has taken place in the DPLMRS, with an approximate annual growth of more than 15 percent in two-way mobile telephone service and substantially greater growth in one-way paging systems between 1966 and 1978. In 1976,

---

[1] The term 'technology' is used here to emphasize the generality with which the Commission wishes to approach this review of its rules. The term incudes, among other things, types of modulation, audio processing techniques, and channel access and sharing techniques.

[2] While the Commission in this Notice is specifically addressing the land mobile services, we anticipate that other services, such as Marine and Aviation, could also benefit from regulatory changes contemplated in this proceeding and may be specifically included at a later date.

the Commission began assigning channels in the 800 MHz band for private land mobile use. A total of 300 channels were made available immediately and 300 more channels were held in reserve.[3] In major metropolitan areas the strong demand for land mobile channels has resulted in the very rapid assignment of available channels, to the point where it has been requested that additional channels be released from the reserve pool. No matter what disposition is made of the reserve channels, it is clear that only short term relief will be provided in heavily congested areas such as Chicago, Los Angeles and New York. In the 150 and 450 MHz private and public bands, the quality of service available in metropolitan areas is decreasing as the number of users steadily increases, to the point where no additional communications capacity exists on many channels. Virtually no new private users can be accommodated on the 470 MHz channels because these are fully loaded in all cities where operation is permitted.

Alternatives for Accommodating Future Growth

5. There are essentially two regulatory avenues for accommodating future land mobile growth:

(i) Allocate more spectrum for land mobile use; or

(ii) Provide for the introduction of greater efficiencies in the use of spectrum already allocated for land mobile.

From the foregoing it is obvious that both of these approaches have been used in the land mobile services in the past, in the form of allocations/reallocations/sharing of spectrum and in the splitting of channels and introduction of trunking. If the land mobile services are to continue to grow and furnish the very diverse and important communications services which will be needed in the future, it will be necessary for one or both of these mechanisms to be used again relatively soon. In general, we believe it is preferable, and in the long term best interests of all services, to consider spectrum reallocations only after we have examined the feasibility of providing relief through the introduction of greater efficiencies in current allocations. In assessing the current situation in the land mobile services, we are, therefore, attempting in this proceeding to determine what, if any, improvements are possible within the current land mobile allocations.

[3] Fifty channels from the reserve pool were released August 3, 1978.

7. One way to promote greater land mobile spectrum efficiency would be to provide for the use of modulation types other than frequency modulation (FM), such as the single sideband suppressed carrier emission (SSB). Its radio frequency (RF) bandwidth is, for all practical purposes, the same as the bandwidth of the incoming voice waveform. In land mobile applications, this is approximately 3 kHz.[4] SSB is widely used in the U.S. and elsewhere in the HF (3–30 MHz) range of the spectrum at fixed and mobile stations in numerous radio services. An important limitation on the use of SSB is frequency tolerance. In order for an SSB signal to be intelligible, the SSB receiver needs to be tuned within about 100 Hz of the frequency of the SSB transmitter. Such tolerances are attainable in the low VHF (30–150 MHz) range. For fixed station operation, it is possible to extend the use of SSB into the UHF (300–3000 MHz) region, although the cost of equipment capable of adequate frequency tolerance becomes increasingly great. Achieving adequate tolerance in mobile units at these frequencies is much more difficult because of the effects of widely varying temperatures and other environmental factors. SSB may be combined with speech bandwidth reduction techniques to reduce its occupied bandwidth below typical speech bandwidth. Some experimentation has been done in this area involving the use of SSB and frequency companding to generate an SSB signal with roughly a 1.6 kHz bandwidth. Extensive work has also been undertaken involving the combination of SSB and amplitude companding (ACSB).[5] Under contract with the Commission, Dr. Bruce Lusignan of Stanford University has conducted laboratory and field tests of ACSB radios of his own design to determine the feasibility of ACSB for land mobile use. The results of that work are contained in six volumes submitted to the Commission.[6] From this preliminary information, it appears that ACSB may, in certain circumstances, be able to provide a communications capability comparable to FM while utilizing an assigned channel width of only 5 kHz. Among the performance features claimed in the reports are the following:

(1) Channel spacing requirement for speech of 5 kHz or possibly less.

(2) Intelligibility as good as that of conventional land mobile FM.

(3) Received signal-to-noise ratio and quiting 10 dB or more improved over conventional FM.

(4) Twice the coverage range of conventional FM for the same peak power for a typical user when noise-limited.

(5) Automatic search and lock on desired signal in 0.25 seconds, with a significant tendency to reject undesired signals on the same frequency.

(6) Improved response to deep rapid fading compared to conventional FM.

(7) Lower transmitter power consumption that conventional FM for equivalent peak power output.

(8) Squelch performance similar to conventional FM.

(9) An existing licensee converting from FM to ACSB on a narrowband channel could improve his service by reduction of interference received from FM stations and the FM stations would improve their service by his having moved and changed to ACSB.

(10) When ACSB channels are first made available, a new licensee would always receive better service in a narrowband channel than on an FM channel.

(11) The one (at 450 MHz) or two (at 150 MHz) channel(s) which fall midway between the current FM channel centers constitute essentially unused spectrum for narrowband operations.

7. In addition to SSB and ACSB, there are, of course, other radio transmission techniques that could be used for land mobile communications (voice and/or non-voice) which require less bandwidth than conventional FM.[7] We will not pursue a discussion of those techniques here, inasmuch as information on them can be found in available technical and professional publications. Additionally, we are aware that there are developmental efforts underway in this area and we hope that this Notice will serve to stimulate these efforts and demonstrate

[4] The bandwidth of a typical land mobile FM signal is 16–20 kHz.

[5] Amplitude companding is a process whereby the amplitude of loud speech syllables is reduced and the amplitude of quiet speech passages is increased, resulting in a more uniform speech waveform signal-to-noise ratio. At reception, amplitude expansion restores the amplitudes of the speech waveform to their original levels.

[6] These volumes are: (i) The Use of Ampitude compandored SSB in the Mobile Radio Bands; Final Report (PB80 215759); (ii) Spectral Efficiency of FM and ACSB Radios (PB80 215767); (iii) Analysis, Design, and Performance Evaluation of a Single Channel ACSB System (PB80 215775); (iv) Convenience Circuits (PB80 215783); (v) Rhyme Test Performance of ACSB, Narrowband, and FM Radios (PB80 215932); (vi) The Use of Amplitude Compandored SSB in the Mobile Radio Bands: A Progress Report (PB80 215791). These volumes are available from the National Technical Information Service, Springfield, Virginia, 22161, tele. 703–557–4690. The numbers in parenthesis above are the NTIS numbers to be used when ordering the volumes.

[7] E.g., double sideband (DSB, full or reduced carrier) and a wide range of digitable techniques.

the Commission's interest in them. The point we wish to make is simply that FM, while very useful for land mobile communications, is only one of a variety of emissions which could serve various licensees needs, and we therefore believe that any effort to investigate and formulate means of increasing the efficiency of land mobile spectrum usage must necessarily take this fact into account. By and large, the Commission's current land mobile technical standards and channel assignment plans are predicated on the use of FM, and, by heretofore restricting the freedom of access of land mobile users to alternative emissions, the Commission may have untentionally contributed to inefficiencies in spectrum usage.

The Inquiry

8. We believe it is now timely and appropriate for the Commission to investigate the desirability of amending its rules to provide for the introduction and use of alternative technologies for land mobile communications. We would again emphasize that the purpose of this proceeding is not the mandating of new technology; rather we believe it is far preferable to restructure our rules to permit the voluntary introduction of whatever technologies are appropriate for land mobile communications based on the needs of land mobile users. With only minor exception, there has really been no incentive in the past for use of narrowband communications equipment in the land mobile bands because the user could not benefit directly from the spectrum "saved." It is our purpose in this preceeding to investigate means of providing incentives for spectrum savings by introducing mechanisms to permit the user to derive direct benefit from reducing spectrum occupancy. What follows is a partial listing of the topics on which we solicit comment, and a brief discussion of each.

Technology

9. The widespread use of FM will undoubtedly continue for some time after introduction of new technology. However, the Commission's actions will have a significant impact in the rate of adoption of new technology and the degree of difficulty and disruption which occurs during the transition period as narrower channels are added. We are eager to see the introduction of more spectrum efficient technologies for the benefit of mobile radio users and the general public, but we are also anxious to have the transition be as smooth as possible. Introduction of new technologies into bands presently dedicated to 25 or 30 kHz FM channels will require care to provide for simultaneous operation of wideband and narrowband systems.

10. We believe that the marketplace should play a role in selecting what technologies are appropriate for particular uses, so long as those technologies are spectrally efficient. In the private mobile radio services, unlike services broadcasting to the public, we do not believe it is necessary for all transmitters to be compatible with all receivers. Therefore, it is conceivable that several narrowband techniques may ultimately exist simultaneously in the marketplace. It is clear in the case of land mobile that the choice of technology has largely been determined by a combination of technological state of the art and the amount of spectrum available for use. We feel that our part in the marketplace application of new technology in mobile radio services is to reaffirm by our actions that spectrum is becoming a more and more valuable part of the resource inputs to mobile radio services, and to assure users and the public that we will do our part in encouraging and permitting development and application of new technologies by the private sector. By means of this proceeding we hope to set in motion a process of developmental demonstrations and orderly introduction of new spectrum efficient technologies which will increase the number of available channels in the land mobile spectrum without unnecessarily disrputing the use of current channels. We ask respondents to provide information on the following issues and any other relevant to this process:

(i) What spectrum-saving technologies are suitable for voice/non-voice use? What bandwidths and technical standards are appropriate for these technologies?

(ii) Should the Commission continue to set specific technical standards for land mobile emissions? Based on what criteria?

(iii) What types of communications needs will these technologies meet and with what quality of service?

(iv) In what stage of development are these technologis and what time frame would be appropriate for their introduction?

(v) With respect to the Lusignan study of ACSB, we invite comment on the following topics and any others which may aid our analyses of this material:

(a) To what extent is the information set out in the Lusignan study useful in determining the feasibility of ACSB? What specific additions, deletions, or modifications should be made to this material?

(b) Are any further laboratory or field tests necessary to validate the conclusions specified? What resources and time frame would be required for these tests?

(c) Is ACSB suitable for land mobile use based on all of the information now available? In what frequency ranges could it be used successfully? What technical standards and emission limits should be set?

(d) How would ACSB compare to FM in terms of required frequency stability? Audio quality? Intelligibility? Occupied and necessary bandwidths? Fading characteristics? Mileage range (equal power levels) in the absence of interference? In the presence of interference? Suitability for hand-held units? Suitability for transmission of digital data?

(e) Is ACSB compatible with FM? What interference standard would be necessary for successful integration of the two modes?

(f) What would be the likely cost of ACSB equipment initially? In 5 years? Would industry be interested in building ACSB equipment? Under what conditions? Should the FCC act to stimulate the design, development, production and/or use of ACSB equipment? How?

Assignable Frequencies

11. The channel bandwidths in the 30–50 MHz, 150 MHz, and 450/470/800 MHz bands are, respectively, 20 kHz, 30 kHz, and 25 kHz. In the 30–50 MHz range, adjacent channels are also spaced 20 kHz apart, whereas at 150 MHz the adjacent channel spacing is 30 kHz for the DPLMRS and 30 or 15 kHz for the private services, depending on the mileage separation between adjacent stations. At 450 MHz, the adjacent channel spacing is 25 kHz, except in the Business Radio Service, where it is 12.5 kHz. With one exception, all of the channel widths and spacings are multiples of 5 kHz. One possible course of action, therefore, could be the designation of assignable frequencies with uniform 5 kHz spacing throughout the bands for use by narrowband emissions, with one or more 5 kHz channels being assigned to a licensee, depending on the bandwidth required by the emission. The total number of standard bandwidth channels currently available in the 150/450 bands for private use is 283 and 324, respectively, excluding tertiary channels at 150 MHz. The overlay of 5 kHz channels would create 1698 and 1620 additional channels respectively, in the private bands. A similar five-fold increase in channels, to approximately 320, would occur in DPLMRS bands. Of course, given current usage of the bands, only some fraction of these additional

channels could be put into use immediately. At 150 MHz, for instance, a prospective narrowband user would have to take into account the presence of all nearby primary and tertiary channel users, and select a narrowband channel which is compatible with those users. Any plan which would be implemented for overlaying additional channels would, necessarily, have to include interference standards and criteria for channel selection. It may also be possible to overlay systems of trunked narrowband stations, thus compounding the degree of efficiency obtained. We therefore ask respondents to consider the following points:

(i) Should the number of assignable frequencies be increased to accommodate narrowband emissions? If so, should a "bandplan" be adopted for each narrow-band emission authorized for the various bands? Or should the narrowband assignments be made on a case-by-case basis? What is the feasibility of trunked narrowband systems or other types of multi-channel assignment systems offering automatic or manual channel selection to users?

(ii) What degree of interference protection (co-channel and adjacent channel) would be appropriate? Would a mileage standard, as now used in the 150 MHz private radio services for tertiary channels, be desirable?

(iii) Should there be a priority system for assigning the narrowband channels (e.g., current licensees first)? What should be the role of frequency coordinators with respect to assignment of narrowband channels and "rechannelizing" of current channels?

Incentives

12. As noted earlier, there is currently very little incentive for users to switch to narowband technologies because they derive limited benefit from the spectrum "saved". The incentive which does exist, namely the ability to escape to some degree from currently congested frequencies, will no doubt increase as the number of users increases and the technology of narrowband emissions develops. It is quite understandable that no further incentives exist now because, with the current frequency assignment procedure and standardization of the FM emission, the only other way to save spectrum is to decrease the level of channel occupancy, through improved operating procedures or queueing techniques such as trunking. The benefits of such efficiencies, however, accrue to the land mobile community as a whole, with only a marginal benefit to the specific user(s) who make the improvements. A more desirable approach to this situation would involve linking spectrum efficiency with communications capability in such a way that the benefit to the specific user(s) implementing more efficient technology would at least equal the cost to those users of doing so. Such an incentive sytem could take several forms. For instance, the Commission could permit the licensee of an FM system to switch to a narrowband emission and yet retain authorization for all or part of the spectrum formerly occupied by wider bandwidth emission. The licensee could establish a second sytem in this spectrum or use it as additional "guardband" from nearby users, or, if not needed for those purposes, it could be disposed of on the basis of its value to someone else needing spectrum, (i.e., by sale, lease, or trade). We solicit information on the following topics as well as any additional information respondents may wish to add:

(i) Should the Commission institute some sort of incentive mechanism to reward users of spectrum-efficient technology? If not, are the current incentives sufficient to foster the growth of new technologies? If so, how?

(ii) What form of incentives should be used for existing systems? For new systems?

(iii) Should incentives be limited to certain emissions? Or certain frequency bands? Or certain geographical areas (e.g., congested areas)?

(iv) What would be the disadvantages of using incentives? Could such a mechanism be phased-in without unduly disrupting the current licensing system? If so, how?

Summary

13. It is evident from the foregoing that the scope of this inquiry is wide, and we certainly do ot expect all the issues raised herein to be resolved immediately. Rather, we intend this inquiry to be the first step in a process, possibly including further inquiry on these topics or others, which leads to a systematic integration of additional technologies and regulatory tools into the land mobile environment. Such an integration is a major undertaking which necessarily takes into account the current environment and the needs and capabilities of our licensees. In order to facilitate the introduction of technologies without undue delay when there is a sufficient interest in so doing, it is our intention to direct our primary attention initially to determining if there are any narrowband technologies on which development has indeed progressed to the point where provision should be made for them in our rules. If such a situation does exist, then it will be our intention to accommodate this usage without undue delay by whatever steps are necessary, including the issuance of developmental authorizations, rule waivers, rule amendments, etc. We urge respondents to address this matter fully in their comments, with specific emphasis on the technologies which can be brought into the marketplace in the near future. If, as strongly indicated in the results of the Lusignan study, ACSB is a promising near term technology, then we intend to move forward as quickly a possible to provide for its use.

14. If would indeed be beneficial for the Commission to receive as many evaluations of the Lusignan study as possible. Needless to say, much of this report is very technical and requires extensive analysis for a thorough understanding. Nevertheless, for the development of technical and interference standards should ACSB become operational, it will be necessary for us to incorporate thorough analyses of this material, and whatever additional material is developed on ACSB and other technologies, into the standard-setting process. It should be emphasized that the objective of these analyses should not be to determine whether ACSB, or any other narrowband emission, is superior to FM; rather, the analyses should focus on whether alternative narrowband emissions can, in various circumstances, provide a wholly *adequate* communications capability while using *less bandwidth* than FM. In other words, for the sake of example, let it be agreed that narrowband emission "X" is inferior to FM in, say, speech quality. This being the case, we can nevertheless see no good reason for prohibiting the use of "X" when there are users to whom speech quality is unimportant but to whom the benefits of narrow bandwidth are important. We believe it should be one of our goals to incorporate the maximum amount of flexibility into the land mobile rules so that licenses can be free to choose those spectrally efficient emissions which best fit their needs. While it is clear that the introduction of this flexibility will be a very complicated process, it is equally clear that the long term viability of land mobile services depends on our moving in this direction without further delay.

15. This Notice is issued pursuant to Sections 4(i), 303, and 403 of the Communications Act of 1934, as amended. All interested parties may file comments on or before March 9, 1981, and reply comments on or before May 11, 1981. All comments and replies should be sent to: Secretary, Federal

Communications Commission, Washington, D.C. 20554. For further information, please contact Joseph Johnson at 202–632–6930.

Federal Communications Commission.

William Tricarico,

Secretary.

[FR Doc. 80–29546 Filed 9–23–80; 8:45 am]

BILLING CODE 6712-01-M

DEPARTMENT OF COMMERCE

National Oceanic and Atmospheric Administration

50 CFR Parts 222, 225, 226, and 227

Scoping Meeting on Regulations To Reduce Sea Turtle Mortality in Southeastern U.S. Waters

AGENCY: National Marine Fisheries Service, National Oceanic and Atmospheric Administration, U.S. Department of Commerce.

ACTION: Announcement of public scoping meeting.

SUMMARY: The National Marine Fisheries Service intends to prepare a draft supplement to the Final Environmental Impact Statement (FEIS) issued on July 28, 1978, which listed and protected the green sea turtle, loggerhead sea turtle, and olive (Pacific) ridley sea turtle under the Endangered Species Act of 1973. A public meeting will be held to scope and plan the range of issues, alternatives, and impacts to be considered by the proposed action.

DATES: A scoping meeting will be held at 7:00 p.m., October 16, 1980, at the Holiday Inn, I–95 and U.S. 17, Richmond Hill, Georgia 31324. An additional scoping meeting is planned on October 2, 1980, at the Admiral Benbow Inn (Airport), Atlanta, Georgia.

ADDRESS: Regional Director, National Marine Fisheries Service, 9450 Koger Boulevard, St. Petersburg, Florida 33702.

FOR FURTHER INFORMATION CONTACT: Charles A. Oravetz, Fishery Administrator, National Marine Fisheries Service, Southeast Region, 9450 Koger Boulevard, St. Petersburg, Florida (813) 893–3366.

SUPPLEMENTARY INFORMATION: The scoping meeting will be held as part of proposed rulemaking to require excluder panels on shrimp trawls in specific areas during certain periods of time to reduce the incidental catch and mortality of sea turtles. These areas are generally defined as the coasts of South Carolina, Georgia and the middle and upper east coast of Florida and coast of Padre Island, Texas. The times are generally May–August each year. These areas and times will be further defined and other areas may be identified during the rulemaking process.

Alternatives to the proposed action are: (1) require excluder panels on all shrimp trawls in all areas, at all times; (2) issue permits to allow for the resuscitation of incidentally caught sea turtles; and (3) limit the time of shrimp trawling in areas of turtle abundance.

Dated: September 17, 1980.

Robert K. Crowell,

Acting Executive Director, National Marine Fisheries Service.

[FR Doc. 80–29478 Filed 9–23–80; 8:45 am]

BILLING CODE 3510-22-M

Notices

Federal Register
Vol. 45, No. 187
Wednesday, September 24, 1980

This section of the FEDERAL REGISTER contains documents other than rules or proposed rules that are applicable to the public. Notices of hearings and investigations, committee meetings, agency decisions and rulings, delegations of authority, filing of petitions and applications and agency statements of organization and functions are examples of documents appearing in this section.

COMMISSION ON CIVIL RIGHTS

District of Columbia Advisory Committee; Agenda and Notice of Open Meeting

Notice is hereby given, pursuant to the provisions of the Rules and Regulations of the U.S. Commission on Civil Rights, that a meeting of the District of Columbia Advisory Committee to the Commission will convene at 2:00 p.m. and will end at 4:00 p.m., on October 9, 1980, at The National Trust for Historic Preservation, 1785 Massachusetts Avenue, N.W., Washington, D.C. 20036. The purpose of the meeting is a discussion and review of the draft report of the Forum on Police/Community Relations.

Persons desiring additional information or planning a presentation to the Committee, should contact the Chairperson, Rev. Ernest R. Gibson, 1239 Vermont Avenue, N.W., Washington, D.C. 20005, (202) 638-1077 or the Regional Office, 2120 L Street, N.W., Suite 510, Washington, D.C., 20037, (202) 254-6717.

The meeting will be conducted pursuant to the provisions of the Rules and Regulations of the Commission.

Dated at Washington, D.C., Septembr 19, 1980.

Thomas L. Neumann,
Advisory Committee Management Officer.

[FR Doc. 80-29585 Filed 9-23-80; 8:45 am]
BILLING CODE 6335-01-M

Michigan Advisory Committee; Agenda and Notice of Open Meeting

Notice is hereby given, pursuant to the provisions of the Rules and Regulations of the U.S. Commission on Civil Rights, that a meeting of the Michigan Advisory Committee to the Commission will convene at 10:00 a.m. and will end at 1:00 p.m., on October 7, 1980, at the MEA—Executive Committee Meeting Room, 1216 Kendall, East Lansing, Michigan. The purpose of the meeting is to discuss proposed project on state rule on desegregation of schools.

Persons desiring additional information or planning a presentation to the Committee, should contact the Chairperson, Ms. Jo Ann W. Terry, 18922 Fairfield, Detroit, Michigan 48221, (313) 496-2628 or the Midwestern Regional Office, 230 South Dearborn Street, 32nd Floor, Chicago, Illinois 60604, (312) 353-7479.

The Meeting will be conducted pursuant to the provisions of the Rules and Regulations of the Commission.

Dated at Washington, D.C., September 17, 1980.

Thomas L. Neumann,
Advisory Committee Management Officer.

[FR Doc. 80-29587 Filed 9-23-80; 8:45 am]
BILLING CODE 6335-01-M

DEPARTMENT OF COMMERCE

Economic Development Administration

Final EDA Directive Implementing the National Environmental Policy Act

AGENCY: Economic Development Administration (EDA), U.S. Department of Commerce.

ACTION: Final EDA procedures to implement the National Environmental Policy Act.

SUMMARY: These procedures constitute the revised EDA Directive 17.02-2 implementing the National Environmental Policy Act (NEPA). These procedures have been developed in compliance with the regulations of the Council on Environmental Quality (CEQ), (40 CFR 1507.3), and with Department of Commerce Administrative Order 216-6. A draft of the procedures was published for public review and comment on June 17, 1980 (45 FR 41028).

SUPPLEMENTARY INFORMATION: Numerous comments were received from Federal agencies and one State Office. Typographical errors were corrected and minor clarifications made. The Environmental Checklist was modified and clarified. One commentor suggested that if two or more indicators of significance (Chapter 3, Section 5) were exceeded, an EIS should be required. We believe that this is too inflexible and have elected not to adopt the suggestion. Two indicators of significance have been added which deal with locations adjacent to toxic, hazardous or radioactive waste disposal sites and the displacement of numerous individuals. The sample finding of no significant impact (FONSI) (Chapter IV, Section II) has been modified to require a statement of the reasons why the action is not a major Federal action significantly affecting the quality of the human environment. Other findings, as required by the several other environmental mandates listed in Chapter I, will also be included in the FONSI. The public availability of findings of no significant impact has been made consistent with the CEQ Regulations.

Several comments sought specific guidance for internal processing of environmental documents. These matters are more appropriately discussed in internal guidance documents in existence and under preparation. Several commentors suggested that the procedures more specifically address secondary or cumulative impacts. This was done at Chapter II, Section I. Several commentors requested specific guidance for compliance with other environmental mandates. Procedures for compliance with the Clean Air Act and Federal Water Pollution Control Act are found in EDA Directive No. 17.02-7. Chapter V has been restructured. However, the content has not significantly changed. Other compliance procedures are included in the existing Directive and internal Agency guidance documents.

As published in draft, the procedures were designed to fulfill EDA's responsibility to prepare implementing procedures under the CEQ Regulations and the Advisory Council on Historic Preservation's (ACHP) Regulations. The Council on Environmental Quality has approved the procedures. The ACHP is considering a conditional approval of these procedures until all of the agencies involved in the Rural Initiative prepare their implementing procedures. EDA has decided to publish these procedures now to meet the requirements of the CEQ Regulations. Upon receipt of the ACHP approval, Chapter VII will be published to meet the separate requirements of the ACHP Regulations. Until this approval is obtained, EDA will

continue to utilize, as interim procedures, the material presented in Chapter VII of the procedures published for public review and comment on June 17, 1980.

EFFECTIVE DATE: September 24, 1980.

FURTHER INFORMATION: For further information contact Mr. Andrew E. Kauders, Special Assistant for the Environment, Economic Development Administration, Room 7217, U.S. Department of Commerce, 14th and Constitution Avenue, N.W., Washington, D.C. 20230, telephone: 202/377-4208.

Dated: September 12, 1980.

Robert Hall,

Assistant Secretary for Economic Development.

Table of Contents

EDA Directive for the Implementation of the National Environmental Policy Act of 1969 and Other Federal Environmental Mandates, as Required

Chapter I. General

1. The National Environmental Policy Act of 1969 (NEPA).
2. The Council on Environmental Quality (CEQ) Regulations.
3. Department of Commerce Administrative Order.
4. EDA Policy on Implementation of the NEPA Process.
5. Use of NEPA Documents by Decisionmakers.
6. Applicability.
7. Responsibilities.
7.1 Assistant Secretary for Economic Development.
7.2 Deputy Assistant Secretary for Economic Development.
7.3 Special Assistant for Environment.
7.4 All Other Deputy Assistant Secretaries In EDA.
7.5 Chief Counsel.
7.6 Regional Director.
7.7 Deputy Regional Director.
7.8 Regional Environmental Officer.
7.9 Assistant Regional Directors or Division Chiefs.
7.10 Regional Counsel.
7.11 Economic Development Representative.
7.12 Applicant.
7.13 EIS Coordinator
8. Environmental File.

Chapter II. Classes of EDA Actions

1. Introduction.
2. Class I, Actions That Normally Do Not Require Either an Environmental Impact Statement (EIS) or an Environmental Assessment (EA).
3. Class II, Actions That Normally Require EAs.
4. Class III, Action That Normally Require an EIS.
5. Indicators of Significance.

Chapter III. Environmental Analyses

1. Information gathering and environmental analysis.
2. Documentation of environmental analysis.
a. Environmental Checklist.
b. Environmental Assessment.
c. Environmental Impact Statement.
3. Timing.
4. Reassessment.

Chapter IV. The Finding of No Significant Impact (FONSI)

1. Definition.
2. Distribution.

Chapter V. Planning and Processing Environmental Impact Statements (EIS)

1. Types of EIS.
2. Stages of EIS Development.
2.1 Preliminary Draft EIS.
2.2 Draft EIS.
2.3 Preliminary Final EIS.
2.4 Final EIS.
2.5 Supplemental EIS
2.6 Additional information.
3. Timing and Planning of the EIS.
3.1 Sequence of timing.
3.2 Timing.
3.3 Early Planning.
3.4 Notice of Intent.
3.5 Initiating the Scoping Process.
3.6 How to Hold a Scoping Meeting.
3.7 Completing the Scoping Process.
4. Content of EISs.
4.1 Preliminary Draft EIS and Preliminary Final EIS.
4.2 The Final EIS.
4.3 Preparation of Supplemental Draft or Final EIS.
5. Processing an EIS.
5.1 Regional Environmental Officer Review of Preliminary Draft EIS.
5.2 Program Area Review of Preliminary Draft EIS.
5.3 Special Assistant Review of Preliminary Draft EIS.
5.4 Draft EIS.
5.5 Preliminary Final EIS and Final EIS.
5.6 Limits on Administrative Actions.
5.7 Record of Decision.

Chapter VI. Public Information and Involvement

1. Requirement.
2. Input to the Environmental Assessment (EA).
3. Review of the Finding of No Significant Impact (FONSI).
4. Notice of Intent.
5. List of Interested Groups.
6. Distribution and Review of the Draft Environmental Impact Statement (EIS).
7. Commenting Period.
8. EIS Availability.
9. Distribution and Power.
10. Record of Decision.
11. Public Hearings.
12. Public Contact.
13. Other Public Notice.
14. Effect on Other Directives.

List of Figures

1. Environmental Checklist.
2. NEPA in EDA Planning Process.
3. Sample Finding of No Significant Impact.
4. Sequence of Actions Related to EIS Preparation.

Chapter I. General

1. The National Environmental Policy Act of 1969 (NEPA)

Section 102 of NEPA directs all Federal agencies to the fullest extent possible: (1) to use a systematic, interdisciplinary approach which will ensure the integrated use of the natural and social sciences and the environmental design arts in planning and decision-making which may have an impact on man's environment; (2) to identify and develop methods and procedures which will ensure that presently unquantified environmental amenities and values may be given appropriate consideration in decision-making along with economic and technical considerations; and (3) to include in every recommendation or report on proposals for legislation and other major Federal actions significantly affecting the quality of the human environment, a detailed statement by the responsible official which includes:

a. The environmental impact of the proposed action;

b. Any adverse environmental effects which cannot be avoided should the proposal be implemented;

c. Alternatives to the proposed action;

d. The relationship between local short-term uses of man's environment and the maintenance and enhancement of long-term productivity; and

e. Any irreversible and irretrievable commitments of resources which would be involved in the proposed action should it be implemented.

Other environmental mandates to be considered include, but are not limited to:

(1) Environmental Quality Improvement Act;

(2) National Historic Preservation Act of 1966, as amended;

(3) Archeological and Historic Preservation Act;

(4) Clean Air Act, as amended;

(5) Federal Water Pollution Control Act, as amended;

(6) Endangered Species Act, as amended;

(7) Wild and Scenic Rivers Act;

(8) Resource Conservation and Recovery Act;

(9) Safe Drinking Water Act;

(10) Coastal Zone Management Act;

(11) Executive Order 11514, Protection and Enhancement of Environmental Quality, as amended;

(12) Executive Order 11593, Protection and Enhancement of the Cultural Environment;

(13) Fish and Wildlife Coordination Act;

(14) Floodplain Management Program;

(15) Protection of Wetlands Program.

2. The Council on Environmental Quality (CEQ) Regulations

CEQ issued Regulations on November 29, 1978 (43 FR 55978) under the authority of NEPA and Executive Order 11514 as amended by Executive Order 11991. The CEQ Regulations, which apply to all Federal agencies, further describe how Federal agencies shall comply with NEPA.

3. Department of Commerce Administrative Order

Department of Commerce Administrative Order 216–6 mandates how the Department of Commerce shall comply with NEPA and the CEQ Regulations.

4. EDA Policy on Implementation of the NEPA Process

It is the policy of EDA to assure, through the procedures set forth in this Directive, that proper environmental review of program activities takes place, that there is a proper balance between the goals of economic development and environmental enhancement, and that adverse environmental impacts are mitigated or avoided to the extent possible.

This directive shall be implemented in conjunction with EDA's Directive 17.04, the EDA Program to Implement Executive Orders 11988 and 11990, "Floodplain Management" and "Protection of Wetlands."

5. Use of NEPA Documents by Decisionmakers

a. Environmental documents, (environmental assessments, environmental checklists, notices of intent, findings of no significant impact and environmental impact statements) and the comments and responses that have been made on the documents shall accompany the proposed action through agency review.

b. Responsible officials (see paragraph 7) shall use the environmental documents when deciding whether to offer assistance and when weighing the proposed action against alternatives to the proposed action. Those alternatives considered by the responsible officials shall be discussed in the environmental documents.

c. The responsible official shall consider all alternatives covered in the environmental documents when making a decision.

d. All alternatives available to the decisionmaker shall be included in the environmental documents.

6. Applicability

This directive is applicable to all EDA actions at both Headquarters and Regional Offices, and implements NEPA including the CEQ Regulations, and DAO 216–6.

7. Responsibilities

7.1 Assistant Secretary for Economic Development

a. For EDA ensures the proper balance between economic development and environmental enhancement;

b. Ensures that EDA policies and programs reflect appropriate consideration of environmental values;

7.2 Deputy Assistant Secretary for Economic Development

a. Serves as mediator and decisionmaker on conflicts between program missions and the attainment of environmental goals;

b. Provides policy direction to the EDA environmental program;

7.3 Special Assistant for Environment

a. Acts as principal advisor on environmental affairs to the Assistant Secretary;

b. Serves as the responsible Agency official under the CEQ Regulations (Section 1507.2(a));

c. Serves as the responsible Agency official under the Advisory Council on Historic Preservation's "Regulations for the Protection of Historic and Cultural Properties," hereafter referred to as the "Advisory Council's Regulations";

d. Advises the Assistant Secretary for Economic Development on the adequacy of EAs, EISs and all other environmental documents;

e. Develops and recommends to the DAS/ED agency procedures for complying with other environmental legislation, Executive Orders, and regulations;

f. Reviews EDA's activities and program involvements, and recommends approval, disapproval or modification by the Assistant Secretary based upon the balancing of anticipated beneficial or adverse environmental impacts against the anticipated economic benefits of the project, and upon the fulfillment of the requirements of this Directive;

g. Develops controls for avoiding or mitigating adverse environmental impacts and monitors and ensures their implementation;

h. Coordinates EDA's environmental program with the environmental programs of local, State and other Federal agencies that become involved with EDA activities;

i. Represents the Assistant Secretary at conferences, meetings, and public hearings, and on interagency committees dealing with environmental matters;

j. Maintains liaison on environmental matters with interested public groups and local, State and other Federal agencies;

k. Reviews and evaluates legislative and administrative proposals for environmental concerns;

l. Assists in resolving questions of lead agency determinations;

m. Provides guidance in addressing environmental issues which surface after project approval;

n. Provides policy guidance and training for the Regional Office staff;

o. Monitors and audits EDA's performance in carrying out its responsibilities under this Directive;

p. Performs such other assignments of a policy, administrative or operational nature as requested by the Deputy Assistant Secretary for Economic Development;

q. Acts as Environmental Coordinator for programmatic and legislative issues and EIS's prepared at the headquarters office;

r. Coordinates EDA review of EISs prepared by other agencies in accordance with DAO 216–6.

s. Executes findings of no significant impact (FONSI) for headquarters projects;

t. Files draft, final and supplemental EIS prepared by the headquarters office with EPA and other public and private parties in accordance with CEQ regulations and DAO 216–6;

u. Serves as the responsible official for EDA activities which adversely affect National Register-eligible properties and signs Memoranda of Agreement in accordance with the Advisory Council's Regulations.

7.4 All Other Deputy Assistant Secretaries in EDA

a. Ensure that programs under their direction reflect the proper balance between economic development and environmental enhancement as determined by the Assistant Secretary;

b. Ensure that their programs reflect positive and appropriate considerations of environmental values.

7.5 Chief Counsel

a. Determines legal adequacy of environmental documentation and compliance;

b. Assists the Special Assistant for Environment in the development of special conditions for the mitigation of adverse environmental impacts.

7.6 Regional Director

a. Executes findings of no significant impact (FONSI) after consideration of an environmental assessment and the recommendation of EDA's Regional Environmental Officer (REO);

b. Files draft, final and supplemental EISs with EPA and circulates them to appropriate public and private parties.

c. Refers conflicts with the REO to the Deputy Assistant Secretary for Economic Development, through the Special Assistant for the Environment, for resolution.

d. Reports to the Deputy Assistant Secretary for Economic development instances where someone other than the Regional Environmental Officer (REO), or someone on the REO's staff, exercises duties of the REO. The reports shall specifically state the circumstances requiring such substitutions.

7.7 Deputy Regional Director

a. Assistant in the development of a regional strategy that is consistent with EDA's environmental program;

b. Assists Regional Environmental Officer in prioritizing workloads.

7.8 Regional Environmental Officer

a. Acts as principal advisor on environmental matters to the Regional Director;

b. For all Regional Office actions, is responsible for the preparation of all necessary environmental documentation;

c. Acts as EIS Coordinator for all EISs prepared by the Regional Office;

d. Reviews on a project-by-project basis the Regional Office's program activities, and recommends project approval, disapproval or modification by the Regional Director based upon the balancing of anticipated beneficial or adverse environmental impacts against the anticipated economic benefits of the project, and upon the fulfillment of this Directive's requirements;

e. Represents the Regional Director at conferences and meetings dealing with environmental matters of a Regional Office nature;

f. Maintains liaison on Regional Office environmental matters with interested public groups and local, state, and other Federal agencies;

g. Reviews and evaluates proposals in terms of their environmental impact at the request of the Regional Director;

h. Develops and recommends controls for avoiding or mitigating adverse environmental impacts and monitors their implementation;

i. Provides assistance in resolving post-approval environmental matters at the Regional Office level;

j. Maintains records management system for those actions required by this Directive;

k. Provides guidance and training to Regional Office staff, including Economic Development Representatives, on the requirements of this Directive;

1. Performs other assignments of an administrative or operational nature that may be requested by the Regional Director or the Special Assistant;

m. Coordinates with the State Historic Preservation Officer (SHPO) all actions that may have a potential effect on cultural resources;

n. For actions affecting cultural resources, formulates mitigation measures in consultation with the SHPO and submits a request to the Advisory Council for its review and comment;

o. Consults with the Special Assistant concerning mitigation measures if there is disagreement with the SHPO, the ACHP, the applicant, or another affected Federal agency;

p. For projects adversely affecting cultural resources, submits information to the Special Assistant for further coordination with the Advisory Council on Historic Preservation

q. Submits requests to the Keeper of the National Register of Historic Places for determinations of eligibility; and

r. Reviews environmental documentation from other agencies and transmits comments to the Special Assistant.

7.9 Assistant Regional Directors or Division Chiefs

a. Assures timely submission of initial and followup information to Regional Environmental Officer;

b. Notifies Regional Environmental Officer of preapplication conferences;

c. Identifies and considers alternatives to proposed actions;

d. Assures timely compliance with NEPA requirements in project processing;

e. Assures that mitigation measures are implemented; and,

f. Informs Regional Environmental Officer of any substantive changes in the proposed action or significant new information that becomes available concerning potential environmental impacts.

7.10 Regional Counsel

a. Determines legal adequacy of environmental documentation and compliance;

b. Assists the Regional Environmental Officer in the development of special conditions for the mitigation of adverse enviromental impacts.

7.11 Economic Development Representative

a. Informs applicants of EDA environmental requirements;

b. Assists applicants in properly responding to environmental questions in the application before it is submitted to EDA;

c. Assists Regional Environmental Officer by providing requested information;

d. Assures that the environmental portion of the application has been completed; and

e. Notes if a site visit has been made and if any environmental issues or controversies exist.

7.12 Applicant

a. Provides environmental information requested in the application and needed for Agency review, at the earliest possible time;

b. Applicants for federal assistance from EDA and other Federal agencies shall pay particular attention to the need to assess the commulative impacts of the total proposal (40 CFR 1508.7).

c. For Public Works projects, meets A–95 requirements and submits comments to Regional Office;

d. Initiates compliance with Section 106 of the National Historic Preservation Act of 1966, by submitting appropriate information to the SHPO.

7.13 EIS Coordinator

For EIS's prepared by EDA as either the lead or the joint-lead NEPA agency, or in cooperation with another agency (cooperating agency), the Regional Environmental Officer or the SA/E (or an immediate staff person) shall assume the role of the EIS coordinator. The responsibilities of the EIS Coordinator are to:

a. Act as EDA point of contact for all actions relating to the EIS;

b. Arrange for the preparation and publication of all notices;

c. Develop the Scope of Work for the EIS;

d. Arrange with the funding program (technical assistance, public works for step one grants, etc.) officer for the preparation and distribution of requests for proposals for EISs to be prepared under contract;

e. Review the contractors' proposals and make the selection of a contractor;

f. Supervise the contractor on the day-to-day development of the EIS;

g. Review and comment on the contractor's EIS work;

h. Coordinate with any interested or affected parties;

i. Chair public meetings and hearings;

j. Assure that EIS requirements of NEPA, the CEQ Regulations, DAO 216-6 and this Directive are met.

For EISs in which EDA is a cooperating agency, the EIS coordinator responsibilities may include all of the above responsibilities, but shall as a minimum include items a, c, e, g, and j above. In addition, the EIS Coordinator shall attend all meetings and hearings relating to the EIS.

8. Environmental File

EDA shall initiate an environmental file for each project which shall contain the following, as appropriate:

a. The Economic Development Representative's signed assurance as required in paragraph 7.11d;

b. Comments per OMB Circular A-95 from the appropriate State and areawide clearinghouses, including all supplemental comments made by reviewing agencies;

c. Comments, permits and documents of an environmental nature from Federal agencies, non-Federal or private organizations, or interested individuals;

d. The completed environmental documentation and impact determination;

e. Completed Form ED-524, "Certification of Compliance with the Clean Air Act and the Federal Water Pollution Control Act," as necessary;

f. The Regional Environmental Officer's or Special Assistant's clearance on the project;

g. Where required, draft, final or supplemental environmental impact statement, and the record of decision;

h. For projects requiring an environmental impact statement and the Assistant Secretary's approval, the Special Assistant's review and certification that the requirements of this Directive have been met and a recommendation for approval or disapproval to the Assistant Secretary based on a balancing between the goals of economic development and environmental enhancement;

i. Copies of minutes, recordings or transcripts of any public meetings or hearings;

j. Copies of any environmental notices;

k. Findings required under EDA Directive 17.04 for actions affecting floodplains or wetlands.

l. Other findings as may be required by those mandates listed in Chapter 1, Section 1.

Chapter II. Classes of EDA Actions

1. Introduction

All EDA actions shall receive appropriate environmental review. The extent of the environmental review will depend upon the conditions present in each case. All reviews shall consider, in addition to the primary impact resulting from a proposed action, secondary and cumulative impacts. The classes of EDA actions (paragraphs 2 through 4) and indicators of significance (paragraph 5) are listed below. The indicators shall be used as a part of the review process to help determine the level of review that is necessary. Except for those actions that are categorically excluded from the requirement to prepare an EIS or EA (paragraph 2) the range of appropriate review runs from completion of an Environmental Checklist to preparation of a final EIS and record of decision.

2. Class I, Actions That Normally Do Not Require Either an Environmental Impact Statement (EIS) or an Environmental Assessment (EA).

The actions in subparagraphs *a* through *k* below are categorically excluded from the requirement to prepare an EIS or an EA under normal circumstances. However, during the application review process for all actions except those found in subparagraphs g, h, i, and j, the Regional Environmental Officer shall document the file to reflect the fact that the action qualifies for the exclusion and shall be alert to unusual conditions that would require an EIS or an EA. A project categorically excluded from compliance with NEPA under this section may still require full compliance with EDA Directive 17.04. The following economic assistance actions are categorically excluded because Agency experience has shown that they do not significantly affect the quality of the human environment:

a. Loans or loan guarantees for working capital (the purpose of which is to provide for the continuation of existing operations);

b. Interest subsidy for existing loans and/or actions covered in this exclusion;

c. Acquisition of machinery and equipment (M&E) unless these require applications for or amendments to existing air, water or solid waste permits;

d. Additional funds to cover cost overruns for previously EDA-funded and environmentally-assessed activity;

e. Weatherization of non-historic properties;

f. Repairs to plant and equipment, or replacement-in-kind of utilities and infrastructure;

g. Environmental monitoring;

h. Research, planning grants and technical assistance projects that are not reasonably expected to commit the Federal government to a course of action, or to result in legislative proposals, or to result in direct development;

i. EDA administrative actions in support of maintaining normal day-to-day operations such as personnel actions, travel, procurement of supplies, etc.;

j. Procurement contracts for EISs, EAs, office space, supplies, etc.;

k. Loans and loan guarantees to restructure debt.

3. Class II, Actions That Normally Require EAs

An EA shall normally be prepared for these actions to determine if an EIS is necessary:

a. Any action located in or potentially affecting the values and functions of a floodplain or wetland;

b. Any action affecting cultural resources either listed on or eligible for the National Register of historic Places, unless excluded by this Directive or a programmatic Memorandum of Agreement with the Advisory Council on Historic Preservation;

c. New infrastructure such as roads, water lines, or sewer lines;

d. Actions that may affect prime farmlands;

e. Actions that result in changes in land use;

f. Activities related to development of tourism or recreational facilities;

g. Any action of which the primary purpose involves the development, manufacture, transportation, storage, disposal, procurement, reprocessing, recycling or use of toxic or hazardous materials;

h. Feasibility studies for the development of energy facilities or depletable natural resources;

i. All other Agency program actions not otherwise excluded or normally requiring an EIS.

4. Class III, Actions That Normally Require an EIS

The actions in *a* through *c*, below, normally require the preparation of an EIS because they either meet the indicators of significance, they are required by other Agency Directives, or experience has shown that significant impacts are normally associated with such actions.

a. Construction of a critical action within the boundaries of a critical action floodplain, as defined by the Water Resources Council;

b. Construction of non-functionally dependent activities located in wetlands (a functionally-dependent use is one which can not perform its intended

purpose unless it is located or carried out in close proximity to water).

c. Regional or multi-county water or sewer systems.

5. Indicators of Significance

Classes I and III were established in part on the indicators of significance. The determination of whether Class II actions require an EIS or a lesser form of environmental review shall be made based on the following indicators. This Directive does not arbitrarily establish the number of indicators of significance that must be exceeded before an EIS is required on an action, because each proposed action must be evaluated on a case-by-case basis. However, normally if two or more of the thresholds are exceeded, an EIS is required. It is possible that exceeding a single indicator may trigger the necessity for an EIS.

a. Traffic generated by the action would represent a 10-percent increase in average daily traffic volume on the access roads to the site or the major arteries in the affected area, and peak-hour congestion occurs daily on the access road to the site or on the major arteries in the affected area.

b. The action may lead to a violation of Federal, state or local law or requirements imposed for the protection of the environment; for example, if air quality standards have been violated within the past year and the project is expected to increase emissions, or contruction traffic or project noise will definitely be in violation of noise standards and one or more types of sensitive receptors would definitely be at risk.

c. The proposed project, its contractors, or final solid waste disposal site(s) will not be in compliance with the EPA's "Solid Waste Management Guidelines" for thermal processing and land disposal, storage and collection, source separation, and resource recovery facilities; or with any other Federal, state, or local regulations, standards, or health codes or the final disposal site(s) will not have adequate capacity for the solid waste from the proposed project.

d. Public utilities have insufficient capacity to provide reliable service to the project and to ensure delivery of required flow for average and peak periods.

e. The action is located on or near an active geological fault or unique geological features.

f. Wastewater generated by the applicant's facility will represent more than 3 percent of the unused capacity (considering pending applications) of the available treatment facilities and the level of treatment does not meet the Federal Water Pollution Control Act compliance schedule.

g. The proposed project will not be compatible with the present land use character of the specific site or affected area.

h. The proposed action may adversely affect an endangered or threatened species or its habitat.

i. The proposed action may adversely affect or be located on parklands, prime farmlands, floodplains, wetlands, wild and scenic rivers, or other ecologically critical areas.

j. The proposed action will result in the handling of a significant amount (defined as an amount that if spillage occurs it will result in a health hazard or damage to the ecosystem, or if accidentally dumped into the sewage system will damage treatment facilities or contaminate rivers or streams) of toxic, hazardous, or radioactive materials.

k. Archeological or cultural resources on or potentially eligible for listing on the National Register will be adversely affected by the proposed action.

1. Local community service agencies indicate that one or more community services will be inadequate to serve the project.

m. The proposed project will permanently alter or severely affect an area that has been formally recommended for protection by Federal, state, regional, or local government agencies as part of a land use or development plan.

n. The proposed project lies on or adjacent to groundwater recharge areas or significant groundwater aquifers, wells or well fields, or watersheds of significant surface water supplies;

o. The proposed project has generated an environmental controversy on a local, state, or national level, whether due to factors mentioned in *a* through *n* above, or for other reasons of an environmental nature;

p. The proposed project will be located on or abuts an active or abandoned toxic, hazardous or radioactive waste disposal site;

q. The proposed action will result in the displacement or relocation of numerous businesses, residences, or farm operations.

Chaper III. Environmental Analyses

1. Information Gathering and Environmental Analysis

The type and amount of information gathered and the level of environmental analysis to be conducted will vary depending upon the type and scope of the proposed action, its alternatives, and the environmental setting. The methodologies used for this process vary from the general, nonquantitative to specific and quantitative. The responsible official must be sensitive to the advantages and shortcomings of each methodology as well as the level of analysis required for each proposed action. For these reasons, no one methodology is required.

2. Documentation of Environmental Analysis

The type and amount of documentation necessary for environmental analysis will vary with each individual action. Chapter II identifies EDA actions that require environmental analysis and classifies them according to the level of analysis required. EDA environmental analysis is normally documented in one of the following formats:

a. Environmental Checklist.

(1) The environmental checklist, figure 1, may be used in the initial stages of the NEPA process. It is useful in directing and organizing areas of study. The checklist may be used to determine whether the action is categorically excluded (Chapter 2, paragraph 2). For actions requiring an EA, the checklist will help to identify the scope of the EA by organizing the available information and highlighting the areas of impact that are of primary concern.

(2) If a checklist is used, it shall be completed in consultation with appropriate Agency specialists and the applicant as necessary. Background information, when available, shall be attached to the checklist or referenced in an attachment to the checklist to support the findings.

BILLING CODE 3510-24-M

FIGURE I

FORM ED-538
(8-80)

U.S. DEPARTMENT OF COMMERCE
ECONOMIC DEVELOPMENT ADMINISTRATION

ENVIRONMENTAL CHECKLIST

Project name:	Brief project description:
Location:	
Project number:	

Environmental Resources	Potential for Significant Impact (Mark one)		Mitigation Measures Attached (Mark one)	
	NO 1/	YES 2/	NO	YES
(1) Geological faults or other unique features	☐	☐	☐	☐
(2) Soils stability, steep slopes	☐	☐	☐	☐
(3) Floodplains, wetlands	☐	☐	☐	☐
(4) Vegetation and wildlife	☐	☐	☐	☐
(5) Endangered species	☐	☐	☐	☐
(6) Existing land use and zoning (residential, commercial, industrial, etc.)	☐	☐	☐	☐
(7) Prime/unique farmland	☐	☐	☐	☐
(8) Historic (sites, buildings, archaeological & architectural)	☐	☐	☐	☐
(9) Energy availability (electrical, fuels, etc.)	☐	☐	☐	☐
(10) Solid waste disposal (quantity, hazardous materials)	☐	☐	☐	☐
(11) Water (potable, operations, etc.)	☐	☐	☐	☐
(12) Water resources (rivers, aquifers)	☐	☐	☐	☐
(13) Sewer system (storm and sanitary, hazardous substances)	☐	☐	☐	☐
(14) Wild and scenic rivers	☐	☐	☐	☐
(15) Streets, traffic, parking	☐	☐	☐	☐
(16) Ambient air qualify (dust, odor, hazardous substances, etc.)	☐	☐	☐	☐
(17) Ambient noise (operations, construction)	☐	☐	☐	☐
(18) Is the project inconsistent with approved Coastal Zone Management Plan	☐	☐	☐	☐
(19) Other *(Identify)*	☐	☐	☐	☐

1/ Requires no further environmental documentation.
2/ Requires further environmental documentation.

PREPARED BY

REO:		Date:
Other:	Title:	Date:

USCOMM-DC 80-53533-P80

BILLING CODE 3510-24-C

b. The Environment Assessment (EA).

(1) The EA is an important document in the decisionmaking process because it is used with other technical and economic studies as a basis for decisions by the responsible agency officials. It is a public document and it may be entered as evidence to support decisions in hearings and court actions. Therefore, the EA shall disclose all pertinent information. It shall discuss the need for a proposal and the environmental impacts that may result from the proposal and any alternatives being considered. An EA is prepared for all Class II actions and may be prepared for Class I or Class III actions (Chapter 2.2). EA's vary in scope, length and content in accordance to the severity of potential environmental impacts.

(2) The EA is intended to be a brief analysis that provides sufficient evidence for determining whether to prepare an environmental impact statement (EIS) or a finding of no significant impact (FONSI). It may also be used as evidence of compliance with NEPA when no EIS is necessary, and to facilitate preparation of an EIS when one is necessary.

c. The environmental Impact Statement (EIS).

The EIS shall be prepared to meet the requirements of the CEQ Regulations, DAO 216–6 and this Directive. It shall meet the requirements of Chapter 5.5 of this Directive.

3. Timing

Preparation of the documentation of environmental impacts shall begin immediately after the initial identification that assistance may be requested from EDA. Figure 2 illustrates how NEPA compliance fits into the EDA process.

4. Reassessment

a. As the project develops through the various Agency decision points, all environmental considerations shall be periodically reevaluated by the Regional Environmental Officer. The EA shall be reassessed even if there has been no major change in project scope or environmental impact. For example, if the initial assessment was made on a preapplication and resulted in a FONSI, a reassessment would be made upon receipt of an application. Reassessments are necessary because new relevant information, such as the availability of an historic structure eligibility report, may be developed or becomes available as an action proceeds. Other reassessment shall be made as deemed necessary by the responsible official.

b. A reassessment can be documented by anything from a new signature and date on an assessment to the preparation of a new assessment or an EIS.

BILLING CODE 3510-24-M

FIGURE 2. NEPA IN EDA PLANNING PROCESS

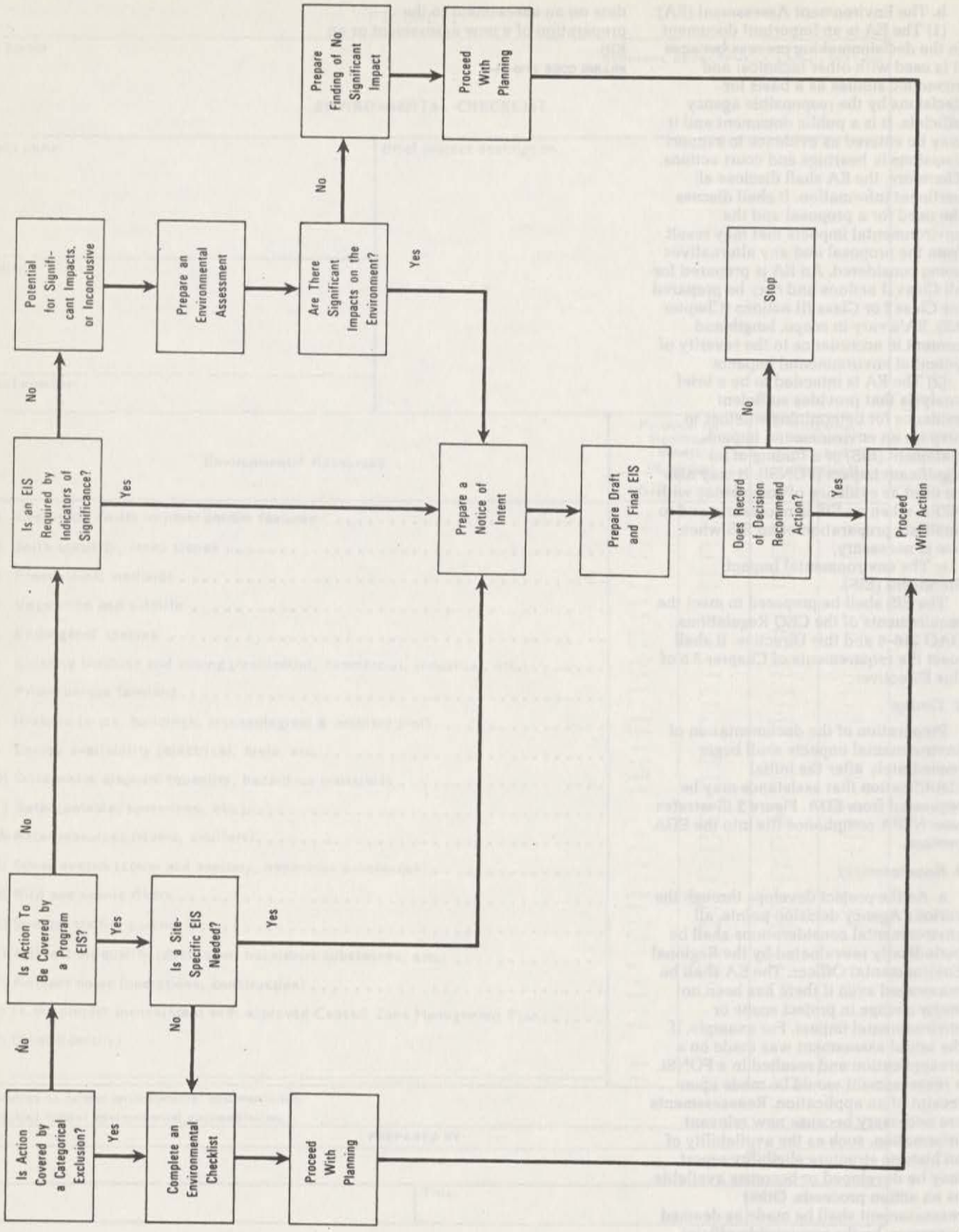

BILLING CODE 3510-24-C

Chapter IV. The Finding of No Significant Impact (FONSI)

1. Definition

A finding of no significant impact (FONSI), Figure 3, is a document briefly presenting the reasons why an administrative decision is being made based upon the environmental assessment (EA) that the proposed action is not considered a major Federal action having a significant impact on the quality of human environment and, therefore, not requiring the preparation of an environmental impact statement (EIS). As necessary, other findings such as those required by the Floodplain/Wetland Directive, shall be incorporated into the FONSI to reduce paperwork.

2. Distribution

A copy of FONSI shall be: placed in the official project file, the environmental file, made publicly available pursuant to Section 1501.4(e)(1) and (2) of the Regulations and in accordance with DAO 216-6, a copy shall be sent to the Environmental Protection Agency and the Office of Environmental Affairs through the Special Assistant for the Environment.

Figure 3. Sample finding of no significant impact.

Finding of no Significant Impact—Memorandum for the Project File

FROM: (Insert name), Regional Director/Special Assistant for the Environment.
SUBJECT: Environmental Impact Determination and Necessary Environmental Findings for (Insert name and number of project).

An environmental assessment has been prepared for the subject project and is attached. After reviewing the assessment and the supporting materials, I find that for the following reasons the subject project will not significantly affect the quality of the human environment. (Give reasons.)

Therefore, the preparation of an environmental impact statement is not necessary.

Chapter V. Planning and Processing Environmental Impact Statements (EIS)

1. Types of EISs

There are three types of EISs that are likely to be prepared by EDA. They are:

a. Project.—Most EISs are prepared to assess the impacts from a single action proposed for funding by EDA.

b. Program.—Programmatic EISs cover actions which have relevant similarities, such as common timing, impacts, alterations, methods of implementation, or subject matter. They may evaluate new or existing programs or actions which have few known specifics and scopes which are difficult to determine. An example of this in EDA would be applications to support actions which result in the same types of environmental impact such as small scale alcohol plants.

c. Legislation.—EISs on legislative proposals are required when EDA develops or provides significant cooperation or support to the proposed legislation (such as the National Public Works and Economic Development Act) which would result in significant impacts on the human environment. Legislative EISs shall meet the requirements of DAO 216-6.

2. Stages of EIS Development

An EIS is developed in several stages. They follow the following sequence.

2.1 Preliminary Draft EIS

The preliminary Draft EIS is a working draft circulated for internal EDA review and, as appropriate, to cooperating agencies. It meets, subject to review, all the requirements of a draft EIS.

2.2 Draft EIS (DEIS)

The DEIS is prepared in accordance with the scope decided upon in the scoping process. It identifies and analyzes the anticipated environmental impacts of a proposed action and its alternatives and discusses how the adverse impacts will be mitigated. It includes comments of cooperating agencies as appropriate. The DEIS must fulfill and satisfy to the extent possible the requirements of a final environmental impact statement (FEIS). It is filed with EPA and circulated to appropriate parties in accordance with CEQ Regulations.

2.3 Preliminary Final EIS

The preliminary final EIS is a working document circulated for internal EDA review and, as appropriate, to cooperating agencies. It meets, subject to review, all the requirements of an FEIS. It also includes comments received during review of the draft EIS.

2.4 Final EIS

The final EIS is based on the draft EIS and contains the Agency's response to comments received on the DEIS. The final EIS is circulated for public review and comment in accordance with CEQ Regulations.

2.5 Supplemental EIS

A supplemental EIS is subject to the same requirements as a draft or final EIS. Supplements to draft or final EISs shall be prepared if:

"(i) There are substantial changes in the proposed action that are relevant to environmental concerns; or

(ii) There are significant new circumstances or information relevant to environmental concerns and bearing on the proposed action or its impacts (1502.9)(c)(1))."

2.6 Additonal Information.

Additional information addressing environmental concerns pertinent to a particular project (updated noise, air quality, historic, public or employee health studies or data, etc.) may be made available to the public at any time during the EIS process. Such information may have a direct bearing on project impacts and would fulfill EDA's duty to disclose relevant project information. It does not result in a substantial change in the scope of the project or reveal new information which would result in substantial changes in environmental impacts resulting from the project as proposed. Should the information or data result in either condition referenced above, see supplemental EIS section. Additional information shall be:

a. Sent to the EPA Regional Office;

b. Filed with the Office of Environmental Review as the official repository for NEPA documents;

c. Filed with the Regional Environmental Officer for appropriate distribution;

d. Filed with the Special Assistant;

e. Mailed to all recipients of the draft or final EIS;

f. Included in the public record used by the decisionmaker; and

g. Made available in selected locations with the draft and final EIS for public inspection.

3. Timing and Planning of the EIS

3.1 Sequence of timing

Figure 4 presents the timing-sequence of action related to EIS preparation. it indicates the sequence of appropriate actions that must be taken in order to facilitate preparation of the EIS.

BILLING CODE 3510-24-M

FIGURE 4

SEQUENCE OF ACTIONS RELATED TO EIS PREPARATION

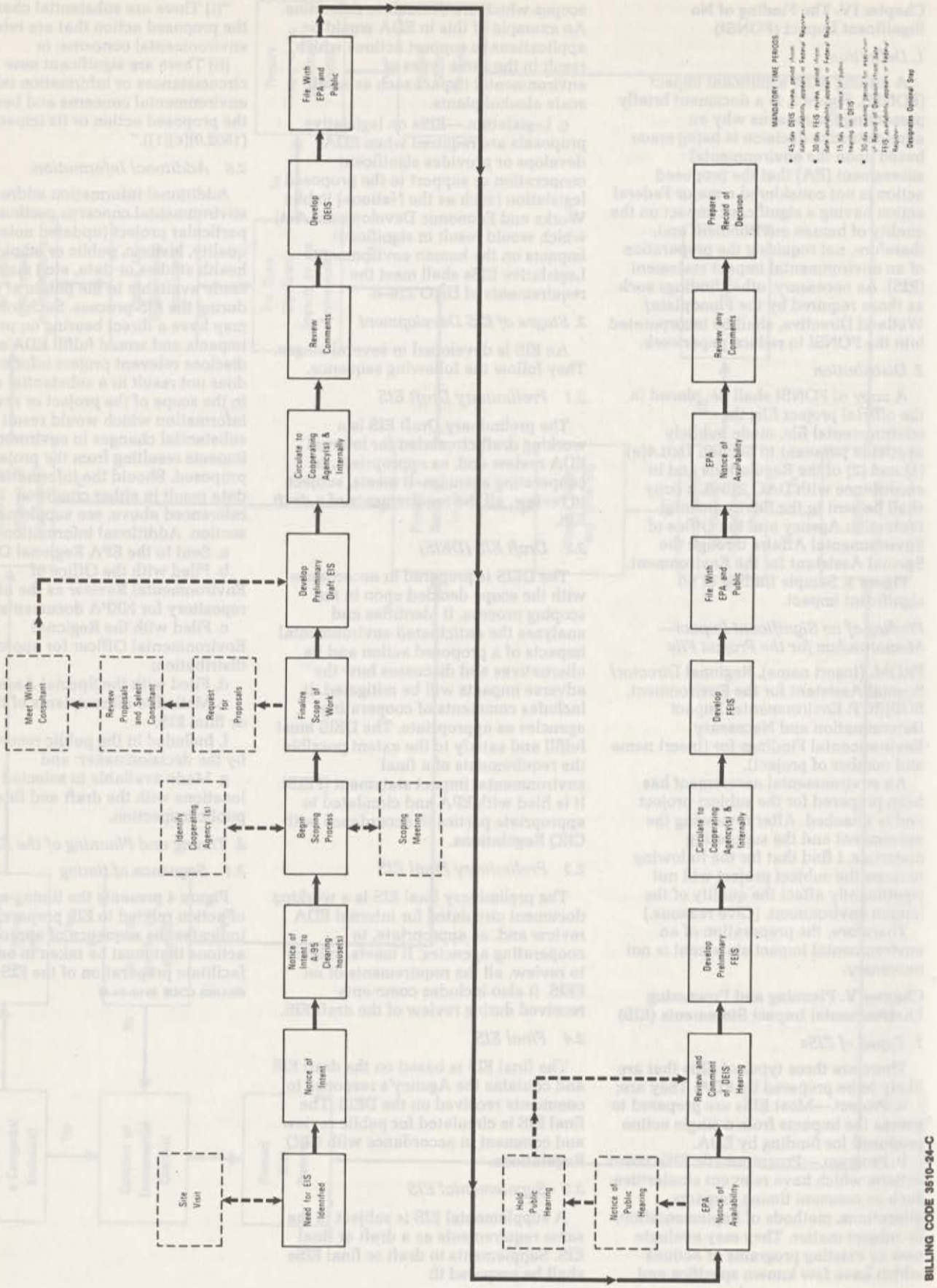

BILLING CODE 3510-24-C

3.2 Timing.

Section 1502.5 of the CEQ Regulations requires:

"An agency shall commence preparation of an environmental impact statement as close as possible to the time the agency is developing or is presented with a proposal (Sec. 1508.23) so that preparation can be completed in time for the final statement to be included in any recommendation or report on the proposal. The statement shall be prepared early enough so that it can serve practically as an important contribution to the decisionmaking process and will not be used to rationalize or justify decisions already made. . ."

3.3 Early Planning

Immediately after an environmental assessment or an environmental checklist has been prepared on an action and a determination has been made that the action is a major Federal action significantly affecting the quality of human environment, the Regional Environmental Officer shall begin the preparation of the environmental impact statements (EIS).

3.4 Notice of Intent

a. A notice of intent to prepare an EIS shall be prepared for publication in the **Federal Register.** For actions subject to OMB Circular A–95, notification under this procedure will include the statement that an EIS will be prepared.

b. The notice shall briefly:

(1) Describe the proposed action and alternatives;

(2) Include the name and address of the responsible Agency official;

(3) If a scoping meeting (see paragraph 4.6 below) is not planned, the notice shall request written comments regarding the scope of the EIS;

(4) The Regional Director shall transmit the notice to the Special Assistant for submission to the **Federal Register.**

3.5 Initiating the Scoping Process

Scoping is a process by which other Federal agencies, the public and the applicant are invited, through meetings or correspondence, to identify the significant issues to be addressed in assessing the proposed action and alternatives. Conversely this process also identifies those issues or impact areas to be given nominal attention in the EIS.

a. As soon as possible after, or concurrent with, the publication of the notice of intent in the **Federal Register,** the Regional Director shall begin the scoping process. The scoping process shall be accomplished in accordance with the CEQ Regulations and OMB Circular A–95.

b. The public involvement requirements listed in Section 1506.6(b) of the Regulations shall be considered by the Regional Environmental Officer as the means to inform the public about the scoping process.

c. The Environmental Protection Agency, the A–95 Clearinghouses, the local planning authority, the State Historic Preservation Officer and the applicant and other interested parties with identified interests in the project shall always be informed about the scoping meeting.

3.6 How To Hold a Scoping Meeting

Scoping meetings shall conform to the following conditions:

a. The meeting shall be opened by the Regional Environmental Officer or appropriate EDA official who will act as moderator with a brief presentation on the proposed action.

b. The meeting shall not be used as a forum to debate the merits of the proposed action.

c. The interested participants shall be asked to register by mail or in person for an opportunity to make a presentation at the meeting. They shall be allowed to speak in the order of registration and shall be followed by those who have not registered.

d. A time limit, not to exceed ten minutes, shall be established for each oral presentation. (This condition may be modified by the moderator of the meeting.)

e. Written comments shall be accepted for incorporation into the record at the meeting and for ten workdays following the meeting.

f. A verbatim transcript or recording of the meeting shall be made a part of the administrative record and be available to the public for review or purchase at cost.

3.7 Completing the Scoping Process

The scoping process shall be considered complete when the provisions of Section 1501.7(a)(2) through 1501.7(a)(7) of the CEQ Regulations have been accomplished.

4. Content of EIS's

4.1 Preliminary Draft EIS and Preliminary Final EIS

A detailed document which identifies and analyses the anticipated environmental impacts of a proposed action and its alternatives and discusses how the adverse effects will be mitigated. They are internal working documents which after review result in Draft or Final EIS.

4.2 The Final EIS

The final EIS shall reflect the data and substantive comments submitted on the draft EIS by other Federal agencies, State and local officials, individuals and groups and the EDA responses to those comments.

a. If changes in response to comments are minor and are confirmed to factual corrections and explanations as to why the comments do not require further agency response, the final EIS circulated to the EPA regional offices and the public shall be composed of:

(1) A new cover sheet;

(2) Errata sheets;

(3) Comments received on the draft, EIS; and

(4) Responses to the comments.

The five copies filed with the EPA Office of Environmental Review shall be affixed to copies of the Draft EIS.

There exists a subtle but significant difference between "circulating" and "filing" an EIS. Statements are filed with the EPA Office of Environmental Review, as an official repository, and circulated to the public and EPA regional offices.

b. If changes in the draft EIS exceed the conditions in subparagraph 5.2a, above, the following requirements apply to the final EIS:

(1) Changes and additions to the text of the draft EIS shall be marked by a vertical line in the margin, unless the final EIS differs substantially from the draft EIS;

(2) Where opposing professional views and responsible opinions have been overlooked in the draft EIS and are then brought to the Agency's attention, the action should be reviewed and a meaningful reference made in the final EIS to opposing views as well as EDA's position on the issues raised;

(3) All substantive comments received on the draft EIS (or summaries thereof when comments have been exceptionally voluminous) shall be addressed in the final EIS. All comments whether or not they are considered to merit individual discussion in the text of the statement shall be attached to the final EIS; and

(4) Where appropriate, substantive comments on the draft EIS should be correlated to the text of the final EIS by placing a page or section number in the margin of the comment designating the location of the proper response.

4.3 Preparation of Supplemental Draft or Final EIS's

a. Responsible EDA program officials shall be familiar with any substantive changes in the proposed action or significant new information that

becomes available concerning potential environmental impacts. These circumstances shall be evaluated by the Regional Environmental Officer to determine if a supplemental draft or final EIS is required.

b. If a supplemental EIS is required it shall be prepared, processed, and circulated for public review in the same manner as a draft or final EIS.

5. Processing an EIS

5.1 Regional Environmental Officer Review of Preliminary Draft EIS

The Regional Environmental Officer shall review Preliminary Draft EISs for content, scope, and accuracy of presentation. The Regional Environmental Officer shall forward the Preliminary Draft EIS to the Special Assistant and any cooperating agencies for their review.

5.2 Program Area Review of Preliminary Draft EIS

Responsible officials in the program area shall review the Preliminary Draft EIS with special attention to the validity and adequacy of project information.

5.3 Special Assistant Review of Preliminary Draft EIS

All comments made by the Special Assistant shall be incorporated in the Draft EIS. Those not incorporated shall be resolved with the Special Assistant prior to publication. If no comments are made within ten (10) work days of receipt, it can be assumed the Special Assistant has no comments to make.

5.4 Draft EIS

Regional Environmental Officer assures that comments made on the preliminary EIS have been incorporated into the draft EIS. If this has been done, the Regional Environmental Officer shall proceed with publication in the **Federal Register** and circulation in accordance with this Directive.

5.5 Preliminary Final EIS and Final EIS

Preliminary Final EISs and Final EISs shall be processed in the same manner as preliminary draft and draft EIS, respectively.

5.6 Limits on Administrative Actions

No final decision shall be made on a project until the latter of the following dates:

(1) Ninety calendar days following publication of the notice of availability of the draft EIS in the **Federal Register**;

(2) Thirty calendar days after publication of the notice of availability of the final EIS in the **Federal Register**; and

(3) The time when the record of decision has been prepared, signed and made available to the public.

5.7 Record of Decision

The record of decision shall:

a. Be signed by the Regional Director or Assistant Secretary following the 30 day review period for the final EIS. The record of decision may be incorporated into the EDA Form ED–506;

b. State what the decision was;

c. Identify all alternatives considered by the Agency in reaching its decision and specify the alternative or alternatives which were considered to be environmentally preferable. It may discuss preferences among alternatives based on relevant factors including environmental, economic and technical considerations and agency statutory missions. The record of decision shall identify and discuss all such factors including any essential considerations of national policy which were considered by the agency in making its decision and state how those considerations entered into its decision;

d. State whether all practicable means to avoid or minimize adverse environmental impacts from the alternative selected have been adopted, and if not, why they were not. A monitoring and enforcement program shall be adopted and summarized where applicable for any mitigation;

e. Be accompanied by a copy of the final or supplemental EIS as appropriate.

Chapter VI. Public Information and Involvement

1. Requirement

The National Environmental Policy Act and CEQ Regulations require that the public be offered an opportunity to be informed about and involved in Federal actions that may significantly affect the quality of the human environment before decisions are made to implement the actions.

2. Input to the Environmental Assessment (EA)

The public, Federal and State agencies shall be asked to provide, to the extent possible, input to the EA. Examples of acceptable methods are contact through the A–95 process or public notice in local newspapers with request for written comments.

3. Review of the Finding of No Significant Impact (FONSI)

If the EA results in the preparation of a FONSI, public notice of the FONSI shall be made (pursuant to § 1501.4(e) (1) and (2) of the Regulations) and the FONSI shall be available in the Regional Office for public review and comment prior to initiating the action.

4. Notice of Intent

If the EA shows that an EIS is needed or the action is an action which normally requires an EIS, a notice of intent to prepare an EIS shall be prepared and published as described in Chapter V, paragraph 4.4.

5. List of Interested Groups

The Regional Environmental Officer shall maintain a list of groups who are known to be interested in EDA activities and a list of individuals and groups who have requested an opportunity to comment on a project or action for subsequent distribution of the EA or EIS.

6. Distribution and Review of The Draft Environmental Impact Statement (EIS)

a. The office that prepares the EIS shall be responsible for printing of the EIS and preparing the appropriate transmittal letters for its distribution.

b. The Regional Director or Special Assistant shall sign EIS transmittal letters to appropriate local officials, Federal, state and local agencies, special interest groups and the public for review and comment. Comments shall be solicited from appropriate state, regional or metropolitan clearinghouses in accordance with procedures prescribed by the OMB Circular A–95, Revised, unless the Governor of the state involved has designated some other point for obtaining the review.

c. Federal agencies which have jurisdiction by law or special expertise with respect to any environmental impact or which are authorized to develop and enforce environmental standards shall be asked to comment on draft EISs.

d. The responsible official shall submit five copies each of all draft EISs to the Central Office of EPA and five copies to the appropriate regional office of EPA.

7. Commenting Period

A minimum of 45 calendar days from the publication of availability in the **Federal Register** by EPA shall be provided for comment on the draft EIS. The magnitude and complexity of the EIS and the extent of citizen interest in the proposed action shall be considered when the commenting period is established. Commenting periods may be extended an additional 15 calendar days at the discretion of the responsible official. Comments not received within the allotted commenting period will not normally be responded to in the text of the final EIS.

8. EIS Availability

a. The Environmental Protection Agency (EPA) will publish in the **Federal Register** lists of environmental impact statements received during the preceding week which are available for public comment. The **Federal Register** date of the notice of availability establishes the availability date of the draft EIS and the beginning date from which the 45-day minimum review period will be calculated.

b. In addition to the **Federal Register**, a notice for a draft EIS shall be published in one or more local newspapers of general circulation in the project area by the office which prepared the EIS. The newspaper(s) may be issued weekly and may be very local in nature, if appropriate. If a public hearing will be held for the proposed action, the notice of the public hearing and notice of EIS availability should be when possible combined into one notice. EISs shall be made available to the public without charge to the extent practicable or at a fee which is not more than the cost of reproduction. The draft EIS will also be made available for public review in local Regional Offices and the applicant's facilities if possible.

9. Distribution and Review

a. The responsible official shall send copies of the final EIS, with comments attached, to all Federal, state and local agencies and private organizations, clearinghouses, and individuals that made substantive comments on the draft statement and to individuals who request a copy of the final EIS. In all cases, five copies of the final EIS shall be sent to both the Environmental Protection Agency's headquarters and regional offices, to assist it in carrying out its responsibilities under Section 309 of the Clean Air Act. Where the number of comments on a draft EIS is such that distribution of the final EIS to all commenting entities appears impracticable, the Regional Environmental Officer will consult with the Special Assistant concerning alternative arrangements for distribution of the statement.

b. A minimum of 30 calendar days shall be provided for comment on the final EIS. The date the review period begins is determined in the same manner as for the draft EIS in subparagraph 8.

10. Record of Decision

For actions requiring an EIS at the time of a decision to take an action, or, if appropriate, make a recommendation to the Congress, a publicly available record of decision shall be prepared in compliance with § 1505.2 of the CEQ Regulations. It shall be signed by the Regional Director under whose jurisdiction the action is being planned or the Assistant Secretary. The record of decision may be incorporated into EDA Form 506 and shall not be signed prior to the expiration of the 30-day review period for the final EIS.

11. Public Hearings

a. Prior to the distribution of a draft EIS for an action, a determination shall be made by the responsible official regarding whether a public hearing should be held. This determination shall be documented and attached to the draft EIS. The following factors shall be considered in determining whether a public hearing is appropriate:

(1) The magnitude of the proposal in terms of economic costs, geographic area involved, and the uniqueness or size of commitment of resources;

(2) The degree of interest in the proposal as indicated by requests from the public and Federal, state and local authorities that a hearing be held;

(3) The complexity of the issues and the likelihood that information will be presented at the hearing which will be of assistance to the Agency in fulfilling its responsibilities under NEPA; and

(4) The extent to which public involvement already has been achieved with respect to environmental concerns through other means, such as earlier public hearings, meetings with citizen representatives, and/or written comments on the proposed action.

b. The draft EIS shall be made available to the public at least 15 calendar days prior to the hearing.

c. The notice of public hearing shall be issued no later than five workdays after distribution of the draft EIS and shall be published in a local newspaper of general circulation at least 15 calendar days prior to the date of the hearing. The notice shall contain but is not necessarily limited to the following:

(1) The date, time, place and purpose of the hearing;

(2) A description of the proposal;

(3) A statement that any person or organization desiring to comment on the draft EIS will be given an opportunity to be heard;

(4) The location and times where the draft EIS will be available for review by the public;

(5) The Federal agency or agencies or agencies sponsoring the project; and

(6) The name, address and telphone number of the EIS Coordinator.

d. A verbatim transcript or recording of the hearing shall be kept.

e. Where necessary a reasonable time limit may be established for each speaker.

f. An open meeting to acquaint and inform the public about the actions or receive information from the public may be held anytime within the NEPA process if it is considered necessary.

12. Public Contact

For general information or status reports on EISs and other elements of the NEPA process for EDA actions, members of the public should contact the Special Assistant for the Environment, Room 7217, U.S. Department of Commerce, Washington, D.C. 20230.

13. Other Public Notice

If it is decided that an EIS is not necessary for a proposed action which (1) normally would require an EIS as set out in Chapter II, (2) is similar to actions for which a significant number of statements have been prepared, or (3) has previously been announced as the subject of a statement, the responsible official shall prepare a FONSI setting forth the decision and the reasons for the decision. The FONSI and the EA shall be made publicly available for thirty days prior to taking any action. The public shall be notified in the same manner in which a notification of intent is publicized (see paragraph 8(b) above).

Where a Notice of Intent has been issued and a decision subsequently made not to do an EIS, a second notice shall be published in the **Federal Register** officially withdrawing the decision to prepare the EIS.

14. Effect on Other Directives

This Directive supersedes EDA Directive 17.02-2 of July 16, 1976 (SN-352). Until final approval of Chapter VII, Protection and Enhancement of Historic and Cultural Properties, is received from the Advisory Council on Historic Preservation, EDA shall continue to utilize as interim procedures the material presented in Chapter VII of the procedures published for public review and comment on June 17, 1980 (45 FR 41028).

[FR Doc. 80-28212 Filed 9-23-80; 8:45 am]
BILLING CODE 3510-24-M

Foreign-Trade Zones Board

[Docket No. 13-80]

Proposed Foreign-Trade Zones—Wilmington and Morehead City, N.C.

Notice is hereby given that an application has been submitted to the Foreign-Trade Zones Board (the Board)

by the North Carolina State Department of Commerce (NCDC), a state public agency, and grantee of FTZ No. 57, Charlotte, requesting authority to establish general-purpose foreign-trade zones in Wilmington and in Morehead City, North Carolina, within the Wilmington Customs port of entry and within and adjacent to the Beaufort-Morehead City Customs ports of entry.

The application was submitted pursuant to the provisions of the Foreign-Trade Zones Act of 1934, as amended (19 U.S.C. 81a–81u), and the regulations of the Board (15 CFR Part 400). It was formally filed on September 17, 1980. The applicant is authorized to make this proposal under Chapter 55c of the General Statutes of North Carolina.

In the Port of Wilmington, NCDC proposes to establish a foreign-trade zone consisting of two sites within the Wilmington Terminal area, which covers 350 acres in the city of Wilmington. The North Carolina State Ports Authority's office at the terminal is located at 2208 Burnette Blvd. Site 1, covering 24 acres, is adjacent to ocean vessel berths and contains 11 acres of warehouses and cargo shelter and 13 acres of open space. Site 2 is on 12 acres at the north end of the Terminal area on land available for expansion and industrial development.

A dual-site zone is also proposed for the Port of Morehead City. The first site is located in the 154-acre Morehead City Terminal, Arendell Street, Morehead City, within the Customs port of entry. It consists of a 92,600 square foot warehouse and an additional 4 acres of open space. The second site is a 40-acre tract of undeveloped port land 4 miles west of the port near the intersection of U.S. Route 70 and State Route 24, Carteret County, N.C., and adjacent to the Customs port of entry. The site will be used for bulk storage and future expansion and industrial development.

The application contained evidence concerning the need for zone services in the Wilmington and Morehead City areas. Prospective tenants have indicated their intent to use the zone for storage and distribution of chemical products, construction equipment, auto components, tobacco, rugs and thread.

The designated administrator for the zones in both ports will be the North Carolina State Ports Authority. The operator for the Wilmington zone will be the Wilmington Port Authority, which holds long-term leases for both zone sites with the U.S. Maritime Administration. The designated operator in Morehead City will be the Morehead City Port Authority. The land for the Morehead zone sites is owned by the State Ports Authority.

In accordance with the Board's regulations, an Examiners Committee has been appointed to investigate the application and report to the Board. The committee consists of David L. Binder (Chairman), Acting Director, Office of Investigations, Import Administration, U.S. Department of Commerce, 14th and E Streets, N.W., Room 2104, Washington, D.C. 20230; James R. Cahill, Director, Inspection and Control Division, U.S. Customs Service, Region IV, 99 S.E. 5th Street, Miami, Florida 33131; and Colonel Robert K. Hughes, District Engineer, U.S. Army Engineer, District Wilmington, P.O. Box 1890, Wilmington, North Carolina 28402.

Comments concerning the proposed zones are invited in writing from interested persons and organizations. They should be addressed to the Board's Executive Secretary at the address below and postmarked on or before October 27, 1980.

A copy of the application is available for public inspection at each of the following locations:

U.S. Customs District Office, 2094 Polk Street, Wilmington, North Carolina 28401.

Office of the Executive Secretary, Foreign-Trade Zones Board, U.S. Department of Commerce, 14th and E Streets NW., Room 2006, Washington, D.C. 20230.

Dated: September 18, 1980.

John J. Da Ponte, Jr.,

Executive Secretary, Foreign-Trade Zones Board.

[FR Doc. 80-29573 Filed 9-23-80; 8:45 am]

BILLING CODE 3510-25-M

International Trade Administration

Computer Peripherals, Components and Related Test Equipment Technical Advisory Committee; Partially Closed Meeting

Pursuant to Section 10(a)(2) of the Federal Advisory Committee Act, as amended, 5 U.S.C. App. (1976), notice is hereby given that a meeting of the Computer Peripherals, Components and Related Test Equipment Technical Advisory Committee will be held on Thursday, October 9, 1980, at 9:30 a.m. in Room 6802, Main Commerce Building, 14th Street and Constitution Avenue, N.W., Washington, D.C.

The Computer Peripherals, Components and Related Test Equipment Technical Advisory Committee was initially established on January 3, 1973. On December 20, 1974, January 13, 1977, August 28, 1978, and August 29, 1980 the Assistant Secretary for Administration approved the recharter and extension of the Committee, pursuant to Section 5(h)(1) of the Export Administration Act of 1979, 50 U.S.C. App. 2401 *et seq.* and the Federal Advisory Committee Act.

The Committee advises the Office of Export Administration, with respect to questions involving (A) technical specifications and policy issues relating to those specifications which are of concern to the Department, (B) worldwide availability of products and systems, including quantity and quality, and actual utilization of production technology, (C) licensing procedures which affect the level of export controls applicable to computer peripherals, components and related test equipment, or technology, and (D) exports of the aforementioned commodities subject to unilateral and multilateral controls in which the United States establishes or in which it participates including proposed revisions of any such multilateral controls.

The Committee meeting agenda has four parts:

General Sessions

1. Opening remarks by the Chairman.
2. Presentation of papers or comments by the public.
3. Discussion of the initial draft by each subcommittee for the 1980 Committee Report:
   (A) Memory and Media,
   (B) Foreign Availability, and
   (C) Display and Terminals.

Executive Session

4. Discussion of matters properly classified under Executive Order 11652 or 12065, dealing with the U.S. and COCOM control program and strategic criteria related thereto.

The General Session of the meeting is open to the public, at which a limited number of seats will be available. To the extent time permits members of the public may present oral statements to the Committees. Written statements may be presented at any time before or after the meeting.

With respect to agenda item (4), the Assistant Secretary of Commerce for Administration, with the concurrence of the delegate of the General Counsel, has formally determined on September 16, 1980, pursuant to Section 10(d) of the Federal Advisory Committee Act, as amended by Section 5(c) of the Government in the Sunshine Act, P.L. 94–409, that the matters to be discussed in the Executive Session should be exempt from the provisions of the Federal Advisory Committee Act relating to open meetings and public participation therein, because the Executive Session will be concerned with matters listed in 5 U.S.C. 552b(c)(1). Such matters are specifically authorized

under criteria established by an Executive Order to be kept secret in the interest of national defense or foreign policy. All materials to be reviewed and discussed by the Committee during the Executive Session of the meeting have been properly classified under Executive Order 11652 or 12055. All Committee members have appropriate security clearances.

The complete Notice of Determination to close meetings or portions thereof of the series of meetings of the Computer Peripherals, Components and Related Test Equipment Technical Advisory Committee and of any subcommittees thereof is hereby published.

Copies of the minutes of the General Session will be available by calling Mrs. Margaret Cornejo, Office of the Director of Licensing, Office of Export Administration, U.S. Department of Commerce, Washington, D.C. 20230, phone 202-377-2583.

For further information contact Mrs. Cornejo either in writing or by phone at the address or number shown above.

Dated: September 18, 1980.

Kent N. Knowles,

Director, Office of Export Administration, International Trade Administration, U.S. Department of Commerce.

Computer Peripherals, Components and Related Test Equipment Technical Advisory Committee

Notice of Determination

In response to written requests of representatives of a substantial segment of the computer peripherals, components and related test equipment industry, the Computer Peripherals, Components and Related Test Equipment Technical Advisory Committee was established by the Secretary of Commerce pursuant to Section 5(h)(1) of the Export Administration Act of 1979 (50 U.S.C.A. App. 2401 *et seq.* (Supp. 1979)), to advise the Department of Commerce with respect to questions involving (A) technical specifications and policy issues relating to those specifications which are of concern to the Department, (B) worldwide availability of products and systems, including quantity and quality, and actual utilization of production technology, (C) licensing procedures which affect the level of export controls applicable to computer peripherals, components and related test equipment, or technology, and (D) exports of the aforementioned commodities subject to unilateral and multilateral controls in which the United States establishes or in which it participates, including proposed revisions of any such multilateral controls.

The Committee, which currently has thirteen members representing industry and nine members representing government agencies, will terminate no later than September 29, 1981, unless extended by the Secretary of Commerce or his designee. All members of the Committee have the appropriate security clearances.

The Committee's activities are conducted pursuant to section 5(h) of the Export Administration Act of 1979; the provisions of the Federal Advisory Committee Act, 5 U.S.C. App. (1976); and the Office of Management and Budget Circular A-63 (Revised), Advisory Committee Management of March 1974. Section 10 of the Federal Advisory Committee Act as amended by section 5(c) of the Government in the Sunshine Act, Pub. L. 94-409, provides that advisory committee meetings or portions thereof may be exempt from the open meeting and public participation requirements of the Federal Advisory Committee Act if the head of the agency to which the advisory committee reports determines that such meetings or portions thereof may be closed to the public in accordance with 5 U.S.C. 552b(c). 5 U.S.C. 552b(c)(1) provides that agency meetings or portions thereof may be closed to the public where they are likely to disclose matters that are specifically authorized under criteria established by an Executive order to be kept secret in the interests of national defense or foreign policy and are in fact properly classified pursuant to such Executive order.

Nine Notices of Determination authorizing the closing of meetings, or portions thereof, of the Computer Peripherals, Components and Related Test Equipment Technical Advisory Committee and its formal subcommittees, dealing with security classified matters, have been approved in the past.

In order to provide advice to the Department under the terms of its charter, the Committee and formal subcommittees thereof will hold a series of meetings dealing with the matters set forth in the first paragraph of this Determination. These meetings will include discussions of the COCOM control list, as it relates to the commodities and technical data under its purview, and with the foreign availability of these commodities and technical data. In addition, the Committee and its formal subcommittees will prepare reports and recommendations for the Department's consideration relating to the U.S. Government's negotiating position on COCOM-related matters. Much of the information relating to the COCOM control list, as well as proposed changes, is now or will be security classified for national defense or foreign policy reasons, pursuant to Executive Order No. 12065, 3 CFR 190 (1979). In order for the Committee and its formal subcommittees to provide required advice to the U.S. Government, it will be necessary to provide the Committee and its formal subcommittees with such classified material. Therefore, the series of meetings or portions of meetings of the Committee and of its subcommittees that will involve discussions of matters specifically authorized under criteria established by an Executive order to be kept secret in the interest of national defense or foreign policy, and are in fact properly classified pursuant to such Executive order, must be closed to the public. The remaining meetings or portions of meetings will be open to the public.

Accordingly, I hereby determine, pursuant to section 10(d) of the Federal Advisory Committee act, as amended by section 5(c) of the Government in the Sunshine Act, Pub. L. 94-409, that the series of meetings or portions of meetings of the Committee and of any subcommittee thereof, dealing with the aforementioned classified materials shall be exempt, for the period from the date of the signing of this Determination, to September 29, 1981, from the provisions of section 10(a)(1) and (a)(3), of the Federal Advisory Committee Act, relating to open meetings and public participation therein, because the Committee and subcommittee discussions will be concerned with matters listed in 5 U.S.C. 552b(c)(1). The remaining series of meetings or portions thereof will be open to the public.

Dated: September 16, 1980.

Guy W. Chamberlin, Jr.,

Acting Assistant Secretary for Administration.

Dated: September 12, 1980.

Alfred Meisner,

General Counsel.

[FR Doc. 80-29515 Filed 9-23-80; 8:45 am]

BILLING CODE 3510-25-M

Office of the Secretary

Interagency Committee on Standards Policy Resolution on Report of the National Policy Advisory Committee (NSPAC)

AGENCY: Assistant Secretary of Commerce for Productivity, Technology, and Innovation.

The Interagency Committee on Standards Policy (ICSP), chartered by the Department of Commerce to advise the Secretary of Commerce and the Heads of other Federal agencies, currently has a voting membership of 23 departments and agencies and an observer from the Office of Management and Budget. Its purpose is to facilitate the effective participation by the Federal Government in domestic and international standards activities, and to promote the development of uniform policies among agencies participating in these activities.

From time to time the ICSP reviews and comments constructively upon proposals for improving the voluntary standards system, particularly any proposal which includes suggestions for improving the Federal Government's role in connection with that system. When it deems it appropriate the ICSP may communicate its views concerning such proposals to the Federal departments and agencies, and occasionally to the interested private sector. Such communications are purely advisory and are not intended to, nor in fact do they represent positions or commitments of the Federal Government or any organizational component thereof. In the light of the ICSP's constructive objective, and as a public service, the following information

is being published in response to a request from the ICSP.

The ICSP has reviewed a proposed national standards policy for the United States developed by the National Standards Policy Advisory Committee (NSPAC), established in 1977 under the auspices of the American National Standards Institute, and published in December 1978. At its plenary session on June 11, 1980 the ICSP adopted the following resolution, with no member dissenting but with one abstention, regarding just the policy aspects of the NSPAC document. (It made no observation with regard to the recommended implementation plan for the proposed national policy which was included as a separate and distinct part of the NSPAC report.)

Resolved, that the ICSP recognizes the efforts of the National Standards Policy Advisory Committee (NSPAC) as a commendable contribution to the establishment and implementation of an effective U.S. national standards policy, and offers to work cooperatively with the private sector to achieve the NSPAC's stated objectives in a timely fashion. It should be noted, however, that the ICSP is disappointed at the delay of the private sector in implementing reforms such as contained in this policy, and would have preferred a stronger statement regarding dupliction in the private sector and provision for a stronger central management structure in the private sector.

As a matter of further information it should be noted that the NSPAC report which was issued over a year before promulgation of OMB Circular A-119 on January 17, 1980, contains recommendations which may be at variance with certain of the policy statements and administrative directives in the Circular. For example, the NSPAC report recommends that the government should give preference in its procurement activities to standards prepared under the standards development process which NSPAC recommended be adopted. The Circular makes no such broad requirement, but only urges Federal departments and agencies to give preference, subject to their administrative discretion, to the use of voluntary standards in procurement actions.

As another example of variances, the NSPAC report recommends that there should be a Federal appeals procedure available for those interests or individuals who believe they have been or will be disadvantaged by a certain voluntary standard or the lack thereof. No distinction is made in that proposal as to whether the appeals procedure should be available to review both substantive and procedural matters. The Circular provides for a voluntary dispute resolution service which is limited to procedural issues.

In the light of such examples of variances it is suggested that anyone interested in the implementing recommendations contained in the NSPAC report would be well advised to compare them with the Federal policies and directives set forth in OMB Circular A-119.

Jordan J. Baruch,

Assistant Secretary for Productivity, Technology, and Innovation.

September 19, 1980.

[FR Doc. 80-29572 Filed 9-23-80; 8:45 am]

BILLING CODE 3510-13-M

CONSUMER PRODUCT SAFETY COMMISSION

[Petition No. CP 77-7]

Football Helmets; Denial of Petition

AGENCY: Consumer Product Safety Commission.

ACTION: Denial of petition.

SUMMARY: The Commission denies a petition requesting it to issue a consumer product safety standard for football helmets in order to reduce the risks of head, neck, and spinal injuries which occur during football play. The Commission denies the petition because it does not believe that a mandatory standard is necessary at this time to reduce any risk of injury associated with football helmets. The Commission notes that a number of organizations are involved in voluntary standards development in this area. In addition, the rate of football deaths from head injuries and the incidence of neck injuries have decreased in recent years due to such factors as rule changes against butting and spearing, improved coaching and officiating, and the use of helmets certified to meet voluntary standards.

FOR FURTHER INFORMATION CONTACT: Douglas L. Noble, Office of Program Management, Consumer Product Safety Commission, Washington, D.C. 20207, 301-492-6453.

ADDRESS: Copies of the petition and staff's briefing materials on the petition may be obtained from the Office of the Secretary, Consumer Product Safety Commission, 1111 18th Street, N. W., Washington, D.C. 20207.

SUPPLEMENTARY INFORMATION:

1. Background

Section 10 of the Consumer Product Safety Act (CPSA), 15 U.S.C. § 2059, provides that any interested person may petition the Consumer Product Safety Commission (CPSC) to begin a proceeding to issue, amend, or revoke a consumer product safety standard or ban. Section 10 also provides that if the Commission denies such a petition, it shall publish its reasons for denial in the **Federal Register.**

By letter dated December 17, 1976, and supplemented by a letter dated January 24, 1977, Dr. A.C. Larcher of Chicago, Illinois petitioned (CP 77-7) the Commission to establish mandatory safety standards for football helmets and shoes. In his submission, Dr. Larcher claimed that the application of cylinder air chambers covered by a softened plastic exterior shell on helmets would reduce head, neck, and spinal injuries.

On March 10, 1978 the Commission denied that part of the petition relating to football shoes on the basis that available information did not support a determination that the design of the shoes contributed to football injuries. (See 43 FR 9843). Action was deferred on that part of the petition relating to helmets because the Commission believed that further investigation by its staff was necessary before a decision on any mandatory standard for helmets could be made.

On January 15, 1980, Frederick Esposito requested that the Commission ban football helmets with a hard finish. This submission was treated as a statement in support of the petition, CP 77-7, in accordance with the Commission's petitioning regulations at 16 CFR 1110.9. (The Commission also received, in April of 1977, a submission from Dungard, Inc. requesting the issurance of a consumer product safety rule for football helmets and accessory parts. This submission was similarly treated as a statement in support of CP 77-7.)

2. Commission Evaluation of the Petition

In analyzing this petition, the Commission considered all available information, including injury data, mechanisms of head and neck injuries, human factors implications of injuries, and voluntary standards activities on football helmets.

The Commission reviewed several sources of injury data associated with organized football at the high school and college levels. The Commission also considered data from the Commission's National Electronic Injury Surveillance System (NEISS), which includes injuries associated with both organized and unorganized football. The Commission did not consider injury data associated with professional football since the Commission is only concerned with

injuries associated with consumer use of products.

Using NEISS, the Commission staff estimated that 397,000 emergency room treated injuries were associated with football activity during 1978. Over a year period (1974–1978), an annual average of 4.3% of the emergency room treated injuries associated with football involved the head, and 1.3% involved the neck. Thirty-three percent of the head injuries were concussions.

The 1978 Annual Survey of Football Fatalities published by the American Football Coaches' Association, the National Collegiate Athletic Association, and the National Federation of State High School Associations, and reviewed by the Commission staff showed that the rate of football fatalities from head injuries has decreased over the period 1970–1978. The sponsors of the survey attributed this decrease to (1) rule changes adopted at the end of the 1975 playing season which prohibit the use of the head ("butting" and "spearing") while tackling in high school and college football, (2) rules which require the wearing of only those helmets approved by the National Operating Committee on Standards for Athletic Equipment (NOCSAE) and (3) improved conditioning programs and skill techniques implemented by coaches and trainers.

The National Football Head and Neck Injury Registry, which was established for the purpose of studying head and neck injuries in organized football, stated that there has been a significant decrease in cervical spine injuries since the 1976 season. The Registry attributed this decrease to the rule changes barring the use of "spearing" and "butting" tackling techniques in high school and college football.

The National Athletic Injury/Illness Reporting System (NAIRS), an association which continuously collects and interprets information on athletic injuries, examined 16,090 high school and college football players under both game and practice conditions during the years 1975 through 1977. The final report of this CPSC-supported effort stated that the evidence does not support helmet causation of associated cervical spine or head injuries. In addition, the NAIRS report stated that no particular "hard-shelled" helmet was associated with a disproportionate number of concussions or cervical spine fractures within those experienced. No skull fractures, permanent brain damage, or deaths were reported among the athletes surveyed in the first three years (1975–1977) of the NAIRS study.

The Commission staff points out that although experts in the area of football safety theorize that "soft-shelled" helmets such as that suggested by the petitioner may offer better shock attenuation than hard-shelled helmets, such helmets may also induce more neck injuries since they may exhibit increased friction in contact with an opponent leading to possible neck twisting. In any case, the staff notes that no study has been done on injuries to players wearing soft-shelled helmets.

Two voluntary standard organizations have been actively involved in the development of test methods and performance criteria on football helmets. The National Operating Committee on Standards for Athletic Equipment (NOCSAE) has established a football helmet standard which was finalized in September, 1973. The American Society For Testing and Materials (ASTM) F. 8.53 Committee on headgear has approved a test method for shock-attenuation characteristics of football helmets and is scheduled to ballot on a football helmet performance standard within six months with a decision on the final standard in the spring of 1981.

The National Collegiate Athletic Association (NCAA), the National Federation of State High School Asssociations (NFSHA) and the National Junior College Athletic Association (NJCAA) rules committees have adopted rules requiring the wearing of only NOCSEA approved helmets in playing football. In addition, the Pop Warner Football League's rules for younger players require the wearing of NOCSAE-approved youth model helmets.

In addition, the Commission staff reported that there are many variables affecting an individual athlete's susceptibility to injury, regardless of the type of helmet that is worn. Some of the variables include age, development, physical abilities, experience, supervision, equipment, psychological factors and training.

3. Conclusion

Based on the foregoing, the Commission has denied the petition requesting mandatory safety standards for football helmets. The Commission is taking this action because it does not believe that a mandatory Commission standard is necessary at this time to address any risk of injury presented by football helmets. The Commission points out that there is extensive involvement of various individuals and organizations in football–related medical research, data collection, and education and information efforts as well as two voluntary standards–development organizations involved in developing test methods and performance criteria for football protective headgear. The Commission believes that in recent years there has been an increased concern for football safety that has been demonstrated by the widespread compliance with rules which (1) call for wearing only NOCSAE approved helmets in high school and college games and (2) forbid using the helmet to "butt", "spear," or "ram" an opponent.

The Commission vote to deny the petition was 4 to 1, with Commissioner Edith Barksdale–Sloan dissenting (Copies of the dissenting opinion are available in the office of the Secretary of the Commission.) The Commission notes that it remains concerned about football injuries associated with noncompetitive or unorganized play and, in discussing the fiscal year 1981 Commission Operating Plan, plans to examine the current project on juvenile sports equipment and decide whether to amend the project, or establish a new project, to focus on football helmets not designed for competitive play.

Dated: September 19, 1980.

Sadye E. Dunn,

Secretary, Consumer Product Safety Commission.

[FR Doc. 80–29626 Filed 9–23–80; 8:45 am]

BILLING CODE 6355–01–M

Product Safety Advisory Council; Meeting

AGENCY: Consumer Product Safety Commission.

ACTION: Notice of Meeting: Product Safety Advisory Council.

SUMMARY: This notice announces a meeting of the Product Safety Advisory Council on Thursday, October 9, 1980, 8:30 a.m.–5 p.m., and Friday, October 10, 1980, 9 a.m.–3 p.m. The meeting will be held at 1111 18th Street, NW., Washington, D.C. 20207, Third Floor Conference Room.

FOR FURTHER INFORMATION CONTACT: Barbara Rosenfeld, Director, Office of Public Participation, Office of the Secretary, Sutie 300, 1111 18th Street, NW., Washington, D.C. 20207, 202/634–7700.

SUPPLEMENTARY INFORMATION: The Product Safety Advisory Council was established by Section 28 of the Consumer Product Safety Act, which provides that the Commission may consult with the Council before prescribing a consumer product safety rule or taking other action under the Act.

The meeting will include orientation for new members of PSAC. On Thursday, June 9, Council members will attend the regularly scheduled

Commission meeting and in the afternoon will meet with the Commissioners to discuss the subject of recalls. On Friday, members will be briefed on CPSC budget, priorities, and field plans for FY 81, and will plan their program for the year.

The meeting is open to the public; however, space is limited. Persons who wish to make oral or written presentation to the Product Safety Advisory Council should notify the Office of the Secretary (see address above) by October 3, 1980. The notification should list the name of the individual who will make the presentation, the person, the company, group or industry on whose behalf the presentation will be made, the subject matter, and the approximate time requested. Time permitting, these presentations and other statements from the audience to members of the Council may be allowed by the presiding officer.

Dated: September 19, 1980.

Sadye E. Dunn,

Secretary, Consumer Product Safety Commission.

[FR Doc. 80-29625 Filed 9-23-80; 8:45 am]

BILLING CODE 6355-01-M

DEPARTMENT OF DEFENSE

Department of the Air Force

Scientific Advisory Board; Meeting

September 12, 1980.

The USAF Scientific Advisory Board Electronic Systems Division Advisory Group will hold meetings on October 17 from 8:30 a.m. to 5:00 p.m. and on October 18 from 8:30 a.m. to 12:00 p.m. at Hanscom Air Force Base, Massachusetts in the Command Management Center, Building 1606.

The Group will receive classified briefings and hold classified discussions on selected Air Froce Command, Control, and Communications Programs. The meetings concern matters listed in section 552b(c) of Title 5, U.S.C., specifically paragraph (1) thereof, and will be closed to the public.

For further information contact the Scientific Advisory Board at (202) 697-8404.

Carol M. Rose,

Air Force Federal Register, Liaison Officer.

FR Doc. 80-29509 Filed 9-23-80; 8:45 am]

BILLING CODE 3910-01-M

Scientific Advisory Board; Meeting

September 15, 1980.

The USAF Scientific Advisory Board Space Division Advisory Group will meet on October 30 & 31, 1980 at the Los Angeles Air Force Station, CA. The purpose of the meeting is to review Satellite Data Management, Global Positioning System Additional Uses, and Space Based Radar. The Group will meet from 8:00 a.m. to 4:00 p.m. each day.

The meeting concerns matters listed in Section 552b(c) of Title 5, United States Code, specifically subparagraph (1) thereof, and accordingly, will be closed to the public.

For further information contact the Scientific Advisory Board Secretariat at (202) 697-8845.

Carol M. Rose,

Air Force Federal Register, Liaison Officer.

[FR Doc. 80-29510 Filed 9-23-80; 8:45 am]

BILLING CODE 3910-01-M

DEPARTMENT OF ENERGY

Bonneville Power Administration

Dickey-Lincoln School Lakes Transmission EIS Project Draft Supplement; Availability of Draft Supplement

Notice is hereby given that the Bonneville Power Administration (BPA) for the Department of Energy, in compliance with the National Environmental Policy Act of 1969, has prepared and is distributing a Draft EIS Supplement on the transmission system for Dickey-Lincoln School Lakes project. This supplement assesses potential environmental impacts associated with construction of proposed additional transmission facilities from Moore Substation, near Littleton, New Hampshire, to Webster Substation, near Franklin, New Hampshire.

These additional facilities (substituted for the original section from Granite Substation near Montpelier, Vermont, to Essex Substation near Burlington, Vermont) permit greater flexibility for development of transmission lines south, east, or west, and were necessitated by changes in load growth and changes in anticipated generating plant construction plans for the region. Integration of generation from the Dickey-Lincoln School Lakes project into the New England power pool system can best be accomplished with a plan of service that includes the new extension. A map of the proposed transmission route is contained in the draft EIS supplement.

Copies of the draft supplement are available for public inspection at Department of Energy public document rooms located at:

Library, FOI—Public Reading Room 5B-180, Forrestal Building, 1000 Independence Avenue S.W., Washington, D.C.;

BPA, Washington, D.C., Office, Room 3352, Federal Building, 12th and Pennsylvania Avenue N.W., Washington, D.C.

Copies will also be located in 70 depositories in New England; a complete list appears in the draft supplement.

The draft supplement is being furnished to Federal, States, and local agencies with environmental expertise, and to those likely to be interested in, or affected by, the proposed program. Copies of the document are also being furnished to State and local clearinghouses and to other interested groups and individuals.

Single copies are available upon request; contact Timothy J. Murray, Assistant Project Manager for Environmental Studies, Bonneville Power Administration, P.O. Box 3621—ETMC, Portland, Oregon 97208.

Notice of public hearings on this document will be published in the **Federal Register** at a later date.

Dated at Washington, DC, this 18th day of September 1980.

George E. Bell,

Assistant Administrator.

[FR Doc. 80-29469 Filed 9-23-80; 8:45 am]

BILLING CODE 6450-01-M

Economic Regulatory Administration

Canadian Crude Oil Allocation Program Allocation Notice for the Oct. 1 Through Dec. 31, 1980, Allocation Period

In accordance with the provisions of the Mandatory Canadian Crude Oil Allocation Regulations, 10 CFR Part 214, the Economic Regulatory Administration (ERA) of the Department of Energy (DOE) hereby issues the allocation notice specified in § 214.32 for the allocation period beginning October 1, 1980.

The Canadian National Energy Board (NEB) has informed ERA that, effective October 1, 1980, exports of crude oil from Canada will again be authorized on a quarterly basis. Therefore, in this notice, ERA lists the export levels of Canadian light and heavy crude oil for the months of October, November, and December 1980.

Redesignation of Priority Status

On April 17, 1980, the Department of Energy's Office of Hearings and Appeals (OHA) issued a Decision and order with respect to appeals filed by the Mobil Oil Corporation from four allocation notices

issued by ERA under the Canadian Crude Oil Allocation Program. *Mobil Oil Corporation,* Case Nos. DEA–0235, 0387, 0589, and BEA–0035. OHA concluded that ERA erred in not reclassifying Ashland and Koch's Minnesota refineries as second priority refineries for the fourth allocation quarter of 1978 and the second, third, and fourth allocation quarters of 1979.

It is ERA's belief that the legal and factual determinations made by OHA with respect to the Ashland and Koch refineries' access to non-Canadian crude oil in the allocation periods specified above are equally applicable to future allocation periods. Accordingly, on May 16, 1980, Ashland and Koch were formally advised that ERA intended to redesignate the Ashland refinery at St. Paul Park, Minnesota, and the Koch refinery at Pine Bend, Minnesota, second priority refineries for the June 1980 Supplemental Allocation Notice and, with the possible exception of the first allocation quarter in each year, in every subsequent allocation quarter. With respect to the first allocation quarter of each year, ERA intended to make a determination of the refineries' priority status at a later time.

However, in May 1980, the United States District Court for the District of Minnesota enjoined DOE from implementing reclassification of the Koch and Ashland refineries from first priority to second priority status pending a hearing and determination of the motion for a preliminary injunction. On August 18, 1980, the District Court issued a Preliminary Injunction prohibiting DOE from redesignating the Koch and Ashland refineries pending a final determination of the case. Accordingly, Ashland and Koch's Minnesota refineries will retain their first priority status for the October through December 1980 allocation period.

Allocation of Canadian Light Crude Oil

The NEB has formally advised ERA that the total volume of Canadian light crude oil authorized for export to the United States for the months of October, November, and December 1980 and, therefore, subject to allocation under Part 214, will be 50 barrels/day (B/D), all of which is operationally constrained through the Union Oil Pipeline from the Reagan field in Canada to the Flying J, Inc. (formerly ICG Vista) Thunderbird refinery (second priority) at Cut Bank, Montana. Pursuant to 10 CFR 214.35, ERA will give effect to the operational constraint regarding the Thunderbird refinery in the issuance of Canadian crude oil rights for the months of October, November, and December.

Allocation of Canadian Heavy Crude Oil

The NEB has advised ERA that the total volumes of Canadian heavy crude oil authorized for export to the United States, and therefore subject to allocation under Part 214, for the three-month allocation period commencing October 1, 1980, will be as follows: 128,745 B/D for October, 148,345 B/D for November, and 147,685 B/D for December. For purposes of determining allocations of Canadian heavy crude oil, it has been assumed that the average export level will be 141,518 B/D for the three months. Any change in the export levels for Canadian light crude oil including condensate, and Canadian heavy crude oil anticipated for this allocation period will be reflected in revised allocations that will be issued in a supplemental allocation notice or notices.

The October through December 1980 allocable supply of Canadian heavy crude oil is greater than the total number of rights calculated under Section 214.31(a) subparagraphs (3)(i) through (vi). Accordingly the ERA has determined, pursuant to 10 CFR § 214.31(b), that the volume (48,381 B/D) of Canadian heavy crude oil to be exported in October, November, and December in excess of the nominations of priority refiners is surplus for the October 1 through December 31 allocation period and is not subject to the allocation provisions of § 214.31(a)(3).

The issuance of Canadian heavy crude oil rights, expressed in barrels/day, to refiners and other firms nominating for heavy crude oil for the October 1–December 31, 1980 allocation period is as follows:

	Refiner/refinery	Base period volumes[1] Canadian total	Base period volumes[1] Canadian heavy crude	Nomination	Allocation
Priority:					
II	Ashland—Buffalo, NY	36,752	4,719	[2]927	927
II	Ashland—Findley, OH	2,198	2,165	[3]421	421
I	Ashland—St. Paul Park, MN	44,707	4,803	0	0
I	Koch—Pine Bend, MN	74,383	68,692	[4]73,315	73,315
II	Mobil—Buffalo, NY	24,995	0	0	0
II	Mobil—Ferndale, WA	45,444	0	0	0
II	Mobil—Joliet, IL	14,606	12,474	12,474	12,474
I	Murphy—Superior, WI	25,625	5,372	6,000	6,000
Total Priority I					79,315
Total Priority II					13,822
Total I and II					93,137

[1] Base period volume for the purposes of this notice means average number of barrels of Canadian crude oil included in a refinery's crude oil runs to stills or consumed or otherwise utilized by a facility other than a refinery during the base period (Nov. 1, 1974, through Oct. 31, 1975), on a barrels per day basis. For the base period volumes of all priority refineries, see allocation notice issued Dec. 29, 1979 (45 FR 1664, Jan. 8, 1980).

[2] Represents a 2,750 B/D, 1 month (October) nomination pro rated over the entire, 92-day, allocation period.

[3] Represents a 1,250 B/D, 1 month (October) nomination pro rated over the entire, 92-day, allocation period.

[4] Represents Koch's 3-month nomination (50,000) B/D October; 75,000 B/D November and 95,000 B/D December) pro rated over the 92-day allocation period.

On or prior to the thirtieth day preceding each allocation period, each refiner or other firm that owns or controls a first priority refinery shall file with ERA the supplemental affidavit specified in § 214.41(b) to confirm the continued validity of the statements and representations contained in the previously filed affidavit or affidavits, upon which the designation for that priority refinery is based. Each refiner or other firm owning or controlling a first or second priority refinery shall also file the periodic report specified in § 214.41(d)(1) on or prior to the thirtieth day preceding each allocation period, provided, however, that the information as to estimated nominations specified in § 214.41(d)(1)(i) is not required to be reported.

Within 30 days following the close of each three-month allocation period, each refiner or other firm that owns or controls a priority refinery shall file the periodic report specified in § 214.41(c)(2) certifying the actual volumes of Canadian crude oil and Canadian plant condensate included in the crude oil runs to stills, consumed or otherwise utilized by each such priority refinery (specifying the portion thereof that was allocated under Part 214) for the allocation period.

Please note change of address. All reports and applications made under this notice should be addressed to: Chief, Crude Oil Allocation and

production Branch, 2000 M Street, NW., Room 6318, Washington, D.C. 20461.

TWX's may be sent to 710-822-9495 (answer back EVFT] WSH).

Also note that, effective August 15, 1980, the telephone number for the Crude Oil Allocation Branch is changed to 202-653-3420.

This notice is issued pursuant to Subpart G of ERA's regulations governing its administrative procedures and sanctions, 10 CFR Part 205. Any person aggrieved hereby may file an appeal with DOE's Office of Hearings and Appeals in accordance with Subpart H of 10 CFR Part 205. Any such appeal shall be filed on or before 30 days from the publication of this notice.

Issued in Washington, D.C., on September 18, 1980.

Doris J. Dewton,

Assistant Administrator, Office of Petroleum Operations, Economic Regulatory Administration.

[FR Doc. 80-29468 Filed 9-23-80; 8:45 am]

BILLING CODE 6450-01-M

[Docket No. ERA-FC-79-012; OFC Case No. 55119-9044-01-12, 55119-9044-02-12, and 55119-9044-03-12]

Exemptions From the Powerplant and Industrial Fuel Use Act of 1978

AGENCY: Economic Regulatory Administration, Department of Energy.

ACTION: Order granting exemptions from the Prohibitions of the Powerplant and Industrial Fuel Use Act of 1978.

SUMMARY: On October 29, 1979, the General Motors Corporation (GM) filed a petition with the Economic Regulatory Administration (ERA) of the Department of Energy (DOE) for an order granting permanent fuels mixture exemptions for each of three new major fuel burning installations (MFBI's) from provisions of the Powerplant and Industrial Fuel Use Act of 1978 (FUA or the Act) (42 U.S.C. 8301 *et seq.*), which prohibit the use of petroleum or natural gas as a primary energy source in new MFBI's. The petition was filed in accordance with 10 CFR Part 500, *et seq.* of the interim rule implementing the provisions of FUA. ERA published final rules relating to new facilities on June 6, 1980 (45 FR 38276 and 38302), which became effective August 5, 1980.

The MFBI's for which the petition was filed are three identical field-erected boilers, identified by GM as boilers 1, 2 and 3, which are installed at GM's Assembly Division plant, Oklahoma City, Oklahoma. Each boiler has a design heat input rate of 182 million Btu's per hour and is rated at 150,000 pounds of steam per hour. Each boiler has a design capability of burning coal and a mixture of coal and natural gas.

GM petitioned ERA for a permanent fuels mixture exemption under 10 CFR 505.28 to burn a mixture of natural gas and coal in each of the three boilers. GM stated that the amount of natural gas to be used in the proposed fuel mixture will not exceed 25% of the total annual Btu heat input of the primary energy sources used in each boiler. GM submitted a duly authorized certification to that effect for each unit.

Pursuant to Section 212(d) of the Act, and subject to specified terms and conditions stated herein, this order grants permanent fuels mixture exemptions to GM to permit the use of natural gas in a mixture with coal in each of the above identified three boilers.

In accordance with Section 702(a) of the Act, this order shall not take effect earlier than November 24, 1980.

FOR FURTHER INFORMATION CONTACT:

Constance L. Buckley, Chief, New MFBI Branch, Office of Fuels Conversion, Economic Regulatory Administration, 2000 M Street, NW., Room 3128, Washington, D.C. 20461, Phone (202) 653-4226

Kathleen Ewing, Case Manager, New MFBI Branch, Office of Fuels Conversion, Economic Regulatory Administration, 2000 M Street, NW., Room 3119, Washington, D.C. 20461, Phone (202) 653-4258

E. Jiran, Office of the General Counsel, Department of Energy, Forrestal Building, Room 6G-087, 1000 Independence Avenue, SW., Washington, D.C. 20585, Phone (202) 252-2967.

The public file containing a copy of all documents and supporting materials on this proceeding is available for inspection upon request at: ERA, Room B-110, 2000 M Street, NW., Washington, D.C., Monday through Friday, 8:00 a.m.—4:30 p.m.

SUPPLEMENTARY INFORMATION: GM petitioned ERA, on October 25, 1979, for a permanent exemption from the prohibitions of Title II of FUA for each of three new field-erected boilers located at its Assembly Division plant, Oklahoma City, Oklahoma. The petition requested a permanent fuels mixture exemption for each new boiler, identified by GM as boilers 1, 2 and 3, to burn a mixture of natural gas and coal under the provisions of Section 505.28 of ERA's interim rule. In its petition GM demonstrated to the satisfaction of ERA that:

(1) It proposes to use a mixture of natural gas and coal as a primary energy source; and

(2) the amount of natural gas proposed for use in the mixture will not exceed the minimum percentage of the total annual Btu heat input of the primary energy source needed to maintain operational reliability of each installation consistent with maintaining a reasonable level of fuel efficiency.

If a fuels mixture exemption is granted to an MFBI, ERA may not require that the percentage of natural gas (or petroleum) used in the mixture be less than 25% of the total annual Btu heat input of the primary energy sources of the installation.

GM stated that the amount of natural gas to be used in the proposed fuel mixture would not exceed 25% of the total annual Btu heat input of the primary energy sources of each boiler. GM submitted a duly authorized certification to that effect for each unit.

Preceding this determination and the issuance of this order, and in accordance with the procedural requirements of FUA and ERA's implementing interim rule, ERA accepted GM's petition for a permanent fuels mixture exemption for each boiler on November 28, 1979. Notice of that acceptance and a statement of the reasons contained in the petition for requesting the exemptions were published in the **Federal Register** on December 18, 1979 (44 FR 74901), commencing a 45-day public comment period pursuant to Section 701 of FUA. As required by Sections 701 (f) and (g) of the Act, ERA provided a copy of GM's petition to the Environmental Protection Agency and to the Federal Trade Commission for their comments. During this period, interested persons were also afforded an opportunity to request a public hearing. The period for submitting comments and for requesting a public hearing closed on February 1, 1980. No comments were received and a public hearing was not requested.

On July 25, 1980, ERA published in the **Federal Register** a Notice of Availability of a Tentative Staff Determination recommending that GM's petition be granted and providing a 14-day period for interested persons to submit written comments or to request a public hearing (45 FR 49638). That period ended August 8, 1980. Comments were filed only by GM. No public hearing was requested.

In its comments to ERA, GM contended that the amount of fuel excluded from the definition of primary energy source by Section 103(a)(15) of FUA is in addition to any fuel that may be used in boilers 1, 2 and 3 under a fuels mixture exemption.

ERA believes that the statement in the Tentative Staff Determination concerning the amounts of fuel to be

allowed under Section 103(a)(15)(A) of the Act as an exclusion from the definition of primary energy source, where a fuels mixture exemption has been granted, is consistent with the purposes of the Act and within the authority of ERA. Section 103(a)(15) provides that the minimum amounts which are excluded are subject to rules prescribed by the Secretary. In the final rule implementing FUA, in connection with the definition of "Primary energy source" (10 CFR 500.2), ERA has set the excluded amount at zero where a fuels mixture exemption has been granted. The footnote to the definition provides: "For purposes of subparagraph (1), no fuel will be excluded from the definition of primary energy source where a mixtures exemption has been granted under Parts 503 or 504 of these regulations. The minimum amount of natural gas or petroleum provided by a mixtures exemption to maintain reliability of operation, consistent with maintaining a reasonable level of fuel efficiency is in lieu of the minimum amount required for unit ignition, start-up, testing, flame stabilization, and control uses." It should be noted that the rule does not include, as part of the exempt fuel covered by a mixtures exemption, any amount of fuel which could otherwise be excluded from the definition of primary energy source. Whenever, with respect to exemptions other than a fuels mixture, a given amount of excluded fuel is authorized (for example the 15% presumptive exclusion provided for in the final rule) it is in addition to the fuel that is exempt as a primary energy source. ERA has determined that this regulatory treatment (i.e., to set the amount of fuel which could be excluded under Section 103(a)(15) at zero) where a mixtures exemption is granted, best accomodates the purposes of the Act in minimizing the amounts of petroleum and natural gas to be used for congruent purposes.

GM also requested that the recommended term and condition contained in the Tentative Staff Determination that would prohibit the use of petroleum in boilers 1, 2 and 3 be modified to acknowledge GM's right to use petroleum in these MFBI's under the provisions of Subpart M of the final rule.

ERA is at the opinion that pursuant to the provisions of 10 CFR 501.191 and 501.192, and provided that the conditions outlined therein exist, GM may use petroleum in boilers 1, 2 and 3, only to alleviate or to prevent unanticipated outages and emergencies defined in Section 103(a)(15)(B) of the Act or during a temporary emergency condition pursuant to Section 404(g) of the Act. (The term and condition relative to such use has been clarified in this order.)

GM further requested that the amount of natural gas which would be allowed to be used in boilers 1, 2 and 3 under a fuels mixture exemption be applied on an aggregate basis rather than separately to each MFBI.

ERA is unable to adopt this approach because the language of the Act, by its use of the term "major fuel burning installation" in the singular, and by its definition of that term, clearly indicates that the provisions of the Act apply to single units. Exemptions from the prohibitions of the Act are also granted on a unit specific basis and cannot be made applicable to systems without legislative modification of the existing statutory provisions.

Subsequent to the issuance of the Notice of Availability of the Tentative Staff Determination on GM's petition, ERA published a final rule pertaining to new facilities (45 FR 38276 and 38302, June 6, 1980) which became effective on August 5, 1980. Accordingly, this order is issued under the provisions of the final rule. The implementing provisions for the fuels mixture exemption authorized by Section 212(d) of the Act are found at 10 CFR 503.38 of the final rule. ERA has determined that the conclusions reached in the Tentative Staff Determination, prepared under the provisions of the interim rules, are consistent with the provisions of the final rule with the exception of the recommended terms and conditions. Consequently, the terms and conditions of this order incorporate the specific terms and conditions required by 10 CFR 503.38(e).

Nevertheless, ERA has determined that GM has met all requirements for permanent fuels mixture exemptions from the prohibitions of Title II of FUA to enable it to burn a mixture of natural gas and coal in boilers 1, 2 and 3. ERA has also determined that by its certification, GM has demonstrated that the total amount of natural gas in the fuels mixture with coal to be used in each unit does not exceed 25% of the total annual Btu heat input of the primary energy sources of each boiler. GM, therefore, has satisfied the evidentiary requirement of Section 212(d)(1)(B) of the Act.

Pursuant to Section 212(d) of the Act, and subject to the terms and conditions stated below, ERA hereby grants GM permanent fuels mixture exemptions to permit the use of natural gas in a mixture with coal in boilers 1, 2 and 3. As specified in the terms and conditions of this order, the total amount of natural gas used in each boiler shall not exceed 25% of the total annual Btu input of the primary energy sources of each boiler.

This order takes into account the purposes for which the minimum percentage of natural gas provided by a fuels mixture exemption is to be used, i.e., to maintain reliability of operation consistent with maintaining a reasonable level of fuel efficiency.

Accordingly, ERA will not exclude from the defination of primary energy source any fuel used in each boiler for the purposes of unit ignition, startup, testing, flame stabilization and control.

Terms and Conditions: Section 214(a) of the Act gives ERA the authority to attach terms and conditions to any order granting an exemption. Based upon analysis of the information contained in the record of this proceeding, and pursuant to 10 CFR 503.38(e), this order is granted subject to the following terms and conditions.

1. Petroleum, as that term is defined in Section 103(a)(4) of the Act, shall not be used in boilers 1, 2 and 3 as part of the fuels mixture allowed by the exemptions granted herein, or for the purposes described in Section 103(a)(15)(A) of the Act.

2. The amount of natural gas used in each exempted boiler (boilers 1, 2 and 3) shall not exceed 25 percent of the total annual Btu heat input of the primary energy sources used in each unit.

3. All steam pipes at the GM Assembly Division must be insulated and all steam traps must be properly maintained.

4. In accordance with the reporting requirement in 10 CFR 503.38(g), GM will submit an annual report to the Economic Regulatory Admininstration, Case Control Unit (Fuel Use Act), Box 4629, Room 3214, 2000 M Street, NW., Washington, D.C. 20461, each year, within one month following each anniversary of the effective date of the exemptions granted herein, the following:

A certified statement of the percentage of natural gas used in each exempted unit (boilers 1, 2 and 3) by identifying the actual quantities of coal (in tons) and natural gas (in MCF) used during the reporting year, as well as the higher heating value (in Btu's per lb., per MCF) of those fuels. The following report format shall be used:

Boiler No.	Amount of fuel used		Btu equivalent		Percent of total annual Btu heat input	
	Coal (Tons)	Natural gas (MCF)	Coal (Per. lb.)	Natural gas (per MCF)	(Coal)	(Gas)
1.						
2.						
3.						

(Cite OFC Case Numbers 55119-9044-01-12, 55119-9044-02-12 and 55119-9044-03-12 on all reports)

The certification of fuel use must be executed by a duly authorized representative of GM.

The exemptions granted by this order shall not become effective earlier than November 24, 1980.

Pursuant to Section 702(c) of the Act, any person aggrieved by this order may at any time before November 24, 1980, petition for judicial review in accordance with the procedures outlined in 10 CFR 501.69.

Based upon information provided by GM, ERA has conducted an analysis which has been reviewed by DOE's Office of Environment, with consultation from the Office of the General Counsel, and DOE has concluded that the granting of these exemptions will not be a major Federal action significantly affecting the quality of the human environment within the meaning of the National Environmental Policy Act of 1969 (NEPA). Accordingly, neither an environmental impact statement nor an environmental assessment is required.

Issued in Washington, D.C., on September 18, 1980.

Robert L. Davies,

Assistant Administrator, Office of Fuels Conversion, Economic Regulatory Administration.

[FR Doc. 80-29606 Filed 9-23-80; 8:45 am]

BILLING CODE 6450-01-M

Proposed Remedial Order

Pursuant to 10 CFR 205.192(c), the Economic Regulatory Administration of the Department of Energy hereby gives Notice that the following Proposed Remedial Order has been issued. This Proposed Remedial Order alleges violations of applicable law as indicated.

A copy of the Proposed Remedial Order, with confidential information deleted, may be obtained from Thomas M. Holleran, Program Manager for Product Retailers, 2000 M Street, NW, Washington, DC 20416, phone 202/653-3569. On or before October 9, 1980, any aggrieved person may file a Notice of Objection with the Office of Hearings and Appeals, 2000 M Street, NW, Washington, DC 20461, in accordance with 10 CFR 205.193.

Issued in Washington, D.C., on the 18th of September 1980.

Robert D. Gerring,

Director, Enforcement Program Operations Division, Economic Regulatory Administration.

Proposed Remedial Orders—Northeast District, June 1980

Station	Address	Date	Violation Amount	Cents per gallon in violation
Shatz Bros. Marine Center, Inc	3148 Voorhies Ave., Brooklyn, NY 11235	6-12-80	$420.90	6.1

[FR Doc. 80-29607 Filed 9-23-80; 8:45 am]

BILLING CODE 6450-01-M

Federal Energy Regulatory Commission

[Docket No. CP70-258]

Cities Service Gas Co.; Petition To Amend

September 18, 1980.

Take notice that on August 27, 1980, Cities Service Gas Company (Petitioner), P.O. Box 25128, Oklahoma City, Oklahoma 73125, filed in Docket No. CP70-258 a petition to amend the order issued July 22, 1970,[1] as amended, in the instant docket pursuant to Section 7(c) of the Natural Gas Act so as to authorize an additional exchange point with Kansas-Nebraska Natural Gas Company, Inc. (K-N) in Sweetwater County, Wyoming, all as more fully set forth in the petition to amend which is on file with the Commission and open to public inspection.

Petitioner states that by order issued July 22, 1970, in Docket No. CP70-239, *et al.*, as amended, it was authorized to exchange up to 150,000 Mcf of gas per day with K-N pursuant to the terms of an exchange agreement dated May 27, 1970.

Petitioner states it is connected to and is purchasing gas from the Stock Pond W. I. Unit No. 1 well in Sweetwater County, Wyoming. K-N, it is asserted, also has an interest in the Stock Pond W. I. Unit No. 1 well. Petitioner proposes herein to receive K-N's share of the gas produced from that well in exchange for equivalent volumes of gas delivered to it by K-N at other exchange points. Petitioner further states that the parties amended their existing exchange agreement on August 14, 1980, to provide for the additional point of delivery by K-N to Petitioner.

Petitioner also requests authorization to make an annual filing of tariff revisions by January 31 of each year which would reflect any changes, additions, or deletions in delivery points between the parties.

Any person desiring to be heard or to make any protest with reference to said petition to amend should on or before October 9, 1980, file with the Federal Energy Regulatory Commission, Washington, D.C. 20426, a petition to intervene or a protest in accordance with the requirements of the Commission's rules of practice and procedure (18 CFR 1.8 or 1.10) and the Regulations under the Natural Gas Act (18 CFR 157.10). All protests filed with the Commission will be considered by it in determining the appropriate action to be taken but will not serve to make the protestants parties to the proceeding. Any person wishing to become a party to a proceeding or to participate as a party in any hearing therein must file a petition to intervene in accordance with the Commission's Rules.

Kenneth F. Plumb,

Secretary.

[FR Doc. 80-29590 Filed 9-23-80; 8:45 am]

BILLING CODE 6450-85-M

[1] This proceeding was commenced before the FPC. By joint Regulation of October 1, 1977 (10 CFR 1000.1), it was transferred to the Commission.

[Docket No. SA80-96]

Colorado Interstate Gas Co.; Application for Adjustment

September 18, 1980.

Take notice that on March 31, 1980, Colorado Interstate Gas Company (CIG) filed with the Federal Energy Regulatory Commission (Commission) an application for an adjustment under section 502(c) of the Natural Gas Policy Act of 1978 (NGPA) and § 1.41 of the Commission's rules of practice and procedure, wherein CIG sought relief from the requirements of Part 282 of the Commission's Regulations which implement the incremental pricing provisions of the NGPA.

CIG states that each of the transactions at issue involves a delivery of purchased natural gas at a delivery point near the wellhead by one pipeline ("reseller pipeline") to other pipelines ("purchasing pipeline"). Twenty-five percent of the volumes delivered are sold by the reseller pipeline to the purchasing pipelines at the reseller pipeline's cost of purchasing the volumes plus other related charges. The balance of volumes are transported for redelivery to the reseller pipeline. CIG states that in some cases it functions as the reseller pipeline and in others as one of the purchasing pipelines. CIG requests an adjustment to (1) exclude each such sale from the reseller pipeline's Incremental Pricing Surcharge provision, and (2) permit each purchasing pipeline to include its purchases under Subpart C of Part 282.

CIG asserts that this type of transaction, having the attributes of a sale by a producer rather than a pipeline, was not intended to be covered by Part 282. Finally, it asserts that the substantial administrative time and expense it will incur in accounting for these relatively small volume transactions will cause it special hardship, inequity, and an unfair distribution of burdens.

The procedures applicable to the conduct of this adjustment proceeding are found in § 1.41 of the Commission's rules of practice and procedure (44 FR 18961, March 30, 1979) as amended.

Any person desiring to participate in this adjustment proceeding shall file a petition to intervene in accordance with the provisions of § 1.41. All petitions to intervene must be filed on or before October 9, 1980.

Kenneth F. Plumb,

Secretary.

[FR Doc. 80-29591 Filed 9-23-80; 8:45 am]

BILLING CODE 6450-85-M

[Docket No. RA80-41]

Eagle's Chevron Service; Intent To Act

September 17, 1980.

On August 15, 1980, the presiding officer in this proceeding issued an order granting in part a request for interim relief by Eagle's Chevron Service (Eagle) in the form of an increased gasoline allocation for August 1980. On August 25, 1980, the Department of Energy (DOE) filed a request that the order granting interim relief be referred to the Commission for review, and on September 2, 1980, the presiding officer issued an order granting DOE's request.[1] Under our Rules of Practice and Procedure, § 1.28(d), unless we act upon a matter referred to us by a presiding officer within 15 days after the date of the referral the ruling of the presiding officer is deemed to be affirmed.

However, the DOE did not file a brief specifying its objections to the interim order and legal bases therefor in connection with its request for a referral. DOE indicated an intention to file such a brief upon issuance of an order of referral. The order of referral did not receive one in time to adequately consider it before the expiration of the 15 days referred to in § 1.28(d).

We establish a deadline of September 26, 1980, for the filing of a brief by DOE and a deadline of October 3, 1980, for any replies thereto and give notice of our intention to act upon the referral in the near future rather than allowing the interim order to be deemed approved.

By direction of the Commission.

Kenneth F. Plumb,

Secretary.

[FR Doc. 80-29592 Filed 9-23-80; 8:45 am]

BILLING CODE 6450-85-M

[1] On August 28, 1980, DOE implemented the increased allocation.

[Docket No. ER80-763]

Florida Power Corp.; Filing

September 18, 1980.

The filing Company submits the following:

Take notice that on September 11, 1980, Florida Power Corporation tendered for filing an Amendment to certain rate schedules to comply with Order No. 84 of the Federal Energy Regulatory Commission. The rate schedules affected by such amendment are contained in the Interchange Contract between Florida Power Corporation and Alabama Power Company , Georgia Power Company, Gulf Power Company, Mississippi Power Company, and Southern Company Services, Inc. The amendment is designed to specify the charges to be imposed by Florida Power Corporation in transactions which involve purchases by Florida Power of capacity and/or energy from third parties for delivery to the purchasing entity under the interchange contract. Florida Power requests that the notice requirement be waived and that the amendment be permitted to become effective on September 1, 1980, as required by FERC Order No. 84. Florida Power states that copies of the filing have been served on each of the parties to the interchange contract and the Florida Public Service Commission.

Any person desiring to be heard or to protest said application should file a petition to intervene or protest with the Federal Energy Regulatory Commission, 825 North Capitol Street, N.E., Washington, D.C. 20426, in accordance with §§ 1.8 and 1.10 of the Commission's rules of practice and procedure (18 CFR 1.8, 1.10). All such petitions or protests should be filed on or before October 10, 1980. Protests will be considered by the Commission in determining the appropriate action to be taken, but will not serve to make protestants parties to the proceeding. Any person wishing to become a party must file a petition to intervene. Copies of this application are on file with the Commission and are available for public inspection.

Kenneth F. Plumb,

Secretary.

[FR Doc. 80-29593 Filed 9-23-80; 8:45 am]

BILLING CODE 6450-85-M

[Project No. 3341]

Harrison Western Corp.; Application for Preliminary Permit

September 16, 1980.

Take notice that Harrison Western Corporation (Applicant) filed on August 19, 1980, an application for preliminary permit [pursuant to the Federal Power Act, 16 U.S.C. §§ 791(a)-825(r)] for proposed Project No. 3341 to be known as the Paonia Project located on Gunnison River near the Town of Somerset, Gunnison County, Colorado at the existing Paonia Dam owned by the United States Water and Power Resources Service (Township 13 South, Range 89 West N.M.P.M.). Correspondence with the Applicant should be directed to: Mr. Warren Harrison, Engineering manager, Harrison Western Corporation, 1208 Quail Street, Lakewood, Colorado 80215.

Project Description—The proposed project would utilize an existing

government dam and would consist of a powerhouse with four Ossberger turbines connected to four generators with a total rated capacity of 2,300 kW. A transmission line with a minimum length of 20,000 feet would be required. The project is estimated to be capable of generating up to 16,100,000 kWh annually, which would save the equivalent of 26,400 barrels of oil or 7,500 tons of coal.

Purpose of Project—Power generated by the project would be sold to either the Colorado-Ute Electric Cooperative, Rural Electric Associate or other local markets.

Proposed Scope and Cost of Studies under Permit—The work proposed under the preliminary permit would include economic analysis, preparation of preliminary engineering plans, and a study of environmental impacts. Based on results of these studies, Applicant would decide whether to proceed with more detailed studies and the preparation of an application for license to construct and operate the project. Applicant estimates that the cost of the work to be performed under the preliminary permit would be $60,000.

Purpose of Preliminary Permit—A preliminary permit does not authorize construction. A permit, if issued, gives the Permittee, during the term of the permit, the right of priority of application for license while the Permittee undertakes the necessary studies and examinations to determine the engineering, economic, and environmental feasibility of the proposed project, the market for power, and all other information necessary for inclusion in an application for a license.

Agency Comments—Federal, State, and local agencies that receive this notice through direct mailing from the Commission are invited to submit comments on the described application for preliminary permit. (A copy of the application may be obtained directly from the Applicant.) Comments should be confined to substantive issues relevant to the issuance of a permit and consistent with the purpose of a permit as described in this notice. No other formal request for comments will be made. If an agency does not file comments within the time set below, it will be presumed to have no comments.

Competing Applications—Anyone desiring to file a competing application must submit to the Commission, on or before *November 17, 1980,* either the competing application itself or a notice of intent to file a competing application. Submission of a timely notice of intent allows an interested person to file the competing application no later than *January 16, 1981.* A notice of intent must conform with the requirements of 18 CFR 4.33 (b) and (c), *(as amended,* 44 FR 61328, October 25, 1979). A competing application must conform with the requirements of 18 CFR 4.33 (a) and (d) *(as amended,* 44 FR 61328. October 25, 1979).

Comments, Protests, or Petitions to Intervene—Anyone desiring to be heard or to make any protest about this application should file a petition to intervene or a protest with the Federal Energy Regulatory Commission, in accordance with the requirements of the Commission's rules of practice and procedure, 18 CFR, § 1.8 or § 1.10 (1979). Comments not in the nature of a protest may also be submitted by conforming to the procedures specified in § 1.10 for protests. In determining the appropriate action to take, the Commission will consider all protests or other comments filed, but a person who merely files a protest or comments does not become a party to the proceeding. To become a party, or to participate in any hearing, a person must file a petition to intervene in accordance with the Commission's Rules. Any comments, protest, or petition to intervene must be filed on or before *November 17, 1980.* The Commission's address is: 825 North Capitol Street, NE., Washington, D.C. 20426. The application is on file with the Commission and is available for public inspection.

Kenneth F. Plumb

Secretary.

[FR Doc. 80-29594 Filed 9-23-80; 8:45 am]

BILLING CODE 6450-85-M

[Project No. 2890]

Kings River Conservation District; Fixing Place and Procedures for Public Sessions

September 10, 1980.

On November 28, 1978, Kings River Conservation District filed an application for a major license for the proposed Dinkey Creek Project No. 2890 to be located on Dinkey Creek in the Sierra National Forest, near the City of Fresno. The Dinkey Creek Project would be a hydroelectric facility with an installed capacity of 120 megawatts. The project would consist of a 380-foot high dam, two powerhouses, 4 diversion dams (or weirs), and a reservoir with a surface area of about 950 acres.

On August 29, 1980, The Commission's staff issued its final environmental impact statement on the proposed project. Before the Commission reviews the application to decide if the application should be granted or denied, or in the alternative to require that an evidentiary hearing be held to address disputed issues of fact, it has been determined that two public sessions should be held. These public sessions will allow, members of the general public an opportunity to present any information they may have which should be brought to the attention of the Commission. The two public sessions will be held in the Fresno City Council Chambers, City Hall, 2326 Fresno St., Fresno, California 93721, at 10:00 a.m. and 7:00 p.m. on October 8, 1980. Any members of the public, including parties to this proceeding, desiring to present their views or information on the proposed project may do so orally and in writing. All oral and written statements presented will be transcribed by a court reporter into the written record of the public session. These public sessions do not constitute evidentiary hearings which as of this date have not been ordered by the Commission.

To avoid confusion and to ensure that all persons wishing to present their positions can do so, the following procedures will be observed at the public meeting:

All persons desiring to be heard or wishing to submit written statements should, prior to the convening of the sessions listed above, fill out cards with their names, addresses, and the organization they represent, if any. The cards then should be given to the Commission staff members. Blank cards will be available at the entrance to the City Council Chambers.

When a person's name is called, the person should come forward and state his name, address, and organization, if any. If he has a written statement, he should give the reporter a copy. If an oral statement is to be given, the person should proceed to make the statement. In cases where a person submits a written statement and also wishes to make an oral statement, the oral remarks should only summarize briefly the highlights of the written statement, since all written statements will be copied into the record as though read. The statements made at the public session do not constitute evidence, and the persons giving statements will not be subject to cross-examination.

If a person desires to make a statement for the record but is unable to be present at the time their name is called, they may leave a copy of their statement with the reporter, and such statement will be copied into the record as though read or presented orally. If for any reason a person desiring to be heard is unable to attend the public session in person, he may submit a written statement by October 17, 1980, to the

Secretary, Federal Energy Regulatory Commission, 825 North Capitol Street, NE., Washington, D.C. 20426, and such statement will be made a part of the record of the public session.

Kenneth F. Plumb,

Secretary.

[FR Doc. 80-29596 Filed 9-23-80; 8:45 am]

BILLING CODE 6450-85-M

[Docket No. CP80-525]

Lone Star Gas Co., a Division of Enserch Corp.; Application

September 18, 1980.

Take notice that on August 28, 1980, Lone Star Gas Company, a Division of ENSERCH CORPORATION (Applicant), 301 South Harwood Street, Dallas, Texas 75201, filed in Docket No. CP80-525 an application pursuant to Section 7(c) of the Natural Gas Act and § 157.7(c) of the Regulations thereunder (18 CFR 157.7(c)) for a certificate of public convenience and necessity authorizing the construction, during the calendar year 1981, and operation of facilities to make miscellaneous rearrangements on its system, all as more fully set forth in the application which is on file with the Commission and open to public inspection.

The stated purpose of this budget-type application is to augment Applicant's ability to act with reasonable dispatch in making miscellaneous rearrangements which would not result in any material change in the transportation and sales service presently rendered by Applicant.

Applicant states that the total cost of the proposed facilities would not exceed $300,000. Applicant further states that the cost of the proposed facilities would be financed from funds on hand.

Any person desiring to be heard or to make any protest with reference to said application should on or before October 9, 1980, file with the Federal Energy Regulatory Commission, Washington, D.C. 20426, a petition to intervene or a protest in accordance with the requirements of the Commission's rules of practice and procedure (18 CFR 1.8 or 1.10) and the Regulations under the Natural Gas Act (18 CFR 157.10). All protests filed with the Commission will be considered by it in determining the appropriate action to be taken but will not serve to make the protestants parties to the proceeding. Any person wishing to become a party to a proceeding or to participate as a party in any hearing therein must file a petition to intervene in accordance with the Commission's Rules.

Take further notice that, pursuant to the authority contained in and subject to jurisdiction conferred upon the Federal Energy Regulatory Commission by Sections 7 and 15 of the Natural Gas Act and the Commission's rules of practice and procedure, a hearing will be held without further notice before the Commission or its designee on this application if no petition to intervene is filed within the time required herein, if the Commission on its own review of the matter finds that a grant of the certificate is required by the public convenience and necessity. If a petition for leave to intervene is timely filed, or if the Commission on its own motion believes that a formal hearing is required, further notice of such hearing will be duly given.

Under the procedure herein provided for, unless otherwise advised, it will be unnecessary for Applicant to appear or be represented at the hearing.

Kenneth F. Plumb,

Secretary.

[FR Doc. 80-29597 Filed 9-23-80; 8:45 am]

BILLING CODE 6450-85-M

[Docket No. CP80-523]

Lone Star Gas Co., a Division of Enserch Corp.; Application

September 18, 1980.

Take notice that on August 28, 1980, Lone Star Gas Company, a Division of Enserch Corporation (Applicant), 301 South Harwood Street, Dallas, Texas 75201, filed in Docket No. CP80-523 an application pursuant to Section 7(b) of the Natural Gas Act and § 157.7(e) of the Regulations thereunder (18 CFR 157.7(e)) for permission and approval to abandon, during the calendar year 1981, direct sales service and facilities no longer required for deliveries of natural gas to Applicant's customers, all as more fully set forth in the application which is on file with the Commission and open to public inspection.

The stated purpose of this budget-type application is to augment Applicant's ability to act with reasonable dispatch in abandoning service and removing direct sales measuring, regulating, and related facilities. Applicant states that it would abandon service and facilities only when deliveries to any one direct sales customer would not have exceeded 100,000 Mcf of natural gas during the last year of service.

The application further states that Applicant would not abandon any service unless it would have received a written request or written permission from the customer to terminate service. In the event such request or permission could not be obtained, a statement certifying that the customer has no further need for service would be filed with the Commission.

Any person desiring to be heard or to make any protest with reference to said application should on or before October 9, 1980, file with the Federal Energy Regulatory Commission, Washington, D.C. 20426, a petition to intervene or a protest in accordance with the requirements of the Commission's rules of practice and procedure (18 CFR 1.8 or 1.10) and the Regulations under the Natural Gas Act (18 CFR 157.10). All protests filed with the Commission will be considered by it in determining the appropriate action to be taken but will not serve to make the protestants parties to the proceeding. Any person wishing to become a party to a proceeding or to participate as a party in any hearing therein must file a petition to intervene in accordance with the Commission's Rules.

Take further notice that, pursuant to the authority contained in and subject to the jurisdiction conferred upon the Federal Energy Regulatory Commission by Sections 7 and 15 of the Natural Gas Act and the Commission's rules of practice and procedure, a hearing will be held without further notice before the Commission or its designee on this application if no petition to intervene is filed within the time required herein, if the Commission on its own review of the matter finds that permission and approval for the proposed abandonment are required by the public convenience and necessity. If a petition for leave to interevene is timely filed, or if the Commission on its own motion believes that a formal hearing is required, further notice of such hearing will be duly given.

Under the procedure herein provided for, unless otherwise advised, it will be unnecessary for Applicant to appear or be represented at the hearing.

Kenneth F. Plumb,

Secretary.

[FR Doc. 80-29598 Filed 9-23-80; 8:45 am]

BILLING CODE 6450-85-M

[Docket No. EL80-19 and Docket No. EL80-24]

Massachusetts Municipal Wholesale Electric Co., et al.; Consolidating Proceedings and Granting Interventions

September 10, 1980.

On March 4, 1980, the Massachusetts Municipal Wholesale Electric Company (MMWEC) filed in FERC Docket No. EL80-19 a complaint and motion for partial summary judgment against the

Power Authority of the State of New York (Power Authority or PASNY). On March 27, 1980, the Connecticut Municipal Electric Energy Cooperative (CMEEC) filed in FERC Docket No. EL80–24 a similar complaint and motion against PASNY. In their complaints MMWEC and CMEEC request that the Commission review PASNY's recent decision to allocate 145 megawatts of firm out-of-state preference power from the Niagara Project to Allegheny Electric Cooperative (Allegheny), Vermont Public Service Board (Vermont), and Pennsylvania and American Municipal Power-Ohio, Inc. (AMP-Ohio), and to exclude CMEEC, MMWEC, and the Borough of Lansdale, Pennsylvania (Lansdale from that allocation.

Consolidation of Proceedings

MMWEC filed a motion in both EL80–19 and EL80–24 requesting consolidation of these two proceedings. The reason given by MMWEC for consolidation is that the complaints in both EL80–19 and EL80–24 seek review and modification by the Commission of the same allocation of Niagara project power by PASNY. MMWEC further stated that CMEEC supports the consolidation sought in MMWEC's motion. The Power Authority and the Municipal Electric Utilities Association of New York State (MEUA) joined MMWEC's motion to consolidate, and no petitioner opposed the motion.

Consolidation of EL80–19 and EL80–24 would ease the procedural burden on the parties and the Commission from conducting two separate proceedings on the same issues. Therefore, consolidation of EL80–19 and EL80–24 appears to be in the public interest, and is effective the date of issuance of this notice.

Petitions to Intervene

Petitions to intervene in the now consolidated proceedings in EL80–19 and EL80–24 were filed by Allegheny, the City of Cleveland, Ohio (Cleveland), Consolidated Edison Company of New York, Inc. (Con Ed), Lansdale, MEUA, New York State Electric and Gas Corporation (NYSEG), the New York State Energy Office (NYSEO), and Vermont.[1] Good cause exists for granting each of these petitions. The interests of the petitioners in these proceedings as stated in their petitions are outlined below. Substantive issues raised by the petitions will be addressed at a later date.

[1] Consolidation of EL80–19 and EL80–24 automatically makes CMEEC and MMWEC parties to these proceedings. There is therefore no need to address their petitions to intervene in this notice.

Allegheny states in its petition that it is an organization of rural electric cooperatives in Pennsylvania which receives 86 megawatts of firm power and 26 megawatts of peaking power as a result of PASNY's recent allocation of out-of-state preference power from the Niagara Project. The petition states that Allegheny is entitled to all of the Niagara power and associated energy which it receives, if not to an even greater amount of that power and energy.

Cleveland receives 19 megawatts of firm power and 4 megawatts of peaking power purchased from PASNY by AMP-Ohio. Cleveland's interest in these proceedings is to protect the allocation of Niagara power which it receives from AMP-Ohio.

Con Ed states that it is a New York corporation serving customers in New York City and Westchester County. Con Ed's position is that the allocation of Niagara power to out-of-state customers should be reduced rather than increased, in order to make more power available to domestic and rural consumers within New York State, including those served by investor-owned electric utilities.

Lansdale owns and operates an electric distribution system which has applied to PASNY for an allocation of out-of-state preference power from the Niagara Project. Since resolution of these proceedings may involve an interpretation of the preference provisions of the Niagara Redevelopment Act, Lansdale states that it has an interest in the proceedings.

MEUA's petition to intervene states that MEUA is an organization of 47 municipal and rural electric cooperatives in New York State whose electrical requirements are served from PASNY's Niagara and St. Lawrence Projects. MEUA states that its members are entitled to at least 40 percent of Niagara project power, but that they are currently receiving less than that amount. MEUA further states that Commission action on the complaints in these proceedings could affect present and future allocations of Niagara project power to its members, and that its interests are not adequately represented by existing parties to the proceedings.

NYSEG's petition states that NYSEG is a corporation which purchases power from the Power Authority under Niagara Contract NS–11. NYSEG states that the relief requested by complainants may result in a reformation of NS–11 and a reduction in the amount of Niagara power sold to NYSEG.

The New York State Energy Office is charged with the duty to maintain liaison with and represent the State before appropriate agencies of the federal government in all energy matters. The NYSEO requests intervention in order to effectuate State energy policies and to fulfill its statutory mandate.

Vermont filed a notice of intervention in accordance with the provisions of section 1.8(a)(1) of the Commission's Rules of Practice and Procedure and is therefore an intervenor in this proceeding.

Pursuant to § 375.302 of the Commission's regulations, 45 F.R. 21216 (1980), *amending* 18 C.F.R. 3.5(a)(1979), Allegheny, Cleveland, Con Ed, Lansdale, MEUA, NYSEG, and NYSEO are permitted to intervene in this proceeding subject to the Commission's Rules and Regulations under the Federal Power Act, 16 U.S.C §§ 791(a)–825(r). Participation of the intervenors shall be limited to matters affecting asserted rights and interest specifically set forth in their petitions to intervene. The admission of the intervenors shall not be construed as recognition by the Commission that they might be aggrieved by any order entered in this proceeding.

Kenneth F. Plumb,

Secretary.

[FR Doc. 80–29599 Filed 9–23–80; 8:45 am]

BILLING CODE 6450–85–M

[Docket No. SA80–124]

McCulloch Interstate Gas Corp.; Application for Adjustment and Request for Interim Relief

September 18, 1980.

Take notice that on May 15, 1980, McCulloch Interstate Gas Corporation (Applicant), 10880 Wilshire Boulevard, Suite 1600, Los Angeles, California 90024, filed with the Federal Energy Regulatory Commission (Commission) an application for an adjustment pursuant to section 502(c) of the Natural Gas Policy Act of 1978 (NGPA), and § 1.41 of the Commission's Rules of Practice and Procedures in the form of an exemption from the reporting and filing requirements of Part 282 of the Commission's regulations, as promulgated by Commission Order No. 49 and No. 49–A, issued September 28, 1979, and December 27, 1979, respectively, in Docket No. RM79–14. In addition, Applicant seeks interim relief under § 1.41(m) of the Commission's Rules pending the outcome of the Commission's determination on its application for adjustment.

Applicant asserts that Order No. 49–A recognizes that relief pursuant to section 502(c) from the Part 282 filing and

accounting procedures is appropriate for three types of small companies including a small company located near the producer-suppliers, performing only a gathering service and selling all of its gathered gas to one large interstate pipeline (Order No. 49–A at 35).

Applicant states that an adjustment as requested is necessary in order to relieve the company of a special hardship, inequity, or unfair distribution of burdens. As stated in its application, Applicant believes its situation is within the comtemplation of the Order No. 49–A exemptions because it meets the foregoing criteria. In addition, Applicant states that compliance with the filing requirements of Part 282 of the Commission's regulations would result in an unfair disribution of economic and administrative burdens and as well as irreparable and irreversible injury to Applicant.

The procedures applicable to the conduct of this adjustment proceeding are found in § 1.41 of the Commission's Rules of Practice and Procedure (44 FR 19861, March 30, 1979), promulgated by Order No. 24, issued March 22, 1979, as amended by Order No. 24–A, issued November 27, 1979, and Order No 24–B, issued March 24, 1980.

Any person desiring to participate in this adjustment proceeding shall file a petition to intervene in accordance with the provisions of 18 CFR 1.41. All petitions to intervene must be filed by October 9, 1980.

Kenneth F. Plumb,

Secretary.

[FR Doc. 80–29600 Filed 9–23–80; 8:45 am]

BILLING CODE 6450–85–M

[Docket No. CP80–176]

Michigan Wisconsin Pipe Line Co.; Order Denying Rehearing in Part and Establishing Procedures

Issued: September 17, 1980.

I. Background

On August 4, 1980, Michigan Wisconsin Pipe Line Company (Mich-Wisc) [1] filed a petition for rehearing of a July 3, 1980, order granting to Mich-Wisc a certificate of public convenience and necessity pursuant to Section 7(c) of the Natural Gas Act.[2] That certificate authorized the construction and operation of an interconnection between Mich-Wisc and a pipeline operated by Mississippi Power and Light Company (MP&L) and the delivery of natural gas to MP&L to displace fuel oil in generating electricity. The certificate included the standard conditions prescribed by the Commission's fuel oil displacement regulations, Order No. 30, 18 CFR Part 284, Subpart F.

Mich-Wisc did not accept the certificate and now seeks rehearing of these certificate conditions, alleging that the Commission erroneously limited the certificate term so as to expire on August 31, 1980. Mich-Wisc also seeks rehearing of Ordering Paragraph (E) of the July 3, 1980, order, which requires all revenues in excess of out-of-pocket costs which are not otherwise recovered from Mich-Wisc's existing jurisdictional customers to be credited to Account No. 191. In place of this condition, Mich-Wisc suggests that it be allowed to retain all revenues from the sale in excess of expenses, even if such revenues result in Mich-Wisc earning more than its just and reasonable rate of return.

II. Discussion

The Mich-Wisc petition for rehearing requests that the proposed transaction be considered outside the context of the Commission's fuel oil displacement program. Instead, Mich-Wisc seeks an open-ended arrangement to alleviate substantial take-or-pay obligations which Mich-Wisc alleges has an inhibiting effect upon its acquisition of long-term supplies. Should Mich-Wisc wish to depart form the findings which lead the Commission to establish and extend its fuel oil displacement program, Mich-Wisc would have to demonstrate *de novo* that its proposed sale to MP&L satisfies the public convenience and necessity standard prescribed by Section 7(c) of the Natural Gas Act. Subsequent to the July 3, 1980 certificate order, the Commission has revisited the factors supporting the fuel oil displacement program, including both gas supply and oil imports. The Commission concluded after carefully reviewing these factors in Order No. 30–D, issued August 15, 1980, that an extension of the program until May 31, 1981 was justified. However, we cautioned parties that 'the Commission wishes to emphasize that any further extension of the program would be well beyond the contemplation of this short-term structure." (mimeo at 17). Because Mich-Wisc now proposes a case-specific structure for a open-ended transaction, the Commission will afford Mich-Wisc the opportunity to demonstrate that such a long-term arrangement is in the public interest. In any event, for the reasons discussed in Order No. 30–D, the Commission is prepared to reconsider upon the completion of the hearing established herein, whether the certificate issued in this docket should be extended to May 31, 1981 or beyond that date.[3]

With respect to the rate treatment, Mich-Wisc's now suggests that either (1) all facilities and operational costs of its sale to MP&L be considered in the same manner as jurisdictional sales and costs or (2) Mich-Wisc bear all facilities and operational costs of its sale to MP&L and also retain 100% of the revenues from the sale. In support of this approach, Mich-Wisc relies upon a recent District of Columbia Circuit opinion in *Panhandle Eastern Pipe Line Co.* v. *FERC,* 613 F.2d 1120 (1979). The *Panhandle* case did not involve the tracing of costs associated with a short-term sale off-system. In fact, the *Panhandle* court specifically reserved the question of the § 284.205 Account No. 191 crediting requirement. (613 F.2d at 1136 fn. 86). In addition, the *Panhandle* case is still before United States Supreme Court *sub judice.*

In our view, serious factual questions surround the determination of whether either of Mich-Wisc's proposed rate treatments is consistent with the public convenience and necessity. For example, Mich-Wisc fails to describe which costs it proposes to assign to the sale. Because the record raises the possibility that Mich-Wisc may sell this gas to MP&L at a price below the cost of a significant portion of its system supply gas purchases, the Commission believes that an evidentiary hearing is necessary to determine whether the Mich-Wisc rate proposals would require Mich-Wisc's existing customers to subsidize the sale or whether the Mich-Wisc rate proposals are otherwise inconsistent with the cost responsibility attributable to the sale. As we noted in Order No. 30–D, "should the transaction be priced in terms which effectively require subsidization by system supply customers (who may also be displacing fuel oil) a strong showing would have to be made to establish how such circumstances would be consistent with the public interest." [4]

Consistent with the provisions of § 284.208(d), the Commission finds that a formal evidentiary hearing should be held to determine:

---

[1] Mich-Wisc, a Delaware Corporation having its principal place of business in Detroit, Michigan, is a "natural-gas company" within the meaning of the Natural Gas Act as heretofore found by order of issue November 30, 1946 in Docket No. G–669 (5 FPC 953).

[2] Rehearing was granted for the purpose of further consideration on September 2, 1980.

[3] The primary term of the Mich-Wisc-MP&L contract extends through December 31, 1980 and extends thereafter until terminated by either party on 30 days notice. However, the July 3, 1980 certificate was specifically limited to the period ending August 31, 1980.

[4] Mimeo at 16.

(1) What certificate term would be consistent with the public convenience and necessity.

(2) During the proposed transaction, to what extent will Mich-Wisc be acquiring gas for system supply at a price in excess of the proposed sales price.

(3) For each purchase of gas priced above the proposed sales price, the extent to which Mich-Wisc is likely to incur minimum bill obligations or prepayments during each year of the proposed transaction.

(4) The actual outstanding prepayment balances in Account No. 165 by producer, price category, and location relative to Mich-Wisc's system.

(5) Whether any other natural gas-company seeks to purchase for system supply the subject natural gas.

(6) The disposition of the natural gas in the event that the natural gas is not sold by Mich-Wisc to MP&L.

(7) The effect of the sale to MP&L upon Mich-Wisc's

(a) Weighted average unit purchased gas cost, and

(b) total jurisdictional cost of service.

(8) The actual impact of the sale to MP&L upon Mich-Wisc's other customers, if either:

(a) The rate condition imposed by the original order is retained, or

(b) The rate condition proposed in the rehearing petition are adopted.

(9) The effect of the sale to MP&L upon Mich-Wisc's projected new reserve acquisitions.

The Commission is aware of Mich-Wisc's request for expedition, and therefore, instructs the Presiding Administrative Law Judge to expedite the progress of this proceeding.

The Commission finds

It is necessary and appropriate in carrying out the provisions of the Natural Gas Act that the application for a permanent certificate of public convenience and necessity in Docket No. CP80-176 be set for evidentiary hearing in accordance with the procedure hereinafter detailed.

The Commission orders

(A) Pursuant to the authority of the Natural Gas Act, particularly Sections 7 and 15 thereof, the Commission's Rules of Practice and Procedure (18 CFR, Part I), and the regulations under the Natural Gas Act (18 CFR, Chapter I, Subchapter (a)), a hearing shall be held on the subject application, in the manner provided for in the instant order.

(B) A Presiding Administrative Law Judge designated by the Chief Administrative Law Judge shall preside at a prehearing conference and subsequent hearing in this proceeding, with authority to establish and change all procedural dates and to rule on all motions as provided by the Rules of Practice and Procedure.

(C) The Presiding Judge shall convene a prehearing conference on October 7, 1980 at 10:00 a.m. in a hearing room of the Federal Energy Regulatory Commission, 825 North Capitol St. NE., Washington, D.C. 20426.

(D) In all other requests, Mich-Wisc's petition for rehearing is denied.

By the Commission.

Kenneth F. Plumb,

Secretary.

[FR Doc. 80-29601 Filed 9-23-80; 8:45 am]

BILLING CODE 6450-85-M

[Docket No. ER-80-760]

Southern California Edison Co.; Filing of Rate Schedule Change and Request for Waiver of Prior Notice Requirements

September 18, 1980.

The filing Company submits the following:

Take notice that on September 11, 1980, Southern California Edison Company ("Edison") tendered for filing as a rate schedule change, a letter agreement dated August 21, 1980, with the City of Anaheim ("Anaheim").

Under the terms of the Agreement, Edison will provide to Anaheim interruptible transmission service for energy purchased by Anaheim from Western Area Power Administration ("Western") under the same terms and conditions Edison currently provides interruptible transmission service to Anaheim for energy purchased from Nevada Power Company pursuant to Rate Schedule FERC Nos. 83 or 99, as appropriate, modified as necessary to provide for multiple scheduling and dispatching contacts.

Edison has requested that the prior notice requirement be waived and that the Agreement be made effective as a change of rate schedule as of August 1, 1980, to enable Anaheim to take advantage of short term economy energy purchases from Western.

Copies of this filing were served upon the Public Utilities Commission of the State of California and the City of Anaheim.

Any person desiring to be heard or to protest this application should file a petition to intervene or protest with the Federal Energy Regulatory Commission, 825 North Capitol Street, N.E., Washington, D.C., 20426, in accordance with §§ 1.8 and 1.10 of the Commission's rules of practice and procedure (18 CFR 1.8, 1.10). All such petitions or protests should be filed on or before October 10, 1980. Protests will be considered by the Commission in determining the appropriate action to be taken, but will not serve to make protestants parties to the proceeding. Any person wishing to become a party must file a petition to intervene. Copies of this application are on file with the Commission and are available for public inspection.

Kenneth F. Plumb,

Secretary.

[FR Doc. 80-29602 Filed 9-23-80; 8:45 am]

BILLING CODE 6450-85-M

[Docket No. CP77-426]

Transcontinental Gas Pipe Line Corp.; Petition To Amend

September 18, 1980.

Take notice that on August 29, 1980, Transcontinental Gas Pipe Line Corporation (Petitioner), P.O. Box 1396, Houston, Texas 77001, filed in Docket No. CP77-426 a petition to amend the order issued August 29, 1977, as amended November 15, 1979, in the instant docket pursuant to Section 7(c) of the Natural Gas Act and § 2.79 of the Commission's General Policy and Interpretations (18 CFR 2.79) so as to authorize a two-year extension of a natural gas transportation service provided for Owens-Corning Fiberglas Corporation (Owens-Corning), all as more fully set forth in the petition to amend which is on file with the Commission and open to public inspection.

Petitioner states that it was authorized to transport up to 1,200 Mcf of natural gas per day for use at Owens-Corning's Anderson, South Carolina, plant. It is stated that Owens-Corning purchases the gas from Kilroy Properties Incorporated (Kilroy) and Dawson Exploration, Inc. (Dawson) from production in Jefferson Davis Parish, Louisiana. Moreover, it is asserted that Texas Gas Transmission Corporation receives the gas in the field and delivers it to Petitioner for ultimate delivery to the Anderson plant.

Petitioner requests authority to continue the transportation service for Owens-Corning for an additional two-year term after the expiration date of August 28, 1980. It is stated that Dawson and Kilroy have assured Owens-Corning of continued gas supply.

Petitioner proposes to charge an initial rate of 23.97 cents per dekatherm (dt) equivalent delivered including 0.47 cent per dt equivalent for GRI General R. & D. Funding Unit and to retain 3.8 percent of the quantities received for transportation as make-up for compression fuel and line loss.

Any person desiring to be heard or to make any protest with reference to said petition to amend should on or before October 9, 1980, file with the Federal Energy Regulatory Commission, Washington, D.C. 20426, a petition to intervene or a protest in accordance with the requirements of the Commission's Rules of Practice and Procedure (18 CFR 1.8 or 1.10) and the Regulations under the Natural Gas Act (18 CFR 157.10). All protests filed with the Commission will be considered by it in determing the appropriate action to be taken but will not serve to make the protestants parties to the proceeding. Any person wishing to become a party to a proceeding or to participate as a party in any hearing therein must file a petition to intervene in accordance with the Commission's Rules.

Kenneth F. Plumb,

Secretary.

[FR Doc. 80-29603 Filed 9-23-80; 8:45 am]

BILLING CODE 6450-85-M

ENVIRONMENTAL PROTECTION AGENCY

[FRL 1613-3]

Agency Comments on Environmental Impact Statements and Other Actions Impacting the Environment

Pursuant to the requirements of the section 102(2)(C) of the National Environmental Policy Act of 1969, and section 309 of the Clean Air Act, as amended, the Environmental Protection Agency (EPA) has reviewed and commented in writing on Federal agency actions impacting the environment contained in the following appendices during the period of April 1, 1980 and April 30, 1980.

Appendix I contains a listing of draft environmental impact statements reviewed and commented upon in writing during this review period. The list includes the Federal agency responsible for the statement, the number and title of the statement, the classification of the nature of EPA's comments as defined in Appendix II, and the EPA source for copies of the comments as set forth in Appendix VI.

Appendix II contains the definitions of the classifications of EPA's comments on the draft environmental impact statements as set forth in Appendix I.

Appendix III contains a listing of final environmental impact statements reviewed and commented upon in writing during this review period. The listing includes the Federal agency responsible for the statement, the number and title of the statement, a summary of the nature of EPA's comments and the EPA source for copies of the comments as set forth in Appendix VI.

Appendix IV contains a listing of final environmental impact statements reviewed but not commented upon by EPA during this review period. The listing includes the Federal agency responsible for the statement, the number and title of the statement, and the EPA source of review as set forth in Appendix VI.

Appendix V contains a listing of propsed Federal agency regulations, legislation proposed by Federal agencies, and any other proposed actions reviewed and commented upon in writing pursuant to section 309(a) of the Clean Air Act, as amended, during the referenced reviewing period. This listing includes the Federal agency responsible for the proposed action, the title of the action, a summary of the nature of EPA's comments, and the source for copies of the comments as set forth in the Appendix VI.

Appendix VI contains a listing of the names and addresses of the sources of EPA reviews and comments listing in Appendices I, III, IV, and V.

Note that this is a 1980 report; the backlog of reports should be eliminated over the next two months.

Copies of the EPA Manual setting forth the policies and procedures for EPA's review of agency actions may be obtained by writing the Public Information Reference Unit, Environmental Protection Agency, Room 2922, Waterside Mall SW., Washington, D.C. 20460, telephone 202/755-2808.

Copies of the draft and final environmental impact statements referenced herein are available from the originating Federal department or agency.

Dated: September 16, 1980.

William N. Hedeman, Jr.,

Director, Office of Environmental Review.

Appendix I.—*Draft Environmental Impact Statements for Which Comments Were Issued Between Apr. 1 and Apr. 30, 1980*

Identifying No.	Title	General nature of comments	Source for copies of comments
	Corps of Engineers		
DS-COE-B36015-OO	Dickey-Lincoln School Lakes, Maine, Vermont, New Hampshire, and Quebec, Canada	3	B
D-COE-E36062-GA	Savannah River Basin, Oates Creek Flood Damage Reduction, Richmond County, Georgia	LO2	E
D-COE-F07009-IN	Rockport Generating Station, Permit, Spencer County, Indiana	ER2	F
D-COE-F36065-MI	Shoreline Flood Protection, Wayne and McComb Counties, Michigan	LO2	F
D-COE-F39012-OH	Scioto River Flood Control, Water Resources Development, North Chillicothe, Ohio	ER2	F
D-COE-G36083-OK	Haikey Creek Flood Protection Project, Tulsa County, Oklahoma	LO1	G
D-COE-G39008-LA	Below Red River, Flood Control, Avoyelles Parish, Louisiana	ER1	G
	Department of Agriculture		
D-AFS-L64009-AK	Main Bay Hatchery, Chugach National Forest, Prince William Sound Area, Alaska	LO2	K
D-SCS-C38003-NY	Hogansburg Agricultural Land Drainage, Franklin and St. Lawrence Counties,	LO2	C
D-SCS-G36081-TX	Attoyac Bayou Watershed, Flood Prevention, Nacagdoches, Rusk, Shelby, and San Augustine Counties, Texas.	ER2	G
	Department of Commerce		
D-EDA-G28005-AR	Hope City Regional Water System, Hempstead County, Arkansas	LO1	G
RD-NOA-A91049-OO	Proposed Regulations and Conditions for the Issuance of a General Permit Governing the Taking of Marine Mammals Associated With Tuna Purse Seining Operations for the Remainder of 1980 Through 1981.	LO1	A
D-NOA-K64005-HI	Designation of Critical Habitat for Hawaiian Monk Seal, Northwestern Hawaiian Islands, Hawaii	LO1	J
	Department of Defense		
D-USA-C11001-NY	Fort Drum, Current Mission, Watertown, Jefferson County, New York	ER2	C

Appendix I.—*Draft Environmental Impact Statements for Which Comments Were Issued Between Apr. 1 and Apr. 30, 1980*—Continued

Identifying No.	Title	General nature of comments	Source for copies of comments
	Department of Energy		
RD-DOE-A09073-OO	Energy Performance Standards for New Buildings (DOE-EIS-0061-D)	ER2	A
	Department of the Interior		
RD-BLM-A01061-OO	43 CFR 3809, Surface Management of Public Lands Under the U.S. Mining Laws, AK, AZ, AR, CA, CO, FL, ID, LA, MS, MT, NE, NV, NM, ND, OR, SD, UT, WA, and WY.	LO1	A
D-BLM-K65034-OO	Cowhead-Massacre Range Management Planning Unit, Lassen and Modoc Counties, California, and Washoe County, Nevada.	LO2	J
D-BLM-L65055-ID	Bannock Oneidda Grazing Management Plan, Burley District, Cassia, Oneida, Power, and Bannock Counties, Idaho.	LO1	K
D-HCR-A30089-OO	Alternative Policies for Protecting Barrier Islands Along the Atlantic and Gulf Coasts of the United States.	LO1	A
D-HCR-L61136-AK	Protection of Eleven Alaskan Rivers, Protection of River Corridors, Alaska	LO1	K
D-SFW-K64004-OO	Sheldon National Wildlife Refuge Renewable Natural Resources Management Plan, Lake County, Oregon and Washoe and Humboldt Counties, Nevada.	LO2	J
D-SFW-L64010-AK	Alaska Peninsula National Wildlife Refuge, Alaska	LO1	K
	Department of Transportation		
DS-FHW-A40525-OR	I-505 Alternative, Northwest Nicolai Street to I-405, Multnomah County, Oregon	3	K
D-FHW-E40189-FL	U.S. 19/FL-55, FL-694 to Pinellas, Pinellas County, Florida	LO1	E
D-FHW-L40091-OR	Northeast 177th Avenue, Northeast 181st Avenue Columbia River Highway, I-80N Improvement, Multnomah County, Oregon.	LO2	K
LD-UMT-A54032-OO	Proposed Legislative Action: "Public Transportation Amendments of 1980 (Transportation Efficiency Act of 1980)".	LO2	A
D-UMT-E54002-GA	North Line, Lindbergh/Piedmont Segment, Atlanta, Fulton County, Georgia	LO2	E
	Federal Energy Regulatory Commission		
DS-FRC-E03001-OO	Construction and Conversion Project, Zachary-Fort Lauderdale Pipeline, Louisiana, Alabama, and Florida (see FPC-E03001).	LO1	E
	Department of Housing and Urban Development		
D-HUD-B89014-MA	Copley Place Development Project, Boston, Suffolk County, Massachusetts IUDAG) (HUD-(CDBG)-ROI-EIS-80-D).	LO2	B
D-HUD-D85021-MD	Youngstown Planned Development, Washington County, Maryland	ER2	D
D-HUD-D85022-MD	Carrolltowne Planned Development, Carroll County, Maryland	ER2	D
DS-HUD-F85027-MN	Jonathan New Community, Chaska, Carver County, Minnesota	ER2	F
D-HUD-F85052-IL	Woodlake Trails, Village of Hanover Park, Du Page County, Illinois	ER2	F
D-HUD-G85147-TX	Southwyck Subdivision, Mortgage Loan, Pearland, Brazoria County, Texas	ER2	G
DS-HUD-J85030-CO	The Woodlands Housing Development, Fort Collins, Larimer County, Colorado	ER2	I
DS-HUD-J85031-CO	Wagon Wheel Housing Development, Fort Collins, Larimer County, Colorado	ER2	I
D-HUD-J85032-CO	Golden Meadows Housing Development, Fort Collins, Larimer County, Colorado	ER2	I
D-HUD-J85033-CO	Rockrimmon Lake Area, Colorado Springs, El Paso County, Colorado	ER2	I
D-HUD-J85034-CO	Four Seasons Planned Unit Development, Fort Collins, Larimer County, Colorado	ER2	I
	Interstate Commerce Commission		
D-ICC-E53005-MS	Golden Triangle Railroad Company, Trackage Rights, Lowndes County, Mississippi	LO2	E
	Veterans Administration		
DR-VAD-K86008-HI	Master Plan for National Memorial Cemetery of Pacific, Honolulu, Hawaii	LO1	J

Appendix II.—Definitions of Codes for the General Nature of EPA Comments

Environmental Impact of the Action

LO—Lack of Objection

EPA has no objections to the proposed action as described in the draft impact statement; or suggests only minor changes in the proposed action.

ER—Environmental Reservations

EPA has reservations concerning the environmental effects of certain aspects of the proposed action. EPA believes that further study of suggested alternatives or modifications is required and has asked the originating Federal agency to reassess these impacts.

EU—Environmentally Unsatisfactory

EPA Believes that the proposed action is unsatisfactory because of its potentially harmful effect on the environment. Furthermore, the Agency believes that the potential safeguards which might be utilized may not adequately protect the environment from hazards arising from this action. The Agency recommends that alternatives to the action be analyzed further (including the possibility of no action at all).

Adequacy of the Impact Statement

Category 1—Adequate

The draft impact statement adequately sets forth the environmental impact of the proposed project or action as well as alternatives reasonably available to the project or action.

Category 2—Insufficient Information

EPA believes that the draft impact statement does not contain sufficient information to assess fully the environmental impact of the proposed project or action. However, from the information submitted, the Agency is able to make a preliminary determination of the impact on the environment. EPA has requested that the originator provide the information that was not included in the draft statement.

Category 3—Inadequate

EPA believes that the draft impact statement does not adequately assess the environmental impact of the proposed project or action, or that the statement inadequately analyzes reasonable available alternatives. The Agency has requested more information and analysis concerning the potential environmental hazards and has asked that substantial revision be made to the impact statement.

Appendix III.—*Final Environmental Impact Statements for Which Comments Were Issued Between Apr. 1, and Apr. 30, 1980*

Identifying No.	Title	General nature of comments	Source for copies of comments
		Corps of Engineers	
F-COE-C36026-NY	Local Flood Control Protection, Cayuga Creek, Erie County, New York.	EPA's concerns were adequately addressed in the final EIS.	C
F-COE-E36038-TN	Whiteoak Creek Flood Control, Morgan County, Tennessee.	EPA's concerns were adequately addressed in the final EIS.	E
F-COE-F07008-MI	Belle River Power Plant, St. Clair River, St. Clair County, Michigan.	EPA's concerns were adequately addressed in the final EIS. However, EPA suggests that energy audits be included in the conversation program..	F
F-COE-F35021-MI	Frankfort Harbor Dredging, Confined Disposal, Structure Repairs and Operations, Benzie County, Michigan.	EPA's concerns were adequately addressed in the final EIS.	F
		Department of Agriculture	
F-AFS-D40060-VA	Mount Rogers National Recreation Area, Scenic Highway, Carroll, Grayson, Smyth, Washington, and Wythe Counties, Virginia.	EPA's concerns were adequately addressed in the final EIS. However, EPA did request that AFS contact them as early as possible in the design process so permit acquisition might be facilitated.	D
F-AFS-J99012-ND	Sheyenne National Grassland, Land Management Plan, Custer National Forest, Richland and Ransom Counties, North Dakota.	EPA's concerns were adequately addressed in the final EIS. However, EPA recommended that ground water and surface water quality be part of the proposed monitoring plan.	I
F-SCS-E36060-KY	Donaldson Creek Watershed, Improvement Program, Caldwell and Crittenden Counties, Kentucky.	EPA's concerns were adequately addressed in the final EIS.	E
		Department of Commerce	
F-EDA-L85011-WA	Expansion of Port of Camas-Washougal, Washougal Industrial Park, Washington.	The Economic Development Administration has decided to fund an office building and marina redevelopment instead of the originally proposed industrial park expansion which would have impacted both wetlands and flood plains. EPA offered comments in support of the special condition of the grant which would require preparation of a master plan which must reflect the wetlands resource. EPA also requested an opportunity to participate in the initial formulation of the plan..	K
		Department of the Interior	
F-BLM-A02150-AK	Outer Continental Shelf (OCS), Oil and Gas Lease Sale No. 55, Eastern Gulf of Alaska (FES-80-12).	EPA is concerned that BLM is unresponsive to our comments on the draft EIS regarding subsea technology and the OCS environmental assessment program (OCSEAP). EPA continues to assert that DOI should analyze the impacts of subsea technologies and prepare relevant controls and contingency measures. EPA believes that regulations should be implemented before this technology is emplaced. EPA also believes that the OCSEAP studies should be factored into presale decisions. In the absence of this information, EPA recommends deleting tracts in cetacean migration routes, deepwater tracts and identified fishery areas (alternatives V).	A
F-BLM-L60003-ID	Boise District Agricultural Development, Elmore, Twin Falls and Owyee Counties, Idaho.	EPA continues to have environmental reservations on the project as proposed. Specifically, EPA believes the proposal will substantially impact water quality and quantity with resulting 5-25 percent losses to Snake River game fisheries, including moderate losses to white sturgeon. Impacts would occur both from irrigation withdrawals associated with new development on 111,015 acres and from probable new hydropower development necessitated by development. Additionally, EPA believes development would also lead to violation of air quality standards.	K
F-OSM-A01058-OO	Implementation of Program Policies for Federal, State, and Indian Abandoned Mine Land Reclamation Under Title IV of the Surface Mining Control and Reclamation Act of 1977.	EPA remains concerned that water monitoring issues raised in EPA comments on the DEIS were not sufficiently addressed in the FEIS. EPA recommends some additional language in the abandoned mine land reclamation guidelines which would remedy these conerns.	A
		Department of Transportation	
F-FAA-K51013-AZ	Scottsdale Municipal Airport, Land Acquisition and Runway Extension, Scottsdale, Maricopa County, Arizona.	EPA's concerns were adequately addressed in the final EIS.	J
F-FHW-C40036-NY	Riverdale Avenue Arterial, Yonkers, Westchester County, New York.	EPA's concerns were adequately addressed in the final EIS.	C
F-FHW-G40033-OK	Oklahoma City West Bypass, OK-74, Oklahoma County, Oklahoma.	EPA feels the initial proposal from Northwest 39th Street to Northwest 178th Street remains inadequate because it does not adequately respond to EPA's comments on the draft EIS. However, the amended plan proposed from 39th Street to 63rd Street appears to be more acceptable because it significantly reduces the potential adverse environmental impacts.	G
		Department of Housing and Urban Development	
F-HUD-D85018-VA	Burke Centre, Mortgage Insurance, Fairfax County, Virginia.	EPA's concerns were adequately addressed in the final EIS.	D
F-HUD-J85026-UT	The Foothills Planned Development, Salt Lake County, Utah.	EPA remains concerned regarding the Federal approval of this type of "leapfrog" development. EPA does not agree as HUD indicates that it is entirely the responsibility for local government to mitigate such impacts. The location of the foothills development is simply not sound land use planning. EPA recommends that HUD reconsider its approval for mortgage insurance of this development.	I
		National Aeronautics and Space Administration	
F-NAS-E12000-FL	John F. Kennedy Space Center, Brevard County, Florida.	EPA's concerns were adequately addressed in the final EIS.	E

Appendix IV.—*Final Environmental Impact Statements Which Were Reviewed and Not Commented on Between Apr. 1 and Apr. 30, 1980*

Identifying No.	Title	Source of review
	Corps of Engineers	
F-COE-H08004-MO	161 kV Overhead Transmission Line, Lake of Ozarks, Across the Osage River and Niangua River, adjacent to the Missouri Highway 5, Camden County, Missouri.	H
	Department of Agriculture	
F-REA-H07006-OO	Holcomb 280 MW Coal-Fired Steam-Electric Generating Plant and Associated 345 kV Transmission, Holcomb, Kansas to McCook, Finney County, Nebraska.	H
F-SCS-E36048-KY	Stewart Creek Watershed Protection, Hopkins County, Kentucky	E
D-SCS-L36062-OR	Calapooya Creek Watershed, Douglas County, Oregon	K
	Department of Commerce	
F-NOA-E60005-NC	North Carolina Coastal Zone Management Program (CZM)	E
	Department of the Interior	
F-NPS-E61029-TN	Stones River National Battlefield and Cemetery, General Management Plan, Rutherford County, Tennessee	E
	Department of Transportation	
F-FAA-B51004-MA	Logan International Airport, Runway 22 Right, Suffolk, Norfolk, Middlesex, and Plymouth Counties, Massachusetts	B
F-FHW-E40145-AL	Western Bypass, City of Talladega, Talladega County, Alabama	E
F-FHW-H40087-NB	U.S. 20, Long Pine Junction, East and West, Brown County, Nebraska	H
F-FHW-L40071-WA	Northeast 12th Street, 100th Avenue NE. to Bellevue Way, 104th Avenue NE. and 100th Avenue NE., Northeast 10th to Northeast 12th, Bellevue, King County, Washington.	K
F-FHW-L40072-ID	ID-64, Nezperce to Kamiah, Lewis County, Idaho (FHWA-IDA-78-02-F)	K
	Department of Housing and Urban Development	
F-HUD-J85027-CO	Old Farm, Homestead, Briargate and Norwood Planned Development, El Paso County, Colorado	I
F-HUD-J85028-CO	Country Club West and Westmoor West Developments, Greeley, Weld County, Colorado	I

Appendix V.—*Regulations, Legislation and Other Federal Agency Actions for Which Comments Were Issued Between Apr. 1 and Apr. 30, 1980*

Identifying No.	Title	General nature of comments	Source for copies of comments
		Corps of Engineers	
A-COE-D32013-MD	Feasibility Report, Navigation Improvements at Tilghman Island and Neavitt Harbors, Maryland.	EPA offered several comments regarding the proposed construction	D
A-COE-D35024-DE	Assessment and Feasibility Report, Port Mahon, Dredging Study, Port Mahon, Delaware.	EPA believes the document is insufficient. Specifically, the need for the project must be shown and the lack of information to exclude the creation of wetlands as a viable alternative.	D
A-COE-K35018-CA	Environmental Assessment, Maintenance Dredging, NAPA River, California.	EPA has no formal comments to offer at this time	J
		Department of Energy	
R-DOE-A09073-OO	10 CFR Part 435, Energy Performance Standards for New Buildings (44 FR 68120).	EPA supports DOE's energy conservation goals and the contribution of BEPS (building energy performance standards) toward that goal. However, EPA is deeply concerned that portions of the BEPS program could result in the deterioation of indoor air quality and therefore adversely affect public health. EPA recommends that mitigation measures be an integral part of BEPS.	A
R-DOE—A09080-00	10 CFR Part 477; Standby Federal Emergency Energy Conservation Plan; Action, Interim Final Rulemaking, Notice of Proposed Rulemaking for 477.44(F), 477.46, 477.47, and 477.48, and Public Hearings (CAS-RM-79-507) (45 FR 8462).	EPA's comments focused on section V(g) "Industrial and Utility Fuel Switching", specifically the discussion of proposals to suspend air pollution requirements under section 110(f) of the Clean Air Act. EPA commented that this measure should only be applied as an option of last resort. The regulations governing the approval of State conservation plans should make it clear that section 110(f) suspensions must meet prewaiver requirements. The effect of these requirements (described in section 110(f)(1)(B) is to prohibit approval of plans which include such suspensions unless all available mandatory and voluntary conservation measures have been implemented. EPA further recommended that any State which does resort to the industrial and utility fuel switching measure coordinate that provision with the State implementation plan for air quality. EPA would then be able to assist States in identifying facilities which can switch and set priorities based on minimizing adverse air quality impacts from conversions.	A

Appendix V.—*Regulations, Legislation and Other Federal Agency Actions for Which Comments Were Issued Between Apr. 1 and Apr. 30, 1980*—Continued

Identifying No.	Title	General nature of comments	Source for copies of comments
		Department of the Interior	
A-SFW-D64001-DE	Assessment, Bombay Hook National Wildlife Refuge, Smyrna, Delaware.	EPA has no comments to offer at this time on the proposed project. However, EPA recommends that appropriate erosion control measures be taken.	D
A-SFW-K64006-CA	Trinity River Basin Fish and Wildlife Management Plan, California.	EPA recommended the best management practices be included in the final report	J
		Department of Transportation	
N-FHW-D40081-WV	FONSI, I-64, Ona-Barboursville Interchange, Cabell County, West Virginia.	EPA has no objections to the project as described	D
N-FAA-F51025-MN	FONSI, Runway Construction and Extension, Miscellaneous Airport Improvements Baudette International Airports, Woods County, Minnesota.	EPA has no objections to the proposed projects	F
		Federal Emergency Management Agency	
A-FEM-A30089-OO	Proposed Federal Emergency Management Agency Disaster Relief Policy for Barrier Islands, Beaches and Spits.	Overall, EPA is pleased with the policy proposal and document. EPA recommended that the FEMA policy statement more clearly state FEMA's intent to satisfy presidential and congressional directives in E.O.'s 11988, 11990 and the unified nation program for floodplain management and the commitment to support no additional unwise development in Barrier Islands.	A
		Federal Energy Regulatory Commission	
A-FRC-K05009-CA	Revised Application for Amendment to License Project No. 2100, Thermalito Afterbay Power Plant, California.	EPA has no comments to offer at this time	J
		Department of Housing and Urban Development	
A-HUD-K80011-CA	Notice of Intent, Downtown Redevelopment Shopping Center, City of San Buenaventura, Ventura County, California.	EPA offered several comments on air and water quality	J
		Nuclear Regulatory Commission	
A-NRC-A06140-PA	Environmental Assessment for Decontamination of the Three Mile Island Unit 2 Reactor Building Atmosphere, Draft NRC Staff Report for Public Comment, Addendum 1 and Addendum 2.	The EPA agrees the most acceptable option is the purging of the reactor building atmosphere in as short a time as possible, using actual meteorological conditions most favorable to dispersion. The EPA also suggested that the NRC agree that the krypton-85 venting environmental impacts as well as those from the epicor-II action will be included in the cumulative impacts assessment in the forthcoming programmatic EIS on the decontamination and disposal of radioactive wastes (44 FR 67738).	A

Appendix VI–*Source for Copies of EPA Comments*

A. Public Information Reference Unit (PM-213), Environmental Protection Agency, Room 2922, Waterside Mall, SW., Washington, D.C. 20460.

B. Director of Public Affairs, Region 1, Environmental Protection Agency, John F. Kennedy Federal Building, Boston, Massachusetts 02203.

C. Director of Public Affairs, Region 2, Environmental Protection Agency, 26 Federal Plaza, New York, New York 10007.

D. Director of Public Affairs, Region 3, Environmental Protection Agency, Curtis Building, 6th and Walnut Streets, Philadelphia, Pennsylvania 19106.

E. Director of Public Affairs, Region 4, Environmental Protection Agency, 345 Courtland Street, NE, Atlanta, GA 30308.

F. Director of Public Affairs, Region 5, Environmental Protection Agency, 230 South Dearborn Street, Chicago, Illinois 60604.

G. Director of Public Affairs, Region 6, Environmental Protection Agency, 1201 Elm Street, Dallas, Texas 75270.

H. Director of Public Affairs, Region 7, Environmental Protection Agency, 1735 Baltimore Street, Kansas City, Missouri 64108.

I. Director of Public Affairs, Region 8, Environmental Protection Agency, 1860 Lincoln Street, Denver, Colorado 80203.

J. Office of External Affairs, Region 9, Environmental Protection Agency, 213 Fremont Street, San Francisco, California 94108.

K. Director of Public Affairs, Region 10, Environmental Protection Agency, 1200 Sixth Avenue, Seattle, Washington 98101.

FR Doc. 80-29310 Filed 9-23-80; 8:45 am]

BILLING CODE 6560-01-M

[OPTS-51141; FRL 1614-5]

Adipic Acid, Dimethyl 1,4-Cyclohexane Dicarboxylate, Maleic Anhydride, Neopentyl Glycol, Phthalic Anhydride, Trimellitic Anhydride, Trimethylol Ethane Polymer; Premanufacture Notice

AGENCY: Environmental Protection Agency (EPA).

ACTION: Notice.

SUMMARY: Section 5(a)(1) of the Toxic Substances Control Act (TSCA) requires any person who intends to manufacture or import a new chemical substance to submit a premanufacture notice (PMN) to EPA at least 90 days before manufacture or import commences. Section 5(d)(2) requires EPA to publish in the **Federal Register** certain information about each PMN within 5 working days after receipt. This Notice announces receipt of a PMN and provides a summary.

DATE: Written comments by October 28, 1980.

ADDRESS: Written comments to: Document Control Officer (TS-793), Office of Pesticides and Toxic Substances, Environmental Protection Agency, 401 M St. SW., Washington, DC 20460 (202-755-8050).

FOR FURTHER INFORMATION CONTACT: Carolyn Brown, Premanufacturing Review Division (TS-794), Office of Pesticides and Toxic Substances, Environmental Protection Agency, 401 M St. SW., Washington, DC 20460 (202-426-3980).

SUPPLEMENTARY INFORMATION: Section 5(a)(1) of TSCA [90 Stat. 2012 (15 U.S.C. 2604)], requires any person who intends to manufacture or import a new chemical substance to submit a PMN to EPA at least 90 days before manufacture or import commences. A "new" chemical substance is any substance that is not on the Inventory of existing substances compiled by EPA under Section 8(b) of TSCA. EPA first published the Initial Inventory on June 1, 1979. Notice of availability of the Initial Inventory was published in the **Federal Register** of May 15, 1979 (44 FR 28558), and the notice of availability of the Revised Inventory was published on July 29, 1980 (45 FR 50544). The requirement to submit a PMN for new chemical substances manufactured or imported for commercial purposes became effective on July 1, 1979.

EPA has proposed premanufacture notification rules and forms in the **Federal Register** issues of January 10, 1979 (44 FR 2242) and October 16, 1979 (44 FR 59764). These regulations, however, are not yet in effect. Interested persons should consult the Agency's Interim Policy published in the **Federal Register** of May 15, 1979 (44 FR 28564) for guidance concerning premanufacture notification requirements prior to the effective date of these rules and forms. In particular, see page 28567 of the Interim Policy.

A PMN must include the information listed in Section 5(d)(1) of TSCA. Under section 5(d)(2) EPA must publish in the **Federal Register** nonconfidential information on the identity and use(s) of the substance, as well as a description of any test data submitted under section 5(b). In addition, EPA has decided to publish a description of any test data submitted with the PMN and EPA will publish the identity of the submitter unless this information is claimed confidential.

Publication of the section 5(d)(2) notice is subject to section 14 concerning disclosure of confidential information. A company can claim confidentiality for any information submitted as part of a PMN. If the company claims confidentiality for the specific chemical identity or use(s) of the chemical, EPA encourages the submitter to provide a generic use description, a nonconfidential description of the potential exposures from use, and a generic name for the chemical. EPA will publish the generic name, the generic use(s), and the potential exposure descriptions in the **Federal Register**.

If no generic use description or generic name is provided, EPA will develop one and after providing due notice to the submitter, will publish an amended **Federal Register** notice. EPA immediately will review confidentiality claims for chemical identity, chemical use(s), the identity of the submitter, and for health and safety studies. If EPA determines that portions of this information are not entitled to confidential treatment, the Agency will publish an amended notice and will place the information in the public file, after notifying the submitter and complying with other applicable procedures.

After receipt, EPA has 90 days to review a PMN under section 5(a)(1). The section 5(d)(2) **Federal Register** notice indicates the date when the review period ends for each PMN. Under section 5(c), EPA may, for good cause, extend the review period for up to an additional 90 days. If EPA determines that an extension is necessary, it will publish a notice in the **Federal Register**.

Once the review period ends, the submitter may manufacture the substance unless EPA has imposed restrictions. When the submitter begins to manufacture the substance, he must report to EPA, and the Agency will add the substance to the Inventory. After the substance is added to the Inventory, any company may manufacture it without providing EPA notice under section 5(a)(1)(A).

Therefore, under the Toxic Substances Control Act, a summary of the data taken from the PMN is published herein.

Interested persons may, on or before October 28, 1980, submit to the Document Control Officer (TS-793), Rm. E-447, Office of Pesticides and Toxic Substances, 401 M St., SW, Washington, DC 20460, written comments regarding this notice. Three copies of all comments shall be submitted, except that individuals may submit single copies of comments. The comments are to be identified with the document control number "[OPTS-51141]" and the PMN number. Comments received may be seen in the above office between 8:00 a.m. and 4:00 p.m., Monday through Friday, excluding holidays.

(Sec. 5, 90 Stat. 2012 (15 U.S.C. 2604))

Dated: September 17, 1980.

Warren R. Muir,

Deputy Assistant Administrator for Toxic Substances.

PMN 80-234.

Close of Review Period. November 27, 1980.

Manufacturer's Identity. Inmont Corp., 5935 Milford Ave., Detroit, MI 48210.

Specific Chemical Identity. Adipic acid, dimethyl 1,4-cyclohexane dicarboxylate, maleic anhydride, neopentyl glycol, phthalic anhydride, trimellitic anhydride, trimethylol ethane polymer.

The following summary is taken from data submitted by the manufacturer in the PMN.

Use. Automative primer.

Production Estimates.

	Kilograms per year	
	Minimum	Maximum
1st year	120,000	150,000
2d year	240,000	300,000
3d year	360,000	450,000

Physical/Chemical Properties.

Molecular weight—945
Acid number—18-22
Hydroxyl number—135-150
Weight/gallon—9.50 lb.

Toxicity Data. No data were submitted.

Exposure. The manufacturer states that there will be no exposure to this substance.

Environmental Release/Disposal. Inmont Corp. states that there will be no release of the PMN substance into the environment and that waste products (methanol and water from the condenser) are collected and shipped to a disposal firm for incineration. During use of the PMN substance, waste sludge is collected in drums and buried.

[FR Doc. 80-29522 Filed 9-23-80; 8:45 am]
BILLING CODE 6560-01-M

[FRL 1614-6; OPTS-51137]

Polyurethane Polyacrylic Block Polymer Premanufacture Notice

AGENCY: Environmental Protection Agency (EPA).

ACTION: Notice.

SUMMARY: Section 5(a)(1) of the Toxic Substances Control Act (TSCA) requires any person who intends to manufacture or import a new chemical substance to submit a premanufacture notice (PMN)

to EPA at least 90 days before manufacture or import commences. Section 5(d)(2) requires EPA to publish in the **Federal Register** certain information about each PMN within 5 working days after receipt. This Notice announces receipt of a PMN and provides a summary.

DATE: Written comments by November 3, 1980.

ADDRESS: Written comments to: Document Control Officer (TS-793), Office of Pesticides and Toxic Substances, Environmental Protection Agency, 401 M St., SW., Washington, D.C. 20460 (202-755-8050).

FOR FURTHER INFORMATION CONTACT: David Dull, Premanufacturing Review Division (TS-794), Office of Pesticides and Toxic Substances, Environmental Protection Agency, 401 M St., SW., Washington, D.C. 20460 (202/426-2601).

SUPPLEMENTAL INFORMATION: Section 5(a)(1) of TSCA [90 Stat. 2012 (15 U.S.C. 2604)], requires any person who intends to manufacture or import a new chemical substance to submit a PMN to EPA at least 90 days before manufacture or import commences. A "new" chemical substance is any substance that is not on the Inventory of existing substances compiled by EPA under Section 8(b) of TSCA. EPA first published the Initial Inventory on June 1, 1979. Notice of availability of the Initial Inventory was published in the **Federal Register** of May 15, 1979 (44 FR 28558), and the notice of availability of the Revised Inventory was published on July 29, 1980 (45 FR 50544). The requirement to submit a PMN for new chemical substances manufactured or imported for commercial purposes became effective on July 1, 1979.

EPA has proposed premanufacture notification rules and forms in the **Federal Register** issues of January 10, 1979 (44 FR 2242) and October 16, 1979 (44 FR 59764). These regulations, however, are not yet in effect. Interested persons should consult the Agency's Interim Policy published in the **Federal Register** of May 15, 1979 (44 FR 28564) for guidance concerning premanufacture notification requirements prior to the effective date of these rules and forms. In particular, see page 28567 of the Interim Policy.

A PMN must include the information listed in Section 5(d)(1) of TSCA. Under section 5(d)(2) EPA must publish in the **Federal Register** nonconfidential information on the identity and use(s) of the substance, as well as a description of any test data submitted under section 5(d). In addition, EPA has decided to publish a description of any test data submitted with the PMN and EPA will publish the identity of the submitter unless this information is claimed confidential.

Publication of the section 5(d)(2) notice is subject to section 14 concerning disclosure of confidential information. A company can claim confidentiality for any information submitted as part of a PMN. If the company claims confidentiality for the specific chemical identity or use(s) of the chemical, EPA encourages the submitter to provide a generic use description, a nonconfidential description of the potential exposures from use, and a generic name for the chemical. EPA will publish the generic name, the generic use(s), and the potential exposure descriptions in the **Federal Register.**

If no generic use description or generic name is provided, EPA will develop one and after providing due notice to the submitter, will publish an amended **Federal Register** notice. EPA immediately will review confidentiality claims for chemical identity, chemical use(s), the identity of the submitter, and for health and safety studies. If EPA determines that portions of this information are not entitled to confidential treatment, the Agency will publish an amended notice and will place the information in the public file, after notifying the submitter and complying with other applicable procedures.

After receipt, EPA has 90 days to review a PMN under section 5(a)(1). The section 5(d)(2) **Federal Register** notice indicates the date when the review period ends for each PMN. Under section 5(c), EPA may, for good cause, extend the review period for up to an additional 90 days. If EPA determines that an extension is necessary, it will publish a notice in the **Federal Register.**

Once the review period ends, the submitter may manufacture the substance unless EPA has imposed restrictions. When the submitter begins to manufacture the substance, he must report to EPA, and the Agency will add the substance to the Inventory. After the substance is added to the Inventory, any company may manufacture it without providing EPA notice under section 5(a)(1)(A).

Therefore, under the Toxic Substances Control Act, a summary of the data taken from the PMN is published herein.

Interested persons may, on or before November 3, 1980, submit to the Document Control Officer (TS-793), Rm. E-447, Office of Pesticides and Toxic Substances, 401 M St., SW, Washington, DC 20460, written comments regarding this notice. Three copies of all comments shall be submitted, except that individuals may submit single copies of comments. The comments are to be identified with the document control number "[OPTS-51137"] and the PMN number. Comments received may be seen in the above office between 8:00 a.m. and 4:00 p.m., Monday through Friday, excluding holidays.

(Sec. 5, 90 Stat. 2012 (15 U.S.C. 2604))

Dated: September 17, 1980.

Warren R. Muir,

Deputy Assistant Administrator for Toxic Substances.

PMN 80-241.

Close of Review Period. December 3, 1980.

Manufacturer's Identity. E. I. du Pont de Nemours & Co., 1007 Market St., Wilmington, DE 19898.

Specific Chemical Identity. Claimed confidential business information. Generic name provided: Polyurethane polyacrylic block polymer.

The following summary is taken from data submitted by the manufacturer in the PMN.

Use. Isolated intermediate.

Production Estimates. Claimed confidential business information.

Physical/Chemical Properties. Claimed confidential business information.

Toxicity Data.

Acute oral test (rats)—11,000 mg/kg.

E. I. du Pont de Nemours states that with the polymer's low measured monomer and impurity content and minimal handling exposure, environmental or occupational hazard in the new substance's manufacture, distribution, use and/or disposal is not anticipated.

Occupational Exposure.

Activity	Potential route(s)	Number of potentially exposed workers	Maximum duration of exposure
Manufacturing	Dermal	2 per shift	8 hours per shift, 2 shifts per day, 52 days per year.

The submitter states that employees utilize ventialtion, protective clothing and equipment in all phases of manufacture and processing and that dermal contact or inhalation would occur only in the event of careless handling or failure to wear protective equipment/clothing.

Environmental Release/Disposal. The manufacturer states that release of the new substance into the environment will be minimal and incidental. The wash solvent is filtered and recycled in subsequent batches; solid waste is incinerated.

[FR Doc. 80-29523 Filed 9-23-80; 8:45 am]

BILLING CODE 6560-01-M

[FRL 1614-7; OPTS-59034]

Polyurethane Polyacrylic Block Polymer Premanufacture Exemption Application

AGENCY: Environmental Protection Agency (EPA).

ACTION: Notice.

SUMMARY: Section 5(a)(1)(A) of the Toxic Substances Control Act (TSCA) requires any person intending to manufacture or import a new chemical substance for a commercial purpose in the United States to submit a premanufacture notice (PMN) to EPA at least 90 days before he commences such manufacture or import. Under Section 5(h) the Agency may, upon application, exempt any person from any requirement of section 5 to permit such person to manufacture or process a chemical for test marketing purposes. Section 5(h)(6) requires EPA to issue a notice of receipt of any such application for publication in the **Federal Register.** This notice announces receipt of an application for an exemption from the premanufacture reporting requirements for test marketing purposes and requests comments on the appropriateness of granting the exemption.

DATE: The Agency must either approve or deny this application by October 19, 1980. Persons should submit written comments on the application no later than October 10, 1980.

ADDRESS: Written comments to: Document Control Officer (TS-793), Office of Pesticides and Toxic Substances, Environmental Protection Agency, 401 M St., SW, Washington, DC 20460 (202-755-8050).

FOR FURTHER INFORMATION CONTACT: David Dull, Premanufacturing Review Division (TS-794), Office of Pesticides and Toxic Substances, Environmental Protection Agency, Washington, DC 20460 (202-426-2601).

SUPPLEMENTARY INFORMATION: Under Section 5 of TSCA [90 Stat. 2012 (15 U.S.C. 2604)], any person who intends to manufacture or import a new chemical substance for commercial purposes in the United States must submit a notice to EPA before the manufacture or import begins. A "new" chemical substance is any chemical substance that is not on the Inventory of existing chemical substances compiled by EPA under Section 8(b) of TSCA. EPA first published the Initial Inventory on June 1, 1979. Notice of availability of the Initial Inventory was published in the **Federal Register** on May 15, 1979 (44 FR 28558) and the notice of availability of the Revised Inventory was published on July 29, 1980 (45 FR 50544). The requirement to submit a PMN for new chemical substances manufactured or imported for commercial purposes became effective on July 1, 1979.

Section 5(a)(1) requires each PMN to be submitted in accordance with section 5(d) and any applicable requirement of chemical substances that are subject to testing rules under section 4. Section 5(b)(2) requires additional information in PMN's for substances which EPA, by rules under section 5(b)(4), has determined may present unreasonable risks of injury to health or the environment.

Section 5(h), "Exemptions," contains several provisions for exemptions from some or all of the requirements of section 5. In particular, section 5(h)(1) authorized EPA, upon application, to exempt persons from any requirement of section 5(a) or section 5(b) to permit the persons to manufacture or process a chemical substance for test marketing purposes. To grant such an exemption, the Agency must find that the test marketing activities will not present any unreasonable risk of injury to health or the environment. EPA must either approve or deny the application within 45 days of its receipt, and the Agency must publish a notice of its disposition in the **Federal Register.** If EPA grants a test marketing exemption, it may impose restrictions on the test marketing activities.

Under section 5(h)(6), EPA must publish in the **Federal Register** a notice of receipt of an application under section 5(h)(1) immediately after the Agency receives the application. The notice identifies and briefly describes the application (subject to section 14 confidentiality restrictions) and gives interested persons an opportunity to comment on it and whether EPA should grant the exemption. Because the Agency must act on the application within 45 days, interested persons should provide comments within 15 days after the notice appears in the **Federal Register.**

EPA has proposed Premanufacture Notification Requirements and Review Procedures published in the **Federal Register** of January 10, 1979 (44 FR 2242) and October 16, 1979 (44 FR 59764) containing proposed premanufacture rules and notice forms. Proposed 40 CFR 720.15 (44 FR 2268) would implement section 5(h)(1) concerning exemptions for test marketing and includes proposed 40 CFR 720.15(c) concerning the section 5(h)(6) **Federal Register** notice. However, these requirements are not yet in effect. In the meantime, EPA has published a statement of Interim Policy published in the **Federal Register** of May 15, 1979 (44 FR 28564) which applies to PMN's submitted prior to promulgation of the rules and notice forms.

Interested persons may, on or before October 10, 1980, submit to the Document Control Officer (TS-793), Rm. E-447, Office of Pesticides and Toxic Substances, 401 M St., SW, Washington, DC 20460, written comments regarding this notice. Three copies of all comments shall be submitted, except that individuals may submit single copies of comments. The comments are to be identified with the document control number "[OPTS-59034]". Comments received may be seen in the above office between 8:00 a.m. and 4:00 p.m., Monday through Friday excluding holidays.

(Sec. 5, 90 Stat. 2012 (15 U.S.C. 2604))

Dated: September 17, 1980.

Warren R. Muir,

Deputy Assistant Administrator for Toxic Substances.

TM 80-39

Close of Review Period. October 19, 1980.

Manufacturer's Identity. E. I. du Pont de Nemours & Co., 1007 Market St., Wilmington, DE 19898.

Specific Chemical Identity. Claimed confidential business information. Generic name provided: Polyurethane polyacrylic block polymer.

The following summary is taken from data submitted by the manufacturer in the test marketing exemption.

Use. Isolated intermediate.

Production Estimates. Twenty gallons of the test material and 1,200 gallons of the final product using the test material as an intermediate. The test market period will cover a maximum of 20 days.

Physical/Chemical Properties. Claimed confidential business information.

Toxicity Data.

Acute oral test (rats)—11,000 mg/kg.

E. I. du Pont de Nemours states that with the polymer's low measured monomer and impurity content and minimal handling exposure, environmental or occupational hazard in the new substance's manufacture, distribution, use and/or disposal is not anticipated.

Occupational Exposure.

Site/activity	Potential route(s)	Number of potentially exposed workers	Maximum duration of exposure
Philadelphia, PA: Manufacturing	Dermal	2 per shift	2 shifts per day, 8 hours per shift; 1 day.
Toledo, OH: Manufacturing	Dermal	2 per shift	1 shift per day, 8 hours per shift; 1 day.
User's site: Use	Dermal, Inhalation.	8 to 10 per shift	1 hour per shift, 1 shift per day; 20 days.

Environmental Release/Disposal.

The manufacturer states that release of the new substance into the environment will be minimal and incidental; that waste matters in the manufacturer's site will be recycled/incinerated and in the user's site, landfilled.

[FR Doc. 80-29524 Filed 9-23-80; 8:45 am]

BILLING CODE 6560-01-M

[FRL 1614-8; OPTS-51139]

Certain Chemicals; Premanufacture Notices

AGENCY: Environmental Protection Agency (EPA).

ACTION: Notice.

SUMMARY: Section 5(a)(1) of the Toxic Substances Control Act (TSCA) requires any person who intends to manufacture or import a new chemical substance to submit a premanufacture notice (PMN) to EPA at least 90 days before manufacture or import commences. section 5(d)(2) requires EPA to publish in the **Federal Register** certain information about each PMN within 5 working days after receipt. This Notice announces receipt of two PMN's and provides a summary of each.

DATES: Written comments by: PMN 80-236—October 18, 1980; PMN 80-237—November 2, 1980.

ADDRESS: Written comments to: Document Control Officer (TS-793), Office of Pesticides and Toxic Substances, Environmental Protection Agency, 401 M St., SW, Washington, DC 20460 (202-755—8050).

FOR FURTHER INFORMATION CONTACT: Kirk Maconaughey, Premanufacturing Review Division (TS-794), Office of Pesticides and Toxic Substances, Environmental Protection Agency, 401 M St., SW, Washington, DC 20460 (202-426-3936).

SUPPLEMENTARY INFORMATION: Section 5(a)(1) of TSCA [90 Stat. 2012 (15 U.S.C. 2604)], requires any person who intends to manufacture or import a new chemical substance to submit a PMN to EPA at least 90 days before manufacture or import commences. A "new" chemical substance is any substance that is not on the Inventory of existing substances compiled by EPA under Section 8(b) of TSCA. EPA first published the Initial Inventory on June 1, 1979. Notice of availability of the Initial Inventory was published in the **Federal Register** of May 15, 1979 (44 FR 28558), and the notice of availability of the Revised Inventory was published on July 29, 1980 (45 FR 50544). The requirement to submit a PMN for new chemical substances manufactured or imported for commercial purposes became effective on July 1, 1979.

EPA has proposed premanufacture notification rules and forms in the **Federal Register** issues of January 10, 1979 (44 FR 2242) and October 16, 1979 (44 FR 59764). These regulations, however, are not yet in effect. Interested persons should consult the Agency's Interim Policy published in the **Federal Register** of May 15, 1979 (44 FR 28564) for guidance concerning premanufacture notification requirements prior to the effective date of these rules and forms. In particular, see page 28567 of the Interim Policy.

A PMN must include the information listed in Section 5(d)(1) of TSCA. Under section 5(d)(2) EPA must publish in the **Federal Register** nonconfidential information on the identity and use(s) of the substance, as well as a description of any test data submitted under section 5(b). In addition, EPA has decided to publish a description of any test data submitted with the PMN and EPA will publish the identity of the submitter unless this information is claimed confidential.

Publication of the section 5(d)(2) notice is subject to section 14 concerning disclosure of confidential information. A company can claim confidentiality for any information submitted as part of a PMN. If the company claims confidentiality for the specific chemical identity or use(s) of the chemical, EPA encourages the submitter to provide a generic use description, a nonconfidential description of the potential exposures from use, and a generic name for the chemical. EPA will publish the generic name, the generic use(s), and the potential exposure descriptions in the **Federal Register**.

If no generic use description or generic name is provided, EPA will develop one and after providing due notice to the submitter, will publish an amended **Federal Register** notice. EPA immediately will review confidentiality claims for chemical identity, chemical use, the identity of the submitter, and for health and safety studies. If EPA determines that portions of this information are not entitled to confidential treatment, the Agency will publish an amended notice and will place the information in the public file, after notifying the submitter and complying with other applicable procedures.

After receipt, EPA has 90 days to review a PMN under section 5(a)(1). The section 5(d)(2) **Federal Register** notice indicates the date when the review period ends for each PMN. Under section 5(c), EPA may, for good cause, extend the review period for up to an additional 90 days. If EPA determines that an extension is necessary, it will publish a notice in the **Federal Register**.

Once the review period ends, the submitter may manufacture the substance unless EPA has imposed restrictions. When the submitter begins to manufacture the substance, he must report to EPA, and the Agency will add the substance to the Inventory. After the substance is added to the Inventory, any company may manufacture it without providing EPA notice under section 5(a)(1)(A).

Therefore, under the Toxic Substances Control Act, summaries of the data taken from the PMN's are published herein.

Interested persons may, on or before the dates shown under "DATES", submit to the Document Control Officer (TS-793), Rm. E-447, Office of Pesticides and Toxic Substances, 401 M St., SW, Washington, DC 20460, written comments regarding these notices. Three copies of all comments shall be submitted, except that individuals may submit single copies of comments. The comments are to be identified with the document control number "[OPTS-51139]" and the specific PMN number. Comments received may be seen in the above office between 8:00 a.m. and 4:00 p.m., Monday through Friday, excluding holidays.

(Sec. 5, 90 Stat. 2012 (15 U.S.C. 2604))

Dated: September 17, 1980.

Warren R. Muir,

Deputy Assistant Administrator for Toxic Substances.

PMN 80-236.

Close of Review Period. November 27, 1980.

Manufacturer's Identity. Claimed confidential business information. Generic information provided: Annual sales—In excess of $500 million. Manufacturing site—Northeast region, U.S. Standard Industrial Classification Code—282.

Specific Chemical Identity. Claimed confidential business information.

Generic name provided: Aliphatic polyurethane water-borne dispersion.

The following summary is taken from data submitted by the manufacturer in the PMN.

Use. Water-borne coating.

Production Estimates

	(Kilograms per year)	
	Minimum	Maximum
1st year	2,500	20,000
2d year	10,000	50,000
3d year	15,000	150,000

Physical/Chemical Properties

Solids	31%.
Viscosity	150 cps.
Vehicle	Water, *N*-methylpyrrolidone.

Toxicity Data. No data were submitted.

Exposure. The manufacturer states that human contact by consumers would involve the fully cured coating.

Environmental Release/Disposal. The manufacturer states that there will be no waste effluent from the manufacture of this polymer. Residual monomers and solvent vapors in the reactor are disposed of by incineration. Discharge of the finished product to land or water would only result from an accidential spill.

PMN 80-237.

Close of Review Period. December 1, 1980.

Manufacturer's Identity. Claimed confidential business information. Generic information provided: Annual sales—In excess of $500 million. Manufacturing site—Northeast, U.S. Standard Industrial Classification Code—282.

Specific Chemical Identity. Claimed confidential business information. Generic name provided: Aliphatic polyurethane water-borne dispersion.

The following summary is taken from data submitted by the manufacturer in the PMN.

Use. Water-borne coating.

Production Estimates

	(Kilograms per year)	
	Minimum	Maximum
1st year	2,500	20,000
2d year	10,000	50,000
3d year	15,000	150,000

Physical/Chemical Properties

Solids	31%.
Viscosity	100 cps.
Vehicle	Water, *N*-methylpyrrolidone.

Toxicity Data. No data were submitted.

Exposure. The manufacturer states that employee exposure to the raw materials is minimized by mechanical transfer of reactive monomers from storage tanks and drums into the process facilities. Workers are required to wear gloves to prevent skin contact by dispersion.

Environmental Release/Disposal. The submitter states that fumes could escape into the atmosphere during drum packaging of finished product. Residual monomers and solvent vapors in the reactor are disposed of by incineration. Discharge of the finished product to land or water could only result from an accidental spill.

[FR Doc. 80-29525 Filed 9-23-80; 8:45 am]

BILLING CODE 6560-01-M

[FRL 1614-4]

Region 6; Approval of an Amendment to the Previously Approved NESHAP Application of Firestone Plastics Co.

Notice is hereby given that on April 15, 1980, the Environmental Protection Agency approved an amendment to Firestone Plastics Company's previously-approved application to construct a new polyvinyl chloride facility in Addis, Louisiana. Proposed in the amendment is the installation of a gaseous thermal incinerator which will back up the carbon adsorption system and improve the vented gaseous vinyl chloride emissions control system. This approval has been issued under EPA's National Emission Standards for Hazardous Air Pollutants (NESHAP), 40 CFR 61, Subparts A and F, which are standards for vinyl chloride that are applicable to the construction of new plants that produce polyvinyl chloride.

The letter of Approval does not relieve Firestone Plastics Company of the legal responsibility to comply with the NESHAP regulations applicable to vinyl chloride source, 40 CFR 61, Subparts A and F, or to comply with other laws and regulations, federal, state or local, which may be applicable.

Approval of this application is reviewable under Section 307(b)(1) of the Clean Air Act only in the U.S. Court of Appeals for the Fifth Circuit. A petition for the review must be filed on or before (60 days from publication in the **Federal Register**).

Copies of the letter of Approval issued to Firestone Plastics Company are available for public inspection upon request at the following locations:

Air Enforcement Branch, Environmental Protection Agency, Region 6, First International Building, 1201 Elm Street, Dallas, Texas 75270.

Air Quality Division, Department of Natural Resources, Natural Resources Building, 625 North Fourth, Baton Rouge, Louisiana 70804.

Dated: September 3, 1980.

Myron Knudson,

Acting Regional Administrator, U.S. Environmental Protection Agency, Region 6.

[FR Doc. 80-29521 Filed 9-23-80; 8:45 am]

BILLING CODE 6560-01-M

[FRL 1614-3]

National Emission Standards for Hazardous Air Pollutants; Approval of Application of Borden Chemical

Notice is hereby given that on April 10, 1980, the Environmental Protection Agency approved the application of Borden Chemical to construct an expansion of its existing ethylene dichoride-vinyl chloride monomer production facilities and to construct a new polyvinyl chloride production facility at its chemical complex in Geismar, Louisiana.

This approval has been issued under EPA's National Emission Standards for Hazardous Air Pollutants (NESHAP), 40 CFR 61, Subparts A and F, which are standards for vinyl chloride applicable to the construction or modification of plants which produce ethylene dichloride, vinyl chloride and polyvinyl chloride.

The letter of approval does not relieve Borden Chemical of the legal responsibility to comply with the NESHAP regulations applicable to vinyl chloride sources, 40 CFR 61, Subparts A and F, or to comply with other laws and regulations, federal, state or local, which may be applicable.

Approval of this application is reviewable under Section 307(a)(1) of the Clean Air Act only in the U.S. Court of Appeals for the Fifth Circuit. A petition for review must be filed on or before November 24, 1980.

Copies of the letter of approval issued to Borden Chemical are available for public inspection upon request at the following locations:

Air Enforcement Branch, Environmental Protection Agency, Region 6, First International Building, 1201 Elm Street, Dallas, Texas 75270.

Air Quality Division, Department of Natural Resources, Natural Resources Building 625 North Fourth, Baton Rouge, Louisiana 70804.

Dated: September 3, 1980.

Myron Knudson,

Acting Regional Administrator, U.S. Environmental Protection Agency, Region 6.

[FR Doc. 80-29520 Filed 9-23-80; 8:45 am]

BILLING CODE 6560-01-M

[FRL 1614-2]

National Emission Standards for Hazardous Air Pollutants; Approval of Application of Dow Chemical U.S.A.

Notice is hereby given that on April 14, 1980, the Environmental Protection Agency approved Dow Chemical U.S.A.'s application to construct and install a rotary kiln incinerator which has the capability of incinerating wastewater treatment plant sludge at its existing chemical complex in Plaquemine, Louisiana.

This approval has been issued under EPA's National Emission Standards for Hazardous Air Pollutants (NESHAP), 40 CFR 61, Subparts A and E, which are standards for mercury that are applicable to the construction of new stationary sources that incinerate or dry wastewater treatment plant sludge.

The letter of approval does not relieve Dow Chemical U.S.A. of the legal responsibility to comply with NESHAP regulations applicable to mercury sources, 40 CFR 61, Subparts A and E, or to comply with other laws and regulations, federal, state or local, which may be applicable.

Approval of this application is reviewable under Section 307(b)(1) of the Clean Air Act only in the U.S. Court of Appeals for the Fifth Circuit. A petition for review must be filed on or before November 24, 1980.

Copies of the letter of Approval issued to Dow Chemical U.S.A. are available for public inspection upon request at the following locations:

Air Enforcement Branch, Environmental Protection Agency, Region 6, First International Building, 1201 Elm Street, Dallas, Texas 75270.

Air Quality Division, Department of Natural Resources, Natural Resources Building, 625 North Fourth, Baton Rouge, Louisiana 70804.

Dated: September 3, 1980.

Myron Knudson,

Acting Regional Administrator U.S. Environmental Protection Agency Region 6.

[FR Doc. 80-29519 Filed 9-23-80; 8:45 am]

BILLING CODE 6560-01-M

[FRL 7616-3]

Science Advisory Board; Meeting

The meeting is to be held in less than the 15 days required because the nature of the sampling to be performed must commence at once if it is to be completed before the onset of winter. Under Pub. L. 92-463, notice is hereby given for a meeting of the Study Group on Sampling Protocol of the Science Advisory Board of the U.S. Environmental Protection Agency to be held on October 2nd and 3rd, starting at 9:00 am and ending at 4:30 pm. The meeting location is: Environmental Protection Agency, National Enforcement Investigation Center, Building #53, General Conference Room, Denver Federal Center, Denver, Colorado 80225.

The purpose of the meeting is to provide review and comment on the sampling protocols that have been proposed for the Love Canal area, as requested by the Office of Research and Development.

Persons desiring additional information may contact Dr. Douglas Seba, Science Advisory Board, Environmental Protection Agency, Phone Number 202-472-9444.

Richard M. Dowd,

Executive Director, Science Advisory Board.

[FR Doc. 29654 Filed 9-23-80; 8:45 am]

BILLING CODE 6560-01-M

FEDERAL COMMUNICATIONS COMMISSION

[BC Docket No. 80-458, File No. BPH-790608AK; 80-459, File No. BPH-791106AF]

Cajun Communications, Inc., and Mid-Acadiana Broadcasting Corp.; Designating Applications for Consolidated Hearing on Stated Issues

Adopted: August 28, 1980.

Released: September 18, 1980.

In re Applications of Cajun Communications, Inc., Kaplan, Louisiana, Req: 97.7 MHz, Channel 249 1.82 kW (H&V), 390 feet and Mid-Acadiana Broadcasting Corporation, Kaplan, Louisiana, Req: 97.7 MHz, Channel 249 3.0 kW (H&V), 300 feet, for a Construction Permit for a New FM Station.

1. The Commission, by the Chief, Broadcast Bureau, acting pursuant to delegated authority, has under consideration the above-captioned mutually exclusive applications of Cajun Communications, Inc. (Cajun) and Mid-Acadiana Broadcasting Corporation (Mid-Acadiana) for a construction permit for a new FM station at Kaplan, Louisiana.

2. Data submitted by the applicants indicate that there would be no significant difference in the size of the areas which would receive service from the proposals. The contour of Cajun's signal would cover 656 square miles and the contour of Mid-Acadiana's signal would cover 637 square miles. There is a significant difference, however, in the estimated populations to be served. Cajun says its signal would serve 81,988 persons and Mid-Acadiana says its signal would serve 92,046 persons. An analysis of the two contours shows that they cover nearly identical areas; therefore, either one party made an error in its estimation of population, or the two parties based their estimates on different figures (one, perhaps, using the 1970 census, and the other using a more recent estimate). Consequently, for the purpose of comparison, the populations which would receive FM service of 1 mV/m or greater strength, together with the availability of other primary aural services in such areas, will be considered under the standard comparative issue only if necessary after resolution of the aforementioned discrepancy.

3. The applicants are qualified to construct and operate as proposed. However, since the proposals are mutually exclusive, they must be designated for hearing in a consolidated proceeding on the issues specified below.

4. Accordingly, it is ordered, That pursuant to Section 309(e) of the Communications Act of 1934, as amended, the applications ARE DESIGNATED FOR HEARING IN A CONSOLIDATED PROCEEDING, at a time and place to be specified in a subsequent Order, upon the following issues:

1. To determine which of the proposals would, on a comparative basis, better serve the public interest.

2. To determine, in the light of the evidence adduced pursuant to the foregoing issue, which of the applications should be granted.

5. It is further ordered, That, to avail themselves of the opportunity to be heard, the applicants herein shall, pursuant to Section 1.221(c) of the Commission's Rules, in person or by attorney, within 20 days of the mailing of this Order, file with the Commission in triplicate a written appearance stating an intention to appear on the date fixed for the hearing and to present evidence on the issues specified in this Order.

6. It is further ordered, That the applicants herein shall, pursuant to Section 311(a)(2) of the Communications Act of 1934, as amended and Section 73.3594 of the Commission's Rules, give notice of the hearing (either individually or, if feasible and consistent with the Rules, jointly) within the time and in the manner prescribed in such Rule, and

shall advise the Commission of the publication of such notice as required by Section 73.3594(g) of the Rules.

Federal Communications Commission.

Jerold L. Jacobs,

Chief, Broadcast Facilities Division.

[FR Doc. 80-29558 Filed 9-23-80; 8:45 am]

BILLING CODE 6712-01-M

[BC Docket No. 80-450, File No. BPH-10,776; 80-451, File No. BPH-780831AN]

Gene E. McCoy, et al.; Designating Applications for Consolidated Hearing on Stated Issues

Hearing Designation Order

Adopted: August 28, 1980.

Released: September 18, 1980.

In re Applications of Gene E. McCoy, Clifford C. Phillips, Jr., Billie E. Wilcox and John R. Wilcox tr/as Slab Fork Broadcasting Company, Mullens, West Virginia, Req.: 92.7 MHz, Channel 224, 3kW (H&V) 243 feet and Wyoming Broadcasting Company, Pineville, West Virginia, Req.: 92.7 MHz, Channel 224, 3 kW (H&V) 300 feet for construction permit for a new FM Station.

1. The Commission, by the Chief, Broadcast Bureau, acting pursuant to delegated authority, has under consideration the above-captioned mutually exclusive applications filed by Slab Fork Broadcasting Company (Fork) and Wyoming Broadcasting Company (Wyoming).

2. *Fork.* The applicant's transmitter site is short-spaced one mile with the co-pending and timely filed application of R&S Broadcasting Company, Inc., for a new station at Summersville, West Virginia. As a result, Fork requests a waiver of Section 73.207(a) of the Commission's Rules. Rather than consolidate what should actually be two distinct proceedings, we will waive Section 73.207(a) of the Rules. Likewise, we have also waived the short-spacing of R & S Broadcasting Company, Inc., and it will be designated for a comparative hearing with another proposal for Summersville.

3. *Wyoming.* Applicants for new broadcast stations are required by Section 73.3580(f) of the Commission's Rules to give local notice of the filing of their applications. They must then file with the Commission the statement described in Section 73.3580(h) of the Rules. We have no evidence that Wyoming published the required notice. To remedy this deficiency, Wyoming will be required to publish local notice of its application, if it has not already done so, and to file a statement of publication with the presiding Administrative Law Judge.

4. The respective proposals, although for different communities, would serve substantial areas in common. Consequently, in addition to determining, pursuant to Section 307(b) of the Communications Act of 1934, as amended, which of the proposals would better provide a fair, efficient and equitable distribution of radio service, a contingent comparative issue will also be specified.

5. The applicants are qualified to construct and operate as proposed. However, since the proposals are mutually exclusive, they must be designated for hearing in a consolidated proceeding on the issues specified below.

6. Accordingly, it is ordered, That, pursuant to Section 309(e) of the Communications Act of 1934, as amended, the applications are designated for hearing in a consolidated proceeding, at a time and place to be specified in a subsequent Order, upon the following issues:

1. To determine the areas and populations which would receive primary aural service (1 mV/m or greater in the case of FM) from the proposed operation of the applicants and the availability of other primary service to such areas and populations.

2. To determine, in the light of Section 307(b) of the Communications Act of 1934, as amended, which of the proposals would better provide a fair, efficient and equitable distribution of radio service.

3. To determine, in the event it is concluded that a choice between the applications should not be based solely on considerations relating to Section 307(b), which of the proposals would, on a comparative basis, better serve the public interest.

4. To determine, in the light of the evidence adduced pursuant to the foregoing issues, which if either, of the applications should be granted.

7. It is further ordered, That the petition for leave to amend filed by Fork is granted, and the corresponding amendment is accepted.

3. It is further ordered, That the petition for waiver of Section 73.207(a) filed by Fork is granted.

9. It is further ordered, That Wyoming file a statement of publication of local notice with the presiding Administrative Law Judge, as described in Section 73.3580(h) of the Rules.

10. It is further ordered, That, to avail themselves of the opportunity to be heard, the applicants herein shall, pursuant to Section 1.221(c) of the Commission's Rules, in person or by attorney, within 20 days of the mailing of this Order, file with the Commission in triplicate a written appearance stating an intention to appear on the date fixed for the hearing and to present evidence on the issues specified in this Order.

11. It is further ordered, That the applicants herein shall, pursuant to Section 311(a)(2) of the Communications Act of 1934, as amended, and Section 73.3594(g) of the Commission's Rules, give notice of the hearing (either individually or, if feasible and consistent with the Rules, jointly) within the time and in the manner prescribed in such Rule, and shall advise the Commission of the publication of such notice as required by Section 73.3594(g) of the Rules.

Federal Communications Commission.

Jerold L. Jacobs,

Chief, Broadcast Facilities Division.

[FR Doc. 80-29556 Filed 9-23-80; 8:45 am]

BILLING CODE 6712-01-M

[BC Docket No. 80-452, File No. BPH-790730AK; 80-453, File No. BPH-790226AH]

Mighty-Mac Broadcasting Co. and Maumee Valley Broadcasting Association; Designating Applications for Consolidated Hearing on Stated Issues

Hearing Designation Order

Adopted: August 22, 1980.

Released: September 18, 1980.

In re Application of Mighty-Mac Broadcasting Company, St. Ignace, Michigan, Req: 102.9 MHz, Channel 275C 100 kW (H&V), 375 feet and Maumee Valley Broadcasting Association, St. Ignace, Michigan, Req: 102.9 MHz, Channel 275C 100 kW (H&V), 300 feet for a construction permit for a new FM station.

1. The Commission, by the Chief, Broadcast Bureau, acting pursuant to delegated authority, has under consideration the above-captioned mutually exclusive applications of Mighty-Mac Broadcasting Company (Mighty-Mac) and Maumee Valley Broadcasting Association (Maumee) for a construction permit for a new FM Station.

2. *Mighty-Mac.* Mighty-Mac's public notice of its amended application stated that a copy of the application was available for public inspection at its owned station, WIDG, St. Ignace, Michigan. Maumee claimed that its business manager visited WIDG's offices on October 12, 1979 for the purpose of inspecting the application, but that no public file existed at the station at that time. An appropriate

issue based on Section 73.3526 of our Rules will be specified since Mighty-Mac has failed to deny Maumee's allegation.

3. *Other issues.* Data submitted by the applicants indicate that there would be a significant difference in the size of the areas and populations which would receive service from the proposals. Consequently, for the purpose of comparsion, the areas and populations which would receive FM service of 1 mV/m or greater strength, together with the availability of other primary aural services in such areas, will be considered under the standard comparative issue, for the purpose of determining whether a comparative preference should accrue to either of the applicants.

4. Except as indicated by the issue specified below, the applicants are qualified to construct and operate as proposed. However, since the proposals are mutually exclusive, they must be designated for hearing in a consolidated proceeding on the issues specified below.

5. Accordingly, it is ordered, That pursuant to Section 309(e) of the Communications Act of 1934, as amended, the applications are designated for hearing in a consolidated proceeding, at a time and place to be specified in a subsequent Order, upon the following issues:

1. To determine whether Mighty-Mac Broadcasting Company violated Section 73.3526 of the Commission's Rules and, if so, the effect thereof upon the applicant's basic and/or comparative qualifications.

2. To determine which of the proposals would, on a comparative basis, better serve the public interest.

3. To determine, in light of the evidence adduced pursuant to the foregoing issues, which of the applications should be granted.

6. It is further ordered, That, to avail themselves of the opportunity to be heard, the applicants herein shall, pursuant to Section 1.221(c) of the Commission's Rules, in person or by attorney, within 20 days of the mailing of this Order, file with the Commission in triplicate a written appearance stating an intention to appear on the date fixed for the hearing and to present evidence on the issues specified in this Order.

7. It is further ordered, That the applicants herein shall, pursuant to Section 311(a)(2) of the Communications Act of 1934, as amended, and Section 73.3594(g) of the Commission's Rules, give notice of the hearing (either individually or, if feasible and consistent with the Rules, jointly) within the time and in the manner prescribed in such Rule, and shall advise the Commission of the publication of such notice as required by Section 73.3594(g) of the Rules.

Federal Communications Commission.

Jerold L. Jacobs,

Chief, Broadcast Facilities Division.

[FR Doc. 80-29559 Filed 9-23-80; 8:45 am]

BILLING CODE 6712-01-M

[BC Docket No. 80-529, File No. BPED-781208AA; BC Docket No. 80-530, File No. BPED-790214AE]

Murray State University and Western Kentucky University; Designating Applications for Consolidated Hearing on Stated Issues

Hearing Designation Order

Adopted: August 19, 1980.

Released: September 17, 1980.

In re Applications of Murray State University, Henderson, Kentucky, Req: 89.5 MHz, Channel 208 22 kw (H&V), 37.25 feet and Western Kentucky University, Owensboro, Kentucky, Req: 89.5 MHz, Channel 208 100 kw (H&V), 300 feet for construction permit for a new noncommercial FM station.

1. The Commission, by the Chief Broadcast Bureau, acting pursuant to delegated authority, has under consideration the above-captioned mutually exclusive applications filed by Murray State University (Murray) and Western Kentucky University (Kentucky).

2. *Murray.* Applicants for new broadcast stations are required by Section 73.3580(f) of the Commission's rules to give local notice of the filing of their applications. They must then file with the Commission the statement described in Section 73.3580(h) of the Rules. We have no evidence that Murray published the required notice. To remedy this deficiency, Murray will be required to publish local notice of its application and to file a statement of publication with the presiding Administrative Law Judge.

3. Both applicants rely on funding from NTIA to finance portions of their proposals.[1] Since both applicants are funded by the State of Kentucky and since NTIA will not award a grant until assured by the Commission that a grant is imminent, we will assume for the purposes of this hearing that both applicants are financially qualified.

4. The respective proposals, although for different communities, would serve substantial areas in common. Consequently, in addition to determining pursuant to Section 307(b) of the Communications Act of 1934, as amended, which of the proposals would better provide a fair, efficient and equitable distribution of radio service, a contingent comparative issue will also be specified.

5. The applicants are qualified to construct and operate as proposed. However, since the proposals are mutually exclusive, they must be designated for hearing in a consolidated proceeding on the issues specified below.

6. Accordingly, it is ordered, That, pursuant to Section 309(e) of the Communications Act of 1934, as amended, the applications are designated for hearing in a consolidated proceeding, at a time and place to be specified in a subsequent Order, upon the following issues:

1. To determine the number of other reserved channel noncommercial educational FM services available in the proposed service area of each applicant, and the area and population served thereby.

2. To determine whether a share-time arrangement between the applicants would result in the most effective use of the channel and thus better serve the public interest, and, if so, the terms and conditions thereof.

3. To determine, in the light of Section 307(b) of the Communications Act of 1934, as amended, which of the proposals would better provide a fair, efficient and equitable distribution of radio service.

4. To determine, in the event it is concluded that a choice between applications should not be based solely on considerations relating to Section 307(b), the extent to which each of the proposed operations will be integrated into the overall educational operation and objectives of the respective applicants; or whether the other factors in the record demonstrate that one applicant will provide a superior FM educational broadcast service.

5. To determine, in the light of the evidence adduced pursuant to the foregoing issues, which of the applications, if either, should be granted.

7. It is further ordered, That Murray State University file a statement of publication with the presiding Administrative Law Judge as described in §73.3580(h) of the Rules.

8. It is further ordered, That, to avail themselves of the opportunity to be heard, the applicants herein shall, pursuant to § 1.221(c) of the Commission's Rules, in person or by attorney, within 20 days of the mailing

[1] The National Telecommunications and Information Administration (NTIA) of the U.S. Department of Commerce adminsters a grant program under the Public Telecommunications Financing Act of 1978, Pub. L. 95-567, 92 Stat. 2405.

of this Order, file with the Commission in triplicate a written appearance stating an intention to appear on the date fixed for the hearing and to present evidence on the issues specified in this Order.

9. It is further ordered, That the applicants herein shall, pursuant to Section 311(a)(2) of the Communications Act of 1934, as amended, and § 73.3594(g) of the Commission's Rules, give notice of the hearing (either individually or, if feasible and consistent with the Rules, jointly) within the time and in the manner prescribed in such Rule, and shall advise the Commission of the publication of such notice as required by § 73.3594(g) of the Rules.

Federal Communications Commission.

Jerold L. Jacobs,

Chief, Broadcast Facilities Division.

[FR Doc. 80-29555 Filed 9-23-80; 8:45 am]

BILLING CODE 6712-01-M

[BC Docket No. 80-469, File No. BPH-790724AB; BC Docket No. 80-470; File No. BPH-790831AI]

Ralin Broadcasting Corp. and Radio Del Ray, Inc.; Designating Applications for Consolidated Hearing on Stated Issues

Hearing Designation Order

Adopted: August 26, 1980.

Released: September 17, 1980.

In re Applications of Ralin Broadcasting Corporation King City, California, Req: 92.1 MHz, Channel 221, 3 kW (H&V), minus 60 feet and Radio Del Rey, Inc. King City, California, Req: 92.1 MHz, Channel 221 3 kW (H&V), minus 310 feet For Construction Permit for a New FM Station.

1. The Commission, by the Chief, Broadcast Bureau, acting pursuant to delegated authority, has under consideration the above-captioned mutually exclusive applications.

2. Data submitted by the applicants indicate that there would be a significant difference in the size of the areas and populations which would receive service from the proposals. Consequently, for the purpose of comparison, the areas and populations which would receive FM service of 1 mV/m or greater intensity, together with the availability of other primary aural services in such areas, will be considered under the standard comparative issue, for the purpose of determining whether a comparative preference should accrue to either of the applicants.

3. The applicants are qualified to construct and operate as proposed. However, since the proposals are mutually exclusive, they must be designated for hearing in a consolidated proceeding on the issues specified below.

4. Accordingly, it is ordered, That, pursuant to Section 309(e) of the Communications Act of 1934, as amended, the applications are designated for hearing in a consolidated proceeding, at a time and place to be specified in a subsequent Order, upon the following issues:

1. To determine which of the proposals would, on a comparative basis, better serve the public interest.

2. To determine, in the light of the evidence adduced pursuant to the foregoing issue, which of the applications should be granted.

5. It is further ordered, That in the event the application of Radio Del Rey is granted, it is subject to the condition that if the Commission ultimately adopts a rule prohibiting commonly owned AM and FM stations in the same market, Radio Del Rey will divest itself of either its AM station or FM station in accordance with the requirements established in such rulemaking proceeding.

6. It is further ordered, That, to avail themselves of the opportunity to be heard, the applicants herein shall, pursuant to Section 1.221(c) of the Commission's Rules, in person or by attorney, within 20 days of the mailing of this Order, file with the Commission in triplicate a written appearance stating an intention to appear on the date fixed for the hearing and to present evidence on the issues specified in this Order.

7. It is further ordered, That the applicants herein shall, pursuant to section 311(a)(2) of the Communications Act of 1934, as amended, and § 73.3594(g) of the Commission's Rules, give notice of the hearing (either individually or, if feasible and consistent with the Rules, jointly) within the time and in the manner prescribed in such Rule, and shall advise the Commission of the publication of such notice as required by § 73.3594(g) of the Rules.

Federal Communications Commission.

Jerold L. Jacobs

Chief, Broadcast Facilities Division Broadcast Bureau.

[FR Doc. 80-29554 Filed 9-23-80; 8:45 am]

BILLING CODE 6712-01-M

[BC Docket No. 80-462, File No. BPET-790720KE; 80-463, File No. BPCT-791026KL; 80-464, File No. BPCT-791026KM]

Tacoma School District No. 10, et al.; Designating Applications for Consolidated Hearing on Stated Issues

Hearing Designation Order

Adopted: August 28, 1980.

Released: September 22, 1980.

In re Applications of Tacoma School District No. 10, Tacoma, Washington, Family Broadcasting Company, Tacoma, Washington, and Tacoma Community Television, Inc., Tacoma, Washington for construction permit.

By the Chief, Broadcast Bureau:

1. The Commission, by the Chief, Broadcast Bureau, acting pursuant to delegated authority, has before it the above-captioned mutually exclusive applications. Family Broadcasting Company (Family) and Tacoma Community Television, Inc. (TCTV) are applying for authority to construct a new commercial television broadcast station on Channel 20, Tacoma, Washington. Tacoma School District No. 10 (Tacoma School), a noncommercial educational station presently operating on Channel 62, Tacoma, Washington, is applying for a major change, to operate on Channel 20, Tacoma, Washington.[1] An informal objection to the grant of Family's application was filed by Dr. G. James Kenney and Mary A. Kenney.

2. Family proposes operation from a transmitter located within 250 miles of the Canadian border, with effective radiated visual power (ERP) exceeding 1000 kW. This proposal requires Canadian concurrence. Therefore, any construction permit granted to Family in this proceeding will be conditioned to preclude station operation in excess of 1000 kW ERP pending Canadian consent.

3. *Family Broadcasting Company.* An informal objection to this application was filed on November 28, 1979, by Dr. G. James Kenney and Mary A. Kenney. Objectors allege that applicant would not comply with the requirements of the fairness doctrine[2] due to their religious

[1] Tacoma School and Family are awaiting FAA clearance for their antenna proposals. If during the hearing the FAA advises that either or both proposals constitute an air hazard, the Administrative Law Judge is authorized to specify an issue or issues against the appropriate applicant(s). If either Family or Tacoma School is chosen as the applicant which would best serve the public interest, and this determination is made before the FAA study is completed, the construction permit shall be conditioned to require FAA approval prior to construction.

[2] The fairness doctrine imposes two affirmative responsibilities on the broadcaster: coverage of

Footnotes continued on next page

beliefs. However, Family specifically states in its application that it will comply with the fairness doctrine: "Qualified and responsible spokesman will be sought for diverse opinions on public issues." In light of the applicant's announced intention to comply with the fairness doctrine we find that the objector has failed to raise a substantial and material question of fact. Accordingly, no issue will be specified to inquire into this matter, and, pursuant to Section 309(d)(2) of the Communications Act of 1934, as amended, the Kenneys' informal objection will be denied.

4. *Tacoma Community Television, Inc.* TCTV is a wholly-owned subsidiary of Entertainment Communications, Inc. (ECI), which is the sole stockholder of Entertainment Communications, Inc. (Washington), licensee of Stations KTAC and KBRD(FM), Tacoma, Washington. If TCTV's application were granted, the predicted Grade A contour of its proposed station would completely encompass the community of license of KTAC and KBRD(FM). See Section 73.636(a)(1) of the Rules, 47 C.F.R. 73.636(a)(1).[3] However, ECI has agreed to divest itself of all interest in both radio stations upon grant of a construction permit for its proposed television station. Accordingly, no issue will be specified, but any grant of TCTV's construction permit will be conditioned on divestiture of ECI's interests in KTAC and KBRD(FM).

5. Except as indicated by the issues specified below, the applicants are qualified to construct and operate as proposed. However, since the proposals are mutually exclusive, they must be designated for hearing in a consolidated proceeding on the issues specified below.

6. Accordingly, it is ordered, That, pursuant to Section 309(e) of the Communications Act of 1934, as amended, the applications are designated for hearing in a consolidated proceeding, at a time and place before an Administrative Law Judge to be specified in a subsequent Order, upon the following issues:

1. To determine which of the proposals would, on a comparative basis, best serve the public interest.

2. To determine, in the light of the evidence adduced pursuant to the foregoing issue, which of the applications should be granted.

7. It is further ordered, That the informal objection filed by Dr. and Mrs. G. James Kearney on November 28, 1979, IS DENIED.

8. It is further ordered, That in the event of a grant of the application of Family Broadcasting Company the construction permit shall contain the following condition:

Operation with effective radiated power in excess of 1000 kW shall not commence without the consent of Canada.

9. It is further ordered, That in the event that Tacoma Community Television, Inc.'s application is granted, operation of the station shall not be commenced until ECI has divested all of its interest in and connection with Stations KTAC and KBRD(FM), Tacoma, Washington.

10. It is further ordered, That, to avail themselves of the opportunity to be heard, the applicants herein shall, pursuant to § 1.221(c) of the Commission's Rules, in person or by attorney, within 20 days of the mailing of this Order, file with the Commission in triplicate a written appearance stating an intention to appear on the date fixed for the hearing and to present evidence on the issues specified in this Order.

11. It is further ordered, That the applicants herein shall, pursuant to section 311(a)(2) of the Communications Act of 1934, as amended, and § 73.3594 of the Commission's Rules, give notice of the hearing (either individually or, if feasible and consistent with the Rules, jointly) within the time and in the manner prescribed in such Rule, and shall advise the Commission of the publication of such notice as required by § 73.3594(g) of the Rules.

Federal Communications Commission.

Jerold L. Jacobs,

Chief, Broadcast Facilities Division.

[FR Doc. 80-29562 Filed 9-23-80; 8:45 am]

BILLING CODE 6712-01-M

Footnotes continued from last page

controversial issues of public importance must be adequate and must fairly reflect differing viewpoints. *CBS v. Democratic National Committee*, 412 U.S. 94, 111 (1973).

[3] Section 73.636(a)(1) sets forth a policy against granting television construction permits to applicants who directly or indirectly own, operate or control a radio station licensed to a community which is completely encompassed by the predicted Grade A contour of their proposed television station. Note 8 to this rule provides, *inter alia*, that applications for UHF television facilities ". . . will be handled on a case-by-case basis in order to determine whether common ownership, operation, or control of the stations in question would be in the public interest."

[BC Docket No. 80-454, File No. BPCT-780720IA; 80-455, File No. BPCT-790507KM]

TV-8, Inc. and Bluegrass Media, Inc.; Designating Applications for Consolidated Hearing on Stated Issues

Adopted: August 25, 1980.

Released: September 18, 1980.

In re applications of TV-8, Inc., Somerset, Kentucky, and Bluegrass Media, Inc., Somerset, Kentucky for construction permit for a new television station.

By the Chief, Broadcast Bureau:

1. The Commission, by the Chief, Broadcast Bureau, acting pursuant to delegated authority, has before it the above-captioned mutually exclusive applications for authority to construct a new commercial television broadcast station on Channel 16, Somerset, Kentucky.

2. The predicted Grade A contour of TV-8, Inc.'s (TV-8) proposed television station completely encompasses the community of license of WTLO(AM), Somerset, Kentucky, licensed to Cumberland Communications, Inc. (Cumberland). James A. Brown, Vice-President and 16% shareholder of TV-8, holds 25% interest in and is President of Cumberland. E. R. Taylor, President of TV-8, holds 25% interest in Cumberland. T. B. Grissom, a Director of TV-8, is Secretary and a 25% shareholder of Cumberland. H. Rakestraw, Jr., a Director of TV-8, also holds 25% interest in Cumberland. Section 73.636(a)(1) of the Rules, 47 CFR 73.636(a)(1) (the "one-to-a-market" rule), sets forth a policy against granting television construction permits to applicants who directly or indirectly own, operate, or control a radio station licensed to a community which is completely encompassed by the predicted Grade A contour of their proposed television station. Note 8 to this rule provides, *inter alia*, that applications for UHF television facilities ". . . will be handled on a case-by-case basis in order to determine whether common ownership, operation, or control of the stations in question would be in the public interest."

Accordingly, an appropriate issue will be specified to determine whether common ownership of WTLO(AM) and TV-8's proposed television station would be consistent with the public interest.[1]

3. Bluegrass Media, Inc. proposes to operate as a "satellite" station of WBKO(TV), Bowling Green, Kentucky. Accordingly, an issue will be specified

---

[1] H. Rakestraw, Jr., T. B. Grissom and E. R. Taylor also are stockholders in Burnside CATV Corporation (Burnside), Somerset, Kentucky, and Burnside is a principal stockholder in TV-8, Inc. Rakestraw, Grissom and Taylor have certified that, as principals of Burnside, they will assign ownership of Burnside's TV-8 stock to themselves and divest themselves completely of all stock in Burnside upon the issuance to TV-8, Inc. of a construction permit for Channel 16, Somerset, Kentucky. Accordingly, any grant to TV-8, Inc. will be appropriately conditioned.

with respect to the need for satellite operation.[2]

4. Except as indicated by the issues specified below, the applicants are qualified to construct and operate as proposed. However, since the proposals are mutually exclusive, they must be designated for hearing in a consolidated proceeding on the issues specified below.

5. Accordingly, it is ordered, That, pursuant to Section 309(e) of the Communications Act of 1934, as amended, the applications are designated for hearing in a consolidated proceeding, at a time and place to be specified in a subsequent Order, upon the following issues:

(1) To determine whether common ownership, operation or control of Station WTLO(AM) and TV-8, Inc.'s proposed television station would be in the public interest.

(2) To determine whether circumstances exist which would make operation as a "satellite" necessary for Somerset, Kentucky.

(3) To determine which of the proposals would, on a comparative basis, better serve the public interest.

(4) To determine, in the light of the evidence adduced pursuant to the foregoing issues, which of the applications, if either, should be granted.

6. It is further ordered, That any grant to TV-8, Inc. shall be conditioned upon the divestiture of Burnside CATV Corporation's interest in TV-8, Inc. and the divestiture of H. Rakestraw, Jr., T. B. Grissom and E. R. Taylor's interest in Burnside CATV Corporation.

7. It is further ordered, That, to avail themselves of the opportunity to be heard, the applicants herein shall, pursuant to section 1.221(c) of the Commission's Rules, in person or by attorney, within 20 days of the mailing of this Order, file with the Commission in triplicate a written appearance stating an intention to appear on the date fixed for the hearing and to present evidence on the issues specified in this Order.

8. It is further ordered, That the applicants herein shall, pursuant to section 311(a)(2) of the Communications Act of 1934, as amended, and § 73.3594 of the Commission's Rules, give notice of the hearing (either individually or, if feasible and consistent with the Rules, jointly) within the time and in the manner prescribed in such Rule, and shall advise the Commission of the publication of such notice as required by § 73.3594(g) of the Rules.

Federal Communications Commission.

Jerold L. Jacobs,

Chief, Broadcast Facilities Division, Broadcast Bureau.

[FR Doc. 80-29557 Filed 9-23-80; 8:45 am]

BILLING CODE 6712-01-M

[2] Applicants who propose satellite operation must justify the need for a "satellite." *Newhouse Broadcasting Corporation*, FCC 80-157, 77 FCC 2d 97 (1980). *See also Multiple Ownership Rules*, Docket No. 14711, 3 RR 2d 1554, 1563 (1964), wherein we said: We shall require all applicants proposing [satellite] operations to make a showing as to why the satellite form of operation is necessary for the community for which they are applying.

[Report No. 1249]

Petitions for Reconsideration of Actions in Rule Making Proceedings

September 18, 1980.

The following listings of petitions for reconsideration filed in Commission rulemaking proceedings is published pursuant to 47 CFR § 1.429(e). Oppositions to such petitions for reconsideration must be filed within 15 days after publication of this Public Notice in the **Federal Register.** Replies to an opposition must be filed within 10 days after the time for filing oppositions has expired.

Subject: Interference from Spark-Type Ignition Systems in Motor Vehicles. (Docket No. 20654)

Filed by: Ernest W. Jennes & J. Geoffrey Bentley, Attorneys for Association of Maximum Service Telecasters, Inc. on 8-11-80.

Subject: Amendment of Sections 73.202(b), Table of Assignments, FM Broadcast Stations (Mt. Vernon, Ohio). (BC Docket No. 80-22, RM-3286)

Filed by: Thomas Schattenfield & Susan A. Marshall, Attorneys for Mt. Vernon Broadcasting Company (WMVO-AM-FM) on 9-10-80.

Federal Communications Commission.

William J. Tricarico,

Secretary.

[FR Doc. 80-29560 Filed 9-23-80; 8:45 am]

BILLING CODE 6712-01-M

[Report No. B-12]

TV Broadcast Applications Accepted For Filing and Notification of Cut-Off Date

Released: September 18, 1980.

Cutoff date: October 31, 1980.

Notice is hereby given that the applications listed in the attached appendix are accepted for filing. Because the applications listed in the attached appendix are in conflict with applications which were accepted for filing and listed previously as subject to a cut-off date for conflicting applications, no application which would be in conflict with any application listed in the attached appendix will be accepted for filing.

Petitions to deny the applications listed in the attached appendix and minor amendments thereto must be on file with the Commission not later than the close of business on October 31, 1980. Any application previously accepted for filing and in conflict with any application listed in the attached appendix may also be amended as a matter of right not later than the close of business on October 31, 1980. Amendments filed pursuant to this notice are subject to the provisions of Section 73.3572(b) of the Commission's Rules.

Federal Communications Commission.

William J. Tricarico,

Secretary.

BPCT-800721KO (New), New Orleans, Louisiana, Comark Television, Inc., Channel 38, ERP: Vis. 517 kW; HAAT: 458 feet

BPCT-800721KN (New), New Orleans, Louisiana, National Group Telecommunications, Inc., Channel 38, ERP: Vis. 2742 kW; HAAT: 632 feet

BPCT-800721KL (New), New Orleans, Louisiana, Delta Media, Ltd., Channel 38, ERP: Vis. 1561 kW; HAAT: 595 feet

BPCT-800721KM (New), New Orleans, Louisiana, Cypress Broadcasting Limited Partnership, Channel 38, ERP: Vis. 5000 kW; HAAT: 1019 feet

BPCT-800721KH (New), Portland, Maine, Comark Television, Inc., Channel 51, ERP: Vis. 3881 kW; HAAT: 628 feet

BPCT-800721KI (New), Portland, Maine, Greater Portland Telecasting, Inc., Channel 51, ERP: Vis. 1279 kW; HAAT: 1032 feet

BPCT-800618KG (New), New Bedford, Massachusetts, Filmways Television Broadcasting, Inc., Channel 28, ERP: Vis. 1000 kW; HAAT: 1000 feet

BPCT-800618KH (New), New Bedford, Massachusetts, Manning Telecasting, Inc., Channel 28, ERP: Vis. 5000 kW; HAAT: 1056 feet

BPCT-800721KG (New), Charleston, West Virginia, West Virginia Telecasting, Inc., Channel 23, ERP: Vis. 5000 kW; HAAT: 1722 feet

BPCT-800721KF (New), Concord, New Hampshire, NH Channel 21 Limited Partnership, Channel 21, ERP: Vis. 1845 kW; HAAT: 1133 feet

BPCT-800721KK (New), El Paso, Texas, Paso del Norte Broadcasting Corporation, Channel 26, ERP: Vis. 2761 kW; HAAT: 1527 feet

BPCT-800618KI (New), San Angelo, Texas, Morton Telecasting, Inc., Channel 6, ERP: Vis. 100 kW; HAAT: 1051 feet

[FR Doc. 80-29548 Filed 9-23-80; 8:45 am]

BILLING CODE 6712-01-M

FEDERAL MARITIME COMMISSION

Agreements Filed

The Federal Maritime Commission hereby gives notice that the following agreements have been filed with the Commission for approval pursuant to section 15 of the Shipping Act, 1916, as amended (39 Stat. 733, 75 Stat. 763, 46 U.S.C. 814).

Interested parties may inspect and obtain a copy of each of the agreements and the justifications offered therefor at the Washington Office of the Federal Maritime Commission, 1100 L Street, N.W., Room 10218; or may inspect the agreements at the Field Offices located at New York, N.Y.; New Orleans, Louisiana; San Francisco, California; Chicago, Illinois; and San Juan, Puerto Rico. Interested parties may submit comments on each agreement, including requests for hearing, to the Secretary, Federal Maritime Commission, Washington, D.C. 20573, on or before October 14, 1980. Comments should include facts and arguments concerning the approval, modification, or disapproval of the proposed agreement. Comments shall discuss with particularity allegations that the agreement is unjustly discriminatory or unfair as between carriers, shippers, exporters, importers, or ports, or between exporters from the United States and their foreign competitors, or operates to the detriment of the commerce of the United States, or is contrary to the public interest, or is in violation of the Act.

A copy of any comments should also be forwarded to the party filing the agreements and the statement should indicate that this has been done.

Agreement No. T-2745-1.

Filing party: Eugene D. Gulland, Covington & Burling, 888 Sixteenth Street, N.W., Washington, D.C. 20006.

Summary: Agreement No. T-2745-1, between Canton Company of Baltimore (and its subsidiaries—Canton Railroad Company and The Cottman Company) (Lessor), and the Transamerican Trailer Transport Inc. (TTT) (now known as Puerto Rico Marine Management, Inc.), provides for the lease to TTT of Pier 10 and two parcels of improved inland areas at Canton, Baltimore Harbor, for use as a waterfront shipping terminal, trucking and rail freight handling, and forwarding terminal and uses incidental thereto. Due to condemnation proceeding by the City of Baltimore of certain portions of the leased property under the original agreement, Agreement No. T-2745-1 was filed to (1) delete from the leased property that which has been condemned; (2) provide for the rental of adjacent substitute property and for certain construction and improvement work to be performed on such property; and (3) adjust the rental payments to indicate the changed circumstances occasioned by the condemnation as indicated in the agreement.

Agreement No. T-2827-2.

Filing party: Edward D. Ransom, Esquire, Lillick, McHose & Charles, Two Embarcadero Center, San Francisco, California 94111.

Summary: Agreement No. T-2827-2, between Encinal Terminals (Encinal) and Crescent Wharf and Warehouse Company (Crescent), modifies the parties' basic agreement providing for Crescent's lease of certain property at Alameda, California, to be operated as a public marine terminal. The purpose of the modification is to amend payment provisions of rent by Crescent to Encinal. The parties herein agree that Encinal shall receive an annual minimal rental of $35,000 and maximum of $700,000. Crescent shall retain 50 percent of all monies in excess of $700,000 up to the amount of $200,000. Thereafter, all monies shall be paid to Encinal in accordance with stated provisions in this agreement. The parties further agree to terms relating to delinquent payments and methods of payment provided for in this agreement.

Agreement No. T-3104-3.

Filing party: Marion S. Moore, Jr., Traffic Manager, South Carolina State Ports, Authority, P.O. Box 817, Charleston, South Carolina 29402.

Summary: Agreement No. T-3104-3, between South Carolina State Port Authority (Authority) and United States Lines, Inc. (USL), modifies the basic agreement between the parties which provide for USL's 5-year lease (with options to renew) of certain improved terminal facilities and preferential use of Berth No. 1 at the Authority's Columbus Street Terminal in Charleston, South Carolina. The purpose of this modification is to provide for an increase in the area available to USL for the handling and storage of containers with a corresponding increase of $6,375.23 in the fixed monthly rental charge.

Agreement No. 10320-3.

Filing party: Hopewell H. Darneille, III, Equire, Sullivan & Beauregard, 1800 M Street, N.W., Washington, D.C. 20036.

Summary: Agreement No. 10320-3 among the members of the Brazil/U.S. Gulf Coast Ports Pool Agreement acknowledges the withdrawal of Navimex, S.A. de C.V. from the underlying conference and adjusts pool shares to provide 4.7 percent as the pool share to be awarded to Transportation Maritima Mexicana, S.A. (TMM) as of October 1, 1980, or upon approval of relevant governmental authorities, whichever is later, provided TMM adheres to Agreement No. 10320-3.

By Order of the Federal Maritime Commission.

Dated: September 18, 1980.

Joseph C. Polking,

Assistant Secretary.

[FR Doc. 80-29474 Filed 9-23-80; 8:45 am]

BILLING CODE 6730-01-M

Independent Ocean Freight Forwarder License Applicants; Temple Forwarding Co., et al.

Notice is hereby given that the following applicants have filed with the Federal Maritime Commission applications for licenses as independent ocean freight forwarders pursuant to section 44(a) of the Shipping Act, 1916 (75 Stat. 522 and U.S.C. 841(c)).

Persons knowing of any reason why any of the following applicants should not receive a license are requested to communicate with the Director, Bureau of Certification and Licensing, Federal Maritime Commission, Washington, D.C. 20573.

Temple Forwarding Co. (Myrtis M. Marks, dba), 316 40th Street, New Orleans, LA 70124

Jack E. Ryan dba Ryan and Company, P.O. Box 61406, Dallas/Ft. Worth Airport, Texas 75261

Ocean Shipping International, Inc., 1915 Huguenot Rd., Richmond, VA 23235. Officers: Jorgen E. Agger, President/Treasurer, Tove Agger, Vice President/Secretary, Linda F. Norman, Vice President

Commodity Forwarders, Inc., 210 Baronne St., New Orleans, LA 70112. Officers: Lawrence D. McCall, President, Pauline M. McCall, Secretary/Treasurer

By the Federal Maritime Commission.

Dated: September 19, 1980.

Joseph C. Polking,

Assistant Secretary.

[FR Doc. 80-29582 Filed 9-23-80; 8:45 am]

BILLING CODE 6730-01-M

[Docket No. 80-65]

Daniel F. Young, Inc.; Independent Ocean Freight Forwarder License No. 656; Order of Investigation and Hearing

Daniel F. Young, Inc. (DFY) is an independent ocean freight forwarder operating pursuant to FMC License No. 656, issued on October 30, 1964. Information has been developed by the Commission's staff which indicates that DFY may have violated sections 15 and 16, Initial Paragraph, of the Shipping Act, 1916 (46 U.S.C. 814, 815). DFY's actions may have rendered it unfit to carry on the business of forwarding pursuant to section 44(b) of the Shipping Act, 1916 (46 U.S.C. 841(b)).

The information indicates DFY and/or its officers received sums of money from ocean carriers in excess of the ocean freight forwarder compensation specified in the ocean carriers' tariffs. Payments from one carrier to the president of DFY totalled approximately $12,539 for the period from November 19, 1975 through October 22, 1976, for shipments whereon DFY acted as the

ocean freight forwarder. Payments received by DFY from another carrier totalled approximately $156,000 for the period September 22, 1975 through January 27, 1977. These payments were all in excess of the ocean freight forwarder compensation specified in the carriers' applicable tariffs.

The receipt of payments from ocean carriers in excess of the tariffed ocean freight forwarder compensation by DFY and/or its officers raises the possibility that DFY violated section 15 and section 16, Initial Paragraph, of the Shipping Act, 1916. Section 15 would have been violated if the payments were made pursuant to an unfiled agreement between DFY and the respective carriers. DFY may have violated section 16, Initial Paragraph, by directly or indirectly passing any part of these payments through to its shipper principals and thereby permitting its principals to obtain ocean transportation at less than the applicable rates or charges. Moreover, even if DFY did not pass any or all of the payments on to its shipper clients, if the payments represent a portion of the carrier's ocean freight revenues for DFY shipments, the excess payments may result in such shipments moving at less than the applicable rates and charges.

Now, therefore, it is ordered, That pursuant to sections 15, 16, 22, 32, and 44 (46 U.S.C. 814, 815, 821, 831 and 841(b)) of the Shipping Act, 1916, and § 510.9 of General Order 4 (46 CFR 510.9), a proceeding is hereby instituted to determine:

1. Whether DFY violated section 15 of the Shipping Act, 1916, by entering into and carrying out without Commission approval any agreement providing for the receipt of payments from ocean carriers in excess of the amount of ocean freight forwarder compensation specified in the ocean carriers' applicable tariffs;

2. Whether DFY violated section 16, Initial Paragraph, of the Shipping Act, 1916, by directly or indirectly passing on any portion of monies received by it or its officers from ocean carriers in excess of authorized ocean freight forwarder compensation to its shipper principals thus obtaining ocean tranportation—on behalf of its principals—at less than the applicable rates or charges;

3. Whether DFY violated section 16, Initial Paragraph of the Shipping Act, 1916—even if it did not pass any or all of monies received by it or its officers from ocean carriers in excess of authorized ocean freight forwarder compensation to its shipper principals—by obtaining transportation by water at less than the applicable rates and charges;

4. Whether civil penalties should be assessed against DFY pursuant to section 32(e) of the Shipping Act, 1916, for violations of the Shipping Act, 1916, and/or the Commission's Rules and Regulations, and, if so, the amount of any such penalty which should be imposed;

5. Whether DFY's independent ocean freight forwarder license should be suspended or revoked pursuant to section 44(d) of the Shipping Act, 1916:

(a) if the investigation shows that DFY engaged in wilful violations of sections 15 and 16 of the Shipping Act, 1916; or

(b) if the Commission finds that the conduct described in Paragraphs 1–3 hereof has occurred and, though not violative of sections 15 and 16 of the Act, is conduct which renders DFY unfit to carry on the business of forwarding in accordance with section 510.9(e) of General Order 4.

It is further ordered, That Daniel F. Young, Inc. be named Respondent in this proceeding.

It is further ordered, That this proceeding be assigned for public hearing before an Administrative Law Judge of the Commission's Office of Administrative Law Judges and that the hearing be held at a date and place to be determined by the Presiding Administrative Law Judge, but in any event, shall commence within the time limits specified in Rule 61 (46 CFR 502.61) of the Commission's Rules or Practice and Procedure. The hearing shall include oral testimony and cross-examination in the discretion of the Presiding Officer only upon a proper showing that there are genuine issues of material fact that cannot be resolved on the basis of sworn statements, affidavits, depositions, or other documents, or that the nature of the matters in issue are such that an oral hearing and cross-examination are necessary for the development of an adequate record.

It is further ordered, That in accordance with Rule 42 of the Commission's Rules of Practice and Procedure (46 CFR 502.42), the Commission's Bureau of Hearing Counsel shall be a party to this proceeding.

It is further ordered, That notice of this Order be published in the **Federal Register** and a copy thereof and notice of hearing be served upon Respondent, Daniel F. Young, Inc. and the Commission's Bureau of Hearing Counsel.

It is further ordered, That any person other than Respondent and Hearing Counsel having an interest and desiring to participate in this proceeding shall file a petition for leave to intervene in accordance with Rule 72 (46 CFR 502.72) of the Commission's Rules of Practice and Procedure.

It is further ordered, That all future notices issued by or on behalf of the Commission, including notice of time and place of hearing, or prehearing conference, shall be mailed directly to all parties of record.

By the Commission.

Joseph C. Polking,

Assistant Secretary.

[FR Doc. 80-29583 Filed 9-23-80; 8:45 am]

BILLING CODE 6730-01-M

FEDERAL RESERVE SYSTEM

Bank Holding Companies; Proposed de Novo Nonbank Activities

The bank holding companies listed in this notice have applied, pursuant to section 4(c)(8) of the Bank Holding Company Act (12 U.S.C. § 1843(c)(8)) and § 225.4(b)(1) of the Board's Regulation Y (12 CFR 225.4(b)(1)), for permission to engage *de novo* (or continue to engage in an activity earlier commenced *de novo*), directly or indirectly, solely in the activities indicated, which have been determined by the Board of Governors to be closely related to banking.

With respect to each application, interested persons may express their views on the question whether consummation of the proposal can "reasonably be expected to produce benefits to the public, such as greater convenience, increased competition, or gains in efficiency, that outweigh possible adverse effects, such as undue concentration of resources, decreased or unfair competition, conflicts of interest, or unsound banking practices." Any comment on an application that requests a hearing must include a statement of the reasons a written presentation would not suffice in lieu of a hearing, identifying specifically any questions of fact that are in dispute, summarizing the evidence that would be presented at a hearing, and indicating how the party commenting would be aggrieved by approval of that proposal.

Each application may be inspected at the offices of the Board of Governors or at the Federal Reserve Bank indicated for that application. Comments and requests for hearings should identify clearly the specific application to which they relate, and should be submitted in writing and, except as noted, received by the appropriate Federal Reserve Bank not later than October 17, 1980.

A. *Federal Reserve Bank of Richmond* (Lloyd W. Bostian, Jr., Vice President)

701 East Byrd Street, Richmond, Virginia 23261:

Maryland National Corporation, Baltimore, Maryland (commercial financing and servicing; Connecticut, Maine, Massachusetts, New Hampshire, New Jersey, New York, Pennsylvania, Rhode Island, Vermont): to engage, through its subsidiary Maryland National Industrial Finance Corporation, in commercial finance company operations, including but not limited to financing of accounts receivable, inventories, and other types of secured and unsecured loans to commercial enterprises; servicing commercial loans for affiliated or nonaffiliated individuals, partnerships, corporations and other entities; and acting as advisor or broker in commercial lending transactions. The proposed activities will be conducted from an office located in Allentown, Pennsylvania, serving the States of Connecticut, Maine, Massachusetts, New Hampshire, New Jersey, New York, Pennsylvania, Rhode Island, and Vermont.

B. *Federal Reserve Bank of Dallas* (Anthony J. Montelaro, Assistant Vice President) 400 South Akard Street, Dallas, Texas 75222:

Independent Bankshares Corporation, San Rafael, California (mortgage banking and servicing activities; Northern and Central California): to engage through its subsidiary, Independent Bankers Mortgage Corporation, in originating, selling and servicing real estate loans of all types for its own account and for the accounts of others. These activities would be conducted from an office in Santa Rosa, California, serving Northern and Central California. Comments on this application must be received by October 10, 1980.

C. *Federal Reserve Bank of San Francisco* (Harry W. Green, Vice President) 400 Sansome Street, San Francisco, California 94120:

Security Pacific Corporation, Los Angeles, California (finance and credit life and credit accident and health insurance activities; Georgia): to engage through its subsidiary Security Pacific Finance Corp. in making or acquiring for its own account or for the account of others, loans and extensions of credit, including making consumer installment personal loans, purchasing consumer installment sales finance contracts, making loans to small businesses and other extensions of credit, such as would be made by a factoring company or a consumer finance company, and acting as broker or agent for the sale of credit life and credit accident and health insurance. These activities would be conducted from an office of Security Pacific Finance Corp. located in Atlanta, Georgia, serving the State of Georgia, and would constitute a relocation of an existing office of Security Pacific Finance Corp., which is currently located at 3031 Headland Drive, S.W., Atlanta, Georgia 30311.

D. *Other Federal Reserve Banks:* None.

Board of Governors of the Federal Reserve System, September 17, 1980.

Cathy L. Petryshyn,

Assistant Secretary of the Board.

[FR Doc. 80-29567 Filed 9-23-80; 8:45 am]

BILLING CODE 6210-01-M

Lakeside Credit Co., Inc.; Proposed Retention of Insurance Activities

Lakeside Credit Co., Inc., Isle, Minnesota, has applied, pursuant to section 4(c)(8) of the Bank Holding Company Act (12 U.S.C. § 1843(c)(8)) and § 225.4(b)(2) of the Board's Regulation Y (12 CFR 225.4(b)(2)), for permission to retain its general insurance agency activities in Isle, Minnesota, a community with a population not exceeding 5,000.

Applicant states that it would continue to engage in the activities of a general insurance agency. These activities would be performed from offices of Applicant in Isle, Minnesota, and the geographic area to be served is the area within a 20 mile radius of Isle, including the counties of Mille Lacs, Kanabec and Aitkin, Minnesota. Such activities have been specified by the Board in section 225.4(a) of Regulation Y as permissible for bank holding companies, subject to Board approval of individual proposals in accordance with the procedures of section 225.4(b).

Interested persons may express their views on the question whether consummation of the proposal can "reasonably be expected to produce benefits to the public, such as greater convenience, increased competition, or gains in efficiency, that outweigh possible adverse effects, such as undue concentration of resources, decreased or unfair competition, conflicts of interests, or unsound banking practices." Any request for a hearing on this question must be accompanied by a statement of the reasons a written presentation would not suffice in lieu of a hearing, identifying specifically any questions of fact that are in dispute, summarizing the evidence that would be presented at a hearing, and indicating how the party commenting would be aggrieved by approval of the proposal.

The application may be inspected at the offices of the Board of Governors or at the Federal Reserve Bank of Minneapolis.

Any views or requests for hearing should be submitted in writing and received by the Secretary, Board of Governors of the Federal Reserve System, Washington, D.C. 20551, not later than October 17, 1980.

Board of Governors of the Federal Reserve System, September 17, 1980.

Cathy L. Petryshyn,

Assistant Secretary of the Board.

[FR Doc. 80-29570 Filed 9-23-80; 8:45 am]

BILLING CODE 6210-01-M

Plaza Management Co.; Proposed Retention of Insurance Activities

Plaza Management Company, Bartlesville, Oklahoma, has applied, pursuant to section 4(c)(8) of the Bank Holding Company Act (12 U.S.C. § 1843(c)(8)) and § 225.4(b)(2) of the Board's Regulation Y (12 CFR 225.4(b)(2)), for permission to retain its credit life, accident and health insurance business activities.

Applicant states that the proposed subsidiary would continue to provide life, accident and health insurance directly related to an extension of credit by a bank or bank related firm of the kind described in the Board's Regulation Y. These activities would be performed from offices of Applicant's subsidiary in Bartlesville, Oklahoma, and the geographic areas to be served are Washington and Osage Counties, Oklahoma. Such activities have been specified by the Board in section 225.4(a) of Regulation Y as permissible for bank holding companies, subject to Board approval of individual proposals in accordance with the procedures of section 225.4(b).

Interested persons may express their views on the question whether consummation of the proposal can "reasonably be expected to produce benefits to the public, such as greater convenience, increased competition, or gains in efficiency, that outweigh possible adverse effects, such as undue concentration of resources, decreased or unfair competition, conflicts of interests, or unsound banking practices." Any request for a hearing on this question must be accompanied by a statement of the reasons a written presentation would not suffice in lieu of a hearing, identifying specifically any questions of fact that are in dispute, summarizing the evidence that would be presented at a hearing, and indicating how the party commenting would be aggrieved by approval of the proposal.

The application may be inspected at the offices of the Board of Governors or

at the Federal Reserve Bank of Kansas City.

Any views or requests for hearing should be submitted in writing and received by the Secretary, Board of Governors of the Federal Reserve System, Washington, D.C. 20551, not later than October 17, 1980.

Board of Governors of the Federal Reserve System, September 17, 1980.

Cathy L. Petryshyn,

Assistant Secretary of the Board.

[FR Doc. 80-29569 Filed 9-23-80; 8:45 am]

BILLING CODE 6210-01-M

Security Bancorp, Inc.; Proposed Acquisition of SecureData Corp.

Security Bancorp, Inc., Southgate, Michigan, has applied, pursuant to section 4(c)(8) of the Bank Holding Company Act (12 U.S.C. § 1843(c)(8)) and § 225.4(b)(2) of the Board's Regulation Y (12 CFR 225.4(b)(2)), for permission to acquire voting shares of SecureData Corp., Troy, Michigan.

Applicant states that the proposed subsidiary would engage in the following activities: providing data processing services for the internal operation of the Applicant, including all subsidiaries, and the preparation of banking reports for Applicant's subsidiary banks from data supplied by customers; providing clinic billing services to the medical industry; providing banking services to nonaffiliated banks; selling excess equipment capacity on a one-time and single-use basis, total such use not to exceed 5 percent of total equipment time; and providing the following data processing services: inventory records; accounts payable; accounts receivable; invoicing; and payroll. These activities would be performed from offices of Applicant's subsidiary in Troy, Michigan, with offices in Lincoln Park, Michigan, and Elkhart, Indiana, for capturing and transmitting data, and the geographic areas to be served are Michigan and the northern half of Indiana. Such activities have been specified by the Board in section 225.4(a) of Regulation Y as permissible for bank holding companies, subject to Board approval of individual proposals in accordance with the procedures of section 225.4(b).

Interested persons may express their views on the question whether consummation of the proposal can "reasonably be expected to produce benefits to the public, such as greater convenience, increased competition, or gains in efficiency, that outweigh possible adverse effects, such as undue concentration of resources, decreased or unfair competition, conflicts of interests, or unsound banking practices." Any request for a hearing on this question must be accompanied by a statement of the reasons a written presentation would not suffice in lieu of a hearing, identifying specifically any questions of fact that are in dispute, summarizing the evidence that would be presented at a hearing, and indicating how the party commenting would be aggrieved by approval of the proposal.

The application may be inspected at the offices of the Board of Governors or at the Federal Reserve Bank of Chicago.

Any views or requests for hearing should be submitted in writing and received by the Secretary, Board of Governors of the Federal Reserve System, Washington, D.C. 20551, not later than October 17, 1980.

Board of Governors of the Federal Reserve System, September 17, 1980.

Cathy L. Petryshyn,

Assistant Secretary of the Board.

[FR Doc. 80-29571 Filed 9-23-80; 8:45 am]

BILLING CODE 6210-01-M

Tennessee Homestead Co.; Acquisition of Bank

Tennessee Homestead Company, Ogden, Utah, has applied for the Board's approval under § 3(a)(3) of the Bank Holding Company Act (12 U.S.C. § 1842(a)(3)) to acquire an additional 1,835 voting shares (or 1-36 percent) of Bank of Utah, Ogden, Utah. The factors that are considered in acting on the application are set forth in § 3(c) of the Act (12 U.S.C. § 1842(c)).

The application may be inspected at the offices of the Board of Governors or at the Federal Reserve Bank of San Francisco. Any person wishing to comment on the application should submit views in writing to the Reserve Bank to be received not later than October 17, 1980. Any comment on an application that requests a hearing must include a statement of why a written presentation would not suffice in lieu of a hearing, identifying specifically any questions of fact that are in dispute and summarizing the evidence that would be presented at a hearing.

Board of Governors of the Federal Reserve System, September 17, 1980.

Cathy L. Petryshyn,

Assistant Secretary of the Board.

[FR Doc. 80-29568 Filed 9-23-80; 8:45 am]

BILLING CODE 6210-01-M

FEDERAL TRADE COMMISSION

L'Air Liquide, S.A.; Early Termination of the Waiting Period of the Premerger Notification Rules

AGENCY: Federal Trade Commission.

ACTION: Granting of request for early termination of the waiting period of the premerger notification rules:

SUMMARY L'Air Liquide, S.A. is granted early termination of the waiting period provided by law and the premerger notification rules with respect to the proposed acquisition of three subsidiaries of Allegheny Ludlum Industries, Inc. The grant was made by the Federal Trade Commission and the Assistant Attorney General in charge of the Antitrust Division of the Department of Justice in response to a request for early termination submitted by both parties. Neither agency intends to take any action with respect to this acquisition during the waiting period.

EFFECTIVE DATE: September 11, 1980.

FOR FURTHER INFORMATION CONTACT: Naomi Licker, Attorney, Premerger Notification Office, Bureau of Competition, Room 303, Federal Trade Commission, Washington, D.C. 20580, (202) 523-3894.

SUPPLEMENTARY INFORMATION: Section 7A of the Clayton Act, 15 U.S.C. § 18a, as added by Title II of the Hart-Scott-Rodino Antitrust Improvements Act of 1976, requires persons contemplating certain mergers or acquisitions to give the Commission and Assistant Attorney General advance notice and to wait designated periods before consummation of such plans. Section 7A(b)(2) of the Act permits the agencies, in individual cases, to terminate this waiting period prior to its expiration and requires that notice of this action be published in the **Federal Register.**

By direction of the Commission.

Carol M. Thomas,

Secretary.

[FR Doc. 80-29610 Filed 9-23-80; 8:45 am]

BILLING CODE 6750-01-M

DEPARTMENT OF HEALTH AND HUMAN SERVICES

Office of Human Development Services

White House Conference on Aging; Technical Committee Meeting

The White House Conference on Aging Technical Committee was established to provide scientific and technical advice and recommendations to the National Advisory Committee of

the 1981 White House Conference on Aging and to the Executive Director of the 1981 White House Conference on Aging in developing issues to be considered and to produce technical documents to be used by the Conference.

Notice is hereby given pursuant to the Federal Advisory Committee Act, (Pub. L. 95–463, 5 U.S.C. App. 1, sec. 10, 1976) that the Technical Committee on Family, Social Services and Other Support Systems will hold a meeting on September 28 and September 29, 1980 in Room 437 and 439A in the Hubert H. Humphrey Building, Washington, D.C., 200 Independence Avenue, S.W.

At this meeting the committee will review the workplan/outline and make committee response to workplan and to further develop issues.

Further information on the Technical Committee meeting may be obtained from Mr. Jerome R. Waldie, Executive Director, White House Conference on Aging, Room 4059, 330 Independence Avenue, S.W., Washington, D.C. 20201, telephone (202) 245–1914. Technical Committee meetings are open for public observation.

This announcement is being published with less than 15 days advance notice because of difficulties in securing Federal meeting space.

Dated: September 17, 1980.

Mamie Welborne,

HDS Committee Management Officer.

[FR Doc. 80–29496 Filed 9–23–80; 8:45 am]

BILLING CODE 4110–92–M

White House Conference on Aging Technical Committee; Meeting

The White House Conference on Aging Technical Committee was established to provide scientific and technical advice and recommendations to the National Advisory Committee of the 1981 White House Conference on Aging and to the Executive Director of the 1981 White House Conference on Aging in developing issues to be considered and to produce technical documents to be used by the Conference.

Notice is hereby given pursuant to the Federal Advisory Committee Act (Pub. L. 95–463, 5 U.S.C. App. 1, sec. 10, 1976) that the Technical Committee on Health Promotion will hold a meeting on October 6 and October 7, 1980 in Room 5542, North Building, Health and Human Services.

At this meeting we will further review and analyze issues in health promotion, finish committee assignments and make consultant assignments.

Further information on the Technical Committee meeting may be obtained from Mr. Jerome R. Waldie, Executive Director, White House Conference on Aging, Room 4059, 330 Independence Avenue, S.W., Washington, D.C. 20201, telephone (202) 245–1914. Technical Committee meetings are open for public observation.

This announcement is being published with less than 15 days advance notice because of difficulties in securing Federal meeting space.

Dated: September 17, 1980.

Mamie Welborne,

HDS Committee Management Officer.

[FR Doc. 80–29495 Filed 9–23–80; 8:45 am]

BILLING CODE 4110–92–M

White House Conference on Aging Technical Committee; Meeting

The White House Conference on Aging Technical Committee was established to provide scientific and technical advice and recommendations to the National Advisory Committee of the 1981 White House Conference on Aging and to the Executive Director of the 1981 White House Conference on Aging in developing issues to be considered and to produce technical documents to be used by the Conference.

Notice is hereby given pursuant to the Federal Advisory Committee Act, (Pub. L. 95–463, 5 U.S.C. App. 1, sec. 10, 1976) that the Technical Committee on Long Term Care will hold a meeting on September 29 and September 30, 1980 in Rooms 337 and 339A of the Hubert H. Humphrey Building, 200 Independence Avenue, S.W., Washington, D.C.

At this meeting the committee will review the workplan/outline synopsis, make committee assignments, and determine consultants.

Further information on the Technical Committee meeting may be obtained from Mr. Jerome R. Waldie, Executive Director, White House Conference on Aging, Room 4059, 330 Independence Avenue, S.W., Washington, D.C. 20201, telephone (202) 245–1914. Technical Committee meetings are open for public observation.

This announcement is being published with less than 15 days advance notice because of difficulties in securing Federal meeting space.

Dated: September 17, 1980.

Mamie Welborne

HDS Committee Management Officer.

[FR Doc. 80–29499 Filed 9–23–80; 8:45 am]

BILLING CODE 4110–92–M

White House Conference on Aging Technical Committee; Meeting

The White House Conference on Aging Technical Committee was established to provide scientific and technical advice and recommendations to the National Advisory Committee of the 1981 White House Conference on Aging and to the Executive Director of the 1981 White House Conference on Aging in developing issues to be considered and to produce technical documents to be used by the Conference.

Notice is hereby given pursuant to the Federal Advisory Committee Act, (Pub. L. 95–463, 5 U.S.C. App. 1, sec. 10, 1976) that the Technical Committee on Research on Aging will hold a meeting on Monday, September 29, 1980 from 9:30 a.m. to 4:30 p.m. in Room 5542, Health and Human Services, North Building, Washington, D.C.

At this meeting the committee will review the workplan, determine format of final report, and finalize specific assignments for committee members in areas of research. Further information on the Technical Committee meeting may be obtained from Mr. Jerome R. Waldie, Executive Director, White House Conference on Aging, Room 4059, 330 Independence Avenue, S.W., Washington, D.C. 20201, telephone (202) 245–1914. Technical Committee meetings are open for public observation.

This announcement is being published with less than 15 days advance notice because of difficulties in securing Federal meeting space.

Dated September 17, 1980.

Mamie Welborne,

HDS Committee Management Officer.

FR Doc. 80–29500 Filed 9–23–80; 8:45 am]

BILLING CODE 4110–92–M

Office of the Secretary

Hospital-Affiliated Primary Care Centers; Delegations of Authority

Notice is hereby given that the following delegation and redelegations of authority have been made regarding Hospital-Affiliated Primary Care Centers under section 328 of the Public Health Service Act, as amended, (42 U.S.C. 254a–1):

1. Delegation from the Secretary of Health and Human Services to the Assistant Secretary for Health, with authority to redelegate, of all the authorities vested in the Secretary under section 328 of the Public Health Service Act, as amended, excluding the authority to issue regulations.

2. Redelegation from the Assistant Secretary for Health to the

Administrator, Health Services Administration, with authority to redelegate, of all the authorities delegated to the Assistant Secretary for Health under section 328 of the Public Health Service Act, as amended.

3. Redelegation from the Administrator, Health Services Administration, to the Regional Health Administrators, Public Health Service Regional Offices, with authority to redelegate, of the authority to award grants within their respective regions to community hospitals to support demonstration projects in the planning, development, and operation of hospital-affiliated primary care centers under section 328 of the Public Health Service Act, as amended, other than grants that are national or multi-regional in scope.

4. Redelegation by the Administrator, Health Services Administration, to the Director, Bureau of Community Health Services, Health Services Administration, with authority to redelegate, of all the authorities delegated to the Administrator, Health Services Administration, under section 328 of the Public Health Service Act, as amended, excluding the authorities specifically delegated to the Regional Health Administrators, Public Health Service Regional Offices, by the Administrator, Health Services Administration.

The above delegation and redelegations were effective on August 20, 1980.

Dated: September 11, 1980.

Frederick M. Bohen,

Assistant Secretary for Management and Budget.

[FR Doc. 80-29497 Filed 9-23-80; 8:45 am]

BILLING CODE 4110-84-M

Sharing of Medical Care Facilities and Resources; Delegations of Authority

Notice is hereby given that on August 20, 1980, the Secretary of Health and Human Services delegated to the Assistant Secretary for Health all the authority vested in the Secretary under section 327A of the Public Health Service Act, as amended, (42 U.S.C. 254a) concerning sharing of medical care facilities and resources, excluding the authority to issue regulations.

Previous delegations by the Secretary of the authority concerning sharing of medical care facilities and resources have been superseded. Provision has been made for delegations and redelegations to officials within the Public Health Service made pursuant to the Secretary's previous delegation to continue in effect pending further redelegation.

Dated: September 11, 1980.

Frederick M. Bohen,

Assistant Secretary for Management and Budget.

[FR Doc. 80-29498 Filed 9-23-80; 8:45 am]

BILLING CODE 4110-85-M

DEPARTMENT OF HOUSING AND URBAN DEVELOPMENT

[Docket No. D-80-620]

Section 414 Surplus Land Programs; Delegation of Authority

AGENCY: Department of Housing and Urban Development, New Community Development Corporation.

ACTION: Delegation of authority.

SUMMARY: Responsibility for management and disposition of surplus Federal real property under HUD's jurisdiction is hereby transferred from the Assistant Secretary for Community Planning and Development to the General Manager of the New Community Development Corporation.

SUPPLEMENTARY INFORMATION: Ever since its inception in 1969, the Surplus Land Program has been administered by the New Communities staff. When New Communities was made a separate Administration in 1973, the delegation of authority for the surplus land program was inadvertently left with its former parent organization, the Office of Community Planning and Development. In the 1978 reorganization of the New Community Development Corporation, a new office of Surplus Land and Housing was authorized to allow more active and positive administration of the Surplus Land program. This redelegation of authority makes clear where responsibility for administration of the program lies. Furthermore, the redelegation makes it no longer necessary for the General Manager of the New Community Development Corporation to obtain the approval of the Assistant Secretary for Community Planning and Development before transferring a piece of surplus Federal land to a local entity.

Accordingly, the Secrtary delegates as follows:

Section A. Authority Delegated

The General Manager of the New Community Development Corporation is authorized to:

1. Exercise the power and authority of the Secretary of Housing and Urban Development with respect to surplus Federal real property under Section 414 of the Housing and Urban Development Act of 1969 (83 Stat. 379; 40 U.S.C. 484(b)), as amended.

2. Issue rules and regulations as necessary or desirable in order to carry out such power and authority.

Section B. Authority Excepted

There is excepted from the authority delegated under Section A:

1. The power to sue and be sued.

Section C. Authority To Redelgate

The General Manager is authorized to redelegate to any of the employees of the Department the authority delegated in Section A, except the authority to issue rules and regulations.

Section D. Supersedure

This delegation supersedes all preceding delegations (35 FR 2745-6; 35 FR 16102; 36 FR 5004-5; 38 FR 8011) of the authority delegated in Section A to the Assistant Secretary for Community Planning and Development or predecessor official.

However, all preceding delegations or redelegations of transfer authority with respect to specific tracts of surplus Federal real property to officials of field offices of the Department remain in effect and are not superseded by this delegation.

Section E

No use of the authority delegated involving potential use of CDBG or discretionary funds will be initiated without prior consultation with the Office of the Assistant Secretary of Community Planning and Development.

Section 414 of the Housing and Urban Development Act of 1969 (83 Stat. 379; 40 U.S.C. 484(b)), as amended.

(Sec. 7(d), Department of Housing and Urban Development Act, 42 U.S.C. 3535(d))

Issued at Washington, D.C., September 16, 1980.

Moon Landrieu,

Secretary, Department of Housing and Urban Development.

[FR Doc. 80-29584 Filed 9-23-80; 8:45 am]

BILLING CODE 4210-01-M

[Docket No. N-80-1026]

Privacy Act of 1974; Amendment to System of Records

AGENCY: Department of Housing and Urban Development.

ACTION: Notice of proposed amendment to existing system of records.

SUMMARY: The Department is giving notice that it intends to amend the language describing Categories of Individuals covered by the HUD Child Care Center Files (HUD/DEPT-58) system of records.

EFFECTIVE DATE: This notice shall become effective October 24, 1980, unless comments are received on or before that date which would result in a contrary determination.

ADDRESS: Rules Docket Clerk, Room 5218, Department of Housing and Urban Development, 451 Seventh Street, SW., Washington, D.C. 20410.

FOR FURTHER INFORMATION CONTACT: Robert English, Departmental Privacy Act Officer, telephone, 202-557-0605.

SUPPLEMENTARY INFORMATION: The HUD Child Care Center Files (HUD/DEPT-58) is a manual system of records consisting of applications both of prospective children and Center personnel; enrollment forms of the children; health records of children and staff; evaluation forms of children and staff; and progress and other pertinent data relating to current and former enrollees. Language in the presently published system notice does not make it clear that the system contains data pertaining to applicants and former enrollees, as well as current enrollees. Language in the Categories of Individuals covered by the system is being amended to clarify this point. The words, "applicants to the Center, and former enrollees" have been added to the Categories of Individuals section. A new system manager has been identified and authority for maintenance of the system has been added. The notice is published below in its entirety, as amended. Previously the system was published at 44 FR 72300 (December 13, 1979). The prefatory statement containing General Routine Uses was published at 44 FR 72288 (December 13, 1979) and amended at 45 FR 26825 (April 21, 1980). Appendix A, which lists the addresses of HUD's field offices was published at 44 FR 72307 (December 13, 1979), and supplemented at 45 FR 6479 (January 18, 1980). A report of the Department's intention to amend this system was filed with the Speaker of the House, the President of the Senate, and the Office of Management and Budget on July 28, 1980.

Authority: 5 U.S.C. 552(a), 88 Stat. 1896; Sec. 7(d), Department of HUD Act (42 U.S.C. 3535(d)).

Issued at Washington, D.C., September 11, 1980.

William A. Medina,

Assistant Secretary for Administration.

HUD/DEPT—58

SYSTEM NAME:

HUD Child Care Center Files.

SYSTEM LOCATION:

Headquarters Office.

CATEGORIES OF INDIVIDUALS COVERED BY THE SYSTEM:

Children enrolled in the Center and their parents, staff of the Center, others who may be involved in special programs of the Center, and names of donors, applicants to the Center, and former enrollees.

CATEGORIES OF RECORDS IN THE SYSTEM:

Information on the child, including parents' names and addresses and income; health records of children and staff; information of staff including work history; current work evaluation, and other work-related information; evaluation of the children's progress in the Center; names of donors and amounts of donations to the Center.

AUTHORITY FOR MAINTENANCE OF THE SYSTEM:

Housing Authorization Act of 1976, P.L. 94-375.

ROUTINE USES OF RECORDS MAINTAINED IN THE SYSTEM, INCLUDING CATEGORIES OF USERS AND THE PURPOSES OF SUCH USES:

See Routine Uses in prefatory statement. Other routine uses: none.

POLICIES AND PRACTICES FOR STORING, RETRIEVING, ACCESSING, RETAINING, AND DISPOSING OF RECORDS IN THE SYSTEM.

STORAGE:

Paper records in file cabinets.

RETRIEVABILITY:

By name of child or name of staff member.

SAFEGUARDS:

Records will be maintained in lockable file cabinets with access limited to authorized personnel of the Center.

RETENTION AND DISPOSAL:

Records of children who leave will be stored for one year; records of staff who leave will be stored for three years. At the expiration of those periods, records will be disposed of.

SYSTEM MANAGER(S) AND ADDRESS:

Director, HUD Child Care Center, Department of HUD, 451 Seventh Street SW., Washington, D.C. 20410.

NOTIFICATION PROCEDURE:

For information, assistance or inquiry about the existence of records, contact the Privacy Act Officer at the Headquarters location, in accordance with 24 CFR Part 16. This location is given in Appendix A.

RECORD ACCESS PROCEDURES.

The Department's rules for providing access to records to the individual concerned appear in 24 CFR Part 16. If additional information or assistance is required, contact the Privacy Act Officer at the Headquarters location. This location is given in Appendix A.

CONTESTING RECORD PROCEDURES:

The Department's rules for contesting the contents of records appealing initial denials, by the individuals concerned, appear in 24 CFR Part 16. If additional information or assistance is needed, it may be obtained by contacting: (i) in relation to contesting contents of records, the Privacy Act Officer at the Headquarters location. This location is given in Appendix A; (ii) in relation to appeals of initial denials, the HUD Departmental Privacy Appeals Officer, Office of General Counsel, Department Housing and Urban Development, 451 Seventh Street SW., Washington, D.C. 20410.

RECORD SOURCE CATEGORIES:

Applicants; current and formerly enrolled children and their parents, current and former staff members; doctors and former institutions attended by the children.

[FR Doc. 80-29659 Filed 9-23-80; 8:45 am]

BILLING CODE 4210-01-M

DEPARTMENT OF THE INTERIOR

Bureau of Indian Affairs

[INT DEIS 80-60]

Ute Mountain Ute Proposed Strip Coal Mine; Public Hearing and DEIS Availability

AGENCY: Bureau of Indian Affairs Interior.

SUMMARY: Pursuant to Section 102(2)(2)(c) of the National Environmental Policy Act of 1969, the Department of the Interior has prepared a Draft Environmental statement for the proposed coal strip mine on the Ute Mountain Indian Reservation, San Juan County, Colorado.

The proposed action is the approval by the Department of the Interior of a lease of Ute Mountain Ute Tribal lands for the purpose of mining coal. The lease is entirely located on the Ute Mountain Ute Reservation, San Juan County, in northwestern New Mexico. The proposed project will consist of a 10-year lease with an option to renew for 10 years. Exploration conducted in the late 1960's has indicated approximately 8-10 million tons of coal that can be stripped-mined.

Copies are available for inspection at the following locations:

Office of Communication, Room 7200, Interior Building, Washington, D.C. 20240, Telephone: (202) 343–3171.

Albuquerque Area Office, Bureau of Indian Affairs, Environmental Quality Services, 500 Gold Avenue SW., P.O. Box 2088, Albuquerque, New Mexico 87103, Telephone: (505) 766–3374.

Ute Mountain Ute Agency, Bureau of Indian Affairs, Towaoc, Colorado 81334, Telephone: (303) 565–8471.

Colorado State Division of Planning, 524 State Social Services Building, 1575 Sherman Street, Denver, Colorado 80203, Telephone: (303) 892–2178.

Single copies of the Draft Environmental Statement may be obtained from the Albuquerque Area Office, Bureau of Indian Affairs, Environmental Quality Services, 500 Gold Avenue, S.W., P.O. Box 2088, Albuquerque, New Mexico 87103. Additional copies may be obtained by writing the National Technical Information Service, Department of Commerce, Springfield, Virginia 22151.

Oral and/or written comments will be received at a public hearing held at 9:30 a.m., October 16, 1980, at the Conference Room of the Bureau of Indian Affairs, Ute Mountain Ute Agency, Towaoc, Colorado.

Oral and written statements by interested parties are invited. Oral statements by any party will be limited to no more than ten (10) minutes. Written statements can be entered into the record by filing a copy with the presiding officer.

Additional information on the hearing and copies of the Draft Environmental Impact Statement may be obtained from the Area Environmental Quality Specialist, Bureau of Indian Affairs, Albuquerque Area Office, 500 Gold Avenue, S.W., P.O. Box 2088, Albuquerque, New Mexico 87103, telephone (505) 766–3374.

Written comments on the Draft Environmental Impact Statement should be forwarded to the Albuquerque Area Office at the above address by November 20, 1980.

Dated: September 17, 1980.

James H. Rathlesberger,

Special Assistant to the Assistant Secretary of the Interior.

[FR Doc. 80–29509 Filed 9–23–80; 8:45 am]

BILLING CODE 3910–01–M

Bureau of Land Management

[W-72289]

Wyoming; Application

September 12, 1980.

Notice is hereby given that pursuant to Section 28 of the Mineral Leasing Act of 1920, as amended (30 U.S.C. 185), the Cities Service Gas Company of Oklahoma City, Oklahoma, filed an application for a right-of-way to construct a 4½-inch and a 6⅝-inch pipeline for the purpose of transporting natural gas across the following described public lands:

Sixth Principal Meridian, Wyoming

T. 19 N., R. 93 W.,
Sec. 6, Lots 2 and 3, and S⅓NE¼;
Sec. 8, NW¼NE¼, S½NE¼, NE¼NW¼, NE¼SE¼, and S½NE¼;
Sec. 16, W½;
Sec. 18, Lot 2, NE¼NE¼, S½NE¼, and E½NW¼.
T. 19 N., R. 94 W.,
Sec. 24, NE¼SW¼, and N½SE¼.

The proposed pipeline will transport natural gas from the Tierney 7–24, Tierney 11–13, Teirney 9–7, Champlin 337 E-1, U State I, Tierney 8–5 and Tierney 11–31 Wells to points of connection with existing pipelines all located in T. 19 N., Rgs. 93 and 94 W., Carbon and Sweetwater Counties, Wyoming.

The purpose of this notice is to inform the public that the Bureau will be proceeding with consideration of whether the application should be approved, and if so, under what terms and conditions.

Interested persons desiring to express their views should do so promptly. Persons submitting comments should include their name and address and send them to the District Manager, Bureau of Land Management, 1300 Third Street, P.O. Box 670, Rawlins, Wyoming 82301.

Harold G. Stinchcomb,

Chief, Branch of Lands and Minerals Operations.

[FR Doc. 80–29472 Filed 9–23–80; 8:45 am]

BILLING CODE 4310–84–M

[INT FEIS 80–36]

Rangeland Management Program for Mountain Valley Planning Area, Utah; Availability of Final Environmental Impact Statement

Pursuant to Section 102(2)(C) of the National Environmental Policy Act of 1969 and a 1975 Federal Court Order, the Bureau of Land Management (BLM) has prepared a grazing environmental impact statement (EIS) for the Mountain Valley rangeland management program in Sevier, Piute, and Sanpete Counties and small portions of Wayne, Garfield, Millard, and Juab Counties.

The EIS examines six alternative proposals: (1) optimize non-livestock resources, (2) optimize livestock grazing, (3) rangeland management recommendation, (4) eliminate livestock grazing, (5) continuation of present management, and (6) adjust spring livestock use. The objective of the alternatives is to provide land use management on the basis of multiple use and long-term sustained yield of the natural resources on 499,972 acres of public land.

The alternatives examine proposed levels of grazing use ranging from 16,917 to 39,694 AUMs for livestock and from 14,658 to 25,218 AUMs for big game initially, and long-term (20 years) levels up to 53,090 AUMs for livestock and 58,117 AUMs for big game. Vegetation modifications, water developments, fences, and prescribed periods of rest from grazing would accompany the proposed levels of forage allocation.

Alternatives 3 and 6 are the BLM-preferred alternatives. Under these alternatives, vegetation production would increase, overall watershed conditions and big game habitat would improve. The long-term forage allocations to livestock and big game would increase. Recreation use and rancher income would be beneficially impacted.

The Director, Bureau of Land Management, invites written comments on the final statement. Comments should be submitted to District Manager, Bureau of Land Management, 150 East 900 North, Richfield, Utah 84701. Comments will be accepted until October 29, 1980.

Copies of the environmental impact statement are available from the Richfield District BLM Office at the above address. Public reading copies of the statement will be available at the following locations:

Office of Public Affairs, Bureau of Land Management, Interior Building, 18th and C Street NW, Washington, D.C.

Richfield District Office, Bureau of Land Management, 150 East 900 North, Richfield, Utah.

Utah State Office, Bureau of Land Management, University Club Building, 136 East South Temple, Salt Lake City, Utah.

Sevier River Resource Area Office, Bureau of Land Management, 180 North 100 East, Richfield, Utah.

Dated: September 17, 1980.

Dean Stepanek,

Associate Utah State Director.

[FR Doc. 80-29516 Filed 9-23-80; 8:45 am]

BILLING CODE 4310-84-M

Fish and Wildlife Service

Availability of Migratory Bird Hunting and Conservation Stamps at Selected Locations Administered by the Fish and Wildlife Service

AGENCY: Fish and Wildlife Service, Interior.

ACTION: Notice.

SUMMARY: This notice informs the public that the Fish and Wildlife Service has made arrangements to sell Migratory Bird Hunting and Conservation Stamps at full face value at selected locations. This will provide additional opportunities and convenience for the non-hunting public to acquire stamps.

DATES: Stamps are now available.

ADDRESS: A list of selected locations administered by the Fish and Wildlife Service where Migratory Bird Hunting and Conservation Stamps are on sale is available from: Director, U.S. Fish and Wildlife Service, Division of Refuge Management, 18th and C Streets NW., Washington, D.C. 20240.

FOR FURTHER INFORMATION CONTACT: Nancy Smith, U.S. Fish and Wildlife Service, Division of Refuge Management, Washington, D.C. 20240, 202-343-4311.

SUPPLEMENTARY INFORMATION: The Migratory Bird Hunting Stamp Act, which went into effect on July 1, 1934, authorized the annual inssuance of what is popularly known as the Duck Stamp. In 1976 Congress changed the official name of the stamp to the Migratory Bird Hunting and Conservation Stamp. In the 44 years between July 1, 1934, and July 1978, more than 78 million of these revenue stamps have been sold. The funds from their sale are used by the U.S. Fish and Wildlife Service to purchase land for the National Wildlife Refuge System. Duck Stamps may be purchased from first- and second-class post offices. Collectors seeking particularly fine, well-centered copies may obtain them from the Philatelic Sales Division, U.S. Postal Service, Washington, D.C. 20265. Beginning in mid-1976, the Department of the Interior was also authorized to sell Duck Stamps through other facilities to allow nonhunters interested in conservation to buy them.

The Migratory Bird Hunting Stamp Act was enacted when conservationists because alarmed by a rapid decrease in numbers of wild ducks and geese brought about by overshooting and a protracted drought which lasted through the early 1930's. Drainage had also emptied millions of acres of marsh nesting sites. The Act provided funds for the conservation of migratory waterfowl restoring some drained land to the country's wildlife, and saving marshlands not yet destroyed.

Under the Act, any person who hunts ducks, geese, swans, or brant and is 16 years of age of older must carry a current, signed Duck Stamp. This qualifies the hunter as a legal wildfowler, provided he/she has a State hunting license. The Migratory Bird Hunting Stamp Act, by requiring that sportsman purchase a Duck Stamp before they hunt waterfowl, has created a continuing source of funds for waterfowl habitat acquisition.

Revenue received from the sale of Duck Stamps through September 30, 1978, totaled more than $198 million. During this period, Duck Stamp funds were used to acquire about 822,000 acres of refuge lands for migratory birds; and also to purchase outright nearly 446,000 acres, and to obtain easements prohibiting drainage of more than 1,112,000 acres of wetlands for waterfowl production areas. Thus, sportsmen and others who purchase stamps are contributing directly to the acquisition of national wildlife refuges.

It is impractical to publish a list of approximately 75 locations administered by the Fish and Wildlife Service where Migratory Bird Hunting and Conservation Stamps will be available. Consequently, a list of those locations is available by writing the Director at the above address.

The primary author of this notice is Nancy Smith.

Dated: September 5, 1980.

Robert S. Cook,

Acting Director, Fish and Wildlife Service.

[FR Doc. 80-29512 Filed 9-23-80; 8:45 am]

BILLING CODE 4310-55-M

Draft National Fish and Wildlife Policy

AGENCY: Fish and Wildlife Service, Interior.

ACTION: Notice.

SUMMARY: The Service is considering the formulation of a national fish and wildlife policy that would clarify and reaffirm this country's commitment to the conservation of natural resources. On May 2, 1980, the Service requested comments from the public on a draft portion of the policy dealing with federal-state relationships, 45 FR 29542. This comment period closed on July 1, 1980. To provide more opportunity for public review and comments, the comment period was reopened from July 17 to August 15, 1980, 45 FR 47937. After reviewing the comments received during these periods, the Service has made significant changes in the draft portion of the policy dealing with federal-state relationships. Accordingly, this draft is now available for public inspection and copying during normal business hours at the Service's Office of Public Affairs (Room 3240, Department of the Interior—Main Building, 18th and C Streets, N.W., Washington, D.C. 20240) and comments thereon will be accepted through October 10, 1980.

DATES: All comments must be received on or before October 10, 1980.

ADDRESSES: Send comments to Director, Fish and Wildlife Service, Division of Program Plans, Washington, D.C. 20240.

FOR FURTHER INFORMATION CONTACT: Lynn A. Greenwalt, Director, Fish and Wildlife Service, Washington, D.C. 20240 (telephone: 202-343-4717).

Dated: September 19, 1980.

Robert S. Cook,

Acting Director, Fish and Wildlife Service.

[FR Doc. 80-29581 Filed 9-23-80; 8:45 am]

BILLING CODE 4310-55-M

Office of Surface Mining Reclamation and Enforcement

[Federal Leases Nos. W-496544 and a Portion of W-3397]

Carter Mining Co.; Caballo Mine, Campbell County, Wyo.; Notice of Pending Decision To Approve a Coal Mining and Reclamation Plan

AGENCY: Office of Surface Mining Reclamation and Enforcement, Department of the Interior.

ACTION: Notice of pending decision to approve surface coal mining and reclamation plan with stipulations.

SUMMARY: Pursuant to § 1506.6 of Title 40 and § 211.5 of Title 30, Code of Federal Regulations, notice is hereby given that the Region V Office of Surface Mining Reclamation and Enforcement (OSM) has completed a technical and environmental review of Carter Mining Company's Caballo mining and reclamation plan and has recommended to the Department that the plan be approved with stipulations. Notice of availability of Carter Mining Company's application was published in the **Federal Register** on June 2, 1980, 45 FR No. 107, p. 37307.

Location of Lands To Be Affected by Mining

Applicant: Carter Mining Company.
Mine Name: Caballo.
State: Wyoming.
County: Campbell.

Township, Range, Section: T. 48 N., R. 70 W., Sections 7 and 18, 6th PM, Campbell County, Wyo.

T. 48 N., R. 71 W.,
Secs. 8, 9, 10, 11, 12, 13, 14, 15, 17, 20, 21, 22, 23, 26, 27, 28, 6th PM, Campbell County, Wyoming, Office of Surface Mining Reference No. WY0013a.

The mine, located about 17 miles southeast of Gillette, Wyoming is currently operating on non-Federal lands under Wyoming State permit No. 433. Privately-owned coal is presently mined at the rate of about 8 million tons/year from a mine plan area of approximately 3,338 acres.

The proposed expansion of the mine into the Federal coal lease area involves surface mining of Federal coal overlain by privately-owned surface for 34 years at an expanded production rate of approximately 11.5 million tons/year. The Federal coal lease area is approximately 6,702 acres; of this area, approximately 3,215 acres will be disturbed. Coal would continue to be shipped via unit train.

The U.S. Geological Survey (GS) has previously evaluated impacts that could occur from development of the Caballo Mine in its final environmental impact statement (EIS), *Proposed Mining and Reclamation Plan Caballo Mine, Campbell County, Wyoming* (1979). In addition, the Bureau of Land Management (BLM) analyzed regional impacts from development of this mine and other mines in the final environmental impact statement, *Development of Coal Resources in Eastern Powder River, Wyoming* (1979). OSM has now prepared a technical analysis and environmental assessment, and based on OSM's analyses, as well as the above mentioned EIS's OSM has determined that no significant impacts would occur that have not already been evaluated in these previous EIS's.

The purpose of this notice is to inform the public that based on OSM staff analysis of the mining and reclamation plan and the reviews of other State and Federal agencies, the Regional Director, Region V, OSM, is recommending approval with stipulations of Carter Mining Company's mining and reclamation plan for Caballo Mine. Any person having an interest which is or may be adversely affected by the recommended approval may request, in writing, a public meeting on the proposed decision.

The applicant's plan was reviewed under 30 CFR Part 211 and some of the performance standards of the permanent program on Federal lands. Amendments to 30 CFR 701.11 and 741.11 postpone the effective date for implementation of the Permanent Regulatory Program for Federal lands until the date of approval of a State program or until implementation of a Federal program for a State (See 44 FR 77440–47, December 31, 1979). Departmental action on Carter Mining Company's mining and reclamation plan at this time would not relieve the applicant of the obligation to file a new permit application or appropriate changes not later than two months after the effective date of the final Wyoming program approval. Upon receipt of that application, OSM will review the application pursuant to 30 CFR Chapter VII, Subchapter D.

The Assistant Secretary for Energy and Mineral's decision will be based on the recommendation of OSM, the Bureau of Land Management, the U.S. Geological Survey, and any public comments received on or before October 14, 1980.

DATES: All requests for a public meeting must be made on or before October 14, 1980. No decision on the plan will be made by the Assistant Secretary, Energy and Minerals, prior to the expiration of the 20-day period.

ADDRESSES: The technical analysis, environmental assessment, and proposed stipulations are available on request from the Office of Surface Mining, Region V. Any comments on the proposed approval should be submitted to the Regional Director, Region V, Office of Surface Mining, Brooks Towers, 1020 Fifteenth Street, Denver, Colorado 80202.

FOR FURTHER INFORMATION CONTACT: Mark Humphrey or John Hardaway, Office of Surface Mining, Region V, Brooks Towers, 1020 Fifteenth Street, Denver, Colorado 80202. Telephone: (303) 837–4072 or FTS 327–4072.

Paul L. Reeves,
Acting Director.
September 18, 1980.
[FR Doc. 80-29482 Filed 9-23-80; 8:45 am]
BILLING CODE 4310-05-M

INTERSTATE COMMERCE COMMISSION

Motor Carrier Finance Applications; Decision-Notice

The following applications seek approval to consolidate, purchase, merge, lease operating rights and properties, or acquire control of motor carriers pursuant to 49 U.S.C. 11343 or 11344. Also, applications directly related to these motor finance applications (such as conversions, gateway eliminations, and securities issuances) may be involved.

The applications are governed by Special Rule 240 of the Commission's Rules of Practice (49 CFR 1100.240). These rules provide, among other things, that opposition to the granting of an application must be filed with the Commission within 30 days after the date of notice of filing of the application is published in the **Federal Register.** Failure seasonably to oppose will be construed as a waiver of opposition and participation in the proceeding. Opposition under these rules should comply with Rule 240(c) of the Rules of Practice which requires that it set forth specifically the grounds upon which it is made, and specify with particularity the facts, matters and things, relied upon, but shall not include issues or allegations phrased generally. Opposition not in reasonable compliance with the requirements of the rules may be rejected. The original and one copy of any protest shall be filed with the Commission, and a copy shall also be served upon applicant's representative or applicant if no representative is named. If the protest includes a request for oral hearing, the request shall meet the requirements of Rule 240(c)(4) of the special rules and shall include the certification required.

Section 240(e) further provides, in part, that an applicant who does not intend timely to prosecute its application shall promptly request its dismissal.

Further processing steps will be by Commission notice or order which will be served on each party of record. *Broadening amendments will not be accepted after the date of this publication except for good cause shown.*

Any authority granted may reflect administratively acceptable restrictive amendments to the transaction proposed. Some of the applications may have been modified to conform with Commission policy.

We find with the exception of those applications involving impediments (e.g., jurisdictional problems, unresolved fitness questions, questions involving possible unlawful control, or improper divisions of operating rights) that each applicant has demonstrated, in accordance with the applicable provisions of 49 U.S.C. 11301, 11302, 11343, 11344, and 11349, and with the Commission's rules and regulations, that the proposed transaction should be authorized as stated below. Except where specifically noted this decision is

neither a major Federal action significantly affecting the quality of the human environment nor does it appear to qualify as a major regulatory action under the Energy Policy and Conservation Act of 1975.

In those proceedings containing a statement or note that dual operations are or may be involved we find, preliminarily and in the absence of the issue being raised by a protestant, that the proposed dual operations are consistent with the public interest and the national transportation policy subject to the right of the Commission, which is expressly reserved, to impose such conditions as it finds necessary to insure that applicant's operations shall conform to the provisions of 49 U.S.C. 10930.

In the absence of legally sufficient protests as to the finance application *or* any application directly related thereto filed on or before October 24, 1980 (or, if the application later becomes unopposed), appropriate authority will be issued to each applicant (except those with impediments) upon compliance with certain requirements which will be set forth in a notification of effectiveness of this decision-notice. To the extent that the authority sought below may duplicate an applicant's existing authority, the duplication shall not be construed as conferring more than a single operating right.

Applicant(s) must comply with all conditions set forth in the grant or grants of authority within the time period specified in the notice of effectiveness of this decision-notice, or the application of a non-complying applicant shall stand denied.

MC-F-14433F, filed June 19, 1980. H. P. WALKER (Walker) (26380 Van Born Road, Dearborn, MI 48125)—control—G4W TRANSPORT, INC. (G4W) (27529 Lyndon, Livonia, MI (48125). Representative: Martin J. Leavitt, 22375 Haggerty Road, P.O. Box 400, Northville, MI 48167. Walker has acquired all of the stock of G4W and seeks approval of his most recent purchase of the remaining 50 percent of G4W's outstanding stock. Walker also controls Geo. F. Alger Company, a motor common carrier operating in interstate commerce. G4W's contract carrier operating rights are contained in Permit MC 140561 and authorize transportation of *corrugated paper containers,* from Warren, MI to points in IN (except points in Lake County, IN) and OH with no transportation for compensation on return except as otherwise authorized. *Restriction:* The operations are limited to transportation service under continuing contract or contracts with Weyerhauser Co., of Chicago, IL. George F. Alger Company operates under Certificate MC 146737 and Sub Numbers thereto which authorize transportation of various special commodities over irregular routes generally between AL, IA, IL, KY, MI, MN, MO, MS, PA, TN, and WI. (Hearing site: Washington, D.C. or Detroit, MI.)

MC-F-14145F, filed August 17, 1979. Application for transfer from PAUL E. REED, d.b.a. PUNCHES TRUCK LINE of Topeka, Kansas, To ROSS TRUCK LINE, INC. of Paola, Kansas, of authority now held by transferor in MC 98733 (Sub-3), described as follows: *General commodities:* From Topeka, Kansas, over U.S. Highway 75 to an unnumbered county road approximately 8 miles south of Topeka, Kansas, thence east via said unnumbered county road approximately 10 miles to Richland, Kansas, thence south via an unnumbered county road to Overbrook, thence south via an unnumbered county road approximately 4 miles, thence east via said unnumbered county road 1 mile, thence south via said unnumbered county road 2 miles, thence east via said unnumbered county road ¾ mile, thence south via said unnumbered county road to Michigan Valley, Kansas, and return over the same route, serving the intermediate points of Overbrook and Richland, Kansas. Also, From Topeka, Kansas, to an intersection with an unnumbered country road approximately 2 miles north of Lyndon, thence west on said unnumbered county road approximately 3½ miles to Vassar, Kansas, and return to said intersection of said unnumbered county road and U.S. Highway 75, thence south on U.S. Highway 75 to Lyndon, thence south on U.S. Highway 75 to an intersection with Kansas Highway 68, thence south and east via Kansas Highway 68 to Quenemo, Kansas, thence west 6 miles of Kansas Highway 68 to an intersection with an unnumbered county road, thence south 5 miles on said unnumbered county road to Melvern, thence west on an unnumbered county road 3 miles to U.S. Highway 75, thence south on U.S. Highway 75 approximately 2 miles to an intersection with an unnumbered county road, thence west on said unnumbered county road approximately 3 miles to Olivet and return, thence north on U.S. Highway 75 to Lyndon and return to Topeka, serving the points of Topeka, Pauline, Carbondale, Vassar and Lyndon. Also to include the commodities of Berryton and Clinton via the following route: East from highway 75 in Topeka, on 45th Street a distance of approximately 2 miles to an unnumbered county road, commonly known as Berryton Road, south on said Berryton Road to the City of Berryton; then south on the same unnumbered country road a distance of approximately 3 miles to an unnumbered county road which is presently authorized on Route 217. From the Community of Richland, which is presently authorized under Route 217, To the east a distance of approximately 1 mile on an unnumbered county road, then north a distance of approximately three-quarters of a mile on an unnumbered county road then east a distance of approximately 5 miles on an unnumbered county road to the city of Clinton, from there, east on an unnumbered county road a distance of approximately 9 miles to U.S. Highway 59, also to include the city of Centropolis via the following route: From Michigan Valley, which is presently authorized under Route 217, east on an unnumbered county road a distance of approximately 15 miles, then north a distance of approximately 1 mile to the city of Centropolis, from there, east a distance of approximately ½ mile, then north a distance of approximately 6 miles on an unnumbered county road to U.S. Highway 56, or from Centropolis, a distance of approximately 5 miles on an unnumbered county road to U.S. Highway 59. Also to include the cities of Pomona and Richter, via the following routes: East from Vassar which is presently authorized under Route 217, along Kansas Highway 268, a distance of approximately 9 miles to the city of Pomona, from there continuing east on Highway 268, a distance of approximately 10 miles to the city of Ottawa, including the intermediate point of Richter. Or from Pomona to the west on Kansas Highway 268, a distance of 4 miles, then south on an unnumbered county road a distance of approximately 2 miles to the city of Quenemo, which is presently authorized under Route 217, also from Olivet, which is presently authorized under Route 217, To and including all points within 3 miles of the shore line of Melvern Lake by various county roads. Carrier to return to Olivet via the same various roads in the vicinity of Melvern Lake, also from Melvern, which is presently authorized under Route 217, To Interstate Highway 35, via an unnumbered county road to southeast from Melvern a distance of approximately 5 miles to 1-35; thence northeast on I-35 approximately 31 miles to the LeLoup exit, thence north on an unnumbered county road approximately 1 mile to LeLoup; thence west on an unnumbered county road a distance of 1 mile; thence north on an unnumbered county approximately 6

miles to Baldwin City. All extensions of Route 217 in this application are intended to and do include the right of joinder to all authority presently held in Route 358. *General Commodities:* Between Topeka and Ottawa, Kansas, through Lawrence and Baldwin, Kansas, with no service between Topeka and Lawrence, Kansas. Also, From Topeka, Kansas, south via U.S. Highway 75 to the junction of U.S. Highway 50N thence east via U.S. Highway 50N to the junction of U.S. Highway 59 known as Baldwin Junction thence continuing via U.S. Highway 50N to Baldwin and return over the same route, with service authorized from, to and between Globe, Worden, and Baldwin, Kansas, and between said points on the one hand, and points now authorized to be served under the certificate herein, on the other. Vendee intends to tack or join authority sought with authority now held by vendee in MC–45893 and Subs thereunder. Point of tacking or joinder to be Ottawa, Kansas.

Note.—Any duplication in this document of authority presently held by carrier does not confer more than one operating right.

Agatha L. Mergenovich,

Secretary.

[FR Doc. 80–29493 Filed 9–23–80; 8:45 am]

BILLING CODE 7035–01–M

Motor Carrier Finance Applications; Decision-Notice

The following applications, filed on or after July 3, 1980, seek approval to consolidate, purchase, merge, lease operating rights and properties, or acquire control of motor carriers pursuant to 49 U.S.C. 11343 or 11344. Also, applications directly related to these motor finance applications (such as conservations, gateway eliminations, and securities issuances) may be involved.

The applications are governed by Special Rule 240 of the Commission's Rules of Practice (49 CFR 1100.240). An interim proposed final Rule 240 reflecting changes to comport with the Motor Carrier Act of 1980 was published in the July 3, 1980, **Federal Register** at 45 FR 45529 under Ex Parte 55 (Sub-44), *Rules Governing Applications Filed By Motor Carriers Under 49 U.S.C. 11344 and 11349.* Those rules provide among other things, that opposition to the granting of an application must be filed with the Commission in the form of verified statements within 45 days after the date of notice of filing of the application is published in the **Federal Register.** Failure seasonably to oppose will be construed as a waiver of opposition and participation in the proceeding. If the protest includes a request for oral hearing, the request shall meet the requirements of Rule 240(C) of the special rules and shall include the certification required.

Persons wishing to oppose an application must follow the rules under 49 CFR 1100.240(B). A copy of any application, together with applicant's supporting evidence, can be obtained from any applicant upon request and payment to applicant of $10.00, in accordance with 49 CFR 1100.240(A)(h).

Amendments to the request for authority will not be accepted after the date of this publication. However, the Commission may modify the operating authority involved in the application to conform to the Commission's policy of simplifying grants of operating authority.

We find, with the exception of those applications involving impediments (e.g., jurisdictional problems, unresolved fitness questions, questions involving possible unlawful control, or improper divisions of operating rights) that each applicant has demonstrated, in accordance with the applicable provisions of 49 U.S.C. 11301, 11302, 11343, 11344, and 11349, and with the Commission's rules and regulations, that the proposed transaction should be authorized as stated below. Except where specifically noted this decision is neither a major Federal action significantly affecting the quality of the human environment nor does it appear to qualify as a major regulatory action under the Energy Policy and Conservation Act of 1975.

In the absence of legally sufficient protests as to the finance application *or* to any application directly related thereto filed on or before November 10, 1980 (or, if the application later becomes unopposed), appropriate authority will be issued to each applicant (unless the application involves impediments) upon compliance with certain requirements which will be set forth in a notification of effectiveness of this decision-notice. To the extent that the authority sought below may duplicate an applicant's existing authority, the duplication shall not be construed as conferring more than a single operating right.

Applicant(s) must comply with all conditions set forth in the grant or grants of authority within the time period specified in the notice of effectiveness of this decision-notice, or the application of a non-complying applicant shall stand denied.

Decided: August 29, 1980.

By the Commission, Review Board Number 5, Members, Krock, Taylor, and Williams. (Member Williams not participating).

Decided: September 12, 1980.

By the Commission, RB #5, members Krock, Taylor and Williams (In MC–F–14469F, 14470F and 14473F Board member Taylor not participating). (In MDC–14472F, 14475F, and 14475F, and 14476F Board membert Williams not participating.)

MC–F–14475F, filed September 3, 1980. POLYMER EXPRESS, INC. (Polymer) (25555 Avenue Standord, Valencia, CA 91355)—purchase (portion)—FREYMILLER TRUCKING, INC. (Freymiller) (Box 216, Shullsberg, WI 53586). Representative: William Davidson, 2455 East 27th St., Vernon, CA 90058. Polymer seeks authority to purchase a portion of the interstate operating rights of Freymiller. S. H. Scully, L. A. Scully, and R. J. each control 33% of the capital stock of Polymer. L. A. Scully who joined in the application, seeks authority to control said rights through the transaction. S. H. Scully and R. J. Scully, who did not join the application will be required as a condition to the approval. Polymer is purchasing that portion of Freymiller's permit in MC 138413 (Sub-8), which authorizes the transportation of (1) *scrap plastic* (except in bulk), from points in the United States on the east of U.S. Hwy 85 to Valencia, CA, (2) *plastic sheeting,* from Newcomerstown, OH, to Valencia, CA, (3) *plastic granules* (except commodities in bulk), from Farmingdale, NY, Paterson, NJ, and Kingsport, TN, to Valencia, CA, (4) *paper,* from Brownville, NY, to Valencia, CA, and (5) *plastic sheeting,* from Valencia, CA, to points in the United States on and east of U.S. Hwy 85, under a continuing contract with Lustro Plastics Co., of Valencia, CA. Polymer presently holds no authority from the Interstate Commerce Commission. L. A. Scully, S. H. Scully and R. J. Scully who control Polymer, also control Valencia Trucking. Valencia Trucking is a common carrier pursuant to a certificate authorized in MC 134672 (Sub-1), which authorizes the transportation of *general commodities,* usual exceptions, between Valencia, CA, and Los Angeles. Impediment: Authorization and approval of this transaction is conditioned upon the prior receipt by the Commission of an affidavit from S. H. Scully and R. J. Scully who each own 33% of Polymer, stating that they do control 33 percent and that they join in this application. (Hearing site: Los Angeles, CA.)

Note.—An application for temporary authority has been filed.

MC–F–14476F, filed September 4, 1980. JOHN DOTSETH TRUCKING, INC. (JDT) (Route 6, Menomonie, WI 54751)—purchase (portion)—DOTSETH TRUCK LINE, INC. (Dotseth Truck) (Knapp, WI 54749). Representative: Bradford E. Kistler. P.O Box 82028, Lincoln, NE

68501. JDT seeks authority to purchase a portion of the interstate operating rights of Dotseth Truck. John Dotseth, the sole stockholder of JDT, seeks authority to acquire control of said rights through the transaction. Dotseth Truck has authority in MC 20992 to transport *general commodities* (except those of unusual value, classes A and B explosives, commodities in bulk, and those requiring special equipment), between points in Stanton, Lucas, Menomonie, Sherman, Tiffany, and Hay River Townships, Dunn County, WI, and Cady and Springfield Townships, St Croix County, WI, on the one hand, and, on the other, South St. Paul, St. Paul, Minneapolis, Hastings, and Stillwater, MN. JDT is purchasing that portion of Dotseth Trucks certificate in MC 20992 which authorized the transportation of *general commodities* (except those of unusual value, classes A and B explosives, commodities in bulk, and those requiring special equipment), between points in Menomonie, Sherman, Tiffany, and Hay River Townships, Dunn County, WI, on the one hand, and, on the other, St. Paul, South St. Paul, Minneapolis, Hastings, and Stillwater, MN. Dotseth Truck is retaining authority to transport *general commodities* (except those of unusual value, classes A and B explosives, commodities in bulk, and those requiring special equipment), between points in Stanton, and Lucas, WI, and Springfield and Cady Townships, St. Croix County, WI, on the one hand, and, on the other, South St. Paul, St. Paul, Minneapolis, Hastings, and Stillwater, MN. DMT presently only holds temporary authority in MC 141246. John Dotseth, who controls DMT, also controls Schuster Transport through sole stock ownership. Schuster is authorized to operate pursuant to certificates issued in MC 129872 and sub-numbers thereunder. John Dotseth also owns approximately 36 percent of the stock of Dotseth Truck. (Hearing site: Minneapolis, MN.)

MC-F-14472F, filed August 27, 1980. MOTOR EXPRESS, INC. OF INDIANA (MXI) (1440 West 34th Street, Chicago, IL 60608)—purchase (portion)—MOTOR EXPRESS, INC. (MX) (1375 Euclid Avenue, One Playhouse Square, Cleveland, OH 44115); and THE CLEVELAND, COLUMBUS & CINCINNATI HIGHWAY, INC. (CCC)—merger—MOTOR EXPRESS, INC. (MX) (both of 1375 Euclid Avenue, One Playhouse Square, Cleveland, OH 44115). Representative: John C. Bradley, Suite 1301, 1600 Wilson Blvd., Arlington, VA 22209. MXI seeks authority to purchase a portion of the interstate operating rights of MX. Concurrently, CCC seeks authority to merge MX and the remaining interstate operating rights of MX into CCC for ownership, management and operation. U.S. Truck Lines, Inc. of Delaware (USTL), a publicly held non-carrier holding company and the sole stockholder of MXI, CCC, and MX, seeks authority to acquire control of said rights through these transactions. MXI is purchasing that portion of MX's authority in Certificate MC 3420, as follows: *General Commodities* (except liquids in bulk, in tank trucks, household goods as defined by the Commission, Classes A and B explosives, green hides, livestock, money, valuabe documents and papers, postage stamps, letters, precious stones, and other articles of extraordinary value, articles inherently injurious to other freight and carrier equipment, and commodities not suitable to motor transportation by reason of weight limitations or otherwise), over regular routes, (1) between Cleveland and Toledo, OH: from Cleveland over US Hwy 20 to junction OH Hwy 120, then over OH Hwy 120 to junction Business Route US Hwy 20, then over Business Route US Hwy 20 to Toledo, and return over the same route; (2) between Cleveland and Canton, OH, over OH Hwy 8; (3) between Cleveland and Youngstown, OH, over US Hwy 422; (4) between Akron, OH, and Pittsburgh, PA: from Akron over OH Hwy 241 to Massillon, OH, then over US Hwy 30 to Pittsburgh, and return over the same route; (5) between Canton and Youngstown, OH, over OH Hwy 62; (6) between Akron and Youngstown, OH, over OH Hwy 18; and between Warren and Barberton, OH, over OH Hwy 5; serving in connecton with routes (1) through (6) above all intermediate points and the following off-route points: all points within 10 miles of Canton, Elyria, Warren, and Youngstown, OH, and all points within 5 miles of Fremont, OH. Concurrently with the transaction stated above, CCC will merge MX's remaining authority into CCC. The authority to be merged is as follows: MC 3420, Regular Routes: (A) *General commodities* (except those of unusual value, classes A and B explosives, livestock, household goods as defined by the Commission, commodities in bulk, and those requiring special equipment), (1) Between Niles, OH, and junction OH Hwy 46 and 18, serving all intermediate points,over OH Hwy 46. (2) between Warren, OH, and OH-PA State line, serving all intermediate points, over OH Hwy 82. (3) Between Montrose and Massillon, OH, serving no intermediate points, over US Hwy 21. (4) Between junction PA Hwys 51 and 837, and Pittsburgh, PA, serving all intermediate points, over Pennsylvania Highway 51. (5) Between junction U.S. Hwy 422 and PA Hwy 65 and Rochester, PA, serving all intermediate points, over PA Hwy 65. (6) Between Butler and Ebensburg, PA, serving no intermediate points, over U.S. Hwy 422. (B) *General commodities* (except liquids in bulk, in tank trucks, household goods as defined by the Commission, Classes A and B explosives, green hides, livestock, money, valuable documents papers, postage stamps, letters, precious stones, and other articles of extraordinary value, articles inherently injurious to other freight and carrier equipment, and commodities not suitable to motor transportation by reason of weight limitations or otherwise), (1) between Buffalo, NY, and West Springfield, PA: From Buffalo over NY Hwy 5 to the NY-PA State line, then over PA Hwy 5 to West Springfield, and return over the same route. (2) Between Buffalo, NY, and Cleveland, OH: From Buffalo over U.S. Hwy 62 to junction U.S. Hwy 20, then over U.S. Hwy 20 to Celveland and return over the same route. (3) Between Canton, OH, and Wheeling, WV: From Canton over OH Hwy 800 to Dover, OH, then over U.S. Hwy 250 to Wheeling, and return over the same route. (4) Between Cleveland, OH, and Donora, PA: From Cleveland over OH Hwy 14 to junction OH Hwy 14A, then over OH Hwy 14A to junction OH Hwy 14, then over OH Hwy 14 to the OH-PA State line, then over PA Hwy 51 to junction PA Hwy 837 to Donora, and return over the same route. (5) Between Youngstown, OH, and Butler, PA over U.S. Highway 422. (6) Between Pittsburgh, PA, and Greensburg, PA, over U.S. Hwy 30. (7) Between Canton, OH, and Apollo, PA: From Canton over OH Hwy 43 to Wintersville, OH, then over U.S. Hwy 22 to Pittsburgh, PA, then over PA Hwy 28 to New Kensington, PA, and then over PA Hwy 56 to Apollo and return over the same route. (8) Between Youngstown, OH, and Franklin, PA; over U.S. Highway 62. (9) Between East Liverpool, OH, and Pittsburgh, PA: From East Liverpool over OH Hwy 39 to the OH-PA State line, then over PA Hwy 68 to Rochester, PA, and then over PA Hwy 65 to Pittsburgh, and return over the same route. (10) Between Pittsburgh and Erie, PA, over U.S. Highway 19. (11) Between Ohio points, as follows: (a) From Toledo over OH Hwy 2 to Venice, then over U.S. Hwy 6 to Montville, and return over the same route. (b) From Clyde over OH Hwy 101 to Sandusky, and return over the same route. (c) From Lorain over OH Hwy 611 to Avon, and return over the same route. (d) From Lorain over OH Hwy 57 to Medina, then

over OH Hwy 18 to Akron, and return over the same route. (e) From Bay Village over OH Hwy 252 to North Olmsted, and return over the same route. (f) From Medina over OH Hwy 3 to Seville, and return over the same route. (g) From Cleveland over OH Hwy 254 to Amherst, and return over the same route. (h) From Cleveland over OH Hwy 10 to junction U.S. Hwy 20, and return over the same route (i) From Cleveland over U.S Hwy 21 to Montrose, and return over the same route. (j) From Cleveland over U.S. Hwy 322 to Williamsfield, and return over the same route. (k) From Cleveland over OH Hwy 283 to Painesville, then over OH Hwy 84 to Ashtabula, and return over the same route. (l) From Ashtabula over OH Hwy 46 to Miles, and return over the same route. (m) From Ashtabula over unnumbered hwy to Austinburg, then over OH Hwy 45 to Warren, and then over OH Hwy 169 to junction U.S. Highway 422, and return over the same route. (n) From Madison-on-the-Lake over unnumbered hwy to North Madison, then over the OH Hwy 528 to junction OH Hwy 307, then over OH Hwy 307 to Dorset, and then over OH Hwy 193 to Cherry Valley, and then over US Hwy 6 to Andover, and return over the same route. (o) From Geneva-on-the-Lake over OH Hwy 534 to Harpersfield, and return over the same route. (p) From Novelty over OH Hwy 306 to junction U.S. Hwy 20, and return over the same route. (q) From Wickliffe over OH Hwy 84 to junction U.S. Hwy 6, and return over the same route. (r) From Lakemore over OH Hwy 91 to junction U.S. Hwy 20, and return over the same route. (s) From Painesville over OH Hwy 44 to junction OH Hwy 87, then over OH Hwy 87 to Bloomfield, and return over the same route. (t) From Conneaut over OH Hwy 7 to Kinsman, then over OH Hwy 5 to Warren and return over the same route. (u) From Parkman over OH Hwy 88 to Vernon, and return over the same route. (v) From Lodi over U.S. Highway 224 to Berlin Center, then over OH Hwy 534 to Damascus, and return over the same route. (w) From Akron over unnumbered hwy via East Liberty, to Greensburg, and return over the same route. (x) From Greensburg over unnumbered hwy to Greentown, and return over the same route. (y) From Harrisburg over OH Hwy 173 to Beloit, then over unnumbered highway to junction U.S. Hwy 62, and return over the same route. (z) From Alliance over OH Hwy 183 to Atwater Center, and return over the same route. (aa) From Alliance over OH Hwy 619 via Marlboro, to junction OH Hwy 44, to and return over the same route. (bb) From Canton over OH Hwy 153 to Louisville, then over OH Hwy 44 to Ravenna, and return over the same route. (cc) From Youngstown over OH Hwy 7 to Bridgeport, and return over the same route. (dd) From Youngstown over OH Hwy 90 to junction OH Hwy 170, then over OH Hwy 170 to Unity, and return over the same route. (12) Between Pennsylvania points, as follows: (a) From Pittsburgh over PA Hwy 8 to Erie, and return over the same route. (b) From Jeadville over U.S. Hwy 322 to Franklin, and return over the same route. (c) From Rochester over PA Hwy 18 to junction U.S. Hwy 62, and return over the same route. (d) From Mercer over PA Hwy 58 to Harrisville, and return over the same route. (e) From Butler over PA Hwy 68 to Zelienople, then over PA Hwy 288 to Chewton, and return over the same route. (f) From Portersville over PA Hwy 488 to Ellwood City, and return over the same route. Service under (B) above is authorized to and from all intermediate points and the following off-route points: All points in Cayahoga County, OH, except Cleveland; All points within 30 miles of Pittsburgh, PA; The following points in New York within 15 miles of Buffalo: Angola, Blasdell, Depew, Hamburg, Lackawanna, and Lancaster, and all points in the township of Amherst, Cheektowaga, Tonawanda (excluding the city of Tonawanda), and West Senecca; All ponts within 10 miles of Ashtabula, Alliance, Chardon, Geneva, Hudson, Lorain, Massillon, Medina, Painesville. Salem, and Sandusky, OH, Erie, Oil City, and Sharon, PA, and Dunkirk, NY. All points within 15 miles of Colebrook, OH, and Beaver Falls, PA; All points within 5 miles of Bellevue, Conneaut, Clyde, Columbiana, East Liverpool, Horwalk, Ravenna, Steubenville, and Toledo, OH, Wheeling, WV, Butler, Franklin, Gizard, Mercer, and New Castle, PA; Restriction: The service authorized herein is subject to the following conditions. The authority granted herein is restricted against the transportation of shipments between Pittsburgh, PA, and points within 30 miles of Pittsburgh, on the one hand, and, on the other, Wheeling, WV, and points in its commercial zone as defined by the Commission.

MC 3420 (Sub-3), Regular Routes: *General commodities,* (except liquids in bulk, in tank trucks, and except household goods as defined in *Practices of Motor Common Carriers of Household Goods,* 17 M.C.C. 467, dangerous explosives, green hides, livestock, money valuable documents and papers, postage stamps, letters, precious stones, and other articles of extraordinary value, articles inherently injurious to other freight and carrier equipment, and commodities not suitable to motor transportation by reason of weight limitations or otherwise), over an alternate regular route for operating convenience only in connection with said carrier's presently authorized routes between same termini. Between junction OH Hwy 18 and OH Hwy 57 at Mallet Creek, OH, and Norwalk, OH: From junction Ohio Highway 18 over OH Hwy 18 to OH Hwy 57 at Mallet Creek and Norwalk, and return over the same route. Service is not authorized to or from intermediate points. MC 3420 (Sub-6), Irregular Routes: (A) *General commodities,* (except those of unusual value, livestock, household goods as defined by the Commission, commodities in bulk, and those requiring special equipment), Between Buffalo, NY, on the one hand, and on the other, points in Erie and Niagara Counties, NY, (except Depew, Lancaster, and Cheektowaga, NY). (B) *General commodities,* (except those of unusual value, Classes A and B explosives, household goods as defined by the Commission, commodities in bulk, commodities requiring special equipment), Between Buffalo, Depew, Lancaster, and Chocktowaga, NY. MXI is a motor common carrier pursuant to authority issued in MC–28813 and sub-numbers thereunder, which authorize principally the transportation of general commodities, over regular routes, in WI, IL, IN, and OH. CCC is a motor common carrier pursuant to authority issued in MC–3419 and sub-numbers thereunder, which authorize the transportation of general commodities in IN, PA, KY, and OH. Among a number of transportation-industry oriented subsidiaries, USTL, through stock ownership, controls certain other motor common carriers of general commodities operating principally over regular routes, namely: (1) Central Truck Lines, Tampa, FL (MC–36473, which serves routes points in FL, AL, MS, LA, GA, and OH; (2) Mercury Freight Lines, Inc., Mobile, AL (MC 113528), which serves points in AL, FL, GA, NC, SC, MS, LA, and TX; (3) Brown Express, Inc., San Antonio, TX (MC 46054), which serves points in eastern TX; and (4) Be-Mac Transport Company, Inc., St. Louis, MO (MC–10872), which serves points in TX, OK, MO, IL, WI, IN, and MI. USTL also controls through stock ownership, Motor Express, Inc. (NJ) (MC 1778); National Tank Truck Delivery, Inc. (MC 116132); Kanawha Cartage Company (MC 150148); and Ohio Delivery, Inc. (MC 142758).

MC–F–14469F, filed August 28, 1980. SMITH DRAY LINE & STORAGE CO.,

INC, (Smith) (116–120 N. Markley Street, Greenville, SC 29602)—purchase (portion)—EASTERN TRANSIT AND STORAGE, INC. (Eastern) (Charlotte, NC) (K.T.I., LTD), (KTI), 4700 Benson Avenue, Baltimore, MD 21227—assignor). Representative: Robert J. Gallagher, Suite 1112, 1000 Connecticut Ave., NW, Washington, DC 20036, and Henry P. Willimon, P.O. Box 1075, Greenville, SC 29602. Smith seeks authority to purchase a portion of the interstate operating rights of Eastern. W. Newton Turrentine and William S. Newton control Smith through stock ownership. Smith is purchasing that portion of the interstate operating rights contained in a certificate issued to Eastern in MC–11020, which authorizes the transportation of *household goods,* as defined by the Commission, between Spartanburg, SC, and points in NC, SC, and GA, within 125 miles of Spartanburg, SC, on the one hand, and, on the other, points in VA, MD, DE, PA, NJ, NY, CT, MA, RI, OH, and DC. Smith is authorized to operate as a motor common carrier pursuant to certificate issued in MC 6774. Condition: Authorization and approval of this transaction in subject to the concurrent consummation of the transaction in MC–F–14280, *K.T.I., LTD—purchase (portion)—EASTERN TRANSIT AND STORAGE, INC,* and subject to the condition that the rights being sold to Smith in this transaction, MC–F–14469F, be deleted from the rights which have been authorized to be purchased by KTI in MC–F–14280F. Impediments: (1) Authorization and approval of this transaction is conditioned upon the prior receipt by the Commission of an affidavit from W. Newton Turrentine and William S. Newton stating that they jointly contol Smith and that they join in this application. (2) The Addendum to the Agreement between KTI and Eastern in MC–F–14280 stipulates that KTI has the right to assign a portion of said rights if the two applications are filed simultaneously. This was not done. The agreement also stipulates that the purchaser of the assigned rights be a non-carrier. In this proceeding, the transferee is a motor common carrier. Consequently, authorization and approval of this transaction is also conditioned upon the Commission receiving from Eastern an acceptance of this transaction.

Notes.—(1) Application for temporary authority has been filed. (2) In MC–F–14280F, KTI is purchasing a portion of the interstate operating rights of Eastern. In this application, MC–F–14469F, KTI has assigned a portion of said rights to Smith.

MC–F–14473F, filed September 2, 1980. JAMES BRUCE LEE AND STANLEY LEE, a partnership, d.b.a. LEE CONTRACT CARRIERS (Lee) (P.O. Box 48, Old Route 66, Pontiac, IL 61764)—Control—PONTIAC CONTRACT CARRIER, INC. (Pontiac) (P.O. Box 198, 1505 North Main, Pontiac, IL 61764). Representative: Edward F. Stanula, 837 East 162nd Street, South Holland, IL 60473. Lee seeks authority to acquire control of Pontiac through the purchase by Lee of all the issued and outstanding capital stock of Pontiac. The interstate operating rights to be controlled are contained in Permit No. MC 129217, which authorizes the transportation, as a contract carrier, over irregular routes, of *lawn, weed, and brush mowing equipment, and accessories, parts, materials, tools, and supplies* used in the manufacture, processing, or sale of lawn, weed, and brush mowing equipment, (except commodities in bulk), (a) between Pontiac, IL, on the one hand, and, on the other, points in AL, AZ, AR, CO, DE, FL, GA, IN, IA, KS, LA, MD, MA, MI, MN, MS, MO, NE, NJ, NY, NC, OH, OK, PA, SC, SD, TN, TX, VA, WI, and DC, and (b) from Pontiac, IL, to points in CA, OR, and WA, under continuing contract(s) in (a) and (b) above with Roof Manufacturing Co., of Pontiac, IL. Lee is authorized to operate as a motor contract carrier pursuant to permits issued in MC 136848 and sub-numbers thereunder.

MC–F–14470F, filed August 28, 1980. EXCEL TRANSPORTATION SERVICE CO. (Excel) (500 Skokie Blvd, Northbrook, IL 60062)—Control—RMK TRUCKING, INC. (RMK) (500 Skokie Blvd, Northbrook, IL 60062) and BADGER FREIGHTWAYS, INC. (Badger) (P.O. Box 1008, 1317 N. 25th St., Sheboygan, WI 53021). Representative: Edward G. Bazelon, 39 South LaSalle Street, Chicago, IL 60603. Excel seeks to acquire control of RMK and Badger through the purchase of all issued and outstanding capital stock. Nicholas Darzen, the sole stockholder of Excel, seeks authority to acquire control of said rights through the transaction. RMK is authorized to operate as a motor contract carrier pursuant to authority issued in MC 138466 (Sub-1), authorizing the transportation over irregular routes of (1) *corrugated paper products,* from the plantsite of The Mead Corporation at Covington, GA, to points in AL, FL, KY, MS, NC, SC, and TN, and (2) *interior packing forms,* from the plantsite of The Mead Corporation, Container Division at Atlanta, GA, to points in AL, GA, KY, MA, NC, SC, and TN. Badger is authorized to operate as a motor common carrier pursuant to authority issued in MC 20356 and sub-numbers thereunder, authorizing the transportation (a) over regular routes, of *general commodities* (except those of unusual value, classes A and B explosives, household goods as defined by the Commission, commodities in bulk, and those requiring special equipment), (1) between Baileys Harbor, WI, and Chicago, IL, and (2) between Wausau, WI, and Chicago, IL, and alternate routes for operating convenience only: (1) between junction U.S. Hwy 141 and WI Hwy 57 and junction WI Hwy 144 and U.S. Hwy 141, (2) between Chicago, IL, and the junction of Eden's Expressway and U.S. Hwy 41 north of Lake Avenue, (3) serving the site of Cooper-Jarrett, Inc., terminal on Frontage Rd, in connection with carrier presently authorized regular routes, and (4) between Wausau, WI, and Oshkosh, WI, and (b) irregular routes, (1) *fruit,* from points in Door County, WI, to St. Louis, MO, and points in IL, IA, and MN, and (2) *granite,* between Wausau, WI, on the one hand, and, on the other, points in that part of IL north of a line beginning at Rock Island, IL, and extending along U.S. Hwy 6 to Joliet, IL, and then along U.S. Hwy 30 to the IL–IN state line, including points on the indicated portions of the Hwys specified. Excel presently holds no authority from the Interstate Commerce Commission. (Hearing site: Chicago, IL.)

Note.—An application for temporary authority has been filed.

Agatha L. Mergenovich,

Secretary.

[FR Doc. 80–29494 Filed 9–23–80; 8:45 am]

BILLING CODE 7035–01–M

[Volume No. 339]

Motor Carriers; Permanent Authority Decisions

Decided: September 17, 1980.

The following applications, filed on or after March 1, 1979, are governed by Special Rule 247 of the Commission's *Rules of Practice* (49 CFR 1100.247. These rules provide, among other things, that a petition for intervention, either in support of or in opposition to the granting of an application, must be filed with the Commission within 30 days after the date notice of the application is published in the **Federal Register.** Protests (such as were allowed to filings prior to March 1, 1979) *will be rejected.* A petition for intervention without leave must comply with Rule 247(k) which requires petitioner to demonstrate that it (1) holds operating authority permitting performance of any of the service which the applicant seeks authority to perform, (2) has the necessary equipment and

facilities for performing that service, and (3) has performed service within the scope of the application either (a) for those supporting the application, or, (b) where the service is not limited to the facilities of particular shippers, from and to, or between, any of the involved points.

Persons unable to intervene under Rule 247(k) may file a petition for leave to intervene under Rule 247(l) setting forth the specific grounds upon which it is made, including a detailed statement of petitioner's interest, the particular facts, matters, and things relied upon, including the extent, if any, to which petitioner (a) has solicited the traffic or business of those supporting the application, or, (b) where the identity of those supporting the application is not included in the published application notice, has solicited traffic or business identical to any part of that sought by applicant within the affected marketplace. The Commission will also consider (a) the nature and extent of the property, financial, or other interest of the petitioner, (b) the effect of the decision which may be rendered upon petitioner's interest, (c) the availability of other means by which the petitioner's interest might be protected, (d) the extent to which petitioner's interest will be represented by other parties, (e) the extent to which petitioner's participation may reasonably be expected to assist in the development of a sound record, and (f) the extent to which participation by the petitioner would broaden the issues or delay the proceeding.

Petitions not in reasonable compliance with the requirements of the rule may be rejected. An original and one copy of the petition to intervene shall be filed with the Commission indicating the specific rule under which the petition to intervene is being filed, and a copy shall be served concurrently upon applicant's representative, or upon applicant if no representative is named.

Section 247(f) provides, in part, that an applicant which does not intend to timely prosecute its application shall promptly request that it be dismissed, and that failure to prosecute an application under the procedures of the Commission will result in its dismissal.

If an applicant has introduced rates as an issue it is noted. Upon request, an applicant must provide a copy of the tentative rate schedule to any protestant.

Further processing steps will be by Commission notice, decision, or letter which will be served on each party of record. *Broadening amendments will not be accepted after the date of this publication.*

Any authority granted may reflect administrative acceptable restrictive amendments to the service proposed below. Some of the applications may have been modified to conform to the Commission's policy of simplifying grants of operating authority.

Finding

With the exception of those applications involving duly noted problems (e.gs., unresolved common control, unresolved fitness questions, and jurisdictional problems) we find, preliminarily, that each common carrier applicant has demonstrated that its proposed service is required by the present and future public convenience and necessity, and that each contract carrier applicant qualifies as a contract carrier and its proposed contract carrier service will be consistent with the public interest and the transportation policy of 49 U.S.C. § 10101. Each applicant is fit, willing, and able properly to perform the service proposed and to conform to the requirements of Title 49, Subtitle IV, United States Code, and the Commission's regulation. Except where specifically noted, this decision is neither a major Federal action significantly affecting the quality of the human environment nor a major regulatory action under the Energy Policy and Conservation Act of 1975.

In those proceedings containing a statement or note that dual operations are or may be involved we find, preliminarily and in the absence of the issue being raised by a petitioner, that the proposed dual operations are consistent with the public interest and the transporation policy of 49 U.S.C. § 10101 subject to the right of the Commission, which is expressly reserved, to impose such terms, conditions or limitations as it finds necessary to insure that applicant's operations shall conform to the provisions of 49 U.S.C. § 10930(a) [formerly section 210 of the Interstate Commerce Act.]

In the absence of legally sufficient petitions for intervention filed within 30 days of publication of this decision-notice (or, if the application later becomes unopposed), appropriate authority will be issued to each applicant (except those with duly noted problems) upon compliance with certain requirements which will be set forth in a notification of effectiveness of the decision-notice. To the extent that the authority sought below may duplicate an applicant's other authority, such duplication shall be construed as conferring only a single operating right.

Applicants must comply with all specific conditions set forth in the following decision-notice within 30 days after publication, or the application shall stand denied.

By the Commission, Review Board Number 2, Members Chandler, Eaton, and Liberman.

Agatha L. Mergenovich,

Secretary.

Note.—All applications are for authority to operate as a common carrier, by motor vehicle, in interstate or foreign commerce, over irregulary routes, except as otherwise noted.

MC 148425 (Sub-2F), filed June 30, 1980, previously noticed in the **Federal Register** on August 28, 1980, as MC 148425 (Sub-1F). Applicant: SUNDANCE STAGE LINES, INC., 5920 Mission Gorge Rd., San Diego, CA 92120. Representative: Roger Curtis McKee, 110 West "C" St., Suite 1803, San Diego, CA 92101.

Note.—This republication correctly states the docket number and sub number, which is MC 148425 (Sub-2F).

MC 151825F, filed June 9, 1980. Applicant: ROBERT DAVID ELLIS, d.b.a. ELLIS TRANSPORT, 119 Sheffield Ave., New Haven, CT 06511. Representative: Frederic D. Krupp, 152 Temple St., New Haven, CT 06510. Transporting passengers and their baggage in the same vehicle with passengers, in round-trip special and charter operations, beginning and ending at points in CT, and extending to points in the U.S.

[FR Doc. 80-29486 Filed 9-23-80; 8:45 am]

BILLING CODE 7035-01-M

Motor Carriers; Permanent Authority Decisions; Decision-Notice

The following applications, filed on or after July 3, 1980, are governed by Special Rule 247 of the Commission's Rules of Practice, see 49 CFR 1100.247. Special rule 247 was published in the **Federal Register** on July 3, 1980, at 45 FR 45539.

Persons wishing to oppose an application must follow the rules under 49 CFR 1100.247(B). Applications may be protested *only* on the grounds that applicant is not fit, willing, and able to provide the transportation service and to comply with the appropriate statutes and Commission regulations. A copy of any application, together with applicant's supporting evidence, can be obtained from any applicant upon request and payment to applicant of $10.00.

Amendments to the request for authority are not allowed. Some of the applications may have been modified prior to publication to conform to the Commission's policy of simplifying grants of operating authority.

Findings

With the exception of those applications involving duly noted problems (e.gs., unresolved common control, fitness, water carrier dual operations, or jurisdictional questions) we find, preliminarily, that each applicant has demonstrated its proposed service warrants a grant of the application under the governing section of the Interstate Commerce Act. Each applicant is fit, willing, and able to perform the service proposed, and to conform to the requirements of Title 49, Subtitle IV, United States Code, and the Commission's regulations. Except where noted, this decision is neither a major Federal action significantly affecting the quality of the human environment nor a major regulatory action under the Energy Policy and Conservation Act of 1975.

In the absence of legally sufficient protests in the form of verified statements filed on or before November 10, 1980 (or, if the application later becomes unopposed) appropriate authority will be issued to each applicant (except those with duly noted problems) upon compliance with certain requirements which will be set forth in a notice that the decision-notice is effective. On or before November 24, 1980, an applicant may file a verified statement in rebuttal to any statement in opposition.

To the extent that any of the authority granted may duplicate an applicant's other authority, the duplication shall be construed as conferring only a single operating right.

Note.—All applications are for authority to operate as a motor common carrier in interstate or foreign commerce over irregular routes, unless noted otherwise. Applications for motor contract carrier authority are those where service is for a named shipper "under contract."

Volume No. OPI–036

Decided: September 17, 1980.

By the Commission. Review Board Number 1, Members Carleton, Joyce and Jones.

MC 531 (Sub-451F), filed September 12, 1980. Applicant: YOUNGER BROTHERS, INC., 4909 Griggs Road, P.O. Box 14048, Houston, TX 77021. Representative: E. Stephen Heisley, 805 McLachlen Bank Bldg., 666 Eleventh St., N.W., Washington, DC 20001. Transporting *general commodities* (except used household goods, hazardous or secret materials, and sensitive weapons and munitions), for the United States Government, between points in the U.S.

MC 94201 (Sub-195F), filed September 8, 1980. Applicant: BOWMAN TRANSPORTATION, INC., P.O. Box 17744, Atlanta, GA 30316. Representative: Charles Ephraim, Suite 406, 918 16th St., N.W., Washington, DC 20006. Transporting *shipments weighing 100 pounds or less* if transported in a motor vehicle in which no one package exceeds 100 pounds, between points in the U.S.

MC 109891 (Sub-50F), filed September 11, 1980. Applicant: INFINGER TRANSPORTATION COMPANY, INC., 2811 Carner Ave., P.O. Box 7698, Charleston Heights, SC 29405. Representative: Frank B. Hand, Jr., 521 South Cameron St., Winchester, VA 22601. Transporting *general commodities* (except used household goods, hazardous or secret materials, and sensitive weapons and munitions), for the United States Government, between points in the U.S.

MC 131011F, filed September 8, 1980. Applicant: VELMA L. DEMPSEY d.b.a. ALPHA-OMEGA BROKERAGE CO., P.O. Box 3948, Irving, TX 75061. Representative: Billy R. Reid, 1721 Carl St., Forth Worth, TX 76103. As a *broker*, in arranging for the transportation of *general commodities* (except household goods), between points in the U.S.

MC 131021F, filed September 10, 1980. Applicant: OLIVER TRUCKING CORP., 2203 West Oliver St., Indianapolis, IN 46231. Representative: Morton E. Kiel, Suite 1832, 2 World Trade Center, New York, NY 10048. As a *broker*, in arranging for the transportation of *general commodities* (except household goods), between points in the U.S.

MC 143720 (Sub-5F), filed September 10, 1980. Applicant: AIRFREIGHT SERVICES, INC., P.O. Box 137, 3 Choice Rd., Windsor Locks, CT 06096. Representative: Gerald A. Joseloff, P.O. Box 3258, Hartford, CT 06103. Transporting *shipments weighing 100 pounds or less*, if transported in a motor vehicle in which no one package exceeds 100 pounds, between points in the U.S.

MC 151060 (Sub-1F), filed September 12, 1980. Applicant: DIEHL LUMBER TRANSPORTATION CO., a corporation, 1885 South 900 West, Salt Lake City, UT 84104. Representative: Irene Warr, 430 Judge Bldg., Salt Lake City, UT 84111. Transporting *general commodities* (except used houshold goods, hazardous or secret materials, and sensitive weapons and munitions), for the United States Government, between points in the U.S.

MC 151831F, filed September 12, 1980. Applicant: J. W. ANDERSON, 1407 Juanita Dr., Mt. Vernon, MO 65712. Representative: J. W. Anderson (same address as applicant). Transporting *food and other edible products (including edible byproducts but excluding alcoholic beverages and drugs) intended for human consumption, agricultural limestone and other soil conditioners, and agricultural fertilizers*, if such transportaiton is provided with the owner of the motor vehicle in such vehicle, except in emergency situations, between points in the U.S.

Volume No. OP1–037

Decided: September 17, 1980.

By the Commission, Review Board Number 2, Members Chandler, Eaton and Liberman.

MC 29910 (Sub-281F) (partial republication), filed July 29, 1980, and previously noticed in **Federal Register** issue of August 20, 1980. Applicant: ARKANSAS-BEST FREIGHT SYSTEM, INC., 301 South 11th St., Fort Smith, AR 72901. Representative: Don A. Smith, P.O. Box 43, 510 North Greenwood Ave., Fort Smith, AR 72902. Transporting *general commodities* (except those of unusual value, household goods as defined by the Commission, commodities in bulk, and those requiring special equipment), (25) between Price, UT, and Grand Junction, CO, over U.S. Hwy 50, serving all intermediate points and all off-route points within 10 miles of the indicated portion of the specified Hwy (except Sunnyside, Sunnydale, Columbia, Dragerton, and Horse Canyon, UT).

Note.—The purpose of this partial republication is to show the correct territory requested in route (25). The rest of the original publication of August 20, 1980, remains the same.

Volume No. OP3–020

Decided: September 15, 1980.

By the Commission, Review Board Number 2, Members Chandler, Eaton and Liberman.

MC 3854 (Sub-59F), filed September 5, 1980. Applicant: BURTON LINES, INC., P.O. Box 11306, E. Durham Station, Durham, NC 27703. Representative: Lawrence E. Lindeman, 425 13th St., N.W., Suite 1032, Washington, DC 20004. Transporting *general commodities* (except used household goods, hazardous or secret materials and sensitive weapons and munitions), for the U.S. Government, between points in the U.S.

MC 14314 (Sub-41F), filed September 2, 1980. Applicant: DUFF TRUCK LINE, INC., P.O. Box 359, Broadway and Vine Sts., Lima, OH 45802. Representative: R. L. Anderhalt, Jr. (same address as applicant). Transporting *general commodities* (except used household goods, hazardous or secret materials, and sensitive weapons and munitions),

for the U.S. Government, between points in the U.S.

MC 29555 (Sub-108F), filed August 26, 1980. Applicant: BRIGGS TRANSPORTATION CO., a corporation, N–400 Griggs-Midway Bldg., St. Paul, MN 55104. Representative: Winston W. Hurd (same address as applicant). Transporting *general commodities* (except used household goods, hazardous or secret materials, and sensitive weapons and munitions), for the U.S. Government, between points in the U.S.

MC 108835 (Sub-54F), filed August 25, 1980. Applicant: HYMAN FREIGHTWAYS, INC., 2380 Wycliff, St. Paul, MN 55114. Representative: Rodney L. Trocke, 2690 N. Prior Ave., Roseville, MN 55113. Transporting *general commodities* (except used household goods, hazardous or secret materials, and sensitive weapons and munitions), for the U.S. Government, between points in the U.S.

MC 116365 (Sub-2F), filed August 28, 1980. Applicant: COMMODORE MOTOR LINES, INC., 440 Florida Grove Rd., Perth Amboy, NJ 08861. Representative: Arthur J. Piken, Queens Office Tower, 95–25 Queens Blvd., Rego Park, NY 11374. Transporting *general commodities* (except used household goods, hazardous or secret materials, and sensitive weapons and munitions), for the United States Government, between points in the U.S.

MC 124004 (Sub-62F), filed September 5, 1980. Applicant: RICHARD DAHN, INC., 620 West Mountain Rd., Sparta, NJ 07871. Representative: George A. Olsen, P.O. Box 357, Gladstone, NJ 07934. Transporting *general commodities* (except used household goods, hazardous or secret materials, and sensitive weapons and munitions), for the U.S. Government, between points in the U.S.

MC 127974 (Sub-26F), filed August 19, 1980. Applicant: P. LIEDTKA TRUCKING INC., 110 Patterson Ave., Trenton, NJ 08610. Representative: Alan Kahn, 1430 Land Title Bldg., Philadelphia, PA 19110. Transporting *general commodities* (except used household goods, hazardous or secret materials, and sensitive weapons and munitions), for the U.S. Government, between points in the U.S.

MC 135614 (Sub-3F), filed September 2, 1980. Applicant: ESKELIN, INC., 4604 Wornall Rd., Kansas City, MO 64112. Representative: Herbert V. Eskelin (same address as applicant). Transporting *shipments weighing 100 pounds or less* if transported in a motor vehicle in which no one package exceeds 100 pounds, between points in the U.S.

MC 145485 (Sub-3F), filed September 5, 1980. Applicant: DAVIS CARTAGE COMPANY, a corporation, P.O. Box 96, Corunna, MI 48817. Representative: William B. Elmer, 21635 East Nine Mile Rd., St. Clair Shores, MI 48080. Transporting *general commodities* (except used household goods, hazardous or secret materials, and sensitive weapons and munitions), for the U.S. Government, between points in the U.S.

MC 145945 (Sub-3F), filed August 28, 1980. Applicant: WILLIS LEASING CORPORATION, 3175 Wall Ave., Ogden, UT 84401. Representative: Irene Warr, 430 Judge Bldg., Salt Lake City, UT 84111. Transporating *general commodities* (except used household goods, hazardous or secret materials, and sensitive weapons and munitions), for the U.S. Government, between points in the United States.

MC 149455F, filed August 22, 1980. Applicant: TORNETTA'S MOTOR TRUCK, INC., P.O. Box 349, Conshohocken, PA 19428. Representative: Alan Kahn, 1430 Land Title Bldg., Philadelphia, PA 19110. Transporating *general commodities* (except used household goods, hazardous or secret materials, and sensitive weapons and munitions), for the U.S. Government, between points in the United States.

Agatha L. Mergenovich,

Secretary.

[FR Doc. 80–29487 Filed 9–23–80; 8:45 am]

BILLING CODE 4810–31–M

Motor Carriers; Permanent Authority Decisions; Decision-Notice

The following applications, filed on or after July 3, 1980, are governed by Special Rule 247 of the Commission's Rules of Practice, see 49 CFR 1100.247. Special rule 247 was published in the **Federal Register** of July 3, 1980, at 45 FR 45539.

Persons wishing to oppose an application must follow the rules under 49 CFR 1100.247(B). A copy of any application, together with applicant's supporting evidence, can be obtained from any applicant upon request and payment to applicant of $10.00.

Amendments to the request for authority are not allowed. Some of the applications may have been modified prior to publication to conform to the Commission's policy of simplifying grants of operating authority.

Findings

With the exception of those applications involving duly noted problems (e.gs., unresolved common control, fitness, water carrier dual operations, or jurisdictional questions) we find, preliminarily, that each applicant has demonstrated its proposed service warrants a grant of the application under the governing section of the Interstate Commerce Act. Each applicant is fit, willing, and able to perform the service proposed, and to conform to the requirements of Title 49, Subtitle IV, United States Code, and the Commission's regulations. Except where noted, this decision is neither a major Federal action significantly affecting the quality of the human environment nor a major regulatory action under the Energy Policy and Conservation Act of 1975.

In the absence of legally sufficient protests in the form of verified statements filed on or before November 10, 1980 (or, if the application later becomes unopposed) appropriate authority will be issued to each applicant (except those with duly noted problems) upon compliance with certain requirements which will be set forth in a notice that the decision-notice is effective. Within 60 days after publication an applicant may file a verified statement in rebuttal to any statement in opposition.

To the extent that any of the authority granted may duplicate an applicant's other authority, the duplication shall be construed as conferring only a single operating right.

Note.—All applications are for authority to operate as a motor common carrier in interstate or foreign commerce over irregular routes, unless noted otherwise. Applications for motor contract carrier authority are those where service is for a named shipper "under contract".

Volume No. OP1–035

Decided: Sept. 17, 1980.

By the Commission, Review Board Number 1, Members Carleton, Joyce and Jones.

MC 200 (Sub-492F), filed September 9, 1980. Applicant: RISS INTERNATIONAL CORPORATION, P.O. Box 100, 215 W. Pershing Rd., Kansas City, MO 64141. Representative: H. Lynn Davis (same address as applicant). Transporting (1) *fiberglass tanks* and (2) *materials, equipment and supplies* used in the manufacture, distribution and installation of fiberglass tanks, between points in Los Angeles County, CA and Pettis County, MO, on the one hand, and, on the other, points in AL, AR, AZ, CA, CO, FL, GA, IA, ID, IL, IN, KS, KY, LA, MI, MO, MS, MT, NC, NE, NM, NV,

NY, OH, OK, OR, PA, SC, TN, TX, UT, VA, WA, WV, and WY, restricted to traffic originating at and destined to the above named points.

MC 200 (Sub-493F), filed September 9, 1980. Applicant: RISS INTERNATIONAL CORPORATION, P.O. Box 100, 215 W. Pershing Rd., Kansas City, MO 64141. Representative: H. Lynn Davis (same address as applicant). Transporting *plastic articles,* and *materials, equipment, and supplies* used in the manufacture and distribution of plastic articles, from the facilities Sweetheart Plastics at or near Reno and Sparks, NV, to points in AZ, CA, OR, UT, and WA, restricted to traffic originating at the name origins and destined to the indicated destinations.

MC 7840 (Sub-36F), filed September 8, 1980. Applicant: ST. LAWRENCE FREIGHTWAYS, INC., 650 Cooper St., Watertown, NY 13601. Representative: E. Stephen Heisley, 805 McLachlen Bank Bldg., 666 Eleventh St., N.W., Washington, DC 20001. Transporting (1) *railway brakes, power pumps, castings, steel racks,* and *agricultural implements,* (2) *parts and accessories* for the commodities named in (1) above, and (3) *materials, equipment and supplies* used in the manufacture and distribution of the commodities named in (1) and (2) above, between points in Jefferson County, NY, on the one hand, and, on the other, points in the U.S. (except AK and HI).

MC 29910 (Sub-284F), filed September 8, 1980. Applicant: ARKANSAS-BEST FREIGHT SYSTEM, INC., 301 South Eleventh St., Fort Smith, AR 72901. Representative: Joseph K. Reber, P.O. Box 48, Fort Smith, AR 72902. Transporting *general commodities* (except those of unusual value, classes A and B explosives, household goods as defined by the Commission, commodities in bulk, and those requiring special equipment), serving Dyersville, IA, as an off-route points in connection with applicant's otherwise authorized regular-route operations between Davenport, IA, and Omaha, NE.

Note.—Applicant intends to tack this authority with its existing regular-route operations.

MC 29910 (Sub-286F), filed September 9, 1980. Applicant: ARKANSAS-BEST FREIGHT SYSTEM, INC., 301 South Eleventh St., Fort Smith, AR 72901. Representative: Joseph K. Reber, P.O. Box 48, Fort Smith, AR 72902. Transporting *general commodities* (except those of unusual value, classes A and B explosives, household goods as defined by the Commission, commodities in bulk, and those requiring special equipment), serving Washington, IA as an off-route point in connection with applicant's otherwise authorized regular-route operations between Davenport, IA and Omaha, NE.

Note.—Applicant intends to tack the above requested authority with its existing regular-route operations.

MC 29910 (Sub-288F), filed September 11, 1980. Applicant: ARKANSAS-BEST FREIGHT SYSTEM, INC., 301 South Eleventh St., Fort Smith, AR 72901. Representative: Joseph K. Reber, P.O. Box 48, Fort Smith, AR 72902. Transporting *lumber and building materials,* between points in AL, IL, MO, MS, and TX, on the one hand, and, on the other, points in the U.S. (except AK and HI).

Note.—Applicant intends to tack this authority with its existing regular-route authority.

MC 35831 (Sub-24F), filed September 12, 1980. Applicant: E. A. HOLDER, INC., P.O. Box 69, Kennedale, TX 76060. Representative: Billy R. Reid, 1721 Carl Street, Fort Worth, TX 76103. Transporting (1) *building materials, gypsum and gypsum products,* and *paper and paper products,* and (2) *materials and supplies* used in the manufacture and distribution of the commodities in (1) above, between points in the U.S., under continuing contract(s) with Georgia Pacific Corporation, of Portland, OR.

MC 40270 (Sub-15F), filed September 12, 1980. Applicant: CRABBS TRANSPORT, INC., 3101 South Van Buren, P.O. Box 2386, Enid, OK 73701. Representative: R. H. Lawson 2753 Northwest 22nd St., Oklahoma City, OK 73107. Transporting *salt and salt products,* between Hutchinson, KS, on the one hand, and, on the other, points in OK on and south of a line beginning at the OK–TX state line and extending along U.S. Hwy 66 to Oklahoma City, OK, then along U.S. Hwy 62 to junction U.S. Hwy 266, then along U.S. Hwy 266 to junction U.S. Hwy 64, and then along U.S. Hwy 64 to the OK–AR state line.

MC 52460 (Sub-282F), filed September 9, 1980. Applicant: ELLEX TRANSPORTATION, INC., P.O. Box 9637, 1420 W. 35th St., Tulsa, OK 74107. Representative: Don E. Kruizinga (same address as applicant). Transporting *peanut butter and peanut butter packing supplies,* between points in AZ, AR, CA, LA, NM, OK, and TX.

MC 52460 (Sub-284F), filed September 9, 1980. Applicant: ELLEX TRANSPORTATION, INC., 1420 W. 35th St., P.O. Box 9637, Tulsa, OK 74107. Representative: Don E. Kruizinga (same address as applicant). Transporting *meats, meat products, meat byproducts, and articles distributed by meat-packing houses,* as described in Sections A and C of Appendix I to the report in *Descriptions in Motor Carrier Certificates,* 61 M.C.C. 209 and 766, (except hides and liquid commodities), from points in Caddo Parish, LA, Cowley County, KS, and Sebastin County, AR, to points in AL, FL, GA, IL, KS, MO, MS, NM, NC, OK, SC, TN, and TX.

MC 52460 (Sub-285F), filed September 9, 1980. Applicant: ELLEX TRANSPORTATION, INC., 1420 West 35th St., P.O. Box 9637, Tulsa, OK 74107. Representative: Don E. Kruizinga (same address as applicant). Transporting *tires, pneumatic,* from the facility of Michelin Tires Corporation at Dothan, AL, to Dallas and Houston, TX, New Orleans, LA, and Kansas City, KS, restricted to traffic originating at the named origin and destined to the indicated destinations.

MC 52460 (Sub-286F), filed September 9, 1980. Applicant: ELLEX TRANSPORTATION, INC., P.O. Box 9637, 1420 W. 35th St., Tulsa, OK 74107. Representative: William L. Tipton (same address as applicant). Transporting *meats, meat products and meat byproducts, and articles distributed by meat-packing houses,* as described in Sections A and C of Appendix I to the report in *Descriptions in Motor Carrier Certificates,* 61 M.C.C. 209 and 766 (except hides and commodities in bulk), from the facilities of Vernon Calhoun Packing Co., at Palestine, TX to points in AL, AZ, AR, CA, CO, FL, GA, IL, IN, IA, KS, KY, LA, MS, MO, NM, NC, OH, OK, SC, TN, and WI.

MC 57591 (Sub-34F), filed September 5, 1980. Applicant: EVANS DELIVERY COMPANY, INC., P.O. Box 268, Pottsville, PA 17901. Representative: Albert L. Evans, Jr. (same address as applicant) Transporting *malt beverages,* and *non-alcoholic beverages,* between points in Lehigh County, PA, on the one hand, and, on the other, points in CT, DE, KY, ME, MD, MA, NH, NJ, NY, OH, RI, TN, VT, VA, and DC.

MC 57591 (Sub-35F), filed September 5, 1980. Applicant: EVANS DELIVERY COMPANY, INC., P.O. Box 268, Pottsville, PA 17901. Representative: Albert L. Evans, Jr. (same address as applicant). Transporting *general commodities* (except household goods as defined by the Commission and classes A and B explosives), between points in CT, DE, MD, MA, NJ, NY, PA, RI, VA, WV, and DC. Condition: Issuance of a certificate in this proceeding is subject to (1) prior or coincidental cancellation, at applicant's written request, of its certificates in Subs 12, 15, 16, 17G, 22F, 26F, 27F, and

the irregular route portion in 4, and (2) the withdrawal, at applicant's written request, of any of the proceedings still pending in Subs-31F and 32F).

MC 78400 (Sub-95F), filed September 10, 1980. Applicant: BEAUFORT TRANSFER COMPANY, a corporation, P.O. Box 151, Gerald, MO 63037. Representative: Ernest A. Brooks II, 1301 Ambassador Bldg., St. Louis, MO 63101. Transporting *general commodities* (except those of unusual value, classes A and B explosives, households goods as defined by the Commission, and commodities in bulk), between Centralia and Washington, MO, on the one hand, and, on the other, points in the United States (except AK and HI).

MC 87231 (Sub-26F), filed September 9, 1980. Applicant: BAY & BAY TRANSFER CO., INC., 7200 West 128th St., Savage, MN 55378. Representative: Pamela N. Merkle, 300 Roanoke Bldg., Minneapolis, MN 55402. Transporting *silica sand*, from points in Scott County, MN, to points in WI, IA, NE, WY, ND, SD, and MI.

MC 94201 (Sub-196F), filed September 15, 1980. Applicant: BOWMAN TRANSPORTATION, INC., P.O. Box 17744, Atlanta, GA 30316. Representative: Maurice F. Bishop, 601–09 Frank Nelson Bldg., Birmingham, AL 35203. Transporting *general commodities* (except household goods as defined by the Commission, and classes A and B explosives), between points in Sunflower County, MS, Haywood County, TN, Hampden County, MA, and Huron, Cuyahoga, Richland and Medina Counties, OH, on the one hand, and, on the other, points in the United States.

MC 95540 (Sub-1168F), filed September 3, 1980. Applicant: WATKINS MOTOR LINES, INC., 1144 West Griffin Road, P.O. Box 1636, Lakeland, FL 33802. Representative: Paul E. Weaver (same address as applicant). Transporting (1) *textile products*, and (2) *materials and supplies* used in the manufacture and distribution of textile products, from Doraville and Albany, GA, to points in TX, IL, OH, KS, MO, and MA.

MC 103490 (Sub-83F), filed September 12, 1980. Applicant: PROVAN TRANSPORT CORP., 210 Mill St., Newburgh, NY 10048. Representative: Morton E. Kiel, Suite 1832, 2 World Trade Center, New York, NY 10048. Transporting *liquid commodities*, between points in Orange County, NY, on the one hand, and on the other, points on the United States (except AK and HI).

MC 110420 (Sub-856F), filed September 8, 1980. Applicant: QUALITY CARRIERS, INC., 100 Waukegan Rd., P.O. Box 1000, Lake Bluff, IL 60044. Representative: John R. Sims, Jr., 915 Pennsylvania Bldg., 425 13th St., N.W., Washington, DC 20004. Transporting (1) *chemicals or allied products*, (2) *petroleum or coal products*, and (3) *rubber or miscellaneous plastic products*, as described in Items (28), (29), and (30), respectively, of the Standard Transportation Commodity Code Tariff, between the facilities of Hercules Incorporated, at points in the United States, on the one hand, and on the other, points in the United States.

MC 111231 (Sub-312F), filed September 9, 1980. Applicant: JONES TRUCK LINES, INC., 610 East Emma Ave., Springdale, AR 72764. Representative: Don A. Smith, P.O. Box 43, 510 North Greenwood Ave., Fort Smith, AR 72902. Transporting (1)(a) *motor vehicles, hardware, conveyors and conveyor equipment, furniture, power equipment, wheel goods and bicycles*, and (b) *parts, attachments and accessories for the commodities in (a) above* (c) *lawn mowers, rotary tillers, yard tractors, shredders, edgers, motorized trail bikes, and snow throwers*, and (3) *materials, equipment and supplies* used in the manufacture and distribution of the commodities named in (10 and (2) above, between the facilities of MTD Products, Inc. at or near (a) Cleveland, Liverpool, Shelby, Strongsville and Willard, OH, (b) Indianola, MS, and (c) Westfield, MA, on the one hand, and on the other, points in the U.S. (except AK and HI).

Note.—Applicant intends to tack the above requested authority with its existing regular route operations.

MC 112520 (Sub-393F), filed September 3, 1980. Applicant: McKENZIE TANK LINES, INC., P.O. Box 1200, Tallahassee, FL 32302. Representative: Thomas F. Panebianco (same address as applicant). Transporting (1) *paints, lacquers, resins, and paint materials*, in bulk, in tank vehicles, (a) from Covington, GA, to points in NC, and (b) from Pittsburgh and Rochester, PA, to Covington, GA, and (2) *paint solvents*, in bulk, in tank vehicles, from Kingsport, TN, to Pittsburgh and Rochester, PA.

MC 114890 (Sub-108F), filed September 15, 1980. Applicant: COMMERCIAL CARTAGE CO., a corporation, 343 Axminster Dr., Fenton, MO 63026. Representative: David A. Cherry, P.O. Box 1540, Edmond, OK 73034. Transporting *nitric acid*, in bulk, in tank vehicles, from the facilities of N-ReN Company at or near Pryor, OK, to the facilities of Atlas Powder Co., at or near Atlas, MO.

MC 115651 (Sub-91F), filed September 12, 1980. Applicant: KANEY TRANSPORTATION, INC., 7222 Cunningham Road, P.O. Box 39, Rockford, IL 61105. Representative: E. Stephen Heisley, 805 McLachlen Bank Bldg., 666 Eleventh St., N.W., Washington, DC 20001. Transporting *fertilizer and fertilizer materials*, in bulk, in tank vehicles, between points in Rock County, WI, on the one hand, and, on the other, points in IA, IL, MI, and MN.

MC 115841 (Sub-772F), filed September 8, 1980. Applicant: COLONIAL REFRIGERATED TRANSPORTATION, INC., McBride Lane, P.O. Box 22168, Knoxville, TN 37922. Representative: Richard L. Hollow (same address as applicant). Transporting *meats, meat products, meat byproducts*, and *articles distributed by meat-packing houses* as described in Sections A and C of Appendix I to the report in *Descriptions in Motor Carrier Certificates*, 61 M.C.C. 209 and 766, (except hides and commodities in bulk), from the facilities of Iowa Beef Processors, Inc., at or near Holcomb, KS, to points in AL, FL, GA, MS, NC, SC, TN, AR, LA, OK, and TX.

MC 115841 (Sub-773F), filed September 12, 1980. Applicant: COLONIAL REFRIGERATED TRANSPORTATION, INC., McBride Lane, P.O. Box 22168, Knoxville, TN 37922. Representative: Richard L. Hollow (same address as applicant). Transporting (1) *plastic articles*, and (2) *materials, equipment, and supplies* used in the manufacture and distribution of plastic articles (except commodities in bulk), between points in the U.S., restricted to traffic originating at or destined to the facilities utilized by Amoco Foam Products.

MC 117851 (Sub-33F), filed September 12, 1980. Applicant: JOHN CHEESEMAN TRUCKING, INC., 501 North First St., Fort Recovery, OH 45846. Representative: Earl N. Merwin, 85 East Gay St., Columbus, OH 43215. Transporting *general commodities* (except household goods as defined by the Commission and classes A and B explosives), between points in the U.S., under continuing contract(s) with Horian Engineering, Inc., of Lake Mary, Fl.

MC 121821 (Sub-10F), filed September 8, 1980. Applicant: TENNESSEE MOTOR LINES, INC., P.O. Box 7363, Nashville, TN 37210. Representative: Ralph B. Mattews, P.O. Box 872, Atlanta, GA 30301. Transporting *general commodities* (except classes A and B explosives, household goods as defined by the Commission, commodities in

bulk, and those requiring special equipment), between Nashville and Jasper, TN, over U.S. Hwy 41, serving no intermediate points.

MC 124230 (Sub-42F), filed September 8, 1980. Applicant: C. B. JOHNSON, INC., P.O. Drawer S, Cortez, CO 81321. Representative: David E. Driggers, Suite 1600 Lincoln Center, 1660 Lincoln St., Denver, CO 80264. Transporting *ore and ore concentrates,* in bulk, between points in AZ, CA, CO, ID, MT, NM, NV, OR, TX, UT, WA, WY, AR, and SD.

MC 125951 (Sub-67F), filed September 9, 1980. Applicant: SILVEY REFRIGERATED CARRIERS, INC., 7000 West Center Rd., Suite 325, Omaha, NE 68106. Representative: Robert M. Cimino (same address as applicant). Transporting *such commodities* as are dealt in or used by retail department stores, from those points in the U.S. in and east of ND, SD, NE, KS, OK, and TX, to Sioux City, IA.

MC 128190 (Sub-17F), filed September 9, 1980. Applicant: FREMONT CONTRACT CARRIERS, INC., 1520 Railroad St., P.O. Box 489, Fremont, NE 68025. Representative: Wendell Bruner (same address as applicant). Transporting (1) *such commodities* as are dealt in by wholesale and retail lumber yards and dealers, (2) *prefabricated buildings and building sections,* and (3) *materials, equipment, and supplies* used in the manufacture and distriution of the commodities in (1) and (2), between points in the U.S., under continuing contract(s) with Christensen Lumber, Inc., of Fremont, NE.

MC 129171 (Sub-18F), filed September 11, 1980. Applicant: ARTHUR SHELLEY, INC., R.D. No. 2, Dallas, PA 18612. Representative: Joseph A. Keating, Jr., 121 S. Main St., Taylor, PA 18517. Transporting *such commodities* as are dealt in by retail cigar and drug stores, from points in Middlesex, Union, Hudson and Bergen Counties, NJ, to points in CA, OR, and WA.

MC 130641 (Sub-1F), filed September 4, 1980. Applicant: U.S. TRAFFIC COORDINATORS, INC., 2600 West Broadway, Louisville, KY 40211. Representative: Robert J. Gallagher, Esq., 1000 Connecticut Ave. NW., Suite 1112, Washington, DC 20036. As a *broker,* in arranging for the transportation of *general commodities* (except household goods), between points in the United States.

MC 135170 (Sub-51F), filed September 8, 1980. Applicant: TRI-STATE ASSOCIATES, INC., P.O. Box 188, Federalsburg, MD 21632. Representative: James C. Hardman, 33 N. LaSalle St., Chicago, IL 60602. Transporting *plastic articles* (except commodities in bulk), and *materials, equipment, and supplies* (except commodities in bulk) used in the manufacture and distribution of plastic articles, between points in the U.S., under a continuing contract(s) with Amoco Foam Products Company, a subsidiary of Amoco Chemical Corp., of Atlanta, GA.

MC 135170 (Sub-52F), filed September 11, 1980. Applicant: TRI-STATE ASSOCIATES, INC., P.O. Box 188, Federalsburg, MD 21632. Representative: James C. Hardman, 33 N. LaSalle St., Chicago, IL 60602. Transporting (1) *glass containers and metal containers,* and (2) *closures* for the commodities in (1) above, between points in the U.S., under a continuing contract(s) with Ball Corporation, of Muncie, IN, and its subsidiaries.

MC 135410 (Sub-105F), filed September 9, 1980. Applicant: COURTNEY J. MUNSON, d.b.a. MUNSON TRUCKING, North 6th Street Road, Monmouth, IL 61462. Representative: Daniel O. Hands, 205 West Touhy Ave., Suite 200, Park Ridge, IL 60068. Transporting *general commodities* (except those of unusual value, classes A and B explosives, household goods as defined by the Commission, commodities in bulk, and those requiring special equipment), between points in the U.S., restricted to traffic originating at or destined to the facilities of International Paper Company.

MC 135861 (Sub-85F), filed September 12, 1980. Applicant: LISA MOTOR LINES, INC., P.O. Box 4550, Fort Worth, TX 76106. Representative: Billy R. Reid, 1721 Carl St., Fort Worth, TX 76103. Transporting *such commodities* as are dealt in or used by food and drug stores and food and drug business houses, between points in the U.S., under continuing contract(s) with Warner-Lambert Company, of Morris Plains, NJ.

MC 139171 (Sub-9F), filed September 9, 1980. Applicant: CONTROLLED DELIVERY SERVICE INC., 17295 East Railroad Ave., City of Industry, CA 91749. Representative: Robert L. Cope, Suite 501, 1730 M St. NW., Washington, DC 20036. Transporting *general commodities* (except household goods as defined by the Commission and classes A and B explosives), between points in the U.S., under a continuing contract(s) with East-West Shippers Association, Inc., of Chicago, IL.

MC 143471 (Sub-26F), filed September 5, 1980. Applicant: DAKOTA PACIFIC TRANSPORT, INC., 308 W. Blvd., Rapid City, SD 57701. Representative: J. Maurice Andren, 1734 Sheridan Lake Rd., Rapid City, SD 57701. Transporating *general commodities* (except household goods as defined by the Commission, and classes A and B explosives), between points in the U.S., under continuing contracts(s) with (1) Tyler Refrigerated Corp. of Niles, MI, and its subsidiaries (a) A. H. Witt Co. of Collierville, TN, (b) Tyler-Kalt, Inc., of Olive Branch, MS, (c) Stanley Knight Corp. of New Troy, MI, and (d) E.M.S. Corp. of Indianapolis, IN, and (2) Madera Pacific Inc. of Rapid City, SD, and its divisions of (a) Pro-Mart, (b) Gillette Lumber Mart, (c) Knecht Lumber Mart, (d) Discount Lumber Mart, (e) Building Material Distributors, (f) Dakota Craft, and (g) Forest Products Distributors. Condition: Upon issuance of a permit in this proceeding. the permit in MC 143471 (Sub-10F) will be cancelled.

MC 143471 (Sub-27F), filed September 9, 1980. Applicant: DAKOTA PACIFIC TRANSPORT, INC., 308 W. Blvd., Rapid City, SD 57701. Representative: J. Maurice Andren, 1734 Sheridan Lake Road, Rapid City, SD 57701. Transporting *lumber, lumber products, forest products, wood products, and millwork,* between points in the U.S., under continuing contracts(s) with (1) Whitewood Custom Treaters, Inc., of Whitewood, SD, (2) Wickes Forest Industries, a Division of Wickes Corporation, of Grangeville, ID, (3) Midwestern Forest Products, of Rapid City, SD, (4) Weyerhaeuser Company, of Tacoma, WA, (5) Dickson Forest Products, of Sturgis, SD, (6) Bohemia, Inc., of Eugene, OR, and (7) Midwest Lumber Associates, of Sun Prairie, WI. Condition: Upon issuance of a permit in this proceeding, the permits in MC 143471 (Sub-5F) (Part II only), (Sub-12F), (Sub-15F), and (Sub-20F) will be cancelled.

MC 144630 (Sub-50F), filed September 10, 1980. Applicant: STOOPS EXPRESS, INC., P.O. Box 287, Anderson, IN 46015. Representative: Donald W. Smith, P.O. Box 40248, Indianapolis, IN 46240. Transporting *pulp, paper or allied products,* as described in Item (26) of the Standard Transportation Commodity Code Tariff, (1) between points in Ouachita and Orleans Parishes, LA, Kankakee County, IL, Shiawassee and Kent Counties, MI, Hamilton County, OH, Dougherty and Fulton Counties, GA, Dallas County, TX, Crawford County, AR, Maricopa County, AZ, Los Angeles County, CA, Storey County, NV, Guilford County, NC, and Jackson County, MO, and (2) between points in (1) above, on the one hand, and, on the other, points in the U.S.

MC 145220 (Sub-17F), filed September 8, 1980. Applicant: IREDELL MILK TRANSPORTATION, INC., Route 5, Mooresville, NC 28115. Representative: George W. Clapp, P.O. Box 836, Taylors, SC 29687. Transporting (1) *fruit and vegetable juices,* and *fruit and vegetable juice beverages* (except commodities in bulk), and (2) *materials, equipment, and supplies,* used in the manufacture and distribution of the commodities in (1) above, between the facilities of World Citrus, Inc., at or near Winston-Salem, NC, on the one hand, and, on the other, points in TX, and those in the U.S. in and east of LA, AR, MO, IL, and WI.

MC 145441 (Sub-120F), filed September 12, 1980. Applicant: A.C.B. TRUCKING, INC., P.O. Box 5130, North Little Rock, AR 72119. Representative: Ralph E. Bradbury (same address as applicant). Transporting *rubber,* between points in the U.S., restricted to traffic originating at or destined to the facilities of Baker Rubber, Inc.

MC 146440 (Sub-9F), filed September 5, 1980. Applicant: BOSTON CONTRACT CARRIER, INC., Box 68, Brookline, MA 02167. Representative: Alan Bernson, Suite 32, 34 Market St., Everett, MA 02149. Transporting *general commodities* (except those of unusual value, classes A and B explosives, household goods as defined by the Commission, commodities in bulk, and those requring special equipment) from points in ME to points in AL, AZ, AR, CA, CO, FL, GA, ID, IL, IN, IA, KS, KY, LA, MD, MI, MN, MS, MO, MT, NE, NV, NM, NC, ND, OH, OK, OR, SC, SD, TN, TX, UT, VA, WA, WI, WV, and WY.

MC 148490 (Sub-7F), filed September 12, 1980. Applicant: C & N EVANS TRUCKING COMPANY, INC., R.F.D. 2, Box 39–E, Stoneville, NC 27048. Representative: Clarence B. Evans (same address as applicant). Transporting *containers and packing materials,* between points in GA, NC, NY, TX, and WI.

MC 149091 (Sub-1F), filed September 12, 1980. Applicant: AVERY TRUCKING CO., INC., P.O. Box 426, Dahlonega, GA 30533. Representative: Thomas D. Rainey (same address as applicant). Transporting *such commodities* as are dealt in or used by manufacturers and distributors of paper and paper products (except commodities in bulk), between points in the U.S., under continuing contract(s) with International Paper Company, of New York, NY.

MC 149470F, filed September 12, 1980. Applicant: P & L MOTOR LINES, INC., P.O. Box 4616, Fort Worth, TX 76106. Representative: Billy R. Reid, 1721 Carl St., Forth Worth, TX 76103. Transporting (1)(a) *foodstuffs,* and (b) *meat by-products, and articles distributed by meat packinghouses* (except those commodities described in (a), and (2) *materials, equipment, and supplies* used in the manufacture and distribution of the commodities in (1) above, between points in the U.S., under continuing contract(s) with Swift & Company, of Chicago, IL.

MC 150381 (Sub-1F), filed September 11, 1980. Applicant: SOUTH EAST TRANSFER, LTD., PTH No. 12, Steinbach, Manitoba, Canada ROA 2AO. Representative: Mike Miller, P.O. Box 1897, Fargo, ND 58107. Transporting *general commodities* (except those of unusual value, classes A and B explosives, household goods as defined by the Commission, automobiles, trucks, and buses), in intermodal containers, between ports of entry on the International boundary line between the U.S. and Canada in MN and ND, on the one hand, and, on the other, points in MT and NE.

MC 151050 (Sub-1F), filed September 9, 1980. Applicant: RYDER TRUCK LINES, INC., 2050 Kings Rd., P.O. Box 2408, Jacksonville, FL 32203. Representative: S. E. Somers, Jr. (same address as applicant). Transporting *such commodities* as are dealt in and used by grocery and food business houses, (except commodities in bulk), between points in the U.S., under continuing contract(s) with General Foods Corporation, of White Plains, NY.

MC 151701 (Sub-1F), filed September 10, 1980. Applicant: COMMERCIAL CARTAGE CO, a corporation, 343 Axminster Drive, Fenton, MO 63026. Representative: David A. Cherry, P.O. Box 1540, Edmond, OK 73034. Transporting *chemicals and petroleum products,* between points in the U.S., under continuing contract(s) with TransChemical, Incorporated, of St. Louis, MO.

MC 151741F, filed September 3, 1980. Applicant: D. E. WILLOUGHBY TRUCKING, R.R. 7, Box 393, Columbus, IN 47201. Representative: Donald W. Smith, P.O. Box 40248, Indianapolis, IN 46240. Transporting *general commodities* (except household goods as defined by the Commission, and classes A and B explosives), between points in the U.S., under continuing contract(s) with Arvin Industries, Inc., of Columbus, IN.

Volume No. OP3.021

Decided: September 15, 1980.

By the Commission, Review Board Number 2, Members Chandler, Eaton and Liberman.

MC 99594 (Sub-2F), filed September 2, 1980. Applicant: THE UNION CARTAGE COMPANY, a corporation, 42 N. Canfield-Niles Rd., Youngstown, OH 44515. Representative: A. Charles Tell, 100 E. Broad St., Columbus, OH 43215. Transporting (1)(a) *aluminum and aluminum articles, refractories* and *refractory products,* and *insulation and insulating materials* and (b) *materials, equipment and supplies* used in the manufacture and installation of the commodities in (1) (except commodities in bulk), between points in Columbiana, Licking, and Lucas Counties, OH, Erie County, PA, and Jackson County, WV, on the one hand, and, on the other, points in IN, NY, OH, PA, and WV, and (2) *general commodities* (except household goods as defined by the Commission, and classes A and B explosives), between points in Mahoning and Trumbull Counties, OH, on the one hand, and, on the other, points in OH. Condition: Issuance of a certificate is subject to the submission by applicant of a request, in writing, for prior or coincidental cancellation of Certificate of Registration MC 99494 (Sub-1), issued September 13, 1974.

Note.—In part (2), applicant seeks to convert its certificate of registration in MC 99594 (Sub-1) to a certificate of public convenience and necessity.

MC 104104 (Sub-26F), filed August 28, 1980. Applicant: GEORGE A. FETZER, INC., Newton-Sussex Rd., Augusta, NJ 07822. Representative: Robert G. Pepper, 168 Woodbridge Ave., Highland Park, NJ 08904. Transporting (1) *containers,* from Buffalo and New York, NY, Philadelphia, PA, Framingham, MA, Baltimore, MD, and Richmond, VA, to those points in the U.S. in and east of MN, IA, MO, AR, and LA; and (2) *materials and supplies* used in the manufacture and distribution of containers, in the reverse direction.

MC 108835 (Sub-55F), filed August 25, 1980. Applicant: HYMAN FREIGHTWAYS, INC., 2380 Wycliff, St. Paul, MN 55114. Representative: Rodney L. Trocke, 2690 N. Prior Ave., Roseville, MN 55113. Transporting (1) *cleaning compounds, caulking compounds, roof and concrete sealer, fertilizer, and petroleum products,* and (2) *materials, equipment, and supplies* used in the manufacture and distribution of the commodities of the commodities in (1) above, between points in Scott County, MN, on the one hand, and, on the other, points in the U.S. (except AK and HI).

MC 110325 (Sub-161F), filed August 28, 1980. Applicant: TRANSCON LINES, a corporation, P.O. Box 92220, Los Angeles, CA 90009. Representative: Wentworth E. Griffin, Midland Building, 1221 Baltimore Ave., Kansas City, MO 64105. Transporting *general commodities* (except household goods

as defined by the Commission and Classes A and B explosives), (1) Between San Francisco, CA, and Blaine, WA: from San Francisco over Interstate Hwy 80 to junction Interstate Hwy 505, then over Interstate Hwy 505 to junction Interstate Hwy 5, then over Interstate Hwy 5 to Blaine, and return over the same route; and (2) Between Sacramento, CA, and junction Interstate Hwys 5 and 505, over Interstate Hwy 5; serving in connection with routes (1) and (2) above all intermediate points and the off-route point of Longview, WA.

Note.—Applicant intends to tack the authority sought with its existing regular-route authority.

MC 117765 (Sub-295F), filed September 3, 1980. Applicant: HAHN TRUCK LINE, INC., 1100 S. MacArthur, P.O. Box 75218, Oklahoma City, OK 73147. Representative: R. E. Hagan (same address as applicant). Transporting *non-frozen foodstuffs*, in containers, from Olivia, MN, to points in AL, AR, CO, KS, KY, LA, MS, MO, NE, NM, OK, TN, and TX.

MC 121664 (Sub-131F), filed September 5, 1980. Applicant: HORNADY TRUCK LINE, INC., P.O. Box 846, Monroeville, AL 36460. Representative: William E. Grant, 1702 1st Ave. South, Birmingham, AL 35233. Transporting (1) *forest products, lumber products and wood products*, and (2) *materials, equipment, and supplies* used in the manufacture and distribution of the commodities in (1) above, between points in MS, on the one hand, and, on the other, those points in the U.S. in and east of ND, SD, NE, KS, OK, and TX.

MC 124004 (Sub-61F), filed September 5, 1980. Applicant: RICHARD DAHN, INC., 620 West Mountain Rd., Sparta, NJ 07871. Representative: George A. Olsen, P.O. Box 357, Gladstone, NJ 07934. Transporting (1) *highway marking products, ballotini, broken glass, plastic articles, and metal articles* (except commodities in bulk, in tank vehicles), and (2) *materials, equipment, and supplies* used in the manufacture and distribution of the commodities in (1) above (except commodities in bulk, in tank vehicles), between points in the U.S. (except AK and HI), restricted to traffic originating at or destined to the facilities of Potters Industries and its subsidiaries.

MC 141514 (Sub-2F), filed September 2, 1980. Applicant: WILLIAM H. BURGENER, d.b.a. BURGENER CONTRACT CARRIERS, Route 3, Box 485, Merrill, WI 54452. Representative: Norman A. Cooper, 145 W. Wisconsin Ave., Neenah, WI 54956. Transporting (1)(a) *footwear, leather, and leather products*, and (b) *equipment, materials and supplies* used in the manufacture, sale, and distribution of the commodities in (1) above, between points in the U.S., under continuing contract(s) with Weinbrenner Shoe Company, of Merrill, WI, and (2)(a) *fabricated metal products*, and (b) *equipment, supplies, and materials* used in the manufacture, sale, and distribution of the commodities in (2)(b) above, between points in the U.S., under continuing contract(s) with National Wire Corporation, of Merrill, WI.

MC 144075 (Sub-7F), filed September 5, 1980. Applicant: INDUSTRIAL TRANSPORT, INC., 11910 Harvard Ave., P.O. Box 04177, Cleveland, OH 44105. Representative: Brian S. Stern, 2425 Wilson Blvd., Suite 367, Arlington, VA 22201. Transporting (1) *electric stairways* and *electric walks*, (2) *elevators*, and (3) *materials, equipment, and supplies* used in the manufacture and installation of the commodities in (1) and (2) above, between points in the U.S., under continuing contract(s) with Westinghouse Electric Corporation, of Edison, NJ. Condition: Issuance of a permit is subject to the submission by applicant of a request, in writing, for prior or coincidental cancellation of Permit MC 144075 (Sub-6), issued June 12, 1980.

MC 145914 (Sub-8F), filed September 2, 1980. Applicant: COASTAL TRUCK LINES, INC., How Lane, New Brunswick, NJ 08903. Representative: Lawrence S. Burstein, Suite 2373, One World Trade Center, New York, NY 10048. Transporting (1) *such commodities* as are dealt in by chain grocery and food business houses, and (2) *materials, equipment and supplies* used in the manufacture and distribution of the commodities in (1) above, (except commodities in bulk and frozen commodities), between points in the U.S., under continuing contract(s) with the Colorox Company, of Oakland, CA.

MC 150364F, filed August 26, 1980. Applicant: BURCO BROS. TRUCKING, LTD., Rural Route 1, Independence, IA 50644. Representative: Richard P. Moore, 2720 First Avenue N.E., P.O. Box 1943, Cedar Rapids, IA 52406. Transporting *plastic and plastic articles*, between points in the U.S. under continuing contract(s) with Triangle Plastics, Inc., Winthrop, IA, and Superior Plastics, Inc. of Oelwein, IA.

MC 150464 (Sub-1F), filed August 14, 1980, previously noticed in the **Federal Register** on August 28, 1980 as MC 15046 (Sub-1F). Applicant: C. E. MELTON TRANSPORT, Route 4, Hwy. 280 East, Americus, GA 31709. Representative: Carl E. Melton (same address as applicant).

Note.—This partial republication indicates the correct docket number which is MC 150464 (Sub-1F).

MC 150744 (Sub-1F), filed June 25, 1980, previously noticed in **Federal Register** on August 28, 1980, as MC 15074 (Sub-1F). Applicant: DONALD P. AVERILL, d.b.a. DON AVERILL TRUCKING, 405 Main, P.O. Box 191, Tillamook, OR 97141. Representative: Russell M. Allen, 1200 Jackson Tower, Portland, OR 97205.

Note.—This republication correctly states the docket number and sub number, which is MC 150744 (Sub-1F).

MC 150785F, filed August 25, 1980. Applicant: THOMPSON'S MOTOR TRANS., INC., 1 Innis Dr., Billerica, MA 01821. Representative: Joseph M. Klements, 84 State St., Boston, MA 02109. Transporting *beverages, beverage containers*, and *materials, equipment, and supplies* used in the manufacture of beverages and beverage containers (except commodities in bulk), between points in the U.S., under continuing contract(s) with Cott Corporation, and Coca Cola Bottling Plant, Inc., both of South Portland, ME.

MC 150985F, filed August 26, 1980. Applicant: KEITH LANKFORD, d.b.a. K. TRUCKING, Route 4, Fairfield, IA 52556. Representative: Kenneth F. Dudley, P.O. Box 279, Ottumwa, IA 52501. Transporting (1) *buildings and component parts of buildings*, and (2) *material, equipment, and supplies* used in the manufacture and distribution of the commodities in (1) above, between Washington, IA, on the one hand, and, on the other, points in IL, IN, MN, MO, and WI.

MC 151174F, filed August 22, 1980. Applicant: GRANE TRANSPORTATION LINES, LTD., a corporation, 1011 South Laramie Ave., Chicago, IL 60644. Representative: John R. Zang (same address as applicant). Transporting *general commodities* (except classes A and B explosives, and household goods as defined by the Commission), between points in the U.S., under continuing contract(s) with Zayre Corp., of Framingham, MA.

MC 151594F, filed August 28, 1980. Applicant: SHILOH TRANSPORTATION, INC., 143 Pickwick Rd., Savannah, TN 38372. Representative: Robert L. Baker, 618 United American Bank Bldg., Nashville, TN 37219. Transporting *general commodities* (except household goods as defined by the Commission and Classes A & B explosives), (1) between Tupelo, MS, and Nashville, TN: from Tupelo over U.S. Hwy 45 to junction U.S. Hwy 64, then over U.S. Hwy 64 to junction TN Hwy 22, then over TN Hwy

22 to junction Interstate Hwy 40, then over Interstate Hwy 40 to Nashville, and return over the same route, serving all intermediate points, and serving points in Lee and Prentiss Counties, MS and Davidson County, TN as off-route points, and (2) between Tupelo, MS, and Memphis, TN: (a) over U.S. Hwy 78, serving all intermediate points, and serving points in Lee and DeSoto Counties, MS, Shelby County, TN, and Crittenden County, AR, as off-route points, and (b) from Tupelo over U.S. Hwy 45 to junction U.S. Hwy 72, then over U.S. Hwy 72 to Memphis, and return over the same route, serving all intermediate points, and serving points in DeSoto, Lee and Alcorn Counties, MS, Shelby County, TN, and Crittenden County, AR as off-route points.

MC 151645F, filed August 27, 1980. Applicant: K.S.R., INC., Highway 25 East, Paragould, AR 72450. Representative: William W. Roswell (same address as applicant). Transporting *general commodities* (except household goods as defined by the Commission and classes A and B explosives), between points in Pulaski County, AR, on the one hand, and, on the other, points in the U.S.

MC 151744F, filed September 2, 1980. Applicant: ESTB, INC., 21 Pier Lane, Roseland, NJ 07068. Representative: Michael R. Werner, 167 Fairfield Rd., P.O. Box 19 1409, Fairfield, NJ 07006. Transporting *metal and metal by-products,* and (2) *materials, supplies and equipment* used in the manufacture, sale, and distribution of metal products and metal by-products, between points in Middlesex County, NJ, San Patricio County, TX, Du Page County, IL, and Franklin County, OH, on the one hand, and, on the other, points in the U.S.

MC 151745F, filed September 2, 1980. Applicant: JAMES R. WALKER, d.b.a. SAFEWAY CAB COMPANY, 906 May St., East Liverpool, OH 43920. Representative: Arthur J. Diskin, 806 Frick Bldg., Pittsburgh, PA 15219. Transporting *passengers and their baggage* and *railroad equipment* in the same vehicle with the passengers, between (a) points in IN on and east of U.S. Hwy 31, (b) points in WV on and north of U.S. Hwy 50, (c) points in OH, and (d) points in PA on and west of U.S. Hwy 219, under continuing contract(s) with Consolidated Rail Corporation, of Philadelphia, PA.

Broker

MC 131005F, filed September 3, 1980. Applicant: MAGIC CARPET TRAVELS ADVISORS OF IDAHO, INC., 581 4th St., Idaho Falls, ID 83401. Representative: Robert Silvester, Magic Carpet Travels, 16 South Center St., Rexburg, ID 83440. To operate as a *broker* at Idaho Falls and Rexburg, ID, in arranging for the transportation of *passengers and their baggage,* in special and charter operations, between points in ID, on the one hand, and, on the other, points in the U.S.

Volume No. OP4–054

Decided: September 15, 1980.

By the Commission, Review Board Number 3, Members Parker, Fortier and Hill.

MC 2416 (Sub-11F), filed September 10, 1980. Applicant: HULME TRANSPORTATION CO., a corporation, P.O. Box 101, Foster, R.I. 02825. Representative: Charles R. Reilly, 391 Davisvile Rd., North Kingstown, R.I. 02852. Transporting *chemicals and allied products* as described in Item 28 of the Standard Transportation Commodity Code Tariff, between points in the U.S., under continuing contract(s) with ARS Chemical, Inc., of Providence, R.I.

MC 21866 (Sub-179F), filed September 11, 1980. Applicant: WEST MOTOR FREIGHT, INC., 740 S. Reading Ave., Boyertown, PA 19512. Representative: Alan Kahn, 1430 Land Title Bldg., Philadelphia, PA 19110. Transporting *general commodities* (except those of unusual value, classes A and B explosives, commodities in bulk, and household goods as defined by the Commission), between points in the U.S. (except AK and HI), restricted to traffic originating at or destined to the facilities of McCraw Edison Company, Power Systems Group.

MC 26396 (Sub-375F), filed September 11, 1980. Applicant: THE WAGGONERS TRUCKING, P.O. Box 31357, Billings, MT 59107. Representative: Bradford E. Kistler, P.O. Box 82028, Lincoln, NE 68501. Transporting (1) *Plastic pipe and fittings,* and (2) *materials, equipment and supplies* used in the manufacture and distribution of plastic pipe and fittings, between points in MN, on the one hand, and on the other, points in AL, AZ, FL, GA, IN, KY, LA, MI, MS, NV, NM, NC, OH, SC, TN, VA, and WV.

MC 41116 (Sub-85F), filed September 9, 1980. Applicant: FOGLEMAN TRUCK LINE, INC., P.O. Box 1504, Crowley, LA 70526. Representative: Austin L. Hatchell, P.O. Box 2165, Austin, TX 78768. Transporting (1) *paper and paper products* (except in bulk), and *materials and supplies* used in the manufacture and distribution of the commodities in (1) (except in bulk), between points in the U.S. (except AK and HI), under continuing contract(s) with Manville Forest Products Corporation, of West Monroe, LA.

MC 59457 (Sub-56F), filed September 8, 1980. Applicant: SORENSEN TRANSPORTATION COMPANY, INC., 6 Old Amity Rd., Bethany, CT 06525. Representative: Gerald A. Joseloff, P.O. Box 3258, Hartford, CT 06103. Transporting *clothing and wearing apparel, and equipment, materials and supplies* used in the manufacture, distribution and sale of clothing and wearing apparel, between points in KY, AL, CT, DE, FL, GA, ME, MD, MA, NH, NJ, NY, NC, PA, RI, SC, TN, VT, VA, WV, and DC.

MC 5945 (Sub-57F), filed September 9, 1980. Applicant: SORENSEN TRANSPORTATION COMPANY, INC., 6 Old Amity Rd., Bethany, CT 06525. Representative: Gerald A. Joseloff, P.O. Box 3258, Hartford, CT 06103. Transporting *printed matter,* and *materials, equipment and supplies* used in the manufacture and distribution of printed matter, between points in MO, on the one hand, and, on the other, points in MA, NJ, CT, and NH.

Note.—Applicant intends to tack the authority sought herein with its existing authority at CT.

MC 108937 (Sub-67F), filed September 8, 1980. Applicant: MURPHY MOTOR FREIGHT LINES, INC., 2323 Terminal Rd., St. Paul, MN 55113. Representative: Jerry E. Hess, P.O. Box 43640, St. Paul, MN 55164. Transporting *general commodities* (except those of unusual value, classes A and B explosives, household goods as defined by the Commission, commodities in bulk, and those requiring special equipment), (1) between Owatonna and Winona, MN, over U.S. Hwy 14, serving all intermediate points, and the off-route points of ntorville, Douglas, Altura, Beaver, Alba, and Rollingstone, (2) between Austin and La Crescent, MN, over U.S. Hwy 16, serving all intermediate points, and the off-route points of Elkton, Wykoff, Rushford, Hart, Ridgeway and Money Creek, MN, (3) between Dodge Center, MN and junction U.S. Hwy 63 and MN Hwy 56, over MN Hwy 56, serving all intermediate points, and the off-route point of Sargeant, MN, (4) between Rochester, MN and junction U.S. Hwy 63 and MN Hwy 56, over U.S. Hwy 63, serving all intermediate points, and the off-route points of Rock Dell, Simpson, Ostrander, Cherry Grove, Greenleafton, and Granger, MN, (5) between Harmon and Hokah, MN, over MN Hwy 44, serving all intermediate points and the off-route points of Henrytown, Eitzen and Brownsville, MN, (6) between Rochester and Harmony, MN, over U.S. Hwy 52, serving all intermediate points, and (7) between junctions U.S. Hwy 14

and MN Hwy 42 and junction MN Hwy 42 and U.S. Hwy 61, over MN Hwy 42, serving the intermediate points of Elgin and Plainview, MN, and the off-route points of Viola, MN.

MC 115826 (Sub-595F), filed September 9, 1980. Applicant: W. J. DIGBY, IN., 6015 East 58th Ave., Commerce City, CO 80022. Representative: Jack B. Wolfe, 350 Capitol Life Center, 1600 Sherman St., Denver, CO 80203. Transporting *meat*, from Redmond, OR to Chicago, IL.

MC 117686 (Sub-290F), filed September 9, 1980. Applicant: HIRSCHBACH MOTOR LINES, INC., 920 West 21st St., South Sioux City, NE 68776. Representative: George L. Hirschbach (same address as applicant). Transporting *floor coverings, and materials, equipment and supplies* used in the installation, manufacture and distribution of floor coverings, (1) between Lyerly, GA; Belton, Calhoun Falls, Greenville, and Landrum, SC and points in AZ, CA, NV, NM, OR, UT, and WA, and (2) between Sparks, NV, and points in CA, OR, and WA.

MC 118537 (Sub-12F), filed September 9, 1980. Applicant: MARX TRUCK LINE, INC., 220 Lewis Boulevard, Sioux City, IA 51101. Representative: Robert L. rx (same address as applicant). Transporting (1) *non-alcoholic beverages, and equipment, materials and supplies* used in the manufacture and distribution of non-alcoholic beverages (except commodities in bulk in tank vehicles), between points in Woodbury County, IA, Dakota County, NE, and Union County, SD, on the one hand, and, on the other, points in IL, IN, IA, MN, MO, NE, SD, and WI, (2) *malt beverages*, between points in Woodbury County, IA, Dakota County, NE, and Union County, SD, on the one hand, and, on the other, points in Hennepin, Ramsey and Dakota Counties, MN, and LaCrosse County, WI.

MC 126327 (Sub-15F), filed September 8, 1980. Applicant: TRAILS TRUCKING, INC., 1825 De La Cruz Blvd., Suite 11, Santa Clara, CA 95050. Representative: Laura M. Robinson (same address as applicant). Transporting *clay and clay products* (except in bulk), from points in Lake County, OR, to points in AZ, CA, CO, ID, MT, NV, NM, OR, UT, WA, and WY.

MC 127047 (Sub-44F), filed September 10, 1980. Applicant: ED RACETTE & SON, INC., 6012 No. Broadway, Wichita, KS 67219. Representative: William B. Barker, 641 Harrison St., P.O. Box 1979, Topeka, KS 66601. Transporting (1) *aquariums and aquarium parts and accessories*, from Gardner and Wichita, KS, to points in the U.S. (except AK and HI), and (2) *materials and supplies*, used in the manufacture and distribution of the commodities in (1) (except in bulk), in the reverse direction.

MC 128007 (Sub-161F), filed September 11, 1980. Applicant: HOFER, INC., 20th and 69 Bypass, P.O. Box 583, Pittsburg, KS 66762. Representative: Larry E. Gregg, 641 Harrison St., P.O. Box 1979, Topeka, KS 66601. Transporting *volcanic ash*, from points in Norton County, KS to points in the U.S.

MC 128117 (Sub-41F), filed September 10, 1980. Applicant: NORTON-RAMSEY MOTOR LINES, INC., P.O. Box 896, Hickory, NC 28601. Representative: Francis J. Ortman, 7101 Wisconsin Ave., Suite 605, Washington, DC 20014. Transporting *new furniture and furniture parts*, from points in Stephens County, GA, to points in TX, LA, OK, AR, and CO.

MC 139906 (Sub-125F), filed September 10, 1980. Applicant: INTERSTATE CONTRACT CARRIER CORPORATION, P.O. Box 30303, Salt Lake City, UT 84127. Representative: Richard A. Peterson, P.O. Box 81849, Lincoln, NE 68501. Transporting *such commodities* as are produced, used or dealt in by manufacturers of health care products, between points in the U.S.

MC 143776 (Sub-4F), Applicant: C.D.B. INCORPORATED, 155 Spaulding, S.E., Grand Rapids, MI 49506. Representative: Karl L. Gotting, 1200 Bank of Lansing Bldg., Lansing, MI 48933. Transporting *mineral wool insulation*, from Rogers, TX, to points in KS, IA, NE, and MO.

MC 145437 (Sub-20F), filed September 8, 1980. Applicant: JWI TRUCKING, INC., 8100 N. Teutonia Ave., Milwaukee, WI 53209. Representative: Michael J. Wyngaard, 150 East St., Madison, WI 53703. Transporting *wearing apparel*, between points in the U.S. (except AK and HI), under continuing contract(s) with J. Riggings, a division of U.S. Specialty Retailing, Inc., a division of U.S. Shoe Corporation, of Norcross, GA.

MC 146927 (Sub-16F), filed September 11, 1980. Applicant: DIXIE TRANSPORT, INC., P.O. Box 1126, Hattiesburg, MS 39401. Representative: William P. Jackson, Jr., P.O. Box 1240, Arlington, VA 22210. Transporting *salt and salt products*, from points in Harris and Ft. Bend Counties, TX, to points in OK, AR, LA, MS, TN, AL, GA, FL, NC, and SC.

MC 147636 (Sub-10F), filed August 29, 1980. Applicant: LARRY E. HICKOX, d.b.a., LARRY E. HICKOX TRUCKING, Box 95, Casey, IL 62420. Representative: Michael W. O'Hara, 300 Reisch Bldg., Springfield, IL 62701. Transporting *general commodities*, between points in Miami County, OH, on the one hand, and on the other, points in AZ, CA, CO, ID, NV, NM, OR, UT, WA, and WY.

MC 148016 (Sub-7F), filed September 8, 1980. Applicant: McWHORTER-GRAY ENTERPRISES, INC., 1010 Hwy. 15 No., Ripley, MS 38663. Representative: R. L. McWhorter (same address as applicant). Transporting *Air conditioning equipment, furnaces, component parts, and accessories* for the foregoing commodities, between points in the U.S., under continuing contract(s) with Carrier Corporation, of Syracuse, NY.

Volume No. OP4–058

Decided: September 18, 1980.

By the Commission, Review Board Number 3, Members Parker, Fortier and Hill.

MC 67646 (Sub-92F), filed August 21, 1980, and previously noticed in the **Federal Register** issue of September 4, 1980. Applicant: HALL'S MOTOR TRANSIT COMPANY, a corporation, 6060 Carlisle Pike, Mechanicsburg, PA 17055. Representative: Edward W. Kelliher (Same address as applicant). Transporting *general commodites* (except those of unusual value, classes A and B explosives, household goods as defined by the Commission, commodities in bulk, and those requiring special equipment), serving Vesper, WI, as an off-route point in connection with carrier's otherwise authorized regular-route operations.

Note.—Applicant intends to tack the requested authority to its exising authority. This republication is to indicate applicant's intention to tack.

Agatha L. Mergenovich,

Secretary.

[FR Doc. 80–29488 Filed 9–23–80; 8:45 am]

BILLING CODE 7035–01–M

Motor Carrier Temporary Authority Application

The following are notices of filing of applications for temporary authority under Section 10928 of the Interstate Commerce Act and in accordance with the provisions of 49 CFR 1131.3. These rules provide that an original and two (2) copies of protests to an application may be filed with the Regional Office named in the **Federal Register** publication no later than the 15th calendar day after the date the notice of the filing of the application is published in the **Federal Register.** One copy of the protest must be served on the applicant, or its authorized representative, if any, and the protestant must certify that such service has been made. The protest must identify the operating authority upon which it is predicated, specifying the "MC" docket and "Sub" number and

quoting the particular portion of authority upon which it relies. Also, the protestant shall specify the service it can and will provide and the amount and type of equipment it will make available for use in connection with the service contemplated by the TA application. The weight accorded a protest shall be governed by the completeness and pertinence of the protestant's information.

Except as otherwise specifically noted, each applicant states that there will be no significant effect on the quality of the human environment resulting from approval of its application.

A copy of the application is on file, and can be examined at the ICC Regional Office to which protests are to be transmitted.

Note.—All applications seek authority to operate as a common carrier over irregular routes except as otherwise noted.

Motor Carriers of Property

Notice No. F–59

The following applications were filed in Region 2. Send protests to: ICC, Federal Reserve Bank Bldg., 101 N. 7th St., Room 620, Philadelphia, PA 19106.

MC 21866 (Sub-II–29TA), filed September 2, 1980. Applicant: WEST MOTOR FREIGHT, INC., 740 S. Reading Ave., Boyertown, PA 19512. Representative: Alan Kahn, 1430 Land Title Bldg., Philadelphia, PA 19110. *Industrial fasteners, automotive parts* and *materials, equipment and supplies used in the equipment maintenance and automotive parts industries* (except commodities in bulk), (1) From Elizabethtown, KY to Union, NJ. (2) From Middletown, CT to Elizabethtown, KY, for 270 days, restricted to the transportation of traffic originating at or destined to the facilities of Bowman Distribution Division, Barnes Group, Inc. An underlying ETA seeks 120 days authority. Supporting shippers: Bowman Distribution Division, Barnes Group, Inc., 850 E. 72nd St., Cleveland, OH 44103.

MC 136782 (Sub-II–1TA), filed September 2, 1980. Applicant: R.A.N. TRUCKING CO., P.O. Box 128, Eau Claire, PA 61030. Representative: H. Barney Firestone, 10 S. LaSalle St., Suite 1600, Chicago, IL 60603. *Meat, meat products, meat by products, dairy products, and articles distributed by meat packing houses as defined in Appendix 1 to the report and descriptions of motor carriers certificate 61 M.C.C. 209 and 766,* between the facilities of Northside Packing Company located at Pittsburgh, PA on the one hand, and, on the other, points in TX, LA, OK, FL, AL, KS, MO, AR, MS, KY, TN, GA, NC, and SC, for 270 days. Supporting shippers: Northside Packing Co., 3200 Spring Garden Ave., Pittsburgh, PA 14320.

MC 148558 (Sub-II–1TA), filed September 2, 1980. Applicant: VICTOR SHIMONIS, 11 Reynolds St., Hughestown, PA 18640. Representative: Joseph A. Keating, Jr., 121 S. Main St., Taylor, PA 18517. *Disposible polystyrene articles used in the food service industry,* from the facilities of Genpak Corp., at Middletown, NY to points in the US (except AK, HI, IN, IL, OK, MI & KY), for 270 days. An underlying ETA seeks 120 days authority. Supporting shipper(s): Genpak Corp., P.O Box 27, Glens Falls, NY 12801.

MC 21866 (Sub-II–30TA), filed September 2, 1980. Applicant: WEST MOTOR FREIGHT, INC., 740 S. Reading Ave., Boyertown, PA 19512. Representative: Alan Kahn, 1430 Land Title Bldg., Philadelphia, PA 19110. *Confectionery and confectionery products,* from the facilities of Just Born, Inc. at Bethlehem, PA, to points in CT, MA, NJ, NY, and RI, for 270 days. An underlying ETA seeks 120 days authority. Supporting shipper(s): Just Born, Inc., 1300 Stefco Blvd., Bethlehem, PA 18018.

MC 119632 (Sub-II–15TA), filed September 2, 1980. Applicant: REED LINES, INC., 634 Ralston Ave., Defiance, OH 43512. Representative: Wayne C. Pence (same as applicant). *Such commodities as are manufactured, processed, distributed or dealt in by food business houses* (except frozen or in bulk) *and materials equipment and supplies used in the manufacture, sale and distribution of such commodities* (except frozen or in bulk) between points in and east of MN, IA, MO, AR and LA, for 270 days. Restricted to traffic originating at or destined to facilities utilized by Nabisco, Inc., Giant Eagle Markets, Inc., and Spartan Stores, Inc. Supporting shippers: Nabisco, Inc., East Hanover, NJ 07936, Giant Eagle Markets, Inc., 101 Kappa Drive, Pittsburgh PA 15238, Spartan Stores, Inc., 850 76th St. S.W., Grand Rapids, MI 49508.

MC 151346 (Sub-II–2TA), filed September 3, 1980. Applicant: ZEE CORPORATION, P.O. Box 693, Langhorne, PA 19047. Representative: Robert W. Flowers, P.O. Box 248, Langhorne, PA 19047. *Contract, irregular:* (a) *iron and steel articles* between Perth Amboy, NJ and points in the United States (except Alaska and Hawaii) and between points in the United States (except Alaska and Hawaii) restricted to movements on Raritan River Steel Company Bills of Lading or on commercial Bills of Lading when freight charges are to be billed to Raritan River Steel Company, and (b) *materials, equipment, and supplies used in the installation, manufacture, sale, or production of iron and steel articles* under continuing contracts with Raritan River Steel Company for 270 days. An underlying ETA seeks 120 days authority. Supporting shipper: Raritan River Steel Co., 225 Elm Street, P.O. Box 309, Perth Amboy, NJ 08862.

MC 151710 (Sub-II–1TA), filed September 2, 1980. Applicant: SCOT WAREHOUSE CORPORATION, 2000 South 71st St., Philadelphia, PA 19142. Representative: Robert L. Cope, 1730 M St., N.W., Suite 501, Washington, D.C. 20036. *Contract, irregular: General commodities* (except household good as defined by the Commission and Classes A and B explosives), between IL, PA, and NJ, on the one hand, and, on the other, points in AZ, CA, CO, DE, FL, GA, IL, IN, KS, MN, MO, NJ, NY, NV, OR, PA, TX, VT, and WA, under continuing contract with East-West Shippers Association, Inc. of Chicago, IL and West Coast Shippers Association, Inc. of Philadelphia, PA, for 270 days. Supporting shippers: East-West Shippers Assn., Inc., 414 Plaza Drive, Suite 105, Westmont, IL 60559; West Coast Shippers Assn., Inc., 2000 South 71st St., Philadelphia, PA 19142.

MC 142008 (Sub-II–29TA), filed September 2, 1980. Applicant: WILLIAM C. THOMAS, Route 1, Box 260, Trappe, MD 21673. Representative: Robert B. Pepper, 168 Woodbridge Ave., Highland Park, NJ 08904. *Contract,* over *irregular:* (1) *scrap plastic,* from points in FL, IL, IN, MI, NC, PA, SC and TN to Newark, NJ, and (2) Ink, except in bulk from Newark, Belleville and Fairfield, NJ to pts in the US east of the Mississippi River for 270 days. Supporting shippers: T.D.-A.L.A. Plastics, Inc., 850 Frelinghuysen Ave., Newark, NJ 07114 and Synfax Manufacturing, Inc., 681 Main St., Belleville, NJ 07109.

MC 135364 (Sub-II–7TA), filed September 15, 1980. Applicant: MORWALL TRUCKING, INC., Rural Delivery 3, Box 76C, Moscow, PA 18444. Representative: J. G. Dail, Jr., P.O. Box LL McLean, VA 22101. *Contract: Irregular:* (1) *Refrigerators, freezers, air conditioning and heating units, appliances, and (2) parts, equipment, materials, and supplies used in the manufacture, repair, and distribution of the commodities named in (1),* between points in the U.S. (including AK but excluding HI), for 270 days. Supporting shipper: Amana Refrigeration, Inc., Amana, IA 52204.

MC 118865 (Sub-II-1TA), filed September 12, 1980. Applicant: CEMENT EXPRESS, INC., Hokes Mill Rd. and Lemon St., York PA 17404. Representative: Jerome M. Mulroy (same as applicant). *Cement (Portland and Masonry, in bulk or package),* from York, PA to pts. in AL, FL, GA, IL, IN, MI, SC, and WI for 270 days. An underlying ETA seeks 120 days authority. Supporting shipper: Medusa Cement Co, P.O. Box 5668, Cleveland, OH 44101.

MC 151839 (Sub-II-1TA), filed September 11, 1980. Applicant: C & S TRUCKING, INC., 4717 W. Military Hwy., Chesapeake, VA 23320. Representative: Blair P. Wakefield, Suite 1001, First and Merchants Nat'l Bank Bldg., Norfolk, VA 23510. Contract, irregular: *Paper and paper products, lumber products, particleboard, and chemicals, in containers or in trailers, restricted to traffic having a prior or subsequent movement by rail or water,* between pts. in VA, between pts. in VA and NC, and from Franklin, Waverly, Laurel and Richmond, VA, and Jamestown, NC to Baltimore, MD, for 270 days. Supporting shipper: Union Camp Corp., 1600 Valley Rd., Wayne, NY 07470.

MC 123200 (Sub-II-1TA), filed September 12, 1980. Applicant: AKRON CARTAGE CO., INC., 790 W. Wilbeth Rd., P.O. Box 143, Akron, OH 44309. Representative: David A. Turano, 100 E. Broad St., Columbus, OH 43215. *Meats, meat products and meat byproducts, dairy products, and articles distributed by meat-packing houses, as described in Sections A, B and C of Appendix I to the Report in Descriptions in Motor Carrier Certificates, at 61 M.C.C. 209 and 766 (except hides and commodities in bulk)* between Akron, OH, on the one hand, and, on the other, pts. in OH; WV; Allegheny, Beaver, Butler and Westmoreland Counties, PA; Boone, Boyd, Campbell, Kenton, Pike and Perry Counties, KY; and Buchanan County, VA for 270 days. Applicant intends to interline. Supporting shippers: The Rath Packing Co., P.O. Box 330, Waterloo, IA 50704; Swift Independent Packing Co., 343 E. Wood St., Youngstown, OH 44501.

MC 27817 (Sub-II-4TA), filed September 5, 1980. Applicant: H. C. GABLER, INC., Rural Delivery No. 3, P.O. Box 220, Chambersburg, PA 17201. Representative: Christian V. Graf, 407 N Front St., Harrisburg, PA 17101. *Such merchandise as is dealth in or distributed by pharmaceutical houses* (except commodities in bulk), between Greenville, SC, on the one hand, and, on the other, Norwich and North Norwich, NY. Supporting shipper: Norwich-Eaton Pharmaceuticals Division of Morton-Norwich, Norwich, NY 13815.

MC 107006 (Sub-II—1TA), filed September 8, 1980. Applicant: THOMAS KAPPEL, INC., P.O. Box 1408, Springfield, OH 45501. Representative: John L. Alden, 1396 W. Fifth Ave., Columbus, OH 43212. *Animal bedding and equipment, materials and supplies used in the conduct of the janitorial supply and building maintenance business, except commodities in bulk,* between Franklin County, OH, on the one hand, and, on the other, points in Atlanta, GA; Chicago, IL; Kansas City, KS; Detroit, MI; Minneapolis, MN; St. Louis, MO; and Middleton and Paris, TN. An underlying ETA seeks 120 days authority. Supporting shipper: The Werner Company, 6690 Hayhurst St., Worthington, OH 43085.

MC 147906 (Sub-II-6TA), filed September 8, 1980. Applicant: KOHN BEVERAGE, INC. d.b.a. KOHN TRANSPORT, 2850 Southway, S.W., Canton, OH 44706. Representative: David A. Turano, 100 E. Broad St. Columbus, OH 43215. *(1) Soap, cleaning compounds, fuel air conditioners, ice control compounds, chemicals, automotive cleaners, automotive waxes, fuel additives, oil additives, household deodorants and household disinfectants (except commodities in bulk), and (2) materials, equipment and supplies used in the manufacture and distribution of the commodities in (1) above (except commodities in bulk)* between the facilities of Malco Products, Inc. at Barberton, OH, on the one hand, and, on the other, points in and east of WI, IL, KY, TN, NC and SC for 270 days. Supporting shipper: Malco Products, Inc., 361 Fairview Ave., P.O. Box 892, Barberton, OH 44203.

MC 151756 (Sub-II-1TA), filed September 8, 1980. Applicant: JAMES A NULF d.b.a. J & J EQUIPMENT, 519 W. Clark St., E. Palestine, OH 44413 Representative: William J. Lavelle, 2310 Grant Bldg., Pittsburgh, PA 15219. *Irregular route, contract carrier, Metal office furniture, and office furnishings and supplies,* between points in Trumbull and Mahoning Counties, OH and Beaver County, PA on the one hand, and, on the other, points in Allegheny Beaver, Butler, Washington and Westmoreland Counties, PA. RESTRICTION: The operations authorized herein are limited to a transportation service to be performed, under a continuing contract, or contracts, with G. F. Business Equipment, Inc. of Youngstown, OH for 270 days. An underlying ETA seeks 120 days. Supporting shipper: G. F. Business Equipment, Inc., 32 E. Dennick Ave., Youngstown, OH.

MC 125335 (Sub-2-15TA), filed September 10, 1980. Applicant: GOODWAY TRANSPORT, INC., P.O. Box 2283, York, PA 17405. Representative: Gailyn L. Larsen, P.O. Box 82816, Lincoln, NE 78501. *Frozen foods,* from Vineland, NJ, to points in CT, DE, MA, MD, ME, NH, NY, PA, RI, VA, VT, and DC, for 270 days. An underlying ETA seeks 120 days authority. Supporting shipper: Southland Frozen Foods, One Linden Place, Great Neck, NJ.

MC 151807 (Sub-II-1TA), filed September 11, 1980. Applicant: FWC INCORPORATED, Rt. 2, Box 123, Rustburg, VA 24588. Representative: J. Johnson Eller, Jr., 513 Main St., Altavista, VA 24517. *New furniture,* from Pulaski County, VA to points in FL, for 270 days. Supporting shipper(s): Coleman Furniture Corp., P.O. Box 908, Pulaski, VA 24301.

MC 13134 (Sub-II-16TA), filed September 11, 1980. Applicant: GRANT TRUCKING, INC., POB 256, Oak Hill, OH 45656. Representative: James M. Burtch, 100 E. Broad St., Columbus, OH 43215. (1)*Refractory materials, foundry facings, sand, sand additives, common clay, ground bituminous coal,* and (2) *materials, equipment and supplies,* used in the manufacture and/or processing and distribution of (1) above, between points in Greenup County, KY, on the one hand, and, on the other, points in AL, GA, IL, IN, MI, MO, NC, OH, PA, TN, VA, WI and WV, for 270 days. Supporting shipper: Industrial Supply House of Greenup, Inc., POB 647, Greenup, KY 41144.

MC 125335 (Sub-2-16TA), filed September 11, 1980. Applicant: GOODWAY TRANSPORT, INC., P.O. Box 2283, York, PA 17405. Representative: Gailyn L. Larsen, P.O. Box 82816, Lincoln, NE 68501. *Foodstuffs and citrus byproducts,* from points in Lake, Orange and Polk Counties, FL, to points in the US (except AK and HI), for 270 days. Supporting Shipper: Citrus Central, Inc., P.O. Box 17774, Orlando, FL.

The following protests were filed in Region 4. Send protests to: Consumer Assistance Center, Interstate Commerce Commission, 219 South Dearborn Street, Room 1304, Chicago, IL 60604.

MC 111274 (Sub-4-3TA), filed September 11, 1980. Applicant: SCHMIDGALL TRANSFER INC., P.O. Box 351, Morton, IL 61550. Representative: Frederick C. Schmidgall, Box 351, Morton, IL. 61550. *Contract* irregular: *Lumber and lumber mill*

products and insulation sheeting from MO, KS, LA, IL, WA, ID, MT, OR, AR, MS, AL, GA, SC and FL to WA, MN, IL and IA under a continuing contract with Lumbermens Service Inc. Supporting Shipper: Lumbermens Service Inc., 6124 McKee Road, Madison, WI 53711.

MC 123194 (Sub-4–2TA), filed September 11, 1980. Applicant: ENTERPRISE TRUCK LINE, INC., 7336 W. 15th Ave., Gary, IN 46406. Representative: Anthony E. Young, 29 S. LaSalle St., Chicago, Illinois 60603. *Such merchandise as is dealt in by wholesale, retail and chain grocery and food business houses* from Louisville, KY to Indianapolis, IN. Supporting shipper: John Sexton & Co. 222 S. Riverside Plaza, Chicago, IL 60606.

MC 107295 (Sub-4–20TA), filed September 11, 1980. Applicant: PRE-FAB TRANSIT CO., P.O. Box 146, Farmer City, IL 61841. Representative: Duane Zehr (same address as applicant). *Composition board and water repelling materials* (except commodities in bulk), from all points in MI, to all points in the U.S. (except AK and HI); and *materials, equipment, and supplies* used in the manufacture and distribution of composition board and water repelling materials, from all points in the U.S. to all points in MI. Supporting shipper: Sherpherd Products Co., 1018 Staples Ave., P.O. Box 427, Kalamazoo, MI.

MC 107295 (Sub-4–19TA), filed September 11, 1980. Applicant: PRE-FAB TRANSIT CO., P.O. Box 146, Farmer City, IL 61841. Representative: Duane Zehr (same address as applicant). *Paper and paper products,* from Monroe and West Monroe, LA, to all points in the US (except AK and HI); and *materials, equipment, and supplies* used in the manufacture and distribution of paper and paper products, from all points in the US (except AK and HI), to Monroe and West Monroe, LA. Restricted to traffic originating at or destined to facilities utilized by Mansville Forest Products Corporation. Supporting shipper: Mansville Forest Products Corp., P.O. Box 488, West Monroe, LA 71291.

MC 107295 (Sub-4–18TA), filed September 11, 1980. Applicant: PRE-FAB TRANSIT CO., P.O. Box 146, Farmer City, IL 61841. Representative: Duane Zehr (same address as applicant). *Composition board,* from Atlanta, GA; Syracuse, NY; and points in Genesee County, MI, to all points in the U.S. (except AK and HI), and *materials, equipment and supplies* used in the manufacture and distribution of composition board, from all points in the U.S. (except AK and HI), to points in Genesee County, MI; Atlanta, GA; and Syracuse, NY. Supporting shipper: Super "K" Industries, 5260 N. Genesee Rd., Flint, MI 48506.

MC 151815 (Sub-4–2TA), filed September 15, 1980. Applicant: MIKE & SEB, INC., d.b.a. LOMBARDO BROS. CARTAGE COMPANY, 4043 N. Long Ave., Chicago, IL 60641. Representative: Daniel O. Hands, Suite 200, 205 W. Touhy Ave., Park Ridge, IL 60068. Contract; Irregular. *Garments,* between Elk Grove Village, IL, on the one hand, and, on the other, points in IL, IN, and WI, under continuing contract(s) with Trader Pacific International of Elk Grove Village, IL. Supporting shipper: Trader Pacific International, Ltd., 2881 Carl Street, Elk Grove Village, IL.

MC 16903 (Sub-4–3TA), filed September 15, 1980. Applicant: MOON FREIGHT LINES, INC., P.O. Box 1275, Bloomington, IN. Representative: Donald W. Smith, P.O. Box 40248, Indianapolis, IN 46240. *Elevators, escalators, and materials equipment and supplies used in the manufacture and distribution of elevators and escalators,* between Bloomington, IN, on the one hand, and, on the other, points in the U.S. in and east of ND, SD, NE, CO, OK, and TX. Supporting shipper: Otis Elevator Company, Bloomington, IN.

MC 110998 (Sub-4–50), filed September 15, 1980. Applicant: SCHNEIDER TANK LINES, INC., 4321 W. College Avenue, Appleton, WI 54911. Representative: Patrick M. Byrne, P.O. Box 2298, Green Bay, WI 54306. *Commodities dealt in, or used by, manufacturers and distributors of resins and foundry core products* between the facilities of Delta Resins and Refractories at or near Milwaukee, WI and points in the United States (except AK and HI). Supporting shipper: Delta Resins and Refractories, 6263 North Teutonia Avenue, Milwaukee, WI 53209.

MC 138388 (Sub-4–1TA), filed September 15, 1980. Applicant: CHESTER CAINE, JR., d.b.a. CAINE TRANSFER, Box 376, Lowell, WI 53557. Representative: James A. Spiegel, Esq., Olde Towne Office Park, 6425 Odana Road, Madison, WI 53719. *Cheese and cheese products, artificial cheese and artificial cheese products, and materials, equipment and supplies* used in the manufacture of cheese between points in IA, IL, IN, MN, OH, and WI. Restricted to shipments originating or terminating at facilites owned or used by Borden Foods Division, Borden, Inc. An underlying ETA seeks 120 days authority. Supporting shipper: Borden Food Division, Borden, Inc., Plymouth, WI 53073.

MC 149137 (Sub-4–4TA), filed September 15, 1980. Applicant: MASTER TRANSPORT SERVICES, INC., Suite 203, 5000 Wyoming, Dearborn, MI 48126. Representative: William B. Elmer, 21635 East Nine Mile Road, St. Clair Shores, MI 48080. *Industrial cleaning compounds, lubricants, and disinfectants,* between points in Wayne County, MI, on the one hand, and, on the other, points in CO, GA, IA, IL, IN, KS, KY, MN, MO, MT, NE, OH, OK, PA, SD, WV and WI. Supporting shipper: Wyandotte Division of The Diversey Corporation, 1626 Biddle Avenue, Wyandotte, MI 48192.

MC 98952 (Sub-4–2), filed September 11, 1980. Applicant: GENERAL TRANSFER COMPANY, 2880 N. Woodford Street, Decatur, 62526. Representative: Phillip W. Edmiston, 2880 N. Woodford Street, Decatur, 62526. *Confectionary and candy items,* in mechanically refrigerated equipment, except in bulk, from M&M/Mars, a division of Mars, Incorporated at or near Cincinnati, OH to points in IN and KY, restricted to traffic originating at named origin and destined to named destinations. Supporting shipper: M&M Mars, High Street, Hackesttstown, NJ 07840.

MC 20992 (Sub-4–1TA), filed September 12, 1980. Applicant: DOTSETH TRUCK LINE, INC., Knapp, WI 54749. Representative: Bradford E. Kistler, P.O. Box 82028, Lincoln, NE 68501. *Building materials,* from Columbus, WI and its commercial zone, to Secaucus and Hackensack, NJ and their commercial zones, and Los Angeles, CA and its commercial zone. Supporting shipper: Lyco Manufacturing, Inc., 227 North Highway 51, Arlington, WI 53911.

MC 145623 (Sub-4–3TA), filed September 12, 1980. Applicant: O. K. MESSENGER SERVICE, INC., 9107 Telegraph Road, Taylor, MI 48180. Representative: Edwin M. Snyder, 22375 Haggerty Road, P.O. Box 400, Northville, MI 48167. *Contract;* irregular: *Iron and steel articles* between Bellefontaine, Columbus, and Toledo, OH on the one hand, and, on the other, points in MI, IN, KY, WV, PA, NY, NJ, MD, IL, WI, and IA under a Contract or continuing Contracts with Carter Steel and Fabricating Co. An underlying ETA seeks 120 days authority. Supporting shipper: Carter Steel and Fabricating Co., Marvin Silverstein, President, P.O. Box 70, Bellefontaine, OH 43311.

MC 110053 (Sub-4–1TA), filed September 12, 1980. Applicant: ILLINOIS STATE MOTOR SERVICE, INC., 1800 W. 31st St., Chicago, IL 60608. Representative: James R. Madler, 120 W. Madison St., Chicago, IL 60602. *Iron and steel, iron and steel articles,* between

Putnam County, IL, on the one hand, and, on the other, points in Michigan. Supporting shipper: J & L Steel, P.O. Box 325, Hennepin, IL 61327.

MC 103993 (Sub-4-20TA), filed September 12, 1980. Applicant: MORGAN DRIVE-AWAY, INC., 28651 U.S. 20 West, Elkhart, IN 46515. Representative: James B. Buda, (same address as applicant). *Lumber and Wood Products,* between points in VA and WV, on the one hand, and, on the other, points in and east of MN, IA, MO, AR, and LA. Supporting shipper: Lawrence R. McCoy and Company, Inc., Worcester, MA 01608.

MC 124078 (Sub-4-35TA), filed September 12, 1980. Applicant: SCHWERMAN TRUCKING CO., 611 South 28th Street, Milwaukee, WI 53215. Representative: Richard H. Prevette, P.O. Box 1601, Milwaukee, WI 53201. *Coke,* from Decatur, Florence, Guntersville, and Sheffield, AL; and Chattanooga and Knoxville, TN to the States of AL, GA, MS, and TN, including but not limited to Bridgeport, Birmingham, Roberta and Mt. Meigs, AL; Atlanta, Rockmart and Cartersville, GA; Artesia, MS; and Kingsport, Richard City, Rockwood and Nashville, TN. Supporting shipper: Koch Carbon, Inc., 888 Worcester Street, Wellesley, MA 02181.

MC 151791 (Sub-4-1TA), filed September 11, 1980. Applicant: LES LINDEMAN AND SON, INC., 117 W. Main, Morenci, MI 49256. Representative: John C. Scherbarth, P.O. Box 400, Northville, MI 48167. *Caustic soda beads, in bulk* between Lenawee County, MI, on the one hand, and, on the other, MI, IN, and OH. Supporting shipper: Vulcan Material Co., Earl Arbogast, P.O. Box 12283, Wichita, KS.

MC 115651 (Sub-4-9TA), filed September 11, 1980. Applicant: KANEY TRANSPORTATION, INC., 7222 Cunningham Rd., P.O. Box 39, Rockford, IL 61105. Representative: E. Stephen Heisley, 805 McLachlen Bank Bldg., 666 Eleventh Street, N.W., Washington, D.C. 20001. *Gasoline and fuel oil,* in bulk, in tank vehicles, from East Chicago and Whiting, IN to points in IL on and North of Interstate Route I-80. Supporting shipper: Minuteman Gas 'n Pantry, Inc., Fontana Blvd. & Douglas St., Fontana, WI 53125.

MC 151801 (Sub-4-2TA), filed September 12, 1980. Applicant: VEEN CARTAGE, INC., 9146 S. Kolmar Ave., Oak Lawn, IL 60453. Representative: Stephen H. Loeb, Suite 2027, 33 North LaSalle St., Chicago, IL 60602. *Fabricated steel and steel sheet piling,* from the facilities of Commercial Fabricators, Inc., at Bridgeview, IL to points in MI, WI, NE, CO, MO, IA, OK, and IN. Supporting shipper: Commercial Fabricators, Inc., 7301 South 76th Ave., Bridgeview, IL 60455.

MC 63101 (Sub-4-1TA), filed September 11, 1980. Applicant: KEENE'S TRANSFER, INC., 1019 East Ave., Tomah, WI 54660. Representative: James A. Spiegel, Esq., 6425 Odana Road, Madison, WI 53719. *Malt beverages,* from St. Paul, MN, to Beloit, WI, and to South Beloit, IL. An underlying ETA seeks 120 days authority. Supporting shipper: Beloit Beverage Company, 101 Blackhawk Blvd., South Beloit, IL 61080.

MC 147198 (Sub-4-3TA), filed September 11, 1980. Applicant: P. & E. I. TRUCK LINES, INC., Box 175, Rossville, IL 60963. Representative: Thomas A. Graham, 4 West Seminary Street, Danville, IL 61832. *Food or kindred products and materials, equipment and supplies used in the manufacture, distribution and sale of food or kindred products* between points and places in NE, KS, IN, OH, MI, WI, MN, IA, KY, TN, and IL. Supporting shipper: Ryt Way Packaging, Inc., P.O. Box 537, Northfield, MN 55057.

MC 113751 (Sub-4-3TA), filed September 11, 1980. Applicant: HAROLD F. DUSHEK, INC., 10th and Columbia St., Waupaca, WI 54981. Representative: James A. Spiegel, Esq., 6425 Odana Road, Madison, WI 53719. *Foodstuffs and materials, equipment and supplies used in the manufacture and distribution of such commodities* from the facilities of Ore-Ida Foods, Inc. at or near Wethersfield, CT, Greenville, MI, Massillon, OH, Westchester, PA, and Plover, WI, to points in the U.S. in and east of CO, NE, ND, OK, SD, and TX. Supporting shipper: Ore-Ida Foods, Inc., P.O. Box 10, Boise, ID 83707.

MC 16499 (Sub-4-1TA), filed September 11, 1980. Applicant: ROHDE CARTAGE, INC., P.O. Box 475, Mundelein, IL 60060. Representative: Robert E. Rohde (same address as applicant). *Plastic articles (except in bulk) and materials and supplies used in the manufacture, sales, and distribution of the aforementioned* between the facilities of Parade Packaging Corp., at Mundelein, IL on the one hand, and, points in IN, IA, KY, MI, MO, TN, and WI on the other. An underlying ETA seeks 120 days authority. Supporting shipper: Parade Packaging Corp., 222 South Shaddle, Mundelein, IL 60060.

MC 76993 (Sub-4-1TA), filed September 11, 1980. Applicant: EXPRESS FREIGHT LINES, INC., 4924 South 13th Street, Milwaukee, WI 53221. Representative: Michael J. Wyngaard, 150 East Gilman Street, Madison, WI 53703. *Common*; Regular: *General commodities, except those of unusual value, classes A and B explosives, household goods as defined by the Commission, commodities in bulk, and those requiring special equipment.* (1) Between South Bend, IN and Toledo, OH, serving all intermediate points. From South Bend, IN over U.S. Hwy. 31 to its jct. with I-80-90, then over I-80-90 to Toledo, OH and return over the same route. (2) Between South Bend, IN and Indianapolis, IN, serving all intermediate points. From South Bend, IN, over U.S. Hwy. 31 to Indianapolis, IN and return over the same route. (3) Between the jct. of I-80-90 and I-65 at or near Hammond, IN and Columbus, IN, serving all intermediate points. From the jct. of I-80-90 and I-65 at or near Hammond, IN over I-65 to Columbus, IN and return over the same route. (4) Between Lafayette, IN and Toledo, OH, serving all intermediate points. From Lafayette, IN over I.S. Hwy. 25 to its jct. with U.S. Hwy. 24 at or near Logansport, IN, then over U.S. Hwy. 24 to Toledo, OH, and return over the same route. (5) Between Huntington, IN and Indianapolis, IN serving all intermediate points. From Huntington, IN over I.S. Hwy. 37 to Indianapolis, IN and return over the same route. (6) Between the jct. of I-80-90 and I-69, and Indianapolis, IN, serving all intermediate points. From the jct. of I-80-90 and I-69, over I-69 to Indianapolis, IN and return over the same route. (7) Between Huntington, IN and Anderson, IN, serving all intermediate points. From Huntington, IN over I.S. Hwy. 9 to Anderson, IN and return over the same route. (8) Between Muncie, IN and Indianapolis, IN, serving all intermediate points. From Muncie, IN over I.S. Hwy. 32 to its jct. with I-69, then over I-69 to Indianapolis, IN and return over the same route. (9) Between Merrillville, IN and Ft. Wayne, IN, serving all intermediate points. From Merrillville, IN over U.S. Hwy. 30 to Ft. Wayne, IN and return over the same route. Applicant proposes to tack the requested routes with all existing authority and to interline with other existing carriers. Underlying ETA seeks 120 days authority. Forty-five supporting shippers.

The following applications were filed in Region 6. Send protests to: Interstate Commerce Commission, Region 6 Motor Carrier Board, P.O. Box 7413, San Francisco, CA 94120.

MC 116544 (Sub-6-16TA), filed September 9, 1980. Applicant: ALTRUK FREIGHT SYSTEMS INC., 1703 Embarcadero Road, Palo Alto, CA 94303. Representative: Richard G. Lougee, P.O. Box 10061, Palo Alto, CA 94303. *Such commodities as are dealt in or used by*

manufacturers and distributors of sound, communications, educational and entertainment materials, except commodities in bulk, between Los Angeles, CA; San Jose, CA; Santa Clara, CA; Santa Maria, CA; or Terre Haute, IN, on the one hand, and, on the other, Danbury, CT; West Haven, CT; Terre Haute, IN; Worcester, MA; Hawthorne, NJ or Pitman, NJ, for 270 days. An underlying ETA seeks 120 days authority. Authority is sought to serve the commercial zones of each of the above cities. Restriction: Restricted to shipments originating at or destined to the facilities of CBS records. Supporting shipper: CBS Records, 51 W. 52nd St., New York, NY 10019.

MC 151716 (Sub-6–3 TA), filed September 11, 1980. Applicant: AMERICAN CARGO EXPRESS, INC., 747 Glasgow Avenue, Inglewood, CA 90301. Representative: Miles L. Kavaller, 315 So. Beverly Drive, Suite 315, Beverly Hills, CA 90212. *Contract Carrier,* Irregular routes; *Such commodities as are dealt in by retail chain home improvement stores,* from Pomona, CA to points in TX, for 270 days. Supporting shipper: Handy Dan Home Improvement Centers, Inc., 10960 Wilshire Blvd., Los Angeles, CA 90024.

MC 57254 (Sub-6–1TA), filed September 10, 1980. Applicant: BEST-WAY FREIGHT LINES OF ARIZONA, 1813 East Thomas Rd., Phoenix, AZ 85016. Representative: Donald E. Fernaays, 4040 East McDowell Rd., Suite 320, Phoenix, AZ 85008. *Common carrier,* regular routes, *General commodities,* (except those of unusual value, Classes A and B explosives, household goods as defined by the Commission, commodities in bulk, and commodities requiring special equipment), between Los Angeles, CA and Reno, NV, serving all intermediate points, over I-Hwy 5, and U.S. Hwy 395, and return over the same routes. Authority is requested to tack, interline and serve commercial zones of all points, for 270 days. An underlying ETA seeks 120 days authority. Supporting shippers: There are 20 supporting shippers. Their statements may be examined at the Regional office listed.

MC 134387 (Sub-6–5TA), filed September 10, 1980. Applicant: BLACKBURN TRUCK LINES, INC., 4998 Branyon Ave., South Gate, CA 90280. Representative: Patricia M. Schnegg, Knapp, Grossman & Marsh, 707 Wilshire Blvd., Suite 1800, Los Angeles, CA 90017. *Appliances* between Phoenix, AZ and Las Vegas, NV for 270 days. Supporting shipper: Appliance T.V.-City, 2202 South Seventh St., Phoenix, AZ 85040.

MC 11722 (Sub-6–8TA), filed September 11, 1980. Applicant: BRADER HAULING SERVICE, INC., P.O. Box 655, Zillah, WA 98953. Representative: Philip G. Skofstad, 1525 NE Weidler, Portland, OR 97232. *Forms, concrete construction, metal* between Kent, WA on the one hand, and, on the other, points ion ID, MT and OR for 270 days. Supporting shipper: Economy Forms, 721 W. Meeker, Kent, WA 98031.

MC 113678 (Sub-6–22TA); filed September 15, 1980. Applicant: CURTIS, INC., 4810 Pontiac Street, Commerce City, CO 80011. Representative: Roger M. Shaner (same as above). *General commodities* (except those of unusual value, class A and B explosives, commodities in bulk, household goods as defined by the Commission, and those requiring special equipment) between points in the United States (except AK and HI), restricted to traffic moving on bills of lading or freight forwarders under Part IV of the Interstate Commerce Act as issued by ABC Trans National Transport, Inc., and Acme Fast Freight, Inc., for 270 days. Supporting shipper: ABC–TNT/Acme Fast Freight, 2110 Alhambra Avenue, Los Angeles, California.

MC 136605 (Sub-6–16TA); filed September 11, 1980. Applicant: DAVIS TRANSPORT, INC., Post Office Box 8058, Missoula, MT 59807. Representative: Allen P. Felton, Post Office Box 8058, Missoula, MT 59807. *Lumber and Lumber Products,* from Wadena County, MN to Pierce County, WA (restricted to traffic that will have a subsequent movement by water), for 270 days. Supporting shipper: Tumac Lumber Company, 806 SE Broadway, Portland, OR 97208.

MC 151798 (Sub-6–1TA); filed September 10, 1980. Applicant: DIVERSIFIED FREIGHT HANDLERS, INC., P.O. Box 60623, Fairbanks, AK 99706. Representative: Peter Stepovich (same as applicant). *Contract Carrier,* Irregular routes: *General commodities,* between Fairbanks, AK on the one hand, and, points within 25 miles radius thereof on the other for 270 days. Supporting shipper(s): There are 8 shippers. Their statements may be examined at the Regional office listed.

MC 151811 (Sub-6–1TA); filed September 8, 1980. Applicant: EDWARD L. JERDEE d.b.a. E. L. JERDEE TRUCKING, 1704 Burrell Ave., Lewiston, ID 83501. Representative: William Vern McCann, Jr., 1027 Bryden, Lewiston, ID 83501. (1) *Garage doors and related parts and supplies; lumber, plywood and wood products* from Counties of Oregon: (Yamhill, Polk, & Benton), Counties of WA: (Lewis, Asotin & Stevens), Counties of ID: (Nez Perce, Idaho, Latah, Clearwater & Kootenai), to: MN, ND, SD, WI, IA, NE, CA and MT, for 270 days. Supporting shipper: Twin City Garage Door Corp., 123 15½ St. N., Fargo, ND 58102.

MC 52914 (Sub-6–3TA); filed September 12, 1980. Applicant: FITCHETT TRUCK LINES, INC., P.O. Box 10799, Portland, OR 97210. Representative: Lawrence V. Smart, Jr., 419 NW 23rd Ave., Portland, OR 97210. *general commodities* (except classes A and B explosive) in containers and trailers, for 270 days. An underlying ETA seeks 120 day authority. Supporting shippers: Sysco NW, 12970 SW Hall Blvd., Tigard, OR; Crowley Maritime Corporation, 6208 N. Ensign Street, Portland, OR; Acme Fast Freight, Inc., 1617 SE Water, Portland, OR; ABC Trans National, Inc., 1613 SE Water, Portland, OR.

MC 151799 (Sub-6–1TA), filed September 10, 1980. Applicant: GLENNMAR, INC., 5500 S.W. 315th, Federal Way, WA 98003. Representative: George LaBissoniere, 15 South Grady Way, Suite 233, Renton, WA 98055. *Lumber and lumber products:* between points in WA and OR, on the one hand, and, on the other, points in ID, MT, WY, CA, NV, UT, AZ, NM and CO, for 270 days. Supporting shipper: National Forest Products, P.O. Box 1370, Vancouver, WA 98666.

MC 109689 (Sub-6–8TA), filed September 11, 1980. Applicant: W. S. HATCH CO., P.O. Box 1825, Salt Lake City, UT 84110. Representative: Mark K. Boyle, 10 West Broadway, No. 400, Salt Lake City, UT 84101. *Clay Processed for Catalyzing,* in bulk, from Southgate, CA to Alma, MI, for 270 days. An underlying ETA seeks 120 days authority. Supporting shipper: W. R. Grace & Company, Davison Chemical Division, 4244 Santa Ana Street, Southgate, CA 90280.

MC 147933 (Sub-6–1TA), filed September 12, 1980. Applicant: JOHN H. BRYANT, d.b.a. J. B. TRANSPORTATION, 211 Lea Court, San Pablo, CA 94806. Representative: (same as applicant). *Contract Carrier,* Irregular routes; *paraffin wax* in bulk between Rodeo, CA, and Tacoma, WA; between Richmond, CA, and Tacoma, WA; between Vernon, CA, and Tacoma, WA, for 270 days. An underlying ETA seeks 120 days authority. Supporting shippers: Commencement Bay Corrugated, Inc., P.O. Box 1835, Tacoma, WA; Accurate Packaging Inc., POB 2032, Tacoma, WA.

MC 151800 (Sub-6–1TA), filed September 9, 1980. Applicant: JADCO TRANSPORTATION, 2312 Bledsoe

Lane, Las Vegas, NV 89110. Representative: James A. Davis (same as applicant). *Contract Carrier,* Irregular routes: (1) *Ferrous and non-ferrous shredded scrap metal, smashed auto bodies,* and *precast cement products,* and (2) *decorative rock and sand* not exempt under 49 U.S.C. 10526(a)(12), between points in CA and NV, for 270 days.Supporting shippers: Luria Brothers & Company, Inc., 5850 N. Nellis Blvd., Las Vegas, NV 89114; Mountain Springs Mining Company, d.b.a. Las Vegas Color Rock Company, 1731 Western, Las Vegas, NV 89102.

MC 151837 (Sub-6–1TA), filed September 12, 1980. Applicant: NEIL HARRIS & LA GEAN HARRIS, d.b.a. L & N TRUCKING, 511 Morningstar Lane, Idaho Falls, ID 83401. Representative: David E. Wishney, P.O. Box 837, Boise, ID 83701. *Contract Carrier,* irregular routes; *lumber, lumber mill products and particleboard,* between points in CA, CO, ID, KS, MT, NE, OR, UT, WA and WY for 270 days. Restricted to traffic moving for the account of Edward Hines Lumber Co. An underlying ETA seeks 120 days authority. Supporting shipper: Edward Hines Lumber Co., P.O. Box 129, Lafayette, CO 80026.

MC 14045 (Sub-6–2TA), filed September 9, 1980. Applicant: HAYWOOD L. WASHUM d.b.a. LOS ANGELES-YUMA FREIGHT LINES, P.O. Box 4460, Yuma, AZ 85364. Representative: Harold G. Hernly, Jr., 110 S. Columbus St., Alexandria, VA 22314. *Paper plates, paper bowls, scrap paper and pulp board* between the facilities of Arical Paper Products Co., at or near Yuma, AZ, on the one hand, and, on the other, points in CA, NM, NV, TX and UT, for 270 days. An underlying ETA seeks 120 days authority. Supporting shipper: Arical Paper Products Co., 23rd and Engler Avenue, Yuma, AZ 85364.

MC 138069 (Sub-6–2TA), filed September 10, 1980. Applicant: LUCIUS, INC., 6025 E. 60th Ave., Commerce City, CO 80222. Representative: James P. Peck, 717 17th St., Suite 2600, Denver, CO 80202. (1) *Malt beverages and related advertising materials,* and (2) *empty used beverage containers and materials and supplies used in and dealt with by breweries,* between points in Jefferson County, CO, on the one hand, and, on the other, points in AR and TX, for 270 days. An underlying ETA seeks 120 days authority. Supporting shipper: Adolph Coors Company, Golden, CO 80401.

MC 147161 (Sub-6–4TA), filed September 12, 1980. Applicant: MASS TRANSIT, INC., 2450 Orange Ave., Signal Hill, CA 90806. Representative: Milton W. Flack, 8383 Wilshire Blvd., Suite 900, Beverly Hills, CA 90211. *Contract carrier:* Irregular routes: *railroad ties and railway track rails* from points in CO, MT and NV to points in CA, NV, OR and WA for 270 days. Supporting shipper: Gammel & Ollendick, 511 W. Yosemite Ave., Madera, CA 93639.

MC 142955 (Sub-6–1TA), filed September 11, 1980. Applicant: J & G SWARTZ, INC., 3755 Fenwick Drive, Spring Valley, CA 92077. Representative: David P. Christianson, 707 Wilshire Blvd., Suite 1800, Los Angeles, CA 90017. *Alchoholic beverages,* between TN, KY, IL, OH, NY and TX, and points in CA, for 270 days. Supporting shipper: F & M Importing, 2055 East 51st St., Vernon, CA 90058.

MC 142955 (Sub-6–2TA), filed September 11, 1980. Applicant: J & G SWARTZ, INC., 3755 Fenwick Dr., Spring Valley, CA 92077. Representative: David P. Christianson, 707 Wilshire Blvd., Suite 1800, Los Angeles, CA 90017. *Antique furniture,* from NY, PA, ME, NH, VT, MA, CT, and RI to CA, for 270 days. Supporting shipper: Larry Morgan Antiques, 1685 Toronto Way, Costa Mesa, CA 92626.

MC 138875 (Sub-6–22TA), filed September 9, 1980. Applicant: SHOEMAKER TRUCKING COMPANY, 11900 Franklin Rd., Boise, ID 83709. Representative: F. L. Sigloh (same as applicant). *Plastic articles, granules, beads or powder* (except commodities in bulk), from Kobuta, PA to Elkhart, IN, for 270 days. Supporting shippers: E.F.P., 223 Middleton Run Road, Elkhart, IN 46514.

MC 136897 (Sub-6–18TA), filed September 15, 1980. Applicant: SWIFT TRANSPORTATION COMPANY, INC., 335 West Elwood Rd., Phoenix, AZ 85041. Representative: Donald E. Fernaays, 4040 E. McDowell Rd., Suite 320, Phoenix, AZ 85008. *Contract carrier:* Irregular routes: *Scrap metals,* between Dallas, TX, on the one hand, and, on the other, points in US (except AK and HI), for the account of Dallas Scrap Baling, for 270 days. An underlying ETA seeks 120 days authority. Supporting shipper: Dallas Scrap Baling, 3920 Singleton Blvd., Dallas, TX 75212.

MC 136897 (Sub-6–19TA), filed September 15, 1980. Applicant: SWIFT TRANSPORTATION COMPANY, INC., 335 West Elwood Rd., Phoenix, AZ 85041. Representative: Donald E. Fernaays, 4040 E. McDowell Rd., Suite 320 Phoenix, AZ 85008. *Contract carrier:* Irregular routes: *Iron and steel articles,* between points in TX, on the one hand, and, on the other, points in the US (except AK and HI), for the account of Church and Clark, for 270 days. An underlying ETA seeks 120 days authority. Supporting shipper: Church and Clark, 13561 Denton Dr., Dallas, TX 75234.

MC 26396 (Sub-6–47TA), filed September 12, 1980. Applicant: THE WAGGONERS TRUCKING, P.O. Box 31357, Billings, MT 59107. Representative: Bradford E. Kistler, P.O. Box 820028, Lincoln, NE 68501. (1) *Machinery, equipment, materials and supplies* used in or in connection with the discovery, development, production, refining, manufacture, processing, storage, transmission, and distribution of natural gas and petroleum and their products and by-products; and (2) *Machinery, materials, equipment and supplies* used in or in connection with the construction, operation, repair, servicing, maintenance, and dismantling of pipelines, including the stringing and picking up thereof, between Casper, WY, and points in LA, OK and TX, on the one hand, and, on the other, points in ND, MT, WY, CO, UT, and CA, for 270 days. An underlying ETA seeks 120 days authority. There are 25 shippers. Their statements may be examined at the Regional office listed.

MC 141804 (Sub-6–78TA), filed September 11, 1980. Applicant: WESTERN EXPRESS, DIVISION OF INTERSTATE RENTAL, INC., 4015 Guasti Road, Ontario, CA 91761. Representative: Frederick J. Coffman (same as applicant). *File folders and related materials and supplies,* Mayville, WI to points in MA, MD, NJ, NY and the District of Columbia, for 270 days. Supporting shipper: Robert A. Breen, Traffic Coordinator, Tab Products, 605 4th Street, Mayville, WI 53053.

MC 114897 (Sub-6–2TA), filed September 12, 1980. Applicant: WHITFIEld TANK LINES, INC., 126 W. Thomas, Phoenix, AZ 85011. Representative: T. L. Carpenter (same as applicant). *Hydrochloric or Muriatic Acid,* in bulk, in tank vehicles; from Lea County, NM to points in AZ and TX, and CO, for 270 days. An underlying ETA seeks 120 days authority. Supporting shipper: Climax Chemical Co., P.O. Box 1595, Hobbs, NM 88240.

Agatha L. Mergenovich,

Secretary.

[FR Doc. 80–29485 Filed 9–23–80; 8:45 am]

BILLING CODE 7035–01–M

[Docket No. AB-6 (Sub-78F)]

Burlington Northern, Inc.—Abandonment Between Fairbanks and Seabury, in Whitman County, Wash.; Findings

Notice is hereby given pursuant to 49 U.S.C. 10903 that by an Certificate and Decision decided August 29, 1980, a finding, which is administratively final, was made by the Commission, Review Board Number 5, stating that, the present and future public convenience and necessity permit the abandonment by the Burlington Northern Inc. of a line of railroad known as the Fairbanks to Seabury, WA, line extending from railroad milepost 45.68 near Fairbanks, WA to railroad milepost 47.75 at the end of the line near Seabury, WA, a distance of 2.07 miles, in Whitman County, WA, subject to the conditions for the protection of railway employees prescribed by the Commission in *Oregon Short Line R. Co.—Abandonment Goshen,* 360 I.C.C. 91 (1979). A certificate of public convenience and necessity permitting abandonment was issued to the Burlington Northern Inc. Since no investigation wa instituted, the requirement of § 1121.38(a) of the Regulations that publication of notice of abandonment decisions in the **Federal Register** be made only after such a decision becomes administratively final was waived.

Upon receipt by the carrier of an actual offer of financial assistance, the carrier shall make available to the offeror the records, accounts, appraisals, working papers, and other documents used in preparing Exhibit I (Section 1121.45 of the Regulations). Such documents shall be made available during regular business hours at a time and place mutually agreeable to the parties.

The offer must be filed and served no later than October 9, 1980. The offer, as filed, shall contain information required pursuant to § 1121.38(b) (2) and (3) of the Regulations. If no such offer is received, the certificate of public convenience and necessity authorizing abandonment shall become effective November 10, 1980.

Agatha L. Mergenovich,

Secretary.

[FR Doc. 80-29492 Filed 9-23-80; 8:45 am]

BILLING CODE 7035-01-M

[Docket No. AB-6 (Sub-79F)]

Burlington Northern, Inc.—Abandonment Between Herrin and Herrin Junction, in Williamson County, Ill.: Findings

Notice is hereby given pursuant to 49 U.S.C. 10903 that by a Certificate and Decision decided September 5, 1980, finding, which is administratively final, was made by the Commission, Review Board Number 5, stating that, the present and future public convenience and necessity permit the abandonment by the Burlington Northern Inc. of a line of railroad known as the Herrin to Herrin Junction, IL, line extending from railroad milepost 174.57 near Herrin, IL, and railroad milepost 173.01 near Herrin Junction, IL, a distance of 1.56 miles in Williamson County, IL, subject to the conditions for the protection of railway employees prescribed by the Commission in *Oregon Short Line R. Co.—Abandonment Goshen,* 360 I.C.C. 91 (1979), and further that BN shall keep intact all of the right-of-way underlying the track, including all the bridges and culverts for a period of 120 days from the decided date of the certificate and decision to permit any state or local government agency or other interested party to negotiate the acquisition for public use of all or any portion of the right-of-way. A certificate of public convenience and necessity permitting abandonment was issued to the Burlington Northern Inc. Since no investigation was instituted, the requirements of § 1121.38(a) of the Regulations that publication of notice of abandonment decisions in the **Federal Register** be made only after such a decision becomes administratively final was waived.

Upon receipt by the carrier of an actual offer of financial assistance, the carrier shall make available to the offeror the records, accounts, appraisals, working papers, and other documents used in preparing Exhibit I (Section 1121.45 of the Regulations). Such documents shall be made available during regular business hours at a time and place mutually agreeable to the parties.

The offer must be filed and served no later than October 9, 1980. The offer, as filed, shall contain information required pursuant to § 1121.38(b) (2) and (3) of the Regulations. If no such offer is received, the certificate of public convenience and necessity authorizing abandonment shall become effective November 10, 1980.

Agatha L. Mergenovich,

Secretary.

[FR Doc. 80-29489 Filed 9-23-80; 8:45 am]

BILLING CODE 7035-01-M

[Docket No. AB-1 (Sub-99F)]

Chicago & North Western Transportation Co.—Abandonment in La Salle and Bureau Counties, Ill.; Findings

Notice is hereby given pursuant to 49 U.S.C. 10903 that by a Certificate and Decision decided September 5, 1980, a finding, which is administratively final, was made by the Commission, Review Board Number 5, stating that, the present and future public convenience and necessity permit the abandonment by the Chicago and North Western Transportation Company of a line of railroad known as Troy Grove to LaSalle Junction line including Churchill to Howe, extending from railroad milepost 64.3 near Troy Grove to railroad milepost 72.0 at LaSalle Junction and from railroad milepost 71.1 at Churchill to milepost 2.2 at Setonville Junction, a distance of 12.6 miles, in LaSalle and Bureau Counties, IL, subject to the conditions for the protection of railway employees prescribed by the Commission in *Oregon Short Line R. Co.—Abandonment Goshen,* 360 I.C.C. 91 (1979), and further that C&NW shall keep intact all of the right-of-way underlying the track, including all the bridges and culverts for a period of 120 days from the decided date of the certificate and decision to permit any state or local government agency or other interested party to negotiate the acquisition for public use of all or any portion of the right-of-way. A certificate of public convenience and necessity permitting abandonment was issued to the Chicago and North Western Transportation Company. Since no investigation was instituted, the requirement of § 1121.38(a) of the Regulations that publication of notice of abandonment decisions in the **Federal Register** be made only after such a decision becomes administratively final was waived.

Upon receipt by the carrier of an actual offer of financial assistance, the carrier shall make available to the offeror the records, accounts, appraisals, working papers, and other documents used in preparing Exhibit I (Section 1121.45 of the Regulations). Such

documents shall be made available during regular business hours at a time and place mutually agreeable to the parties.

The offer must be filed and served no later than October 9, 1980. The offer, as filed, shall contain information required pursuant to § 1121.38(b)(2) and (3) of the Regulations. If no such offer is received, the certificate of public convenience and necessity authorizing abandonment shall become effective November 10, 1980.

Agatha L. Mergenovich,

Secretary.

[FR Doc. 80-29490 Filed 9-23-80; 8:45 am]

BILLING CODE 7035-01-M

[Docket No. AB-1 (Sub-100F)]

Chicago & North Western Transportation Co.—Abandonment and Abandonment of Operations Over Lake Superior & Ishpeming Railroad Co., in Marquette County, Mich.; Findings

Notice is hereby given pursuant to 49 U.S.C. 10903 that by a Certificate and Decision decided September 5, 1980, a finding, which is administratively final, was made by the Commission, Review Board Number 5, stating that, the present and future public convenience and necessity permit the abandonment of operations on a line of railroad known as the Ishpeming-Martins Landing line extending from railroad milepost 74.4 (Lake Superior and Ishpeming Railroad Company milepost) near Ishpeming, to railroad milepost 190.3 (C&NW milepost) near Clowry, a distance of 8.8 miles, the first 4.4 miles of which are owned exclusively by the Lake Superior and Ishpeming Railroad Company, while the C&NW owns an undivided one-half interest in the second 4.4 miles with the Lake Superior; and also an abandonment of a portion of the same line of railroad extending from railroad milepost 190.3 near Clowry to railroad milepost 196.6 at Martins Landing, to the end of the line, a distance of 6.3 miles, all of the above being in Marquette County, MI, subject to the conditions for the protection of railway employees prescribed by the Commission in *Oregon Short Line R. Co—Abandonment Goshen,* 360 I.C.C. 91 (1979), and further that C&NW shall keep intact all of the right-of-way underlying the track, including all the bridges and culverts for a period of 120 days from the decided date of the certificate and decision to permit any state or local government agency or other interested party to negotiate the acquisition for public use of all or any portion of the right-of-way. A certificate of public convenience and necessity permitting abandonment was issued to the Chicago and North Western Transportation Company. Since no investigation was instituted, the requirement of § 1121.38(a) of the Regulations that publication of notice of abandonment decisions in the **Federal Register** be made only after such a decision becomes administratively final was waived.

Upon receipt by the carrier of an actual offer of financial assistance, the carrier shall make available to the offeror the records, accounts, appraisals, working papers, and other documents used in preparing Exhibit I (Section 1121.45 of the Regulations). Such documents shall be made available during regular business hours at a time and place mutually agreeable to the parties.

The offer must be filed and served no later than October 9, 1980. The offer, as filed, shall contain information required pursuant to § 1121.38(b) (2) and (3) of the Regulations. If no such offer is received, the certificate of public convenience and necessity authorizing abandonment shall become effective November 10, 1980.

Agatha L. Mergenovich,

Secretary.

[FR Doc. 80-29491 Filed 9-23-80; 8:45 am]

BILLING CODE 7035-01-M

INTERNATIONAL TRADE COMMISSION

[Investigation No. 731-TA-25 (Final)]

Anhydrous Sodium Metasilicate From France

AGENCY: United States International Trade Commission.

ACTION: Institution of a final antidumping duty investigation.

SUMMARY: As a result of the affirmative preliminary determination on August 29, 1980, by the United States Department of Commerce that there is a reasonable basis to believe or suspect that anhydrous sodium metasilicate from France is being, or is likely to be, sold in the United States at less than fair value within the meaning of section 733 of the Tariff Act of 1930 (19 U.S.C. 1673b), the United States International Trade Commission (hereinafter "the Commission") hereby gives notice of the institution of investigation No. 731-TA-25 (Final) to determine whether an industry in the United States is materially injured, or is threatened with material injury, or the establishment of an industry in the United States is materially retarded, by reason of imports of such merchandise. For purposes of this investigation, the term "anhydrous sodium metasilicate" means anhydrous sodium metasilicate, provided for in item 421.34 of the Tariff Schedules of the United States. This investigation will be conducted according to the provisions of Part 207 of the Commission's *Rules of Practice and Procedure* (19 CFR 207, 44 FR 76457), Subpart C, effective January 1, 1980.

EFFECTIVE DATE: September 16, 1980.

FOR FURTHER INFORMATION CONTACT. Mr. Bill Schechter, Staff Investigator, Office of Investigations, U.S. International Trade Commission, Room 348, 701 E Street, NW., Washington, D.C. 20436; telephone, (202) 523-0300.

SUPPLEMENTARY INFORMATION: On June 30, 1980, the Commission unanimously determined, on the basis of the information developed during the course of investigation No. 731-TA-25 (Preliminary), that there is a reasonable indication that an industry in the United States is materially injured by reason of the importation of anhydrous sodium metasilicate from France, provided for in item 421.34 of the Tariff Schedules of the United States, which are allegedly sold at less than fair value. As a result of the Commission's determination, the Department of Commerce (the administrating authority) continued its investigation into the question of less-than-fair-value sales. The final determination by the Department of Commerce of whether anhydrous sodium metasilicate from France is being, or is likely to be, sold in the United States at less than fair value will be made within 75 days after the date of its preliminary determination, or in this case, by November 12, 1980.

Written Submissions

Any person may submit to the Commission a written statement of information pertinent to the subject of this investigation. A signed original and nineteen (19) true copies of each submission must be filed at the Office of the Secretary, U.S. International Trade Commission Building, 701 E Street, NW., Washington, D.C. 20436, on or before December 10, 1980. All written submissions, except for confidential business data, will be available for public inspection.

Any submission of business information for which confidential treatment is desired shall be submitted separately from other documents. The envelope and all pages of such submissions must be clearly labeled "Confidential Business Information." Confidential submissions and requests

for confidential treatement must conform with the requirements of section 201.6 of the Commission's *Rules of Practice and Procedure* (19 CFR 201.6).

A staff report containing preliminary findings of fact will be available to all interested parties on November 13, 1980.

Public Hearings

The Commission will hold a public hearing in connection with this investigation on December 3, 1980, in the Hearing Room of the U.S. International Trade Commission Building, 701 E Street, NW., Washington, D.C. 20436, beginning at 10:00 a.m., e.s.t. Requests to appear at the hearing should be filed in writing with the Secretary to the Commission not later than the close of business (5:15 p.m., e.s.t.), November 25, 1980. All persons desiring to appear at the hearing and make oral presentations must file prehearing statements and should attend a prehearing conference to be held at 2:00 p.m., e.s.t., on November 25, 1980, in Room 117 at the U.S. International Trade Commission Building. Prehearing statements must be filed on or before November 28, 1980. For further information concerning the conduct of the investigation, hearing procedures, and rules and general applications, consult the Commission's *Rules of Practice and Procedure*, Part 207, Subpart C (19 CFR 207), and Part 201, Subparts A through E (19 CFR 201).

The Commission has waived Commission rule 201.12(d) as amended, "Submission of prepared statements" in connection with this investigation. This rule stated that "Copies of witnesses" prepared statements should be filed with the Office of the Secretary of the Commission not later than 3 business days prior to the hearing and submission of such statements shall comply with sections 201.6 and 201.8 of this subpart." It is nevertheless the Commission's request that parties submit copies of witnesses' prepared testimony as early as practicable before the hearing in order to permit Commission review.

This notice is published pursuant to section 207.20 of the Commission's *Rules of Practice and Procedure* (19 CFR 207.20, 44 FR 76458).

By order of the Commission.

Issued: September 17, 1980.

Kenneth R. Mason,

Secretary.

[FR Doc. 80-29623 Filed 9-23-80; 8:45 am]

BILLING CODE 7020-02-M

[731-TA-31, -32, and -33 (Preliminary)]

Barium Carbonate and Strontium Carbonate From the Federal Republic of Germany and Strontium Nitrate From Italy; Institution of Preliminary Antidumping Investigations and Scheduling of Conference

AGENCY: United States International Trade Commission.

ACTION: Institution of preliminary antidumping investigations to determine whether there is a reasonable indication that an industry in the United States is materially injured or is threatened with material injury, or the establishment of an industry is materially retarded, by reason of imports from the Federal Republic of Germany of precipitated barium carbonate and precipitated strontium carbonate, provided for in items 472.06 and 421.72, respectively, of the Tariff Schedules of the United States (TSUS), and imports from Italy of strontium nitrate, provided for in TSUS item 421.74, which are allegedly being sold or likely to be sold at less than fair value.

EFFECTIVE DATE: September 9, 1980.

FOR FURTHER INFORMATION CONTACT: Miriam A. Bishop, Investigator (202-523-0291).

SUPPLEMENTARY INFORMATION:

Background

These investigations are being instituted following receipt on September 9, 1980, of petitions filed by Leva, Hawes, Symington, Martin & Oppenheimer, Washington, D.C., on behalf of domestic producers of barium carbonate, strontium carbonate, and strontium nitrate.

Authority

Section 733(a) of the Tariff Act of 1930 (19 U.S.C. 1673b(a)) requires the Commission to make a determination of whether there is a reasonable indication that an industry in the United States is materially injured, or is threatened with material injury, or the establishment of an industry in the United States is materially retarded, by reason of imports alleged to be, or likely to be, sold in the United States at less than fair value. Such a determination must be made within 45 days after the date on which a petition is filed under section 732(b) or on which notice is received from the Department of Commerce of an investigation commenced under section 732(a). Accordingly, the Commission, effective September 9, 1980, instituted preliminary antidumping investigations Nos. 731-TA-31, -32, and -33. These investigations will be subject to the provisions of part 207 of the Commission's Rules of Practice and Procedure (19 CFR 207, 44 FR 76457) and particularly, subpart B thereof.

Written Submissions

Any person may submit to the Commission on or before October 8, 1980, a written statement of information pertinent to the subject matter of these investigations. A signed original and nineteen copies of such statements must be submitted.

Any business information which a submitter desires the Commission to treat as confidential shall be submitted separately and each sheet must be clearly marked at the top "Confidential Business Data." Confidential submissions must conform with the requirements of section 201.6 of the Commission's rules of Practice and Procedure (19 CFR 201.6). All written submissions, except for confidential business data, will be available for public inspection.

Conference

The Director of Operations of the Commission has scheduled a conference in connection with these investigations for 10 a.m., e.d.t., on October 3, 1980, at the U.S. International Trade Commission Building, 701 E Street, NW., Washington, D.C. Parties wishing to participate in the conference should contact the investigator for the investigation, Ms. Miriam A. Bishop (202-523-0291). It is anticipated that parties in support of the petitions for antidumping duties and parties opposed to such petitions will each be collectively allocated one hour within which to make an oral presentation at the conference. Further details concerning the conduct of the conference will be provided by the investigator.

Inspection of Petition

The petitions filed in these cases are available for public inspection at the Office of the Secretary, U.S. International Trade Commission and at the New York City office of the U.S. International Trade Commission located at 6 World Trade Center.

Issued: September 12, 1980.

By order of the Commission.

Kenneth R. Mason,

Secretary.

[FR Doc. 80-29621 Filed 9-23-80; 8:45 am]

BILLING CODE 7020-02-M

[603-TA-5]

Calcium Pantothenate From Japan; Termination of Preliminary Investigation

AGENCY: United States International Trade Commission.

ACTION: Upon consideration of the final staff report on Calcium Pantothenate from Japan Inv. No. 603-TA-5, the Commission has decided to terminate the investigation conducted pursuant to 19 U.S.C. 2482.

EFFECTIVE DATE: September 17, 1980.

BACKGROUND: On February 20, 1980, the Commission issued a notice of preliminary investigation under section 603 of the Trade Act of 1974 (19 U.S.C. 2482) to determine whether imports of calcium pantothenate from Japan are the subject of a combination, contract or conspiracy to restrain trade and commerce in the United States, or the subject of a scheme to monopolize the d-calcium pantothenate and/or dl-calcium pantothenate markets in the United States. The preliminary investigation undertaken by the staff revealed no unfair methods of competition and unfair acts in the importation and sale of cal pan by Mitsui and Company, Alps Pharmaceutical, or other companies, the effect or tendency of which is to destroy or substantially injure an industry efficiently and economically operated in the United States, or to prevent the establishment of such an industry, or to restrain or monopolize trade and commerce in the United States. The Commission therefore determined that there was no basis for further investigatory activity and terminated the preliminary investigation.

FOR FURTHER INFORMATION CONTACT: Christine Bliss, Attorney Advisor, Office of the General Counsel (202-523-9375).

Issued: September 19, 1980.

By order of the Commission.

Kenneth R. Mason,

Secretary.

[FR Doc. 80-29620 Filed 9-23-80; 8:45 am]

BILLING CODE 7020-02-M

[Investigation No. 337-TA-67]

Certain Inclined-Field Acceleration Tubes and Components Thereof; Commission Hearing on the Presiding Officer's Recommendation and on Relief, Bonding, and the Public Interest, and the Schedule for Filing Written Submissions.

AGENCY: U.S. International Trade Commission.

ACTION: The Scheduling of Oral Argument and Briefing for Investigation No. 337-TA-67, Certain Inclined-Field Acceleration Tubes and Components Thereof.

Notice is hereby given that the presiding officer has filed her recommended determination that there is a violation of section 337 of the Tariff Act of 1930, in the unauthorized importation into and subsequent sale in the United States of the accused inclined-field acceleration tubes. She has also certified the evidentiary record to the Commission for its consideration. Interested persons may obtain copies of the nonconfidential version of the presiding officer's recommendation (and all other public documents) by contacting the Office of the Secretary to the Commission, 701 E Street NW., Washington, D.C. 20436.

Commission Hearing

The Commission will hold a hearing beginning at 10:00 a.m., e.s.t., on October 30, 1980, in the Commission's Hearing Room, 701 E Street NW., Washington, D.C. 20436, for two purposes. First, the Commission will hear oral argument on the presiding officer's recommendation that a violation of section 337 of the Tariff Act of 1930, exists. Second, the Commission will hear presentations concerning appropriate relief, the way such relief would affect the public interest, and the proper amount of the bond during the Presidential review period, in the event that the Commission determines that there is a violation of section 337. These matters will be heard on the same day in order to facilitate the completion of this investigation within time limits established under law and to minimize the burden of this hearing upon the parties. The procedures for each portion of the hearing follow.

Oral Argument

A party to the Commission's investigation or an interested agency wishing to present to the Commission an oral argument concerning the presiding officer's recommendation will be limited to no more than 30 minutes. A party or interested agency may reserve 10 minutes of its time for rebuttal. The oral arguments will be held in this order: complainant, respondents, interested agencies, and the Commission investigative attorney. Any rebuttals will be held in this order: respondents, complainant, interested agencies, and the Commission investigative attorney.

Following the oral arguments on the presiding officer's recommendation, a party to the investigation, an interested agency, a public-interest group, or any interested member of the public may make an oral presentation on relief, bonding, and the public interest.

Relief

If the Commission finds that a violation of section 337 has occurred, it may issue (1) an order which could result in the exclusion from entry of certain inclined field acceleration tubes and components thereof or (2) an order which could result in requiring the respondent to cease and desist from alleged unfair methods of competition or unfair acts in the importation and sale of certain inclined-field acceleration tubes and components thereof. Accordingly, the Commission is interested in what relief, if any, should be ordered.

Bonding

If the Commission finds that a violation of section 337 has occurred and orders some form of relief, the President has up to 60 days to approve or disapprove the Commission's action. During this period the subject articles would be entitled to enter the United States under a bond determined by the Commission and prescribed by the Secretary of the Treasury. Accordingly, the Commission is interested in what bond, if any, should be assessed.

Public Interest

If the Commission concludes that a violation of section 337 has occurred and orders some form of relief, it must consider the effect of that relief upon the public. Accordingly, the Commission is interested in the effect of any exclusion or cease and desist order upon (1) the public health and welfare, (2) competitive conditions in the U.S. economy, (3) the production of like or directly competitive articles in the United States, and (4) U.S. consumers.

Written Submissions

Parties to the Commission's investigation, interested agencies, and the Commission investigative staff are encouraged to file briefs on the issues of violation (to the extent they have not already briefed that issue in connection with their exceptions to the presiding officer's recommended determination), remedy, bonding, and the public interest in order to give greater focus to the hearing. Such briefs must be filed no later than the close of business on October 16, 1980. The parties may be asked during the course of the hearing to file posthearing briefs if necessary.

Notice of Appearance

Written requests to appear at the Commission hearing must be filed by October 16, 1980.

Additional Information

The original and 19 true copies of all briefs and written comments and any

written request to participate must be filed with the Secretary to the Commission. Any person desiring to discuss confidential information, or to submit a document (or a portion thereof) to the Commission in confidence, must request *in camera* treatment unless the information has already been granted *in camera* treatment by the presiding officer. Such request should be directed to the Chairman of the Commission and must include a full statement of the reasons why the Commission should grant such treatment. Documents or arguments reflecting confidential information approved by the Commission for *in camera* treatment will be treated accordingly. All nonconfidential written submissions will be available for public inspection at the Secretary's Office. Notice of the Commission's investigation was published in the **Federal Register** of June 27, 1979 (44 FR 37567).

Issued: September 17, 1980

By order of the Commission.

Kenneth R. Mason,

Secretary.

[FR Doc. 80-29624 Filed 9-23-80; 8:45 am]

BILLING CODE 7020-02-M

[731-TA-30 (Preliminary)]

Montan Wax From East Germany; Institution of Preliminary Antidumping Investigation and Scheduling of Conference

AGENCY: United States International Trade Commission.

ACTION: Institution of preliminary antidumping investigation to determine whether there is a reasonable indication that an industry in the United States is materially injured, or is threatened with material injury, or the establishment of an industry in the United States is materially retarded, by reason of imports of montan wax from East Germany, provided for in item 494.20 of the Tariff Schedules of the United States (TSUS), which is alleged to be, or likely to be, sold in the United States at less than its fair value.

EFFECTIVE DATE: September 8, 1980.

FOR FURTHER INFORMATION CONTACT: Lynn Featherstone, Supervisory Investigator, (202-523-1376).

SUPPLEMENTARY INFORMATION:

Background. This investigation is being instituted following receipt of a petition on September 8, 1980, filed by American Lignite Products Co., Ione, Calif., the sole U.S. producer of montan wax. The petition requested the imposition of additional duties in an amount equal to the amount by which the foreign market value exceeds the United States price of montan wax imported from East Germany.

Authority. Section 733(a) of the Tariff Act of 1930 (19 U.S.C. 1673b(a)) requires the Commission to make a determination of whether there is a reasonable indication that an industry in the United States is materially injured, or is threatened with material injury, or the establishment of an industry in the United States is materially retarded, by reason of imports alleged to be, or likely to be, sold in the United States at less that fair value. Such a determination must be made within 45 days after the date on which a petition is filed under section 732(b) or on which notice is received from the Department of Commerce of an investigation commenced under section 732(a). Accordingly, the Commission, effective September 8, 1980, instituted preliminary antidumping investigation No. 731-TA-30 (Preliminary). This investigation will be subject to the provisions of part 207 of the Commission's *Rules of Practice and Procedure* (19 CFR 207, 44 FR 76457) and, particularly, subpart B thereof, effective January 1, 1980.

Written submissions. Any person may submit to the Commission on or before October 6, 1980, a written statement of information pertinent to the subject matter of this investigation. A signed original and nineteen copies of such statements must be submitted.

Any business information which a submitter desires the Commission to treat as confidential shall be submitted separately and each sheet must be clearly marked at the top "Confidential Business Data." Confidential submissions must conform with the requirements of section 201.6 of the Commission's *Rules of Practice and Procedure* (19 CFR 201.6). All written submissions, except for confidential business data, will be available for public inspection.

Conference. The Director of Operations of the Commission has scheduled a conference in connection with this investigation for 10 a.m., e.d.t., on October 1, 1980, at the U.S. International Trade Commission Building, 701 E Street, NW., Washington, D.C. Parties wishing to participate in the conference should contact the supervisory investigator for the investigation, Mr. Lynn Featherstone (202-523-1376). It is anticipated that parties in support of the petition for antidumping duties and parties opposed to such petition will each be collectively allocated one hour within which to make an oral presentation at the conference. Further details concerning the conduct of the conference will be provided by the supervisory investigator.

Inspection of petition. The petition filed in this case is available for public inspection at the Office of the Secretary, U.S. International Trade Commission, and at the Commission's New York City Office, located at 6 World Trade Center.

Issued: September 17, 1980.

By order of the Commission:

Kenneth R. Mason,

Secretary.

[FR Doc. 80-29622 Filed 9-23-80; 8:45 am]

BILLING CODE 7020-02-M

[731-TA-34 (Preliminary)]

Portable Electric Nibblers From Switzerland; Institution of Preliminary Antidumping Investigation and Scheduling of Conference

AGENCY: United States International Trade Commission.

ACTION: Institution of preliminary antidumping investigation to determine whether there is a reasonable indication that an industry in the United States is materially injured, or is threatened with material injury, or the establishment of an industry is materially retarded, by reason of imports from Switzerland of hand-directed or -controlled nibblers with self-contained electric motors, provided for in item 683.20 of the Tariff Schedules of the United States (TSUS), sold or likely to be sold at less than fair value.

EFFECTIVE DATE: September 18, 1980.

FOR FURTHER INFORMATION CONTACT: Daniel Leahy, Senior Investigator (202-523-1369).

SUPPLEMENTARY INFORMATION:

Background. This investigation is being instituted following receipt of a petition on September 10, 1980, filed by the Widder Corp., Naugatuck, Conn., on behalf of the domestic industry producing portable electric nibblers. The petition alleged sales at less than fair value (LTFV) of portable electric nibblers produced in Switzerland.

Authority. Section 733(a) of the Tariff Act of 1930 (19 U.S.C. 1673b(a)) requires the Commission to make a determination of whether there is a reasonable indication that an industry in the United States is materially injured, or is threatened with material injury, or the establishment of an industry in the United States is materially retarded, by reason of imports alleged to be, or likely to be, sold in the United States at less than fair value. Such a determination must be made within 45 days after the date on which a petition is filed under section 732(b) or on which notice is

received from the Department of Commerce of an investigation commenced under 732(a). Accordingly, the Commission, on September 18, 1980, instituted preliminary antidumping investigation No. 731–TA–34. This investigation will be subject to the provisions of part 207 of the Commission's Rules of Practice and Procedure (19 CFR 207, 44 FR 76457) and particularly, subpart B thereof.

Written submissions. Any person may submit to the Commission on or before October 15, 1980, a written statement of information pertinent to the subject matter of this investigation. A signed original and nineteen copies of such statements must be submitted.

Any business information which a submitter desires the Commission to treat as confidential shall be submitted separately and each sheet must be clearly marked at the top "Confidential Business Data." Confidential submissions must conform with the requirements of section 201.6 of the Commission's Rules of Practice and Procedure (19 CFR 201.6). All written submissions, except for confidential business data, will be available for public inspection.

Conference. The Director of Operations of the Commission has scheduled a conference in connection with this investigation for 10 a.m., e.d.t., on October 10, 1980, at the U.S. International Trade Commission Building, 701 E Street, NW., Washington, D.C. Parties wishing to participate in the conference should contact the senior investigator for the investigation, Mr. Daniel Leahy (202–523–1369). It is anticipated that parties in support of the petition for antidumping duties and parties opposed to such petition will each be collectively allocated one hour within which to make an oral presentation at the conference. Further details concerning the conduct of the conference will be provided by the senior investigator.

Inspection of petition. The petition filed in this case is available for public inspection at the Office of the Secretary, U.S. International Trade Commission and at the New York City office of the U.S. International Trade Commission located at 6 World Trade Center.

Issued: September 19, 1980.

Kenneth R. Mason,

Secretary.

[FR Doc. 80–29619 Filed 9–23–80; 8:45 am]

BILLING CODE 7020–02–M

DEPARTMENT OF JUSTICE

Antitrust Division

United States v. United Technologies Corp., Proposed Consent Judgment and Competitive Impact Statement

Pursuant to the Antitrust Procedures and Penalties Act, 15 U.S.C. 16 (b) through (h), a proposed consent judgment and a competitive impact statement (CIS) as set out below have been filed with the U.S. District Court for the Northern District of New York in *United States* v. *United Technologies Corporation,* 78 CV 580 filed November 13, 1978. The complaint in this case alleged in Count One that the proposed acquisition by United of approximately one-half of the common stock of Carrier Corporation would violate Section 7 of the Clayton Act by substantially lessening competition in the manufacture and sale of unitary and applied heating and air conditioning systems because Carrier would be entrenched as a leader in those markets as a result of its access to United's broad based technological resources. In Count Two it is alleged that the acquisition may result in a lessening of competition due to the reciprocity effects flowing from the structure created by United, a leading manufacturer of magnet wire an essential component in the manufacture of electric motors, combining with Carrier, a purchaser of electric motors.

The proposed decree provides relief in three areas: (a) it requires United, for a reasonable fee, to grant a license to anyone who makes an application for it, for any patent, related know-how necessary to practice the patent and unpatented trade secret which United now owns or which it acquires in the seven-year period following the entry of the proposed judgment and which—in the case of patented technology—has been licensed to or used by Carrier and—in the case of related know-how and trade secrets—has been used by Carrier to make heating and air conditioning equipment and components, provided, however, that the licensee agrees to use the patent, related know-how or trade secret solely for the manufacture of heating and air conditioning equipment or components made for use on his equipment; (b) it restricts United from acquiring any other domestic manufacturer of heating and air conditioning equipment for a period of ten years without the prior consent of the Department of Justice or the approval of the court; and (c) it imposes certain duties and restrictions on United designed to prevent reciprocity effects and reciprocal dealing.

The CIS describes the terms of the judgment and the background of the action.

Public comment is invited within the statutory sixty (60) day waiting period. These comments and the Department of Justice's responses thereto will be published in the **Federal Register** and filed with the Court. Comments should be directed to Ralph T. Giordano, Chief, New York Office, Antitrust Division, Department of Justice, Room 3630, New York, New York 10278.

Joseph H. Widmar,

Director of Operations, Antitrust Division.

U.S. District Court, Northern District of New York

United States of America, Plaintiff, v. *United Technologies Corporation,* Defendant.
78 CIV. 580
Filed: September 11, 1980.

Stipulation

It is stipulated by and between the undersigned parties, by their respective attorneys, that:

1. A Final Judgment in the form hereto attached may be filed and entered by the Court, upon the motion of any party or upon the Court's own motion, at any time after compliance with the requirements of the Antitrust Procedures and Penalties Act, 15 U.S.C. § 16, and without further notice to any party or other proceedings, provided that plaintiff has not withdrawn its consent, which it may do at any time before entry of the proposed Final Judgment by serving notice thereof on defendant and by filing that notice with the Court.

2. In the event plaintiff withdraws its consent or if the proposed Final Judgment is not entered pursuant to this stipulation, this stipulation shall be of no effect whatever and the making of this stipulation shall be without prejudice to plaintiff and defendant in this and any other proceedings.

For the plaintiff: Sanford M. Litvack, *Assistant Attorney General.* Mark P. Leddy, Ralph T. Giordano, *Attorneys, Department of Justice.* Philip F. Cody, Edward Friedman, Jacqueline W. Distelman, Charles V. Reilly, Jorge Guttlein, *Attorneys, Department of Justice.*

For the defendant: Wachtell, Lipton, Rosen & Katz, *Attorneys for United Technologies Corporation.*

U.S. District Court, Northern District of New York

United States of America, Plaintiff, v. *United Technologies Corporation,* Defendant.
78 CV 580.
Filed September 11, 1980.

Final Judgment

Plaintiff, United States of America, having filed its Complaint on November 13, 1978, and plaintiff and defendant by their respective attorneys having consented to the entry of this Final Judgment, without trial or

adjudication of any issue of fact or law and without this Final Judgment constituting evidence or admission by any party with respect to any issue of fact or law:

Now, therefore, before the taking of any testimony and without trial or adjudication of any issue of fact or law, and upon the consent of the parties, it is hereby

Ordered, adjudged and decreed as follows:

I

This Court has jurisdiction of the subject matter herein and of the parties consenting hereto. The Complaint states claims upon which relief may be granted against defendant under Section 7 of the Clayton Act, as amended (15 U.S.C. § 18).

II

As used in this Final Judgment:

(A) "Defendant" shall mean United Technologies Corporation and each of its domestic subsidiaries, and any successors or assigns thereof, but shall not include Carrier for the purposes of Sections IV and V of this Final Judgment.

(B) "Foreign subsidiary or affiliate of defendant" shall not include any foreign subsidiary or affiliate of Carrier.

(C) "Carrier" shall mean Carrier Corporation and each of its domestic subsidiaries, and any successors or assigns thereof.

(D) "HVAC Equipment" shall mean heating, ventilating and air-conditioning systems utilized for temperature control and humidification, air cleaning and/or air circulation within a building or any space located in a building.

(E) "HVAC Components" shall mean controls or other components or parts for HVAC Equipment, and, when used in reference to a licensee or applicant for a license, shall mean controls or other components or parts for HVAC Equipment which Equipment is manufactured by such licensee or applicant for a license.

(F) "HVAC Trade Secret" shall mean any written information that discloses any unpatented invention, process, formula, method or computer software which is treated as secret by defendant, or any foreign subsidiary or affiliate of defendant, is unobvious to a person reasonably skilled in the art, and is novel in that it has no commercial equivalent that is used by, or is commercially available to, any of Carrier's competitors for use in the manufacture of HVAC Equipment in the United States.

(G) "Person" shall mean any individual, partnership, firm, corporation, association, or any other business or legal entity.

III

The provisions of this Final Judgment shall apply to defendant and its officers, directors, agents, employees, successors and assigns, and to all other persons in active concert or participation with any of them who shall have received actual notice of this Final Judgment by personal service or otherwise. This Final Judgment shall not apply to acts or transactions outside of the United States which do not substantially affect the interstate or foreign commerce of the United States.

(A) Defendant is ordered and directed to grant to any person who makes a written application therefor within a period of ten (10) years from the date of entry of this Final Judgment, a nonexclusive license to make, use and vend HVAC Equipment or HVAC Components in the United States under any United States letters patent which defendant, or any foreign subsidiary or affiliate of defendant, owns or may acquire within a period of seven (7) years from the date of entry of this Final Judgment, such license to be for the full unexpired term of each licensed patent; provided that such patent has been licensed to or used by Carrier to make HVAC Equipment or HVAC Components in the United States; provided further, that there shall be no obligation on defendant pursuant to this Section to grant a license under any patent solely because of the sale by defendant, or any foreign subsidiary or affiliate of defendant, to Carrier of a component or part for HVAC Equipment which defendant, or any foreign subsidiary or affiliate of defendant, makes available for purchase by other domestic manufacturers of HVAC Equipment on a nondiscriminatory basis as between Carrier and other domestic manufacturers of HVAC Equipment.

(B) Nothing herein shall prevent any applicant or licensee from attacking at any time the validity or scope of any patent nor shall this Final Judgment be construed as imputing any validity to any patent.

(C) Defendant is further ordered and directed to grant to any person who has been granted a patent license pursuant to Paragraph (A) of this Section, and who makes written application therefor within a period of ten (10) years from the date of entry of this Final Judgment, a non-exclusive license to use for the purpose of making, using and vending HVAC Equipment or HVAC Components in the United States, any written technical information which defendant, or any foreign subsidiary or affiliate of defendant, owns or may acquire within a period of seven (7) years from the date of entry of this Final Judgment and which is necessary to enable a person reasonably skilled in the art to practice any invention claimed in the licensed patents to make HVAC Equipment or HVAC Components, such license to be terminable by the licensee if the technical information lawfully becomes within the public domain; provided that such written technical information has been used by Carrier to make HVAC Equipment or HVAC Components in the United States. Defendant shall have no obligation under this Section to furnish technical information to any person unless and until such person shall have finally accepted a license under the patent to which the technical information pertains, and shall have agreed to pay reasonable royalties, fees or other consideration for the right to receive and use said technical information. In furnishing any such technical information, defendant shall have the right to require the person receiving the information to execute an appropriate agreement forbidding its unauthorized use or its disclosure to third parties, and shall have the right to apply restrictive legends to such information indicating its proprietary nature and to require the return of all copies of such information upon the termination of the right to use it. Nothing in this Section shall be deemed to require defendant to license technical information to any person unless such person intends to use such technical information in practicing the patent to which the technical information relates, or to prevent defendant from requiring a licensee to agree not to use such technical information other than in practicing the inventions claimed in the licensed patent to which the technical information pertains, in making HVAC Equipment or HVAC Components in the United States. Defendant shall have no right to restrict the licensee's right to terminate the license if the technical information lawfully becomes within the public domain.

(D) Defendant is further ordered and directed to grant to any person who makes a written application therefor within a period of ten (10) years from the date of entry of this Final Judgment, a non-exclusive license to use for the purpose of making, using and vending HVAC Equipment or HVAC Components in the United States any HVAC Trade Secret which defendant, or any foreign subsidiary or affiliate of defendant, owns or may acquire within seven (7) years from the date of entry of this Final Judgment, such license to be terminable by the licensee if the HVAC Trade Secret lawfully becomes within the public domain; provided that such HVAC Trade Secret has been used by Carrier to make HVAC Equipment or HVAC Components in the United States; provided further, that there shall be no obligation on defendant pursuant to this Section to grant a license solely because of the sale by defendant, or any foreign subsidiary or affiliate of defendant, to Carrier of an HVAC Component which defendant, or any foreign subsidiary or affiliate of defendant, makes available for purchase by other domestic manufacturers of HVAC Equipment on a nondiscriminatory basis as between Carrier and other domestic manufacturers of HVAC Equipment.

(E) Defendant shall have no obligation under this Section to furnish any HVAC Trade Secret to any person unless and until such person shall have accepted a license therefor, and shall have agreed to pay reasonable royalties, fees or other consideration for the right to receive and use said HVAC Trade Secret. In furnishing any such HVAC Trade Secret, defendant shall have the right to require the person receiving the secret to execute an appropriate agreement forbidding its unauthorized use or its disclosure to third parties. Defendant shall also have the right to apply restrictive legends to such secret indicating its proprietary and secret nature and to require the return of all copies of such HVAC Trade Secret upon the termination of the right to use it. Nothing in this Section shall be deemed to require defendent to license any HVAC Trade Secret to any person unless such person intends to use such HVAC Trade Secret in making HVAC Equipment or HVAC Components in the United States or to prevent defendant from requiring a licensee to agree not to use such HVAC Trade Secret other than in making, using and vending HVAC Equipment or HVAC Components in the United States. Defendant shall have no right to restrict the licensee's right to

terminate the license if the HVAC Trade Secret lawfully becomes within the public domain.

(F) Defendant is enjoined and restrained from including any restrictions whatsoever in any license granted or other agreement made pursuant to the provisions of this Section except as hereinafter provided:

(i) Reasonable royalties, fees or other consideration may be charged;

(ii) Reasonable provisions may be made for periodic reports of royalties, fees or other consideration charged, and for periodic inspection of the books and records of the licensee by an independent auditor or other person acceptable to both parties who shall report to defendant only the amount of the royalty, fee or other consideration due and payable;

(iii) Reasonable provisions may be made as provided in Paragraphs (C), (D) and (E) of this Section, and to assure that any license granted pursuant to this Section shall not be used for purposes other than the manufacture of HVAC Equipment or HVAC Components in the United States; and

(iv) Reasonable provisions may be made for cancellation of the license or other agreement upon breach by the licensee of any of the provisions included in the license.

(G) Within fifteen (15) days of the entry of this Final Judgment, defendant shall file with this Court on the public record and submit in writing to those persons set forth by plaintiff on Appendix A hereto as well as to any persons known by defendant to be engaged in the manufacture of HVAC Equipment in the United States, a listing of all patents and HVAC Trade Secrets defendant identifies as having been licensed to or used by Carrier as described and set forth in Paragraphs (A) and (D) of this Section. (Defendant shall also submit in writing this listing to any persons who may be added to Appendix A by plaintiff, from time to time, on the basis that such persons are engaged in the manufacture of HVAC Equipment in the United States, within fifteen (15) days of such addition.) Such listing shall be accompanied by a statement indicating in respect of each such patent whether technical information is available for licensing as provided in Paragraph (C) of this Section. Such listing shall also be accompanied by a statement that, pursuant to this Final Judgment, defendant must file regular reports with this Court identifying the patents (hereinafter referred to in this Paragraph (G) as "HVAC Patents") and HVAC Trade Secrets which thereafter become available for licensing pursuant to Paragraphs (A) and (D) of this Section, and that copies of these reports will be sent (contemporaneously with their filing with this Court) to any person described in this Paragraph (G) who at any time makes a written request to defendant for them. Upon receipt of such a written request, defendant shall send such person a copy of each report which it is required to file pursuant to this Section. Such reports shall be sent at the same time that they are filed with the Court. Thereafter, upon, or as promptly as reasonably practicable after, a determination by defendant to license to Carrier or permit Carrier to use any HVAC Patent or HVAC Trade Secret, but in no event later than forty-five (45) days after the use by Carrier of any HVAC Patent or HVAC Trade Secret, or later than fifteen (15) days after the grant by defendant of a written license to Carrier of any HVAC Patent or HVAC Trade Secret, or of the written determination by defendant to permit Carrier to use any HVAC Patent or any HVAC Trade Secret, defendant shall file with this Court on the public record and submit in writing to all those persons described in this Paragraph (G) who have requested such information in writing, a listing of such HVAC Patents or HVAC Trade Secrets, together with a statement as to the avilability of technical information related to each such HVAC Patent as provided in Paragraph (C) of this Section.

(H) Any license or other agreement made pursuant to this Section shall, at the election of the licensee or person seeking information, provide that the latter may cancel the license or agreement at any time after one (1) year from the initial date thereof by giving thirty (30) days notice in writing to defendant. The inclusion of such a provision shall be a factor to be considered in determining the reasonableness of the royalties, fees or other consideration sought by defendant.

(I) Beginning ninety (90) days after the entry of this Final Judgment and continuing annually thereafter, for ten (10) years, defendant shall submit to the Assistant Attorney General in charge of the Antitrust Division written reports setting forth the patents and related technical informatin and HVAC Trade Secrets which are available for license pursuant to Paragraphs (A), (C) and (D) of this Section, the fact and manner of compliance with Paragraph (G) of this Section, a listing of applications received hereunder, and any licenses, contracts or other agreements concluded between defendant and any other person for licensing pursuant to this Final Judgment.

V

Defendant is ordered and directed, within twenty (20) days after receipt of any written application for a license pursuant to Section IV(A), (C) or (D) hereof, to advise the applicant of the royalties, fees or other consideration it deems reasonable therefor. If defendant and the applicant are unable to agree upon what constitutes reasonable royalties, fees or other consideration, or upon the other terms and conditions of a license, defendant may apply to the Court for a determination thereof and, in any event, shall make an application forthwith upon request of the applicant. Defendant shall give written notice of such application to the applicant and to the Assistant Attorney General in charge of the Antitrust Division. In any such proceeding, the burden of proof shall be upon defendant to establish the reasonableness of the royalties, fees or other consideration and of the other terms and conditions requested by it. Pending the completion of any such court proceeding, defendant need not provide technical information pursuant to Section IV(C), or HVAC Trade Secrets pursuant to Section IV(D); however, the applicant shall have the right to make, use and vend HVAC Equipment or HVAC Components in the United States under the patent or patents to which its application pertains, without the payment of any royalty or other fee, but subject to the following provisions: defendant may, with written notice to the Assistant Attorney General in charge of the Antitrust Division, apply to the Court to fix interim royalties or fees pending final determination of what constitutes reasonable royalties or fees. If the Court fixes such interim royalties or fees, a license or other agreement shall then issue providing for the periodic payment of royalties or fees at such interim rate from the date of the making of such application to the Court; and whether or not such interim rate is fixed, any final order may provide for such adjustments, including retroactive royalties or fees, as the Court may order after final determination of reasonable royalties or fees, and such royalties or fees shall apply to the applicant. Upon motion of either party, the Court may award costs and reasonable attorneys fees upon a finding that a party has not acted reasonably in attempting to reach agreement on royalties, fees, or other terms and conditions prior to the bringing of the matter to the Court.

VI

Within fiften (15) days of the entry of this Final Judgment defendant shall send a copy of this Final Judgment to those persons set forth on Appendix A hereto as well as any othe persons known by defendant to be engaged in the manufacture of HVAC equipment in the United States.

VII

(A) For a period of ten (10) years from the date of the entry of this Final Judgment, defendant is enjoined and restrained from engaging directly or indirectly in any of the following practices:

(i) Purchasing electric motors from any domestic supplier on the basis of such supplier's status as an actual or potential customer for magnet wire;

(ii) Purchasing products, goods or services from or entering into or adhering to any contract, agreement or understanding with any actual or potential domestic supplier on the condition or understanding that purchases by defendant from such supplier will be based or conditioned in any way upon defendant's sales to such supplier;

(iii) Advising any actual or potential domestic supplier that, in purchasing products, goods or services, preference will be given to suppliers that purchase products, goods or services from defendant;

(iv) Comparing or exchanging statistical data with any domestic supplier to ascertain, facilitate or further any relationship between purchases by defendant from such supplier and sales by defendant to such supplier;

(v) Issuing to defendant's personnel who have primary purchasing responsibilities lists of domestic customers and sales by defendant to such customers;

(vi) Issuing to defendant's personnel who have primary sales responsibilities lists of domestic suppliers and purchases by defendant from such suppliers; and

(vii) Establishing or maintaining any trade relations office or position, or assigning to, or permitting any of defendant's employees to have any trade relations duties or activities. ("Trade relations" means either (1) the use of purchases to aid, influence or promote sales to domestic suppliers, or (2) the consideration

of sales to domestic suppliers as a factor in purchasing decisions.)

(B) Defendant shall file with plaintiff, within ninety (90) days of each of the first ten (10) anniversary dates of this Final Judgment, a written report setting forth by vendor the dollar and unit amount by classes of electric motors purchased by Carrier during the preceding twelve (12) month period, and the sales of magnet wire by defendant to each customer in dollars and pounds during the preceding twelve (12) month period.

VIII

Within fifteen (15) days of the entry of this Final Judgment defendant shall send a copy of this Final Judgment to each of its known actual or potential domestic customers of magnet wire who manufacture electric motors and to each of Carrier's known actual or potential domestic suppliers of electric motors.

IX

(A) Defendant shall advise each of its executives who have primary responsibility for purchasing products, goods or services on behalf of defendant from any domestic supplier or who have primary responsibility for selling products, goods or services to domestic customers of its and their obligations under Section VII of this Final Judgment. For a period of ten (10) years from the date of entry of this Final Judgment, defendant shall maintain a program to insure compliance with this Final Judgment, which program shall include the following with respect to each of the persons described immediately above:

(i) The distribution to them and to their successors of this Final Judgment;

(ii) The annual distribution to them and to their successors of a written directive setting forth defendant's policy regarding reciprocal dealing with actual and potential suppliers and customers and compliance with this Final Judgment, with such directive to include—

(a) An admonition that noncompliance with such policy and this Final Judgment will result in appropriate disciplinary action determined by defendant which may include dismissal; and

(b) Advice that defendant's legal counsel are available at all reasonable times to confer with such persons regarding any compliance questions or problems.

(B) Beginning ninety (90) days after the entry of this Final Judgment, and continuing annually thereafter for ten (10) years, defendant shall file with plaintiff and under seal with the Court an annual statement setting forth steps it has taken during the preceding year to discharge its obligation under this section. This statement shall be accompanied by copies of all written directives issued by defendant during the prior year with respect to compliance with this Final Judgment.

X

For a period of ten (10) years from the date of entry of this Final Judgment, defendant shall not acquire, without the prior consent of plaintiff or, if plaintiff does not give its consent, without the approval of the Court, any of the assets (except goods or merchandise acquired in the ordinary course of business), stock or share capital of, or merge with, any person which manufactures and sells HVAC Equipment in the United States or did so in its last fiscal year immediately preceding such acquisition.

XI

For the purpose of determining or securing compliance with this Final Judgment, and subject to any legally recognized privilege, from time to time:

(A) Duly authorized representatives of the Department of Justice shall, upon written request of the Attorney General or of the Assistant Attorney General in charge of the Antitrust Division, and on reasonable notice to defendant made to its principal office, be permitted:

(i) Access during the office hours of defendant to inspect and copy such books, ledgers, accounts, correspondence, memoranda and other records and documents in the possession or under the control of defendant, who may have counsel present, as relate to any matters contained in this Final Judgment; and

(ii) Subject to the reasonable convenience of defendant and without restraint or interference from it, to interview officers, employees and agents of defendant, who may have counsel present, regarding any such matters.

(B) Upon the written request of the Attorney General or the Assistant Attorney General in charge of the Antitrust Division, made to defendants principal office, defendant shall submit such written reports, under oath if requested, with respect to any of the matters contained in this Final Judgment, as may be requested.

No information obtained by the means provided in this Section shall be divulged by any representative of the Department of Justice to any person other than a duly authorized representative of the Executive Branch of the United States, except in the course of legal proceedings to which the United States is a party, or for the purpose of securing compliance with this Final Judgment, or as otherwise required by law.

If at the time information or documents are furnished by defendant to plaintiff, defendant represents and identifies in writing the material in any such information or documents to which a claim of protection may be asserted under Rule 26(c)(7) of the Federal Rules of Civil Procedure, and defendant marks each pertinent page of such material, "Subject to claim of protection under Rule 26(c)(7) of the Federal Rules of Civil Procedure," then ten (10) days notice shall be given by plaintiff to defendant prior to divulging such material in any legal proceeding (other than a grand jury proceeding) to which defendant is not a party.

XII

Jurisdiction is retained by this Court for the purpose of enabling either party to this Final Judgment to apply to this Court at any time for such further orders or directions as may be necessary or appropriate for the construction or carrying out of this Final Judgment, for the modification of any of the provisions hereof, for the enforcement of compliance herewith and for the punishment of any violations thereof.

XIII

Except for any residual obligations defendant may have pursuant to Sections IV, V and VII(B) hereof, this Final Judgment shall terminate and cease to be effective ten (10) years from the date of its entry.

XIV

Entry of this Final Judgment is in the public interest.

_____,

United States District Judge.

Appendix A

Addison Products Co., 215 Talbot Street, Addison, Michigan 49220.
Airtemp Corporation, 1600 Webster, Dayton, Ohio 45404.
Amana Refrigeration, Inc., Main Street, Amana, Iowa 52204.
The American Air Filter Company, 200 Central Avenue, Louisville, Kentucky 40277.
Armstrong Furnace Co., 851 W. 3rd Avenue, Columbus, Ohio 43212.
Bard Manufacturing Co., 520 Evansport Road, Bryan, Ohio 43506.
Bohn Heat Transfer Division, 1625 E. Voorhees Street, Danville, Illinois 61832.
The Coleman Company, Inc., 250 N. St. Francis Avenue, Wichita, Kansas 67202.
Copeland Corp., Campbell Road, Sidney, Ohio 45365.
Crane Company, 300 Park Avenue, New York, New York 10022.
Dunham-Bush, Inc., 178 South Street, West Hartford, Connecticut 06110.
Duo-Therm Div. of Motor Wheel Corp., 509 S. Poplar, La Grange, Indiana 56761.
Emerson Electric Co., 8100 W. Florissant Avenue, St. Louis, Missouri 63136.
Environmental Controls, 13310 Industrial Park Blvd., Minneapolis, Minnesota 55441.
Eubank Manufacturing Enterprises, Inc., P.O. Box 7576, Long View, Texas 76502.
Fasco Industries Inc., 601 N. Federal Hwy., Boca Raton, Florida 33432.
Fedders Corporation, Edison, New Jersey 08817.
Franklin Electric Co., 402 E. Spring Street, Bluffton, Indiana 46714.
Fraser & Johnston Company, 3374 T Enterprise Avenue, Hayward, California 94545.
Friedrich Air-Cond. & Refrig. Co., 4200 N. Pan Am Exp., San Antonio, Texas 78295.
Gaffers & Sattler, Inc., 4851 S. Alemeda, Los Angeles, California 90058.
General Electric Company, 3135 Easton Avenue, Fairfield, Connecticut 06431.
Goettl Air-Cond., Inc., 2005 T E. Indian School Rd., Phoenix, Arizona 85016.
Gould Century, 10 Gould Center, Rolling Meadows, Illinois 60008.
Heat Controller, Inc., 1900 Wellworth at Losey, Jackson, Michigan 49203.
Heil-Quaker Corporation, 647 Thompson Lane, Nashville, Tennessee 37204.
Intertherm, Inc., 3804 Part Avenue, St. Louis, Missouri 63110.
ITT Environmental Products Division, 320 Park Avenue, New York, New York 10022.

Johnson Corporation, 851 W. 3rd Avenue, Columbus, Ohio 43212.
Lear Siegler, Inc., 3171 S. Bundy Dr., Santa Monica, California 90406.
Lennox Industries, Inc., 200 S. 12th Avenue, Marshalltown, Iowa 50158.
Lowe's Companies, Inc., North Wilkesboro, North Carolina 28659.
Luxaire, Inc., West of Filbert Street, Elyria, Ohio 44036.
Marathon, Randolph and Cherry Streets, P.O. Box 1407, Wausau, Wisconsin 54401.
The Marvair Company, Cordele Ind. Inc., Cordele, Georgia 31015.
McDonald Manufacturing Co., A.Y., 12th and Pine Street, Dubuque, Iowa 52001.
McGraw-Edison Co., Air Comfort Div., 333 W. River, Elgin, Illinois 60120.
McQuay-Perfex, Inc., 13600 Industrial Park Blvd., P.O. Box 1551, Minneapolis, Minnesota 55440.
Miller-Picking Corp., P.O. Box 130–TR, Johnstown, Pennsylvania 15907.
Montgomery Ward & Co., Inc., Montgomery Ward Plaza, Chicago, Illinois 60671.
Mueller Climatrol Corp., Woodridge Avenue, Edison, New Jersey 08817.
National Union Electric Corp., 66 Field Point Rd., Greenwich, Connecticut 07830.
Northrup, Inc., P.O. Box 452, Hutchins, Texas 75141.
Patco Co., 6955 Central H'way, Pennsauken, New Jersey 08110.
Reliance Electric Co., 24701 Euclid Avenue, Cleveland, Ohio 44117.
RMR-Jard, P.O. Box 469, Elkton, Maryland 21921.
Rheem Manufacturing Co., 767 Fifth Avenue, New York, New York 10022.
Sears, Roebuck & Co., Sears Tower, Chicago, Illinois 60684.
The Singer Company Climate Control Div., 1300 Federal Blvd., Carteret, New Jersey 07008.
A. O. Smith Corp., P.O. Box 584, Milwaukee, Wisconsin 53201.
McNeil Corp., Southwest Mfg. Div., 10 N. Elliott, Aurora, Missouri 65605.
Square D Co., Sun Dial Plant, Executive Plaza, Palatine, Illinois 60067.
Tappan Co., Tappan Park, Mansfield, Ohio 44901.
Tecumseh Products Co., 100 E. Patterson Street, Tecumseh, Michigan 49286.
Thermo Products, North Judson, Indiana 46366.
Torrid Manufacturing Corp., 1248 Poplar Place S., Seattle, Washington 98144.
The Trane Company, 3600 Pammel Creek Rd., La Crosse, Wisconsin 54601.
Typhoon Air Conditioning, 1135 Ivanhoe Rd., Cleveland, Ohio 44110.
Universal Motors, 1552 Harrison Street, Oshkosh, Wisconsin 54901.
Vilter Mfg. Corp., 2223 First Street, Milwaukee, Wisconsin 53207.
Westinghouse Electric Corp., Com.-Ind. A/C Div., P.O. Box 2510, Staunton, Virginia 24401.
Westinghouse Electric Corp., Res. A/C Div., 5005 Interstate Dr., N. Norman, Oklahoma 73069.
Whirlpool, Lakeshore and Monte Rd., Benton Harbor, Michigan 49022.
White Consolidated Industries, 11770 Berea Rd., Cleveland, Ohio 44111.
Williamson Company, 3500 Madison Rd., Cincinnati, Ohio 45209.
Wylain, Inc., 17250 Dallas Pkwy., Dallas, Texas 75248.
York Division Borg-Warner Corp., P.O. Box 1592, York, Pennsylvania 17405.
John Zink Company, 4401 S. Peoria Street, Tulsa, Oklahoma 74105.
Zone Aire Corp., P.O. Box 3517 CRS, Johnson City, Tennessee 37601.

U.S. District Court, Northern District of New York

United States of America, Plaintiff, v. *United Technologies Corporation*, Defendant.
78 CIV. 580.
Filed: September 11, 1980.

Competitive Impact Statement

The Government, pursuant to Section 2(b), of the *Antitrust Procedures and Penalties Act* (15 U.S.C. § 16(b)), files this Competitive Impact Statement in connection with the proposed consent judgment submitted for entry in this civil antitrust proceeding.

I

Nature and Purpose of the Proceeding

On November 13, 1978, the Government filed a civil antitrust complaint under Section 15 of the Clayton Act (15 U.S.C. § 25) to prevent and enjoin defendant United Technologies Corp. ("United") from carrying out a tender offer to acquire approximately 50 percent of the issued and outstanding common shares of Carrier Corp. ("Carrier") in alleged violation of Section 7 of the Clayton Act (15 U.S.C. § 18). The complaint alleged that the effects of such acquisition might be to substantially lessen competition in the manufacture and sale of 1) unitary and applied heating and air conditioning systems because Carrier would be entrenched as a leader in those markets by its access to United's broad technological resources; and 2) magnet wire in that it would create a structure conducive to reciprocal dealing.

The court's entry of the proposed consent judgment will terminate this action, except that the court will retain jurisdiction over the matter for possible further proceedings to construe or carry out the judgment, to modify any of its provisions, to enforce compliance with the judgment, or to punish violations of any of its provisions.

II

The Events Giving Rise to the Alleged Violation

Prior to United's tender offer Carrier was the 191st largest industrial corporation in the United States with sales of $1.3 billion.

The complaint alleges that Carrier is a leader in the manufacture and sale of unitary heating and air conditioning systems in the United States. Unitary heating and air conditioning systems are generally contained within a single metal unit manufactured and assembled at the plant, and are used in residential and commercial structures. Total domestic sales of such systems were approximately $1.5 billion in 1977. During that year, Carrier's sales were about $316 million, about twice the size of its nearest competitor in the production of such systems. In 1977 it produced about 20% of the residential unitary systems and 32% of the commercial unitary systems sold in the United States. As noted in the complaint, the manufacture and sale of unitary equipment is a relatively concentrated market in which the four top producers, including Carrier, account for 50% of total industry sales.

Carrier is also a dominant producer of applied heating and air conditioning systems, which are integrated central systems used in large multistory commercial structures. The complaint alleges that Carrier produced approximately 45% of the applied systems sold in the United States in 1977. Total industry sales of applied systems in 1977 were about $220 million. As alleged in the complaint, the applied market is highly concentrated with three producers, including Carrier, accounting for about 90% of total industry sales.

In 1977, United had net sales of over $5.5 billion making it the 34th largest industrial corporation in the United States. A producer of aircraft engines and rockets, as well as a variety of other products, United, through its Essex Controls Division, also manufactures appliance control devices, including control devices used with heating and air conditioning equipment. Control devices serve to improve the performance and efficiency of heating and air conditioning systems. United's expenditures for research and development were approximately $385 million in 1977. United has a corporate policy of promoting and coordinating research and development among its divisions.

The complaint states that producers of heating and air conditioning systems, including Carrier, are engaged in research and development efforts to improve the reliability and efficiency, especially the energy efficiency, of those systems. The complaint alleges that the acquisition of Carrier by United "would create a firm possessing financial and broad-based technological resources far in excess of the resources possessed by the vast majority of Carrier's competitors in unitary and applied systems." Access to such resources through the acquisition would entrench Carrier in its position as a leading company in those markets.

The complaint, in a second count, alleges that Carrier is a significant purchaser of fan and hermetic motors, which are used in heating and air conditioning systems. In 1978, Carrier accounted for approximately 9% of total domestic purchases of fan motors and 14% of total domestic purchases of hermetic motors. United is a leading manufacturer of magnet wire, accounting for about 25% of the approximately $500 million of annual industry sales of magnet wire in the United States. Magnet wire is an essential component of the fan and hermetic motors purchased by Carrier.

The complaint alleges that the effect of the combination of Carrier, a purchaser of fan and hermetic motors, with United, a leading manufacturer of magnet wire, may be to create a structure conducive ot reciprocal dealing and thereby lessen competition in the manufacture and sale of magnet wire, an already concentrated market in which four companies, including United, predominate.

At the time the complaint was filed, November 13, 1978, the Government also filed

a motion seeking to preliminarily enjoin the tender offer.* A hearing on the Government's (and Carrier's) motions for a preliminary injunction commenced the following day, November 14, 1978, and concluded on November 23, 1978. The court denied the motions for a preliminary injunction. In a full written opinion, the court held that the Government (as well as Carrier) had "failed to show a probability of success in proving that Carrier will receive substantial competitive advantages through access to United's technology so as to entrench Carrier by raising barriers to entry and by dissuading smaller firms from aggressively competing." As for the Government's reciprocity count, the court held that the proof "had not demonstrated a likelihood of success on the merits in proving a market structure conducive to reciprocity * * *." The court noted, however, that the Government had raised serious questions going to the merits on several issues, which required determination upon a full trial.

The court's ruling was appealed to the Second Circuit Court of Appeals and was sustained on December 18, 1978. On February 9, 1979, the District Court, after full arguments, issued a hold separate order requiring United to maintain Carrier as a separate corporate entity with its own research and development activities appropriate to a corporation of its size. The court, however, did not bar United form acquiring the remaining outstanding shares of Carrier stock. In July 1979, the remaining outstanding shares of Carrier stock were acquired by United.

The Government and United have engaged in various types of pretrial discovery. Concurrently, upon the proposal of United, extensive settlement negotiations have been conducted. These negotiations have resulted in the proposed final judgment which is the subject of this statement.

III

Explanation of the Proposed Consent Judgment

The Government and United have stipulated that the proposed judgment may be entered by the court at any time after compliance with the Antitrust Procedures and Penalties Act. The judgment provides that there has been no admission by any party with respect to any issue of fact or law. Under Section 2(e) of the Antitrust Procedures and Penalties Act, entry of the judgment is conditioned upon a determination by the court that its entry will be in the public interest.

The proposed judgment provides important relief in three areas: (a) it requires United to grant to any person who makes a written application within ten years of the entry of the judgment a license to practice the patents, related know-how necessary to practice the patents and unpatented heating and air conditioning Trade Secrets which United, owns or may acquire within seven years of the entry of the judgment, and which—in the case of patented technology—has been licensed to or used by Carrier and—in the case of related know-how and Trade Secrets—has been used by Carrier to make heating and air conditioning equipment or components; (b) it restricts United from acquiring any other domestic manufacturer of heating and air conditioning equipment for a period of ten years; and (c) it imposes certain duties and restrictions upon United designed to prevent the occurrence of reciprocity effects and reciprocal dealing.

United may restrict the use of any licenses which it grants under the judgment to the manufacture and sale of heating and air conditioning equipment or components for use on such equipment produced by the person who has received the license from United.

The technology covered by the judgment consists of patents and the related know-how necessary to practice such patents, as well as non-patented Trade Secrets.[1]

The judgment requires United to identify in writing the technology which is licensed to or used by Carrier to make heating and air conditioning equipment or components and which is therefore available for licensing to other persons. For this purpose, United must, within 15 days of the entry of the judgment, file with the court and submit to approximately seventy companies which have been designated by the Government and are associated with the heating and air conditioning industry, a listing of all patents, related know-how information and Trade Secrets which are available for licensing under the judgment. Thereafter, United must identify and additional patents, related know-how or Trade Secrets which become available for licensing in written reports to be filed with the court within forty-five days after such technology has been used by Carrier or within fifteen days after a written license to use such technology has been granted to Carrier. United is also required to send copies of the reports it has filed with the court to those persons who have been or are designated by the Government as well as any other person who requests to be placed on United's mailing list for this purpose.

Under the proposed judgment, any person who wishes to obtain the technology in question must apply to United for a license. The prospective licensee may be required to pay a royalty or fee for the use of the patent, related know-how or Trade Secret. United must, within 20 days of receiving a written application, notify the prospective licensee of the amount of royalty or fee it considers reasonable. If United and the prospective licensee are unable to agree upon a reasonable amount, United must apply to the court for a determination of what constitutes a reasonable royalty or fee. In any such court proceeding, the burden of proving the reasonableness of the royalty or fee it is seeking shall be on United. The licensing agreement shall include a provision at the option of the licensee that it is cancellable at any time after one year by the licensee upon 30 days notice to United.

The proposed judgment also sets forth several safeguards designed to prevent United from exploiting any reciprocal structure in the magnet wire industry created by the acquisition and to discourage reliance upon that structure by suppliers of fan and hermetic motors to Carrier and customers of magnet wire from United. Among these safeguards are provisions prohibiting United from issuing to its personnel who have primary purchasing responsibilities any lists of domestic customers and sales by United to such customers. United is also barred from issuing to its personnel who have primary sales responsibilities any lists of domestic suppliers and purchases by United from such suppliers. United must submit annual reports to the Government for ten years from the entry of the judgment setting forth by vendor the unit and dollar amount of Carrier's purchases of fan and hermetic motors and United's sales of magnet wire in dollars and pounds to each of its customers. This data will enable the Government to monitor the effects of the reciprocal structure on the purchase of motors by Carrier and the sales of magnet wire by United.

In addition, United is prohibited, for ten years, from acquiring, without the prior consent of the Government or the approval of the court, any assets or stock of any other manufacturer of heating and air conditioning equipment in the United States.

The judgment also provides methods for determining United's compliance with its terms. The Government, for ten years from the entry of the judgment, has the right to inspect the books and records of United; to interview employees and agents of United; and to request written reports under oath from United with respect to any matters contained in the proposed judgment.

The Competitive Effects of the Proposed Judgment

The proposed consent judgment is designed to prevent the occurrence of the anticompetitive effects of the acquisition alleged in the complaint. The main thrust of count one of the complaint is that Carrier will be entrenched as the leading seller of unitary and applied heating and air conditioning equipment as a result of the transfer of technology from United. The proposed judgment protects against this anticompetitive danger by mandating that any technology, subject to the judgment, that is transferred by United to Carrier be made available for a reasonable royalty or fee to any person for use in the manufacture in the United States of heating and air conditioning equipment or components made for such person's heating and air conditioning equipment. Thus, it eliminates the primary competitive advantage which it was alleged that Carrier would obtain from the acquisition. Additionally, by giving such persons the opportunity to avail themselves of United's technology (provided it has been licensed to or used by Carrier), the judgment

*On September 25, 1978, Carrier had filed a private antitrust action seeking to prevent the tender offer and also a motion to preliminarily enjoin the tender offer. Its motion had been scheduled by the court to be heard on November 14, 1978.

[1] The decree defines Trade Secret to mean: any written information that discloses any unpatented invention, process, formula, method or computer software which is treated as secret by defendant * * * is unobvious * * * and is novel in that it has no commercial equivalent that is used by, or is commercially available to, any of Carrier's competitors. * * *

may affirmatively stimulate competition in research and development to improve the performance and efficiency of heating and air conditioning equipment and components, including controls, because companies other than Carrier will be able to add United's store of knowledge to their own and use it to produce newer, better and more efficient products.

The provision of the judgment that prohibits United from acquiring any other domestic manufacturer of heating and air conditioning equipment without the consent of the Government or the approval of the court will likewise protect against the entrenchment of Carrier in the heating and air conditioning industry by preventing it from increasing its share of the market through an anticompetitive acquisition.

The proposed judgment also affords effective relief with respect to the second count of the complaint, which states that United's acquisition of Carrier would create a structure conducive to reciprocal dealing. The judgment provides substantial safeguards to prevent United from exploiting any such structure. In addition, the existence of the judgment and its publication should aid significantly in preventing motor manufacturers from relying on any such structure in deciding from what source to buy magnet wire.

The Government believes that the proposed judgment will prevent the occurrence of the anticompetitive effects set forth in the complaint, and that, therefore, the disposition of this proceeding without further litigation is appropriate and in the public interest.

V

Procedures Available for Modification of the Proposed Judgment

As provided by the Antitrust Procedures and Penalties Act, any person who believes that the proposed judgment should be modified may submit written comments relating to the proposed judgment to Ralph T. Giordano, Chief, New York Office, Antitrust Division, United States Department of Justice, Room 3630, 26 Federal Plaza, New York, New York 10278, within the 60-day period provided by the Act. These comments and the Government's responses to them will be filed with the court and published in the **Federal Register**. All such comments will be given due consideration by the Government, which remains free to withdraw its consent to the proposed judgment at any time prior to its entry. Additionally, the proposed judgment provides that the court retains jurisdiction over this action, and that the parties may apply to the court for interpretation, modification, or enforcement of its provisions.

VI

Alternative Relief Proposals Considered by the Government

Among the alternative relief considered by the Government was the complete divestiture of Carrier. While the complaint does not explicitly pray for this remedy, it did seek *inter alia* to enjoin United's tender offer. Issuance of such an injunction would have prevented United's acquisition of Carrier. The court having refused to preliminarily enjoin the acquisition, an alternative remedy to that prayed for by the complaint is the divestiture of Carrier.

However, in view of the court's opinion in refusing to preliminarily enjoin the acquisition, United's refusal to consider a settlement based on the divestiture of Carrier, and the likelihood that meaningful relief could be obtained without such divestiture, it was concluded that the divestiture of Carrier did not constitute a basis for a negotiated judgment. The Government also concluded that an attempt to obtain divestiture of Carrier by going to trial was not justified in that effective and meaningful relief short of divestiture could be obtained from United without incurring the risks inherent in litigation. Moreover, even were the Government to overcome at a full trial the problems found by the court in its decision on the motion for a preliminary injunction and to prevail on the merits, the court might not grant divestiture. Rather, the court might choose to require only injunctive relief tailored to the specific nature of the violation, similar to that set forth in the proposed consent judgment.

Nearly every provision of the proposed judgment was thoroughly negotiated both as to substance and language. The present proposal differs in three major respects from the judgment originally proposed by the Government to United. The changes are as follows:

1. Proposed Divestiture of Essex Controls Division

The Essex Controls Division (Essex), a division of the Essex Group, Inc., a United subsidiary, produces and sells a wide range of controls, both ordinary mechanical and electro-mechanical devices as well as more advanced electronic controls, to manufacturers of appliances, including heating and air conditioning equipment. Its sales of electronic controls applicable to heating and air conditioning equipment represent only a fraction of its total sales; in 1978, Essex's sales of such electronic controls were approximately $500,000 out of total sales of about $100 million. Its sales of conventional, non-electronic controls applicable to heating and air conditioning equipment were approximately $13.4 million in 1978. Essex was not then and is not now a leader in the sale or the development of electronic controls for appliances, including heating and air conditioning equipment.

The Government initially proposed the divestiture of Essex as an additional safeguard to prevent the entrenchment of Carrier through a transfer of technology from United. While Essex itself was regarded as only a limited source of technology in view of the natue of its business and its position in the controls industry,[2] the concept was that it might possibly act as a conduit of the heating and air conditioning technology possessed or developed by United. The Government proposed the divestiture of the entire Essex Controls Division, rather than the small part of its business which pertained to heating and air conditioning, in order to maintain Essex as a viable entity and thereby facilitate divestiture.

During the settlement negotiations, United agreed to stronger technology transfer provisions, covering a longer period of time, than it had originally offered. Such an agreement made the divestiture of Essex unnecessary to effectively protect aginst the entrenchment of Carrier through United's technology. Moreover, as noted, Essex's sales of electronic controls applicable to heating and air conditioning equipment are quite low and represent only a fraction of its total sales. Essex is not a leader in the sale or development of such controls. Hence, the Government concluded that the divestiture of Essex was not required in order to obtain effective relief in this matter.

2. Period of On-Going Technology Subject to Licensing

The proposed judgment provides for the licensing of technology made available to Carrier since its acquisition by United as well as technology (on-going technology) made available within seven years of the entry of the judgment. The Government had initially sought ten years of on-going technology but concluded that seven years would provide sufficient relief against any anticompetitive entrenchment potentialities.

In stating that the ten years of on-going technology initially proposed by the Government was inappropriate, United argued that its review of prior Government antitrust consent judgments indicated that the scope of the licensing provisions proposed in the instant matter was unprecedented, even in cases involving predatory conduct.

While it is difficult to determine with precision the exact number of years of on-going technology required to adequately protect against the entrenchment of Carrier through United's technology, the Government has concluded that seven years provides ample protection. In this respect, it should be noted that the licensing provisions of the proposed judgment cover almost nine years in that they include any technology made available to Carrier at any time since its acquisition in January 1979 by United as well as during the seven year period from the entry of the judgment. It is also noteworthy that the scope of the licensing provisions set forth in the proposed judgment is, in part, considerably more extensive than that provided in any other Government antitrust consent judgment of which we are aware.

3. Definitions of Categories of Technology Subject to Licensing

The categories of technology to which the licensing provisions in the proposed final judgment apply are set forth with somewhat greater specificity than in the Government's initial proposal. The changes, resulting from discussions with United and industry sources, will facilitate compliance with and enforcement of the judgment.

[2] Essex controls' manufacturing capabilities do not significantly advantage Carrier in that Carrier already has facilities which produce some of its electronic controls. Air conditioning manufacturers may also contract with small microprocessor firms to produce electronic controls designed by such manufacturers.

Remedies Available to Potential Private Plaintiffs

Section 4 of the Clayton Act (15 U.S.C. § 16) provides that any person who has been injured as a result of conduct prohibited by the antitrust laws may bring suit in federal court to recover three times the damages such person has suffered as well as costs and reasonable attorney fees. Entry of the proposed judgment in this proceeding will neither impair nor assist the bringing of any such private actions. Under Section 5(a) of the Clayton Act (U.S.C. § 16(a)), the proposed judgment would have no *prima facie* effect in any lawsuits which may be pending or hereafter brought against United.

Carrier had opposed the United tender offer in a private antitrust suit. That suit was dropped after United acquired Carrier. No other private actions based on the alleged violation have been filed.

Other Materials

No materials or documents of the type described in Section 2(b) of the Antitrust Procedures and Penalties Act were considered in formulating the proposed judgment. Consequently, none are submitted.

Philip F. Cody, Edward Friedman, Jacqueline W. Distelman, Charles V. Reilly, Jorge Guttlein, *Attorneys, Department of Justice, Antitrust Division, 26 Federal Plaza, Room 3630, New York, New York 10278, Telephone: (212) 264-0394.*

[FR Doc. 80-29473 Filed 9-23-80; 8:45 am]

BILLING CODE 4410-01-M

Office of Attorney General

Proposed Consent Decree in Action in Which the United States Seeks to Enjoin the Discharge of Pollutants by the AMAX Nickel Refining Co., Inc.

In accordance with Departmental policy, 28 C.F.R. 50.7 (1979), notice is hereby given that on September 12, 1980, a proposed consent decree in *United States of America* v. *AMAX Nickel Refining Company, Inc.* was lodged with the United States District Court for the Eastern District of Louisiana. The proposed consent decree is in settlement of an action against the AMAX Nickel Refining Company, Inc. under the Clean Water Act, as amended, 33 U.S.C. 1319 (b) and (d), for violations of the discharge limitations contained in the National Pollutant Discharge Elimination System Permit issued to AMAX under the authority of 33 U.S.C. 1342. The proposed decree requires installation of a new wastewater treatment system and other pollution control equipment at AMAX's Braithwaite, Louisiana plant. The decree further requires AMAX to pay a civil penalty for past violations of its NPDES permit and provides for the payment of penalties for failure to meet the interim discharge limitations set forth in the proposed consent decree prior to completion of the new control systems.

The proposed decree may be exmained at the office of the United States Attorney, Hale Boggs Federal Building, 500 Camp Street, New Orleans, Louisiana 70130, and the Pollution Control Section, Land and Natural Resources Division, Department of Justice, 9th and Pennsylvania Avenue, N.W., Washington, D.C. 20530. A copy of the proposed decree may be obtained in person or by mail from the Pollution Control Section, Land and Natural Resources Division, Department of Justice, 9th and Pennsylvania Avenue, N.W., Washington, D.C. 20530. The Department of Justice will receive written comments relating to the proposed consent decree for a period of thirty days from the date of this notice. Comments should be directed to the Assistant Attorney General for the Land and Natural Resources Division, Department of Justice, 9th and Pennsylvania Avenue, N.W., Washington, D.C. 20530 and should refer to *United States of America* v. *AMAX Nickel Refining Company, Inc.*, D.J. No. 90-5-1-1-1167.

Angus MacBeth,

Deputy Assistant Attorney General, Land and Natural Resources Division.

[FR Doc. 80-29511 Filed 9-23-80; 8:45 am]

BILLING CODE 4410-01-M

[Order No. 911-80]

Modification to List of Bureau of Prisons Institutions

AGENCY: Department of Justice.

ACTION: Notice.

SUMMARY: Attorney General Order No. 646-76 (41 F.R. 14805) classifies and lists the various Bureau of Prisons institutions. Order No. 649-76 (41 F.R. 19233), Order No. 842-79 (44 F.R. 44629), Order No. 854-79 (44 F.R. 58002), Order No. 860-79 (44 F.R. 64922), and Order No. 904-80 (45 F.R. 52284) amended the list published by Order No. 646-76. This Order further modifies the list by designating a new Federal Detention Center at Fort Chaffee, Arkansas.

EFFECTIVE DATE: September 15, 1980.

FOR FURTHER INFORMATION CONTACT: Ira B. Kirschbaum, Assistant General Counsel, Bureau of Prisons, U.S. Department of Justice, 320 1st Street, N.W., Washington, D.C. 20534 (202-724-3062).

By virtue of the authority vested in me by sections 4003, 4081 and 4082 of Title 18, United States Code, Order No. 646-76, as amended, is further amended at Subparagraph F to designate the facility (stockade) operated by the Bureau of Prisons at Fort Chaffee, Arkansas as a Federal Detention Center.

Dated: September 15, 1980.

Benjamin R. Civiletti,

Attorney General.

[FR Doc. 80-29513 Filed 9-23-80; 8:45 am]

BILLING CODE 4410-01-M

MINIMUM WAGE STUDY COMMISSION

Meeting

September 17, 1980.

In accordance with Section 10(a)(2) of the Federal Advisory Committee Act (Pub. L. 92-463), announcement is made of the following meeting:

Name: Minimum Wage Study Commission.
Date: Wednesday, October 8, 1980.
Time: 10:30 a.m.
Place: 1430 K Street, N.W., Suite 700.

Proposed Agenda:

1. Discussion of transportation exemptions.
2. Update of working paper on inflation.
3. Historical development of U.S. wage and hour legislation.
4. Report by MWSC contractor Dr. John Pettengill on inflation.

All communications regarding this Commission should be addressed to: Mr. Louis E. McConnell, Executive Director, 1430 K Street, N.W., Suite 500, Washington, D.C. 20005, telephone (202) 376-2450.

Next meeting of the Commission will be held Thursday, November 13, 1980.

Louis E. McConnell,

Executive Director.

[FR Doc. 80-29595 Filed 9-23-80; 8:45 am]

BILLING CODE 4510-23-M

NATIONAL SCIENCE FOUNDATION

Ad Hoc Oversight Subcommittee for Materials Research Laboratories; Meeting

In accordance with the Federal Advisory Committee Act, Pub. L. 92-463, as amended, the National Science Foundation announces the following meetings:

Name: Ad Hoc Subcommittee for Oversight of Materials Research Laboratories Program, Advisory Committee for Materials Research.
Date: October 29, and 30, 1980.
Time: 9:00 a.m.—5:00 p.m. each day
Place: Room 543, National Science Foundation, 1800 G Street, N.W., Washington, D.C. 20550
Type of Meeting: Closed both days, 9:00 a.m.—5:00 p.m.
Contact Person: Dr. Ronald E. Kagarise, Director, Division of Materials Research, Room 408, National Science Foundation, Washington, D.C. Telephone: (202) 357-9794

Purpose of Subcommittee: To provide advice and recommendations concerning management and operation of Materials Research Laboratories Program.

Agenda:

Wednesday, October 29, 1980—9:00 a.m. to 5:00 p.m.—Closed

Review and comparison of declined proposals (and supporting documentation) with successful awards under the Materials Research Laboratories Program, including review of peer review materials and other privileged documents.

Thursday, October 30, 1980—9:00 a.m. to 5:00 p.m.—Closed

9:00 a.m.—Continued evaluation of completed actions and pending proposals.

12:00 noon

1:00 p.m.—5:00 p.m.—Preparation of report on Subcommittee findings and recommendations.

Reason for closing: The Subcommittee will be reviewing grant and declination jackets which contain the names of applicant institutions and principal investigators and privileged information contained in declined proposals. This session will also include a review of the peer review documentation pertaining to applicants. These matters are within exemptions (4) and (6) of 5 U.S.C. 552b(c), Government in the Sunshine Act.

Authority to close meeting: This determination was made by the Committee Management Officer pursuant to provisions of Section 10 (d) of Pub. L. 92–463. The Committee Management Officer was delegated the authority to make such determinations by the Director, NSF on July 6, 1979.

M. Rebecca Winkler,

Committee Management Coordinator.

September 19, 1980.

[FR Doc. 80-29532 Filed 9-23-80; 8:45 am]

BILLING CODE 7555-01-M

Advisory Committee for Policy Research and Analysis and Science Resources Studies; Meeting

In accordance with the Federal Advisory Committee Act, Pub. L. 92–463, as amended, the National Science Foundation announces the following meeting.

Name: Advisory Committee for Policy Research and Analysis and Science Resources Studies.

Date and time: October 23, 1980—9:00 a.m.–5:00 p.m.; October 24, 1980—9:00 a.m.–12:00 p.m.

Place: October 23–24, 1980—Room 543; National Science Foundation, 1800 G Street NW., Washington, D.C. 20550.

Type of meeting: Open.

Contact person: Ms. Sharon Dyer, Division of Science Resources Studies, Directorate for Scientific, Technological, and International Affairs, Room L611, National Science Foundation, Washington, D.C. 20550. Telephone: (202) 634–4666. Anyone who plans to attend should contact Ms. Dyer by October 20, 1980.

Summary minutes: May be obtained from the contact person, Ms. Dyer, at the above address.

Purpose of committee: To provide advice, recommendations, and oversight concerning program emphases and directions of the Divisions of Policy Research and Analysis and Science Resources Studies.

Agenda:

Thursday, October 23, 1980

9:00 a.m.—Plenary Session

9:30 a.m.—General Session

2:00 p.m.—Sub-committee Meetings—Scientific and Technical Personnel, Industrial R&D and Innovations, PRA Dissemination, Distribution, and Publication

3:30 p.m.—Sub-committee Meetings—Technology Assessment and Risk Analysis, Energy, Environment, and Resources

Friday, October 24, 1980

9:00 a.m.—Presentation of Sub-committee Reports

10:30 a.m.—General Session

12:00 p.m.—Adjournment

M. Rebecca Winkler,

Committee Management Coordinator.

September 18, 1980.

[FR Doc. 80-29517 Filed 9-23-80; 8:45 am]

BILLING CODE 7555-01-M

Advisory Committee on Special Research Equipment (Biology Subcommittee); Meeting

In accordance with the Federal Advisory Committee Act, Pub. L. 92–463, as amended, the National Science Foundation announces the following meeting.

Name: Advisory Committee on Special Research Equipment (2-year and 4-year colleges) (Biology Subcommittee).

Date/time: November 3–4, 1980—9:00 a.m. to 5:00 p.m.

Place: Room 421, National Science Foundation, 1800 G Street NW., Washington, D.C.

Type of meeting: Closed.

Contact person: Dr. Howard H. Hines, Program Director, Room 428, National Science Foundation, Washington, D.C. 20550. Telephone: (202) 357–9615.

Purpose of committee: To evaluate research equipment proposals.

Agenda: To review and evaluate research equipment proposals as part of the selection process for awards.

Reason for closing: The proposals being reviewed include information of a proprietry or confidential nature, including technical information; financial data, such as salaries, and personal information concerning individuals associated with the proposals. These matters Are within exemptions (4) and (6) of 5 U.S.C. 552b (c), Government in the Sunshine Act.

Authority to close meeting: This determination was made by the Committee Management Officer pursuant to provisions of Section 10(d) of Pub. L. 92–463. The Committee Management Officer was delegated the authority to make such determinations by the Director, NSF on July 6, 1979.

M. Rebecca Winkler,

Committee Management Coordinator.

September 19, 1980.

[FR Doc. 80-29537 Filed 9-23-80; 8:45 am]

BILLING CODE 7555-01-M

NSF Advisory Council; Meeting

In accordance with the Federal Advisory Committee Act, Pub. L. 92–463, the National Science Foundation announces the following meeting:

Name: NSF Advisory Council.

Place: Room 540, National Science Foundation, 1800 G Street NW., Washington, D.C. 20550.

Date: Thursday, November 6, and Friday, November 7, 1980.

Time: 9:00 a.m. till 5:00 p.m. both days.

Type of meeting: Open.

Contact person: Ms. Jeanne E. Hudson, Executive Secretary, NSF Advisory Council, National Science Foundation, Room 518, 1800 G Street NW., Washington, D.C. 20550. Telephone (202) 357–9433.

Purpose of advisory council: The purpose of the NSF Advisory Council is to provide advice and counsel to the NSF Director and principal members of his staff on Foundation-wide issues which require the expertise of the many and varied disciplines and program interests represented in the Foundation.

Summary minutes: May be obtained from the contact person at above stated address.

Agenda: To review progress by the four task groups of the NSF Advisory Council and to meet with the Acting Director and Deputy Director and NSF staff.

M. Rebecca Winkler,

Committee Management Coordinator.

September 19, 1980.

[FR Doc. 80-29541 Filed 9-23-80; 8:45 am]

BILLING CODE 7555-01-M

Advisory Subcommittee for Materials Research Laboratories; Meeting

In accordance with the Federal Advisory Committee Act, Pub. L. 92–463, as amended, the National Science Foundation announces the following meeting:

Name: Advisory Subcommittee for Materials Research Laboratories.

Date: October 30 and 31, 1980.

Time: 9:00 a.m.–5:00 p.m. each day.

Place: National Science Foundation, 1800 G Street NW., Washington, D.C. 20550, Room 540.

Type of meeting: October 30, Closed. October 31, Open.

Contact person: Dr. R. J. Wasilewski, Head, Materials Research Laboratory, Room 408, National Science Foundation, Washington, D.C. 20550, Telephone (202) 357–9791.

Summary minutes: May be obtained from the Contact Person, Dr. R. J. Wasilewski, at the above stated address.
Purpose of subcommittee: To provide advice and recommendations concerning core support of research at the Materials Research Laboratories.
Agenda: October 30—Review and evaluation of research proposals and programs as part of the selection process for awards.
October 31—To review the existing MRL policy, and to provide advice and recommendations for the future program directions.
Reason for closing: The first day's meeting is closed since the proposals being reviewed include information of a proprietary or confidential nature, including technical information; financial data, such as salaries; and personal information concerning individuals associated with the proposals. These matters are within the exceptions (4) and (6) of 5 U.S.C. 552b(c), Government in the Sunshine Act.
Authority to close meeting: This determination was made by the Committee Management Officer pursuant to provisions of Section 10(d) of Pub. L. 92–463. The Committee Management Officer was delegated the authority to make such determinations by the Director, NSF on July 6, 1979.

September 19, 1980.

M. Rebecca Winkler,

Committee Management Coordinator.

[FR Doc. 8–29540 Filed 9–23–80; 8:45 am]

BILLING CODE 7555–01–M

DOE/NSF Nuclear Science Advisory Committee; Meeting

In accordance with the Federal Advisory Committee Act, Pub. L. 92–463, the National Science Foundation announces the following meeting:

Name: DOE/NSF Nuclear Science Advisory Committee.
Date and time: November 6, 1980—9:00 am–5:00 pm.
Place: Room A–410 (Enter through North Lobby), Administration Building, Department of Energy, Germantown, Maryland.
Type of meeting: Open.
Contact person: Dr. Harvey B. Willard, Program Director for Intermediate Energy Physics, National Science Foundation, Washington, DC 20550 202/357–7993.
Summary minutes: May be obtained from Ms. Lynn Martin, Physics Division, National Science Foundation, Washington, DC 20550.
Purpose of committee: To provide advice on continuing basis to both DOE and NSF on support for basic nuclear science in the United States.
Agenda:
November 6, 1980—9:00 am–5:00 pm

1. Opening remarks
2. Reports from Subcommittees/Working Groups
3. Proposed Subcommittee for Heavy Ion Facilities
4. Report from the Agencies on Fiscal Year 1981 funding and beyond
5. 1981 Facilities Subcommittee for Fiscal Year 1983 Facility Construction
6. Status of the Long Range Plan
7. Transfer of administrative support for the Committee from NSF to DOE.

September 19, 1980.

M. Rebecca Winkler,

Committee Management Coordinator.

[FR Doc. 80–29518 Filed 9–23–80; 8:45 am]

BILLING CODE 7555–01–M

Subcommittee for Anthropology of the Advisory Committee for Behavioral and Neural Sciences; Meeting

In accordance with the Federal Advisory Committee Act, Pub. L. 92–463, the National Science Foundation announces the following meeting:

Name: Subcommittee for Anthropology of the Advisory Committee for Behavioral and Neural Sciences.
Date/Time: November 12–14, 1980—9:00 a.m. to 5:00 p.m. each day.
Place: Room 338, National Science Foundation, 1800 G Street NW., Washington, D.C.
Type of meeting: Closed.
Contact person: Dr. John E. Yellen, Program Director for Anthropology, Room 320, National Science Foundation, Washington, D.C. 20550; telephone (202) 357–7804.
Purpose of committee: To provide advice and recommendations concerning support for research in anthropology.
Agenda: To review and evalute research proposals and projects as part of the selection process for awards.
Reason for closing: The proposals being reviewed include information of a proprietary or confidential nature, including technical information; financial data, such as salaries; and personal information concerning individuals associated with the proposals. These matters are within exemptions (4) and (6) of 5 U.S.C. 552b(c), Government in the Sunshine Act.
Authority to close meeting: This determination was made by the Committee Management Officer pursuant to provisions of Section 10(d) of Pub. L. 92–463. The Committee Management Officer was delegated the authority to make such determinations by the Director, NSF, on July 6, 1979.

M. Rebecca Winkler,

Committee Management Coordinator.

September 19, 1980.

[FR Doc. 80–29536 Filed 9–23–80; 8:45 am]

BILLING CODE 7555–01–M

Subcommittee for Condensed Matter Sciences; Meeting

In accordance with the Federal Advisory Committee Act, Pub. L. 92–463, as amended, the National Science Foundation announces the following meeting:

Name: Condensed Matter Sciences Subcommittee of the Advisory Committee for Materials Research.
Date: October 27 and 28, 1980.
Time: 9:00 a.m.–5:00 p.m. each day.
Place: National Science Foundation, 1800 G Street NW., Room 540, Washington, D.C. 20550.
Type of meeting: Closed, all day, October 27, 1980; Open, all day October 28, 1980.
Contact person: Dr. Lewis H. Nosanow, Section Head, Condensed Matter Sciences, Room 404, National Science Foundation, Washington, D.C. 20550, Telephone (202) 357–9787.
Summary minutes: May be obtained from the Contact Person, Dr. Lewis H. Nosanow, at the above stated address.
Purpose of subcommittee: To provide advice and recommendations concerning support for research in condensed matter sciences.
Agenda:
Monday, October 27, 1980–9:00 a.m.–5:00 p.m.
Closed all day.
Review and comparison of declined proposals (and supporting documentation) with successful awards under the Solid State Physics Program, including review of peer review materials and other privileged material.
Tuesday, October 28, 1980–9:00 a.m.–5:00 p.m.
Open all day.
General discussion of the current status and future plans of the Condensed Matter Sciences Section.
Reasons for closing: The Subcommittee will be reviewing grants and/or declination jackets which contain the names of applicant institutions and principal investigators and privileged information contained in declined proposals. This session will also include a review of the peer review of documentation pertaining to applicants. These matters are within exemptions (4) and (6) of 5 U.S.C. 552b (c), Government in the Sunshine Act.
Authority to close meeting: This determination was made by the Committee Management Officer pursuant to provisions of Section 10(d) of Pub. L. 92–463. The Committee Management Officer was delegated the authority to make such determinations by the Director, NSF on July 6, 1979.

September 19, 1980.

M. Rebecca Winkler,

Committee Management Coordinator.

[FR Doc. 80–29533 Filed 9–23–80; 8:45 am]

BILLING CODE 7555–01–M

Subcommittee for Measurement Methods and Data Resources of the Advisory Committee for Social and Economic Science; Meeting

In accordance with the Federal Advisory Committee Act, as amended, the National Science Foundation announces the following meeting:

Name: Subcommittee on Measurement Methods and Data Resources of the Advisory Committee for Social and Economic Science.

Date and time: November 14 and 15, 1980; 10:30 AM to 5:30 PM, November 14; 9:00 AM to 3:00 PM, November 15.
Place: Room 628, National Science Foundation, 1800 G Street, NW, Washington, DC 20550.
Type of meeting: Part Open—10:30 AM to 12:00 PM, November 14, 1980; Closed—1:00 PM to 5:30 PM, November 14, 1980; and 9:00 AM to 3:00 PM, November 15, 1980.
Contact person: Dr. Murray Aborn, Program Director, Measurement Methods and Data Resources, Room 312, National Science Foundation, Washington, DC 20550, Telephone (202) 357–7913.
Summary of minutes: May be obtained from the contact person Dr. Murray Aborn at the above address.
Purpose of subcommittee: To provide advice and recommendations concerning support for research and research-related projects in Measurement Methods and Data Resources.
Agenda: Open: 10:30 AM to 12:00 PM, November 14—Discussion of recent program activities.
Closed: 1:00 PM to 5:30 PM, November 14; and 9:00 AM to 3:00 PM, November 15—to review and evaluate research proposals as part of the selection process for awards.
Reason for closing: The proposals being reviewed include information of proprietary or confidential nature, including technical information; financial data, such as salaries; and personal information concerning individuals associated with the proposals. These matters are within exemptions (4) and (6) of 5 U.S.C. 552b(c), Government in the Sunshine Act.
Authority to close meeting: This determination was made by the Committee Management Officer pursuant to provisions of Section 10(d) of Pub. L. 92–463. The Committee Management Officer was delegated the authority to make such determinations by the Director, NSF, on July 6, 1979.

Dated: September 19, 1980.

M. Rebecca Winkler,

Committee Management Coordinator.

[FR Doc. 80–29539 Filed 9–23–80; 8:45 am]

BILLING CODE 7555–01–M

Subcommittee on Geography and Regional Science; Meeting

In accordance with the Federal Advisory Committee Act, as amended, Pub. L. 92–463, the National Science Foundation announces the following meeting:

Name: Subcommittee on Geography and Regional Science of the Advisory Committee for Social and Economic Science.
Date and time: October 27, 1980; 8:30 a.m.–5:00 p.m.
Place: Room 628, National Science Foundation, 18th and G Street NW., Washington, D.C. 20550.
Type of meeting: Closed.
Contact person: Barry M. Moriarty, Program Director, Geography and Regional Science, Room 312, National Science Foundation, Washington, D.C. 20550. Telephone (202) 357–7326.
Purpose of subcommittee: To provide advice and recommendations concerning support for research in Geography and Regional Science.
Agenda: To review and evaluate research proposals as part of the selection process for awards.
Reason for closing: The proposals being reviewed include information of a proprietary or confidential nature, including technical information; financial data, such as salaries; and personal information concerning individuals associated with the proposals. These matters are within exemptions (4) and (6) of 5 U.S.C. 552b(c), Government in the Sunshine Act.
Authority to close: This determination was made by the Committee Management Officer pursuant to provisions of Section 10(d) of Pub. L. 92–436. The Committee Management Officer was delegated the authority to make such determinations by the Acting Director, NSF, on February 18, 1977.

September 19, 1980.

M. Rebecca Winkler,

Committee Management Coordinator.

[FR Doc. 80–29534 Filed 9–23–80; 8:45 am]

BILLING CODE 7555–01–M

Subcommittee on History and Philosophy of Science; Meeting

In accordance with the Federal Advisory Committee Act, as amended, Pub. L. 92–463, the National Science Foundation announces the following meeting:

Name: Subcommittee on History and Philosophy of Science Advisory Committee for Social and Economic Science.
Date and time: November 6th, 7th and 8th, 1980: 9:00 a.m. to 5:00 p.m. each day.
Place: Room 421, National Science Foundation, 1800 G Street NW., Washington, D.C. 20550.
Type of meeting: Closed.
Contact person: Dr. Ronald J. Overmann, Associate Program Director, History and Philisophy of Science Program, Room 312, National Science Foundation, Washington, D.C. 20550, telephone (202) 357–9677.
Purpose of subcommittee: To provide advice and recommendation concerning support for research in History and Philosophy of Science.
Agenda: To review and evaluate research proposals as part of the selection process for awards.
Reason for closing: The proposals being reviewed include information of a proprietary or confidential nature, including technical information; financial data, such as salaries; and personal information concerning individuals associated with the proposals. These matters are within exemptions (4) and (6) of 5 U.S.C. 552b(c), Government in the Sunshine Act.
Authority to close: This determination was made by the committee Management Officer pursuant to provisions of Section 10(d) of Pub. L. 92–463. The Committee Management Officer was delegated the authority to make such determinations by the Director, NSF, on July 6, 1979.

Dated: September 19, 1980.

M. Rebecca Winkler,

Committee Management Coordinator.

[FR Doc. 80–29538 Filed 9–23–80; 8:45 am]

BILLING CODE 7555–01–M

Subcommittee on Political Science of the Advisory Committee for Social and Economic Science; Meeting

In accordance with the Federal Advisory Committee Act, Pub. L. 92–463, as amended, the National Science Foundation announces the following meeting:

Name: Subcommittee on Political Science of the Advisory Committee for Social and Economic Science.
Date and time: October 27–28, 1980; 9:00 a.m. to 5:00 p.m. each day.
Place: Room 1224, National Science Foundation, 1800 G St. NW., Washington, D.C. 20550.
Type of meeting: Closed—9:00 a.m. to 5:00 p.m. October 27–28, 1980.
Contact person: Dr. Gerald C. Wright, Jr., Program Director, Political Science Program, Room 312, National Science Foundation, Washington, D.C. 20550, Telephone (202) 357–9406.
Purpose of subcommittee: To provide advice and recommendations concerning research in Political Science.
Agenda: Closed: to review and evaluate research proposals as part of the selection process for awards.
Reason for closing: The proposals being reviewed include information of a proprietary or confidential nature, including technical information; financial data, such as salaries; and personal information concerning individuals associated with the proposals. These matters are within exemptions (4) and (6) of 5 U.S.C. 552b(c), Government in the Sunshine Act.
Authority to close meeting: This determination was made by the Committee Management Officer pursuant to provisions of Section 10(d) of Pub. L. 92–463. The Committee Management Officer was delegated the authority to make such determinations by the Director, NSF, on July 6, 1979.

September 19, 1980.

M. Rebecca Winkler,

Committee Management Coordinator.

[FR Doc. 80–29535 Filed 9–23–80; 8:45 am]

BILLING CODE 7555–01–M

OFFICE OF THE UNITED STATES TRADE REPRESENTATIVE

Determination Regarding the Application of Certain International Agreements

This notice modifies the determination published in the **Federal Register** of January 4, 1980 (45 FR 1181),[1] as amended, to reflect additional signatories to the international agreements negotiated in the Tokyo Round of Multilateral Trade Negotiations.

Paragraph 3 of the Presidential Determination Regarding the Acceptance and Application of Certain International Trade Agreements, signed December 14, 1979 (44 FR 74784), delegates the functions of the President under section 2(b) of the Trade Agreements Act of 1979 ("the Act") and section 701(b) of the Tariff Act of 1930, as amended by section 101 of the Act, to the United States Trade Representative (as designated by section 1–105 of Executive Order 12188) who exercises that authority with the advice of the Trade Policy Committee.

Now, therefore, I, Reubin O'D. Askew, United States Trade Representative, in conformity with the provisions of section 2 of the Act (93 Stat. 147), section 701 of the Tariff Act of 1930, as amended effective January 1, 1980 (93 Stat. 151), and paragraph 3 of Presidential Determination Regarding the Acceptance and Application of Certain International Trade Agreements (44 FR 74781), do determine, effective on the date of signature of this Notice, that:

1. With respect to the Agreement on Interpretation and Application of Articles VI, XVI and XXIII of the General Agreement on Tariffs and Trade, the following additional countries have accepted the obligations of the Agreement with respect to the United States and should not otherwise be denied the benefits of the Agreement:

Austria, Korea, Republic of.

In accordance with section 701(b)(1) of the Tariff Act of 1930, as amended effective January 1, 1980 (93 Stat. 151), each of these countries will be considered a "country under the Agreement".

This determination supersedes the determination made with respect to Austria in paragraph 1(b) of the determination published in the **Federal Register** of January 4, 1980 (45 FR 1182).

2. With respect to the Agreement on Implementation of Article VI of the General Agreement on Tariffs and Trade, the following additional countries have accepted the Agreement with respect to the United States and should not otherwise be denied the benefits of the Agreement:

Austria, Brazil, Czechoslavakia.

3. With respect to the Agreement on Technical Barriers to Trade, the following additional countries have accepted the Agreement with respect to the United States and should not otherwise be denied the benefits of the Agreement:

Austria, Singapore.

4. With respect to the Agreement on Import Licensing Procedures, the following additional countries have accepted the Agreement with respect to the United States and should not otherwise be denied the benefits of the Agreement:

Austria, India, Romania.

5. With respect to the Agreement on Trade in Civil Aircraft, the following additional countries have accepted the Agreement with respect to the United States and should not otherwise be denied the benefits of the Agreement:

Austria, Romania (The United States will apply article 2 of the Agreement with respect to Romania for such time as the United States accords non-discriminatory treatment to products of Romania).

6. With respect to the International Dairy Arrangement, the following additional countries have accepted the Agreement and should not otherwise be denied the benefits of the Agreement:

Austria, Uruguay.

7. With respect to the Arrangement Regarding Bovine Meat, the following additional countries have accepted the Agreement and should not otherwise be denied the benefits of the Agreement:

Austria, Romania, Uruguay.

Reubin O'D. Askew,

United States Trade Representative.

[FR Doc. 80–29574 Filed 9–23–80; 8:45 am]

BILLING CODE 3190–01–M

[1] A complete list of signatories to the agreements negotiated in the Multilateral Trade Negotiations may be obtained from the Public Affairs Office, United States Trade Representative, 1800 G Street, N.W., Washington, D.C. 20506.

Advisory Committee for Trade Negotiations; Meeting

Pursuant to the Federal Advisory Committee Act, 5 U.S.C. App. (the Act), notice is hereby given that a meeting of the Advisory Committee for Trade Negotiations will be held Wednesday, October 8, 1980, from 1:30 p.m. to 4:30 p.m. at the Office of the U.S. Trade Representative, 1800 G Street, N.W., Washington, D.C.

The purpose of this meeting will be to review and discuss the status of, and the United States strategy and the implementation, the Multilateral Trade Agreements, and other matters of trade policy pertaining to the responsibilities assumed by the USTR under the President's Reorganization Plan #3.

In accordance with section 10(d) of the Act, the meeting will not be open to the public because information falling within the purview of 5 U.S.C. 552(c)(1) (the exception to the Government in the Sunshine Act for matters specifically required by Executive order to be kept secret in the interest of foreign policy) will be reviewed and discussed.

More detailed information can be obtained by contacting Phyllis O. Bonanno, Director, Office of Private Sector Liaison, Office of the United States Trade Representative, Executive Office of the President, Washington, D.C. 20506.

Phyllis O. Bonanno,

Director, Office of Private Sector Liaison.

Advisory Committee for Trade Negotiations

Determination of Closing of Meeting

The meeting of the Advisory Committee for Trade Negotiations (the Advisory Committee) to be held Wednesday, October 8, 1980, from 1:30 p.m. to 4:30 p.m. at the Office of the United States Trade Representative, 1800 G Street, N.W., Washington, D.C., will involve a review and discussion of the status of, and United States strategy and objectives for, the implementation of the Multilateral Trade Agreements, and other matters of trade policy pertaining to the responsibilities assumed by the USTR under the President's Reorganization Plan #3. Such review and discussion will deal with information properly classified pursuant to Executive Order 11652 and specifically required by such order to be kept secret in the interests of national security (i.e., the conduct of foreign relations) of the United States. All members of the Advisory Committee have appropriate security clearances. Accordingly, I hereby determine that this meeting of the Advisory Committee will be concerned with matters listed in section 552b(c)(1) of Title 5 of the United States Code.

Reubin O'D. Askew,

U.S. Trade Representative.

[FR Doc. 80–29575 Filed 9–23–80; 8:45 am]

BILLING CODE 3190–01–M

Services Policy Advisory Committee; Meeting

Pursuant to the Federal Advisory Committee Act, 5 U.S.C. App. (the Act), notice is hereby given that a meeting of the Services Policy Advisory Committee will be held Monday, October 6, 1980, from 1:30 p.m. to 4:30 p.m. at the Office of the United States Trade Representative, 1800 G Street, NW., Washington, D.C.

The purpose of this meeting will be to develop a foreign commercial policy for

international trade in services and possible negotiating strategies.

In accordance with section 10(d) of the Act, the meeting will not be open to the public because information falling within the purview of 5 U.S.C. 552b(c)(1) (the exception to the Government in the Sunshine Act for matters specifically required by Executive order to be kept secret in the interest of foreign policy) will be reviewed and discussed.

More detailed information can be obtained by contacting Phyllis O. Bonanno, Director, Office of Private Sector Liaison, Office of the United States Trade Representative, Executive Office of the President, Washington, D.C. 20506.

Phyllis O. Bonanno,

Director, Office of Private Sector Liaison.

Services Policy Advisory Committee

Determination of Closing of Meeting

The meeting of the Services Policy Advisory Committee (the Advisory Committee) to be held Monday, October 6, 1980, from 1:30 p.m. to 4:30 p.m. at the Office of the United States Trade Representative, 1800 G Street, NW., Washington, D.C., will involve a discussion and development of U.S. foreign commercial policy for international trade in services and possible negotiating strategies. Such discussion will deal with information properly classified pursuant to Executive Order 11652 and specifically required by such order to be kept secret in the interests of national security (i.e., the conduct of foreign relations) of the United States. All members of the Advisory Committee have appropriate security clearances. Accordingly, I hereby determine that this meeting of the Advisory Committee will be concerned with matters listed in section 552b(c)(1) of Title 5 of the United States Code.

Reubin O'D. Askew,

U.S. Trade Representative.

[FR Doc. 80-29576 Filed 9-23-80; 8:45 am]

BILLING CODE 3190-01-M

SECURITIES AND EXCHANGE COMMISSION

[Release No. 21717 (70-6381)]

Arkansas Power & Light Co.; Notice of Proposal To Increase Amount of Short-Term Borrowings and To Extend Time Period During Which Such Borrowings May Be Made

September 18, 1980.

Notice is hereby given that Arkansas Power & Light Company ("AP&L"), First National Building, Little Rock, Arkansas 72203, an electric utility subsidiary of Middle South Utilities, Inc., a registered holding company, has filed a post-effective amendment to a declaration previously filed with this Commission pursuant to the Public Utility Holding Company Act of 1935 ("Act") designating Sections 6(a) and 7 of the Act and Rule 50 promulgated thereunder as applicable to the proposed transaction. All interested persons are referred to the amended declaration, which is summarized below, for a complete statement of the proposed transaction.

By an order dated January 2, 1980 in this matter (HCAR No. 21380) the Commission authorized AP&L to issue and sell form time to time, through June 30, 1981, up to $150,000,000 aggregate principal amount at any one time outstanding of its short-term notes to banks and commerical paper to a dealer. AP&L now proposes that the aggregate principal amount of all such unsecured short-term promissory notes to commercial banks that it is permitted to have outstanding at any one time be increased to the lesser, from time to time, of $165,000,000 or 10 percent of the aggregate of (a) the total principal amount of all bonds or other securities representing secured indebtedness issued or assumed by AP&L and then outstanding, and (b) the capital and surplus of AP&L as then stated on its books of account. AP&L also proposes that the time through which such bank notes and commercial paper may be issued be extended to December 31, 1981 and that the latest maturity date thereof be extended to September 30, 1982.

The proceeds of such borrowings will primarily be used by AP&L to finance its construction program and to discharge or refund its outstanding obligations incurred therefor.

It is stated that no special or separable fees, commissions and expenses will be incurred by AP&L in connection with the proposed transaction. It is stated that no state or federal regulatory authority, other than this Commission, has jurisdiction over the proposed transaction.

Notice is further given that any interested person may, not later than October 13, 1980, request in writing that a hearing be held on such matter, stating the nature of his interest, the reasons for such request, and the issues of fact or law raised by the filing which he desires to controvert; or he may request that he be notified if the Commission should order a hearing thereon. Any such request should be addressed: Secretary, Securities and Exchange Commission, Washington, D.C. 20549. A copy of such request should be served personally or by mail upon the declarants at the above-stated address, and proof of service (by affidavit or, in case of an attorney at law, by certificate) should be filed with the request. At any time after said date, the declaration, as amended or as it may be further amended, may be permitted to become effective as provided in Rule 23 of the General Rules and Regulations promulgated under the Act, or the Commission may grant exemption from such rules as provided in Rules 20(a) and 100 thereof or take such other action as it may deem appropriate. Persons who request a hearing or advice as to whether a hearing is ordered will receive any notices or orders issued in this matter, including the date of the hearing (if ordered) and any postponements thereof.

For the Commission, by the Division of Corporate Regulation, pursuant to delegated authority.

George A. Fitzsimmons,

Secretary.

[FR Doc. 80-29527 Filed 9-23-80; 8:45 am]

BILLING CODE 8010-01-M

[Release No. 21718; (70-6311)]

General Public Utilities Corp.; Notice of Proposed Further Pledge of Collateral in Connection With Short-Term Notes to Banks by Subsidiary Company

September 18, 1980.

In the Matter of General Public Utilities Corporation, 100 Interpace Parkway, Parsippany, New Jersey 07054, Jersey Central Power & Light Company, Madison Avenue at Punch Bowl Road, Morristown, New Jersey 07960, Metropolitan Edison Company, 2800 Pottsville Pike, Muhlenberg Township, Berks County, Pennsylvania 19605, and Pennsylvania Electric Company, 1001 Broad Street, Johnstown, Pennsylvania 15907.

Notice is hereby given that General Public Utilities Corporation ("GPU"), a registered holding company, and its electric utility subsidiaries, Jersey Central Power and Light Company ("JCP&L"), Metropolitan Edison Company ("Met-Ed"), and Pennsylvania Electric Company ("Penelec"), have filed with this Commission a further post-effective amendment to their application-declaration in this proceeding pursuant to Section 6(b) of the Public Utility Holding Company Act of 1935 ("Act") regarding the following proposed transaction. All interested persons are referred to the amended application-declaration, which is summarized below, for a complete statement of the proposed transaction.

By order dated June 19, 1979, (HCAR No. 21107), this Commission authorized GPU, JCP&L, Met-Ed, and Penelec to issue, sell, and renew from time to time

through October 1, 1981, their respective promissory notes (the "Notes") having a maturity of not more than six months from the date of issue, pursuant to a revolving credit agreement with a syndicate of commercial banks (the "loan agreement"). Aggregate borrowings under the loan agreement are limited to $500,000,000 and Met-Ed's borrowings thereunder are limited to $125,000,000. At the date of filing, Met-Ed had $81,000,000 in borrowings outstanding under the loan agreement. The indebtedness under the loan agreement is secured by an unconditional guarantee given by GPU, as well as the pledge by GPU to the banks of the common stock of JCP&L, Met-Ed, Penelec, and GPU Service Corporation, and in the cases of JCP&L and Met-Ed, certain other collateral. In addition, as authorized by the Commission's order dated January 28, 1980, Met-Ed has sold $13,000,000 of its first mortgage bonds to the Banks.

By order dated May 23, 1980, the Pennsylvania Publict Utility Commission ("PaPUC") directed that Met-Ed's capital and operation costs associated with its investment in Unit No. 1 of the Three Mile Island nuclear generating station be removed from Met-Ed's base rates. By orders dated August 28, 1980, the PaPUC denied Met-Ed's petition for extraordinary rate relief in the amount of $35 million and instituted proceedings with respect to a Met-Ed request for rate relief aggregating approximately $76.5 million. In light of these actions, the banks have advised Met-Ed that its borrowings under the loan agreement will not be permitted to exceed Met-Ed's "liquid assets" (as defined in the letter) pledged to the banks plus Met-Ed's deferred energy account from time to time. (Met-Ed's deferred energy balance is expected to decline in the future.) The banks have stated, however, that they are prepared to permit a further increase in the amount of permitted borrowings by a further pledge of collateral.

Consequently, Met-Ed is now requesting authority to grant to the banks as additional security for Met-Ed borrowings under the loan agreement a first priority security interest in substantially all of Met-Ed's accounts receivable. Met-Ed proposed to pledge to the banks its existing and future accounts receivable, together with the proceeds thereof, from the sale of electric energy to retail and wholesale customers. At July 31, 1980, Met-Ed had approximately $25 million of such accounts receivable.

In all other respects, the transactions as heretofore authorized by the Commission would remain unchanged.

The PaPUC has authorized Met-Ed to issue and sell up to $150 million aggregate principal amount of Notes under the loan agreement. Met-Ed will submit to the PaPUC the proposal to pledge its accounts receivable to the banks as additional collateral under the loan agreement. No other state commission and no federal commission, other than this Commission, has jurisdiction over the proposed transaction. The fees and expenses to be incurred in connection with the proposed pledge are to be filed by amendment.

Notice is further given that any interested person may, not later than October 15, 1980, request in writing that a hearing be held on such matter, stating the nature of his interest, the reasons for such request, and the issues of fact or law raised by said post-effective amendment to the application declaration which he desires to controvert; or he may request that he be notified if the Commission should order a hearing thereon. Any such requests should be addressed: Secretary, Securities and Exchange Commission, Washington, D.C. 20549. A copy of such request should be served personally or by mail upon the applicants-declarants at the above-stated addresses, and proof of service (by affidavit or, in case of an attorney at law, by certificate) should be filed with the request. At any time after said date, the application-declaration, as now amended or as it may be further amended, may be granted and permitted to become effective as provided in Rule 23 of the General Rules and Regulations promulgated under the Act, or the Commission may grant exemption from such rules as provided in Rules 20(a) and 100 thereof or take such other action as it may deem appropriate. Persons who request a hearing or advice as to whether a hearing is ordered will receive any notices or orders issued in this matter including the date of the hearing (if ordered) and any postponements thereof.

For the Commission, by he Divison of Corporate Regulation, pursuant to delegated authority.

George A. Fitzsimmons,

Secretary.

[FR Doc. 80-29526 Filed 9-23-80; 8:45 am]

BILLING CODE 8010-01-M

[Release No. 11364; (812-4632)]

Kemper Investor Life Insurance Co., et al.; Application for an Order Pursuant to Section 11 of the Investment Company Act of 1940 Approving Certain Offers of Exchange and Pursuant to Section 6(c) of the Act Granting Exemptions From Sections 2(a)(32), 2(a)(35), 22(c), 26(a), 26(a)(2)(C), 27(a)(3), 27(c)(1), 27(c)(2), and 27(d) of the Act, and Rule 22c-1, Thereunder

September 18, 1980.

Notice is hereby given that Kemper Investors Life Insurance Company ("KILICO"), Kemper Investors Life Insurance Company Variable Account C ("Account"), a separate account of KILICO registered under the Investment Company Act of 1940 ("Act") as a unit investment trust, and Kemper Income and Capital Preservation Fund, Inc. ("KICPF"), Kemper High Yield Fund, Inc. ("KHYF"), Kemper Total Return Fund, Inc. ("KTRF"), Kemper Growth Fund, Inc. ("KGF"), Kemper Option Income Fund, Inc. ("KOIF"), Kemper Money Market Fund, Inc. ("KMMF"), and Kemper Fund For Government Guaranteed Securities, Inc. ("KFGGS") (collectively, the "Funds") 120 South LaSalle Street, Chicago, Ill. 60603, each of which is registered under the Act as an open-end, diversified investment management company, and Kemper Financial Services, Inc. ("KFS"), the investment manager and principal underwriter for the Funds, registered as an investment adviser under the Investment Advisers Act of 1940 and as a broker/dealer under the Securities Exchange Act of 1934 (collectively referred to hereinafter as "Applicants"), filed an application on March 10, 1980, and amendments thereto on June 25, 1980, July 18, 1980, September 5, 1980 and September 8, 1980, for an order of the Commission pursuant to Section 11 of the Act, approving certain offers of exchange and pursuant to Section 6(c) of the Act, granting exemptions from Sections 2(a)(32), 2(a)(35), 22(c), 26(a), 26(a)(2)(C), 27(a)(3), 27(c)(1), 27(c)(2) and 27(d) of the Act insofar as such exemptions are necessary to permit the transactions described below. All interested persons are referred to the Application on file with the Commission for a statement of the representations made therein, which are summarized below.

KILICO is a stock life insurance company organized under laws of the State of Illinois. The Account is a separate account of KILICO. The Account was established by KILICO for the purpose of funding variable annuity

contracts issued by KILICO. The Account shall consist of seven (7) divisions, each one of which is invested solely in shares of one of the following funds: KICPF, KFGGS, KHYF, KGF, KOIF, KMMF and KTRF. A contract owner will be credited with accumulation units in the appropriate separate account division(s) based upon the purchase payment applied.

Under the variable annuity contracts proposed by Applicants, the initial purchase payment for a contract would be in cash without application of a sales charge. Upon purchase of a contract, a contract owner would select up to three (3) divisions of the separate account in which the owner desires investment and may also allocate the purchase payment to KILICO's general account. The minimum initial purchase payment for contracts issued other than pursuant to a tax qualified plan is $2,500, and additional purchase payments of at least $500 may be made under such contracts. With respect to contracts issued pursuant to tax qualified plans, the minimum purchase is $50 per payment, and the maximum purchase payment shall be that permitted under the type of qualified plan involved. Further, contract owners may transfer all or part of their interest in a separate account division to another separate account division or KILICO's general account or all or part of the contract owner's interest in KILICO's general account to a separate account division, subject to certain minimum transfer limitations and subject to the limitation that a contract owner may have an interest in a maximum of three (3) separate account divisions at any particular time.

Further, a contract owner may withdraw up to ten percent (10%) of the contract value in any contract year without assessment of any charge. If the contract owner withdraws an amount in excess of ten percent (10%) of the contract value in any contract year, the amount withdrawn in excess of ten percent (10%) of contract value will be subject to a contingent deferred sales charge ("Withdrawal Charge"). The Withdrawal Charge starts at 6.00% in the first contribution year and reduces by 1.00% each contribution year so that there is no charge in the seventh and later contribution years. The Withdrawal Charge would also apply as a charge against contract value with respect to amounts which are annuitized and are in the first six (6) contribution years. However, in no event, shall the aggregate Withdrawal Charges assessed against a contract exceed nine percent (9%) of the aggregate purchase payments made under the contract.

KILICO will assess the entire separate account with a daily charge for mortality and expense risks equal, on an annual basis, to 1.00% per annum. Also KILICO intends to assess a records maintenance charge of $25 per year against each contract participating in the separate account.

Section 2(a)(35)

Section 2(a)(35) defines "sales load" as the difference between the price of a security to the public and that portion of the proceeds from its sale which is received and invested or held for investment by the issuer less any portion of such difference deducted for trustees' or custodians' fees, insurance premiums, issue taxes or administrative expenses or fees which are not properly chargeable to sales or promotional expenses. Applicants assert that the proposed Withdrawal Charge is consistent with the intent of the definition of "sales load" contained in the Act. The Withdrawal Charge will be retained by KILICO to reimburse it solely for expenses related to the sale of the contracts and is thus within the Section 2(a)(35) definition of sales load but for the time of imposition of the charge. However, Applicants have requested an exemption from the provisions of Section 2(a)(35) to the extent such exemption may be necessary, to implement the proposed pricing of their contracts.

Section 22(c) and Rule 22c–1

Rule 22c–1, promulgated under Section 22(c) of the Act, in pertinent part, prohibits a registered investment company issuing a reedeemable security from selling, redeeming or repurchasing any such security except at a price based on the current net asset value of such security. When the contract owner withdraws all or a part of the contract value, the proceeds paid on such withdrawal will be based on the current net asset value. The Withdrawal Charge will be deducted at the time of withdrawal in arriving at the contract owner's proportionate share or account value. While Applicants do not believe that the imposition of the contingent deferred sales charge is violative of Section 22(c) or Rule 22c–1, Applicants have requested an exemption from the provisions of Section 22(c) and Rule 22c–1 thereunder, to the extent necessary, to offer the contracts.

Sections 26(a) and 27(c)(2)

Section 26(a) and 27(c)(2) of the Act provide, in substance, that a registered unit investment trust or issuer of a periodic payment plan certificate and any depositor or underwriter for such investment company is prohibited from selling periodic payment plan certificates unless the proceeds of all payments, other than the sales load, are deposited with a qualified bank as trustee and are held under an indenture or agreement containing the following provisions: (1) that the trustee or custodian be a bank of a designated size; (2) that the assets be held in trust and only certain charges be made against them; (3) that the trustee or custodian may only resign in a specified fashion; and (4) that certain records be kept and notice be given to securities holders in the event of substitution of the trust's securities.

Section 27(c)(2) prohibits a registered investment company or depositor or underwriter for such company from selling periodic payment plan certificates unless the proceeds of all payments, other than sales loads, on such certificates are deposited with a trustee or custodian having the qualifications prescribed in Section 26(a)(1) and are held by such trustee or custodian under an agreement containing substantially the provisions required by Sections 26(a)92) and 26(a)(3) of the Act.

Applicants state that the provisions of Section 26(a) were designed to assure performance of contractual obligations under periodic payment plans, to minimize the opportunities for misuse of the assets of unit investment trusts and to prevent sponsors from reaping hidden profits. However, because KILICO is subject to extensive and rigorous supervision and control by the California Insurance Department, Applicants contend that such supervision and control provides assurance against misfeasance and affords the essential protection of trusteeship. Further, under California law, Applicants state that KILICO may not abrogate its obligation under the contracts.

Under the foregoing circumstances, the Applicants contend that the dangers against which Section 26(a) is directed are not present. Therefore an exemption from Sections 26(a) and 27(c)(2) is requested, to the extent necessary, to allow KILICO to be the custodian of the assets of the Account.

Sections 26(a)(2)(C) and 27(c)(2)

Section 26(a)(2)(C) of the Act, as here pertinent, provides, in substance, that no payment to the depositor or principal underwriter of a unit investment trust shall be allowed the custodian bank as an expense, except a fee, not exceeding such reasonable amounts as the Commission may prescribe, as compensation for performing

bookkeeping and other administrative expenses normally performed by the custodian.

An exemption is requested, to the extent necessary, from the requirements of Section 26(a)(2)(C) so that KILICO may collect the Withdrawal Charge. Applicants submit that the requirements imposed by Section 26(a)(2)(C) were not intended to prevent the depositor of a unit investment trust from imposing a sales load. They assert that the Withdrawal Charge to be imposed upon withdrawal of contract values is designed to recover costs related solely to sales of the Contracts. Also, Applicants contend that the contracts offered are not periodic payment contracts. However, Applicants have requested an exemption from the provisions of Section 27(c)(2), to the extent necessary, to offer the contracts. Applicants submit that the Withdrawal Charge is a sales loads to which Section 27(c)(2) applies and that the deferral of the imposition of the charge until withdrawal of contract value, an event which may never occur, should not be construed in any way as a violation of Section 27(c)(2). Applicants have requested an exemption from the provisions of Sections 26(a)(2)(C) and 27(c)(2), to the extent necessary, to permit the imposition of the Withdrawal Charge and to offer the contracts.

Applicants consent to the exemptions requested from Sections 26(a), 26(a)(2)(C) and 27(c)(2) being made subject to the following conditions; (1) that the charges to variable annuity contract owners for administrative services shall not exceed such reasonable amounts as the Commission shall prescribe, jurisdiction being reserved for such purpose, and (2) that the payments of sums and charges out of the assets of the Account shall not be deemed to be exempted from regulation by the Commission by reason of the requested order, provided that the Applicants' consent to this condition shall not be deemed to be a concession to the Commission of authority to regulate the payments of sums and charges out of such assets other than charges for administrative services; and Applicants reserve the right in any proceeding before the Commission or in any suit or action in any court, to assert that the Commission has no authority to regulate the payments of such other sums or charges.

Section 27(a)(3)

Section 27(a)(3) of the Act, in pertinent part, prohibits any registered investment company issuing periodic payment plan certificates from selling any such certificate if the amount of sales load deducted from any or such first payment, or the amount deducted from any subsequent payment exceeds proportionately the amount deducted from any other subsequent payment. Applicants assert that the contracts issued are not periodic payment plans but nevertheless request an exemption, to the extent necessary, to offer the contracts. Under the contracts, in the event that a total withdrawal of a contract is requested within one calendar year of a partial withdrawal with respect to which all or a portion of the amount withdrawn was not subject to the Withdrawal Charge because of the ten percent (10)% free withdrawal provision such amount or amounts previously withdrawn will be added to the contract value at the time total withdrawal is requested for the purpose of calculating the Withdrawal Charge. Applicants assert that this provision enables KILICO to recover a portion of the sales expenses relating to totally withdrawn contracts and not be subject to a manipulative partial withdrawal of the ten percent (10%) of contract value in order to avoid assessment of the charge levied upon total withdrawal. THe one calendar year period was selected in order to provide a reasonable cap on the time period. Applicants maintain that this method permits maximization of the amount of free partial withdrawal to those contract owners who have purchased the contract for the long term but prevents use of the partial free withdrawal to avoid a charge by any party intending to totally withdraw contract value. Applicants assert further that such a schedule for imposition of the Withdrawal Charge does not constitute a disproportionate deduction of a sales expense because the imposition of such schedule only occurs in the event of total withdrawal of a contract, assessed against the entire contract value and in no event shall the aggregate Withdrawal Charge assessed exceed nine percent (9%) of aggregate purchase payments made under the contract. However, Applicants have requested an exemption from the provisions of Section 27(a)(3), to the extent necessary, to offer the contracts.

Section 2(a)(32) and 27(d)

Section 2(a)(32) of the Act, in pertinent part defines "redeemable security" as any security under the terms of which the holder, upon its presentation to the issuer, is entitled to receive approximately his proportionate share of the issuer's current net assets or the cash equivalent thereof. Section 27(d) of the Act, in pertinent part, requires that the holder of a periodic payment plan certificate be able to surrender the certificate under certain circumstances with recovery of certain front-end sales charges. Applicants assert that the contracts offered are not periodic payment contracts but request exemption from such Section 27(d), to the extent necessary, to offer the contracts. Applicants submit that the imposition of the Withdrawal Charge does not violate Sections 2(a)(32) and 27(d). Applicants assert that Sections 2(a)(32) and 27(d) contemplate the assessment of an initial sales load and that under the contracts, the net amount invested is the gross purchase payments. Thus, the owner's proportionate share or account value would be the gross purchase payments, plus or minus any increase or decrease in value less the Withdrawal Charge. Applicants assert that deferring the imposition of the charge in no restricts the contract owner from receiving his proportionate share or account value on withdrawal. Applicants contend that the Withdrawal Charge is contingent upon an event which might never occur, and that the purchaser's initial amount invested is maximized thus providing a benefit to the purchaser. Applicants have requested an exemption from the provisions of Sections 2(a)(32) and 27(d), to the extent necessary, to permit the imposition of the Withdrawal Charge and to offer the contracts.

Section 27(c)(1)

Section 27(c)(1) of the Act, in pertinent part, prohibits any registered investment company issuing periodic payment plan certificates, or depositor or underwriter of such company, to sell any such certificates unless it is a redeemable security. Applicants assert that the contracts issued are not periodic payment plans but nevertheless request an exemption, to the extent necessary, to offer the contracts. Applicants submit that its Withdrawal Charge is not a restriction on redemption under Section 27(c)(1). Applicants assert that deferring the imposition of the sales charge in no way restricts the contract owner from receiving his proportionate share or current value on withdrawal and has the effect, through deferral of sales charge until contract value is withdrawn, of increasing the contract value available for redemption. However, Applicants have requested an exemption from the operation of the provisions of Section 27(c)(1), to the extent necessary, to permit the Withdrawal Charge to be imposed only upon withdrawal of contract values.

Section 11

Section 11(a) of the Act makes it unlawful for any registered open-end investment company or principal underwriter therefor to make an offer to the holder of a security of such company or of any other open-end investment company to exchange his security for a security in the same or another such company on any basis other than the relative not asset values of the respective securities to be exchanged unless the terms of the offer have first been submitted to and approved by the Commission. Section 11(c) provides that, irrespective of the basis of exchange, the provisions of subsection (a) shall be applicable to any offer of exchange of any security of a registered open-end company for a security of a registered unit investment trust and any type of offer of exchange of the securities of registered unit investment trusts for the securities of any other investment company.

Applicants contend that a transfer privilege is consistent with the protection of contract owners and the purposes clearly intended by the policy and provisions of the Act. The only purpose of the transfer provision is to provide contract owners the right to invest in a separate account division holding the shares of a fund whose investment objective aligns with the contract owner's financial needs and investment discretion, from time to time. This provides the contract owner with greater flexibility in balancing his particular needs for retirement income.

Applicants state that the transfer privilege would involve an "exchange" from one division of the separate account to another division of the same separate account. Applicants contend that there would be no change in or exchange of the variable annuity contracts for which the accounts serve as funding vehicles. However, in the event Section 11(a) may be considered applicable by virtue of Section 11(c), Applicants are seeking, to the extent necessary, approval of the Commission pursuant to Section 11 of the Act for an exemption from the provisions of Section 11, so that Applicants may offer owners of the contracts the transfer provisions described above, subject to the right of KILICO to change non-discriminatory restrictions on such transfers described above by reducing or increasing the minimum amounts transferable or the time period beween transfers or to otherwise suspend or terminate the transfer privilege at any time.

Section 6(c)

Section 6(c) of the Act provides, in part, that the Commission may conditionally or unconditionally exempt any person, security, or transactions, or any class or classes or persons, securities, or transactions from any provision of the Act or any rule or regulation under the Act if, and to the extent, such exemption is necessary or appropriate in the public interest and consistent with the protection of investors and the purposes fairly intended by the policy and provisions of the Act.

Notice is further given that any interested person may, not later than October 14, 1980, at 5:30 p.m., submit to the Commission in writing a request for a hearing on the matter accompanied by a statement as to the nature of his/her interest, the reasons for such request, and the issues, if any, of fact or law proposed to be controverted, or he/she may request that he/she be notified if the Commission shall order a hearing thereon. Any such communications should be addressed:

Secretary Securities and Exchange Commission, Washington, D.C. 20549. A copy of such request shall be served personally or by mail upon the Applicants at the address stated above. Proof of such service (by affidavit or, in the case of an attorney-at-law, by certificate) shall be filed contemporaneously with the request. As provided by Rule 0–5 of the Rules and Regulations promulgated under the Act, an order disposing of the Application will be issued as of course following October 14, 1980 unless the Commission thereafter orders a hearing upon request or upon the Commission's own motion. Persons who request a hearing, or advice as to whether a hearing is ordered, will receive any notice and orders issued in this matter, including the date of the hearing (if ordered) and any postponements thereof.

For the Commission, by the Division of Investment Management, pursuant to delegated authority.

George A. Fitzsimmons,

Secretary.

[FR Doc. 80–29528 Filed 9–23–80; 8:45 am]

BILLING CODE 8010–01–M

[Release No. 11363; (812–4705)]

Midwest Income Investment Co.; Filing of Application for Order Pursuant to Section 6(c) of the Act Granting Exemptions From the Provisions of Section 2(a)(41) of the Act and Rules 2a–4 and 22c–1 Thereunder

September 18, 1980.

Notice is hereby given that Midwest Income Investment Company ("Applicant"), 508 Dixie Terminal Building, Cincinnati, Ohio 45202, registered under the Investment Company Act of 1940 ("Act") as an open-end, non-diversified, management investment company, filed an application on July 25, 1980 requesting an order of the Commission, pursuant to Section 6(c) of the Act, exempting Applicant from the provisions of Section 2(a)(41) of the Act and Rules 2a–4 and 22c–1 thereunder, to the extent necessary to permit Applicant's assets to be valued at amortized cost. All interested persons are referred to the application on file with the Commission for a statement of the representations contained therein, which are summarized below.

Applicant states that it is a "money market fund" offering its shares to individuals, corporations, fiduciaries and institutions as a means of investing in a professionally-managed portfolio with the objective of obtaining high current income to the extent available on debt and money market instruments, and to the extent consistent with protection of capital. It is further stated that Applicant's shares are sold without a sales charge. Applicant states that the minimum initial investment in its shares is $500, with additional investments accepted in amounts of $50 or more. At the close of business on June 30, 1980, Applicant represents that its aggregate net assets amounted to approximately $120,179,000. Applicant further represents that it invests in debt instruments which include securities issued by the United States Government or its agencies or instrumentalities, instruments of banks and savings and loan companies, repurchase agreements and commercial paper.

At present, Applicant states, all of its net income is declared and paid daily as a dividend. "Net income" for this purpose consists of (1) all interest income and discount earned (including original issue and market discount), (2) plus or minus all realized short term capital gains or losses and unrealized gains or losses on portfolio securities, and (3) minus all Applicant's expenses. It is stated that because the daily dividend is paid in the form of

additional shares of Applicant and includes both realized and unrealized gains and losses on portfolio securities, Applicant's per-share net asset value remains constant at $1,000. Applicant states that, on the other hand, the dividend as a percentage of net asset value can fluctuate significantly in comparison with other investment vehicles designed for the investment of excess cash balances.

Applicant proposes to value its portfolio securities by means of the amortized cost method of valuation, subject to the conditions enumerated below. Applicant asserts that sophisticated professional and institutional investors own shares representing a large portion of Applicant's total assets, and that these shareholders and others like them represent an increasingly important source of potential investment in Applicant. Applicant represents that it has been its management's experience that in order to continue to attract such investors and retain them as shareholders, Applicant must maintain a stable net asset value, preferably at $1,000 per share, together with a constant and steady flow of investment income. It is asserted that Applicant's present practice of including in dividends realized and unrealized gains and losses on portfolio securities results in payments which are not reflective of Applicant's earned net income and in recordkeeping inconvenience for investors who desire segregation of principal and interest in these payments. Thus, Applicant contends, valuation of its portfolio securities on the basis of amortized cost would benefit its shareholders by enabling Applicant to maintain a constant $1,000 per share purchase and redemption price, while at the same time providing shareholders with a steady flow of investment income through daily dividends which reflect Applicant's net income as earned.

Applicant represents that it has never owned portfolio securities having maturities exceeding thirty (30) months, and that its dollar-weighted average portfolio maturity has been less than 120 days since November 10, 1979. Furthermore, it is stated that it has been Applicant's experience that with respect to securities maturing in one year or less, there is normally a negligible difference between market value and the amortized cost value of such securities. Applicant believes that the valuation of its portfolio securities on the basis of amortized cost will enable it to maintain more effectively its price per share at $1,000 while providing shareholders the opportunity to receive a flow of investment income less subject to fluctuation than under its present procedures.

Rule 22c–1 adopted under the Act provides, in part, that no registered investment company issuing any redeemable security, nor principal underwriter therefor, shall sell, redeem or repurchase any such security except at a price based on the current net asset value of such security. Rule 2a–4 adopted under the Act provides, in pertinent part, that the "current net asset value" of a redeemable security in pertinent part, that the "current net asset value" of a redeemable security issued by a registered investment company used in computing its price for the purposes of distribution, redemption and repurchase shall be an amount which reflects calculations made substantially in accordance with the provisions of the rule, with estimates used where necessary or appropriate. Rule 2a–4 further provides that portfolio securities for which marker quotations are readily available shall be valued at current market value, and other securities shall be valued at fair value as determined in good faith by the board of directors. Section 2(a)(41) defines, in pertinent part, the term "value" in a similar manner.

In Investment Company Act Release No. 9786, dated May 31, 1977, the Commission expressed its view that, among other things, (1) Rule 2a–4 under the Act requires that portfolio instruments of "money market" funds be valued with reference to market factors, and (2) it would be inconsistent with the provisions of Rule 2a–4 for a "money market" fund to value its portfolio instruments (except those having maturities of 60 days or less) on an amortized cost basis.

Section 6(c) of the Act provides, in pertinent part, that the Commission, by order upon application, may conditionally or unconditionally exempt any person, security or transaction or any class or classes of persons, securities or transactions from any provisions of the Act or of any rule or regulation under the Act, if and to the extent that such exemption is necessary or appropriate in the public interest and consistent with the protection of investors and the purposes fairly intended by the policy and provisions of the Act.

Applicant states that its board of directors has determined in good faith that in light of Applicant's characteristics, and absent unusual or extraordinary circumstances, the amortized cost method of valuing portfolio securities is appropriate and preferable for Applicant and reflects the fair value of such securities. Applicant has agreed that the following conditions maybe imposed in any order of the Commission granting the exemptive relief requested:

(1) In supervising Applicant's operations and delegating special responsibilities involving its portfolio management to Applicant's investment adviser, Applicant's board of directors undertakes—as a particular responsibility within the overall duty of care owed to its shareholders—to establish procedures reasonably designed, taking into account current market conditions and Applicant's investment objectives, to stabilize its net asset value per share, as computed for the purpose of distribution, redemption, and repurchase, at $1,000 per share.

(2) Included within the procedures to be adopted by Applicant's board of directors shall be the following:

(a) Review by the Applicant's board of directors, as its deems appropriate and at such intervals as are reasonable in light of current market conditions, to determine the extent of deviation, if any, of Applicant's net asset value per share as determined by using available market quotations from the $1,000 amortized cost price per share, and the maintenance of records of such review.[1]

(b) In the event such deviation from the $1,000 amortized cost price per share of Applicant exceeds ½ of 1 percent, a requirement that Applicant's board of directors will promptly consider what action, if any, should be initiated.

(c) Where Applicant's board of directors believes the extent of any deviation from the $1,000 amortized cost price per share may result in material dilution or other unfair results to investors or existing shareholders of Applicant, it shall take such action as it deems appropriate to eliminate or to reduce to the extent reasonably practicable such dilution or unfair results, which may include: redemption of shares in kind; the sale of portfolio instruments prior to maturity to realize capital gains or losses, or to shorten Applicant's average portfolio maturity; withholding dividends; utilizing a net asset value per share as determined by using available market quotations; or a revaluation of all or an appropriate

[1] Applicant states that to fulfill this condition it intends to use actual quotations or estimates of market value reflecting current market conditions chosen by Applicant's board of directors in the exercise of its discretion to be appropriate indicators of value. In addition, Applicant states that the quotations or estimates utilized may include, *inter alia*, (1) quotations or estimates of market value for individual portfolio intruments, or (2) values obtained from yield data relating to classes of money market instruments published by reputable sources.

portion of the portfolio based on current market factors.

(3) Applicant will maintain a dollar-weighted average portfolio maturity appropriate to its objective of maintaining a stable net asset value per share; provided, however, that Applicant will not (a) purchase any instrument with a remaining maturity of greater than one year, or (b) maintain a dollar-weighted average portfolio maturity in excess of 120 days.[2]

(4) Applicant will record, maintain and preserve permanently in an easily accessible place a written copy of the procedures (and any modifications thereto) described in condition 1 above, and Applicant will record, maintain and preserve for a period of not less than six years (the first two years in an easily accessible place) a written record of the board of directors' considerations and actions taken in connection with the discharge of its responsibilities, as set forth above, to be included in the minutes of its board of directors' meetings. The documents preserved pursuant to this condition shall be subject to inspection by the Commission in accordance with Section 31(b) of the Act as though such documents were records required to be maintained pursuant to rules adopted under Section 31(a) of the Act.

(5) Applicant will limit its portfolio investments, including repurchase agreements, to those United States dollar-denominated instruments which its board of directors determines present minimal credit risks, and which are of "high quality" as determined by any major rating service or, in the case of any instrument that is not rated, of comparable quality as determined by its board of directors.

(6) Applicant will include in each quarterly report, as an attachment to Form N-1Q, a statement as to whether any action pursuant to condition 2(c) was taken during the preceding fiscal quarter, and, if any action was taken, will describe the nature and circumstances of such action.

Notice is further given that any interested person may, not later than October 13, 1980, at 5:30 p.m., submit to the Commission in writing, a request for a hearing on the application accompanied by a statement as to the nature of his interest, the reasons for such request and the issues, if any, of fact or law proposed to be controverted, or he may request that he be notified if the Commission shall order a hearing thereon. Any such communication should be addressed: Secretary, Securities and Exchange Commission, Washington, D.C. 20549. A copy of such request shall be served personally or by mail upon Applicant at the address stated above. Proof of such service (by affidavit or, in the case of an attorney-at-law, by certificate) shall be filed contemporaneously with the request. As provided by Rule 0-5 of the Rules and Regulations promulgated under the Act, an order disposing of the application herein will be issued as of course following said date unless the Commission thereafter orders a hearing upon request or upon the Commission's own motion. Persons who request a hearing, or advice as to whether a hearing is ordered, will receive any notices and orders issued in this matter, including the date of the hearing (if ordered) and any postponement thereof.

For the Commission, by the Division of Investment Management, pursuant to delegated authority.

George A. Fitzsimmons,

Secretary.

[FR Doc. 80-29530 Filed 9-23-80; 8:45 am]

BILLING CODE 8010-01-M

[2] In fulfilling this condition, if the disposition of a portfolio instrument results in a dollar-weighted average portfolio maturity in excess of 120 days, Applicant will invest its available cash in such a manner as to reduce its dollar-weighted average portfolio maturity to 120 days or less as soon as reasonably practicable.

[File No. 1-7744]

Pacific Scientific Co.; Application To Withdraw From Listing and Registration

September 17, 1980.

The above named issuer has filed an application with the Securities and Exchange Commission pursuant to Section 12(d) of the Securities Exchange Act of 1934 (the "Act") and Rule 12d2-2(d) promulgated thereunder, to withdraw the specified securities from listing and registration on the American Stock Exchange ("Amex").

The reasons alleged in the application for withdrawing this security from listing and registration include the following:

The common stock of Pacific Scientific Company (the "Company") is listed and registered on the Amex and the New York Stock Exchange ("NYSE"). The Company has determined that the direct and indirect costs and expenses of dual listing does not justify maintaining the common stock on the Amex and the NYSE and believes that dual listing would fragment the market for its common stock.

This application relates solely to withdrawal of the common stock from listing and registration on the Amex and shall have no effect upon the continued listing of such stock on the NYSE. The Amex has posed no objection to this matter.

Any interested person may, on or before October 8, 1980, submit by letter to the Secretary of the Securities and Exchange Commission, Washington, D.C. 20549, facts bearing upon whether the application has been made in accordance with the rules of the Exchange and what terms, if any, should be imposed by the Commission for the protection of investors. The Commission, based on the information submitted to it, will issue an order granting the application after the date mentioned above, unless the Commission determines to order a hearing on the matter.

For the Commission, by the Division of Market Regulation, pursuant to delegated authority.

George A. Fitzsimmons,

Secretary.

[FR Doc. 80-29529 Filed 9-23-80; 8:45 am]

BILLING CODE 8010-01-M

DEPARTMENT OF STATE

[Public Notice CM-8/324]

Advisory Committee on International Investment, Technology, and Development; Meeting

The Department of State will hold a meeting on October 14 of the Working Group on Preparations for the U.N. Conference on New and Renewable Sources of Energy of the Advisory Committee on International Investment, Technology, and Development. The Working Group will meet from 9:30 a.m. to 1:00 p.m. The meeting will be held in Room 1105 of the State Department, 2201 C Street, N.W., Washington, D.C. 20520. The meeting will be open to the public.

The purpose of the meeting will be to review the status of preparations for the U.N. Conference and to consider the role the U.S. private sector can play during the Conference preparatory period.

Requests for further information on the meeting should be directed to Philip T. Lincoln, Jr., Department of State, Office of Investment Affairs, Bureau of Economic and Business Affairs, Washington, D.C. 20520. He may be reached by telephone on (area code 202) 632-2728.

Members of the public wishing to attend the meeting must contact Mr. Lincoln's office in order to arrange entrance to the State Department building.

The Chairman of the working group, will as time permits, entertain oral comments from members of the public attending the meeting.

Dated: September 11, 1980.

Philip T. Lincoln, Jr.,

Executive Secretary.

[FR Doc. 80-29577 Filed 9-23-80; 8:45 am]

BILLING CODE 4710-07-M

TENNESSEE VALLEY AUTHORITY

Consideration of Ratemaking Standards; Extension of Comment Period and Change of Date of Oral Comment Session

AGENCY: Tennessee Valley Authority (TVA).

ACTION: Notice of extension of comment period and change of date of oral comment session.

SUMMARY: Notice of proposed determinations on ratemaking standards being considered by TVA was published in the **Federal Register** August 5, 1980 (45 FR 51975). In that notice it was announced that written comments on the proposed determinations must be received by September 19, 1980, and that an oral comment session would be conducted by the TVA Board on September 30. The purpose of this notice is to extend to October 20, 1980, the period during which written comments received will be assured of consideration and to reschedule the oral comment session to November 10, 1980. This action is being taken to permit additional time for the public to prepare comments on the proposed determinations.

Other details concerning the comment period and public participation are not changed and are set out in the **Federal Register** notice published August 5, 1980.

DATES: Comments in writing must be received by 5 p.m., October 20, 1980, to be assured of being considered. An oral comment session will be conducted on November 10, 1980, beginning at 9:30 a.m.

FOR FURTHER INFORMATION CONTACT: Dawn S. Ford, Tennessee Valley Authority, 400 Commerce Avenue, EPB20, Knoxville, Tennessee 37902 (615) 632-4402.

Dated: September 16, 1980.

W. F. Willis,

General Manager.

[FR Doc. 80-29470 Filed 9-23-80; 8:45 am]

BILLING CODE 8120-01-M

DEPARTMENT OF THE TREASURY

Customs Service

Removal of Prohibition on the Importation of Tuna and Tuna Products From Canada

Correction

In FR Doc. 80-27118 appearing on page 58459 in the issue of Wednesday, September 3, 1980, third column, the Effective Date now reading September 4, should have read "September 3, 1980".

BILLING CODE 1505-01-M

Office of the Secretary

[Supplement to Department Circular, Public Debt Series—No. 28-80]

Treasury Notes; Series W-1982; Interest Rate

September 19, 1980.

The Secretary announced on September 18, 1980, that the interest rate on the notes designated Series W-1982, described in Department Circular—Public Debt Series—No. 28-80, dated September 15, 1980, will be 11⅞ percent. Interest on the notes will be payable at the rate of 11⅞ percent per annum.

Gerald Murphy,

Acting Fiscal Assistant Secretary.

Supplementary Statement

The announcement set forth above does not meet the Department's criteria for significant regulations and, accordingly, may be published without compliance with the Departmental procedures applicable to such regulations.

[FR Doc. 80-29564 Filed 9-23-80; 8:45 am]

BILLING CODE 4810-40-M

Sunshine Act Meetings

Federal Register
Vol. 45, No. 187
Wednesday, September 24, 1980

This section of the FEDERAL REGISTER contains notices of meetings published under the "Government in the Sunshine Act" (Pub. L. 94-409) 5 U.S.C. 552b(e)(3).

CONTENTS

	Items
Commodity Futures Trading Commission	1
Equal Employment Opportunity Commission	2
Federal Energy Regulatory Commission	3
International Trade Commission	4
National Labor Relations Board	5
National Mediation Board	6
Nuclear Regulatory Commission	7
Occupational Safety and Health Review Commission	8–10

1

COMMODITY FUTURES TRADING COMMISSION.

TIME AND DATE: 11 a.m., Friday, October 3, 1980.

PLACE: 2033 K Street NW., Washington, D.C., eighth floor conference room.

STATUS: Closed.

MATTERS TO BE CONSIDERED: Surveillance briefing.

CONTACT PERSON FOR MORE INFORMATION: Jane Stuckey, 254–6314.

[S-1755-80 Filed 9-22-80; 9:07 am]

BILLING CODE 6351-01-M

2

EQUAL EMPLOYMENT OPPORTUNITY COMMISSION.

"FEDERAL REGISTER" CITATION OF PREVIOUS ANNOUNCEMENT: S–1739–80.

PREVIOUSLY ANNOUNCED TIME AND DATE OF MEETING: 9:30 a.m. (eastern time), Tuesday, September 23, 1980.

CHANGE IN THE MEETING: The following matter was added to the agenda for the Closed portion of the meeting:

Labor Department's Proposed Regulations.

A majority of the entire membership of the Commission determined by recorded vote that the business of the commission required this change and that no earlier announcement was possible.

In favor of change:

Eleanor Holmes Norton, Chair.
Daniel E. Leach, Vice Chair.
Ethel Bent Walsh, Commissioner.
Armando M. Rodriguez, commissioner.

CONTACT PERSON FOR MORE INFORMATION: Treva I. McCall, Acting Officer Executive Secretariat, at (202) 634–6748.

This Notice Issued September 19, 1980.

[S-1762-80 Filed 9-22-80; 2:45 pm]

BILLING CODE 6750-06-M

3

FEDERAL ENERGY REGULATORY COMMISSION.

"FEDERAL REGISTER" CITATION OF PREVIOUS ANNOUNCEMENT: 45 FR 62603, September 19, 1980.

PREVIOUSLY ANNOUNCED TIME AND DATE OF MEETING: 10 a.m., September 24, 1980.

CHANGE IN MEETING: The following items have been added:

Item Number, Docket Number, and Company

M–11(A)—RM80–14, Final Regulations Under Section 105 and 106(b) of the Natural Gas Policy Act of 1978.
M–11(B)—RM80–21, Regulations Under Section 110, 105 and 106(b) of the Natural Gas Policy Act of 1978.
M–11(C)—SA80–90, American Petrofina Co. of Texas, *et al.*
RP–4—OR78–5, Northville Dock Pipe Line Corp. and Consolidated Petroleum Terminal, Inc.
RP–5—RP–74–86 and RP76–97, Gulf Energy & Development Corp.
CP–4—RP–75–79 (Phase II), Lehigh Portland Cement Company v. Florida Gas Transmission Co.
CP–44, Abitibi Corp. V. Florida Gas Transmission Co.
CP–5—CP78–253 and CP78–254, Northwest Pipeline Corp.
CI80–32, IGC Production Corp.

Lois D. Cashell,
Acting Secretary.

[S-1763-80 Filed 9-22-80; 2:45 pm]

BILLING CODE 6450-85-M

4

[USITC SE–80–45]

INTERNATIONAL TRADE COMMISSION.

TIME AND DATE: 10 a.m., Tuesday, September 30, 1980.

PLACE: Room 117, 701 E Street NW., Washington, D.C. 20436.

STATUS: Open to the public.

MATTERS TO BE CONSIDERED:

1. Agenda.
2. Minutes.
3. Ratifications.
4. Petitions and complaints, if necessary.
5. Investigation 731–TA–39 (Asphalt Shingles from Canada)—briefing and vote.
6. Any items left over from previous agenda.

CONTACT PERSON FOR MORE INFORMATION: Kenneth R. Mason, Secretary, (202) 523–0161.

[S-1756-80 Filed 9-22-80; 9:07 am]

BILLING CODE 7020-02-M

5

NATIONAL LABOR RELATIONS BOARD.

TIME AND DATE: 10 a.m., Wednesday, September 24, 1980.

PLACE: Board conference room, sixth floor, 1717 Pennsylvania Avenue NW., Washington, D.C. 20570.

STATUS: Closed to public observation pursuant to 5 U.S.C. Section 552b(c)(2) (internal personnel rules and practices) and (c)(6) (personal information where disclosure would constitute a clearly unwarranted invasion of personal privacy).

MATTERS TO BE CONSIDERED: Personnel-related matters.

CONTACT PERSON FOR MORE INFORMATION: Robert Volger, Acting Executive Secretary, Washington, D.C. 20570; telephone: (202) 254–9430.

Dated, Washington, D.C., September 22, 1980.

By direction of the Board.

Robert Volger,
Acting Executive Secretary, National Labor Relations Board.

[S-1757-80 Filed 9-22-80; 12:39 pm]

BILLING CODE 7545-01-M

6

NATIONAL MEDIATION BOARD.

TIME AND DATE: 2 p.m., Wednesday, October 1, 1980.

PLACE: Board hearing room, Eighth floor, 1425 K Street NW., Washington, D.C.

STATUS: Open.

MATTERS TO BE CONSIDERED:

(1) Ratification of Board actions taken by notation voting during the month of September, 1980.

(2) Preliminary staff draft on NMB use of subpoenas.

(3) Other priority matters which may come before the Board for which notice will be given at the earliest practicable time.

SUPPLEMENTARY INFORMATION: Copies of the monthly report of the Board's notation voting actions will be available

from the Executive Secretary's office following the meeting.

CONTACT PERSON FOR MORE INFORMATION: Mr. Rowland K. Quinn, Jr., Executive Secretary; Telephone (202) 523–5920.

Dated: September 22, 1980.

[S–1758–80 Filed 9–22–80; 1:42 pm]

BILLING CODE 7550–01–M

7

NUCLEAR REGULATORY COMMISSION.

TIME AND DATE: 10 a.m., Thursday, September 25, 1980.

PLACE: Commissioners conference room, 1717 H Street NW., Washington, D.C.

STATUS: Open/closed.

MATTERS TO BE CONSIDERED:

10 a.m.

1. Time Reserved for Discussion of Management-Organization and Internal Personnel Matters (approximately 2 hours, closed—Exemption 2 and 6).

2 p.m.

1. Affirmation Session (approximately 10 minutes, public meeting).

a. Implementation of Commission Decision in Part 25.

b. Appointment of ACRS Member.

2:15 p.m.

1. Briefing by Executive Branch on Export Matter (tentative) (approximately 1½ hours), closed—Exemption 1).

CONTACT PERSON FOR MORE INFORMATION: Walter Magee (202) 634–1410.

AUTOMATIC TELEPHONE ANSWERING SERVICE FOR SCHEDULE UPDATE: (202) 634–1498.

Those planning to attend a meeting should reverify the status on the day of the meeting.

Dated: September 18, 1980.

Walter Magee,

Office of the Secretary.

[S–1764–80 Filed 9–22–80; 2:57 pm]

BILLING CODE 7590–01–M

8

OCCUPATIONAL SAFETY AND HEALTH REVIEW COMMISSION.

TIME AND DATE: 10 a.m., on October 9, 1980.

PLACE: Room 1101, 1825 K Street NW., Washington, D.C.

STATUS: Because of the subject matter, it is likely that this meeting will be closed.

MATTERS TO BE CONSIDERED: Discussion of specific cases in the Commission adjudicative process.

CONTACT PERSON FOR MORE INFORMATION: Ms. Patricia Bausell, (202) 634–4015.

Dated: September 22, 1980.

[S–1759–80 Filed 9–22–80; 1:42 pm]

BILLING CODE 7600–01–M

9

OCCUPATIONAL SAFETY AND HEALTH REVIEW COMMISSION.

TIME AND DATE: 10 a.m. on October 16, 1980.

PLACE: Room 1101, 1825 K Street NW., Washington, D.C.

STATUS: Because of the subject matter, it is likely that this meeting will be closed.

MATTERS TO BE CONSIDERED: Discussion of specific cases in the Commission adjudicative process.

CONTACT PERSON FOR MORE INFORMATION: Ms. Patricia Bausell (202) 634–4015.

Dated: September 22, 1980.

[S–1760–80 Filed 9–22–80 1:43 am]

BILLING CODE 7400–01–M

10

OCCUPATIONAL SAFETY AND HEALTH REVIEW COMMISSION.

TIME AND DATE: 10 a.m. on October 30, 1980.

PLACE: Room 1101, 1825 K Street NW., Washington, D.C.

STATUS: Because of the subject matter, it is likely that this meeting will be closed.

MATTERS TO BE CONSIDERED: Discussion of specific cases in the Commission adjudicative process.

CONTACT PERSON FOR MORE INFORMATION: Ms. Patricia Bausell (202) 634–4015.

Dated: September 22, 1980.

[S–1761–80 Filed 9–22–80; 1:43 pm]

BILLING CODE 7400–01–M

federal register

Wednesday
September 24, 1980

Part II

Department of Energy

Office of Conservation and Solar Energy

Residential Conservation Service Program

DEPARTMENT OF ENERGY

Office of Conservation and Solar Energy

10 CFR Part 456

[Docket No. CSA-RM-79-101]

Residential Conservation Service Program

AGENCY: Department of Energy.

ACTION: Final and interim rules.

SUMMARY: The Department of Energy (DOE) is implementing the Residential Conservation Service (RCS) Program pursuant to Title II, Part 1 of the National Energy Conservation Policy Act (NECPA) (Pub. L. 95-619, 92 Stat. 3206, *et seq.*). The purpose of the program is to encourage the installation of energy conservation measures and renewable resource measures in existing houses by residential customers of larger gas and electric utilities and home heating suppliers.

On November 7, 1979, DOE issued a Final Rule for the RCS program (44 FR 64602). Included in the Final Rule were several reserved sections.

A Proposed Rule that filled in these reserved sections and proposed additional sections was published on December 21, 1979 (44 FR 75956) and is made final here. References to "the Final Rule" will refer to the rule published today unless otherwise specified.

This Final Rule establishes requirements for certification of installers and inspectors of flue opening modifications (vent dampers) in gas-furnaces; installers and inspectors of automatic intermittent pilot ignition devices in gas-fired furnaces; installers and inspectors of wind energy devices, and installers and inspectors of active solar space heating systems, solar domestic hot water systems, and combined active solar space heating and solar domestic hot systems. The Final Rule also sets out standards for thermosiphon hot water heaters, standards for solar swimming pool heaters; loading requirements for installation of loose fill thermal insulation; installation standards for caulks and sealants; material standards for pipe insulation; material and installation standards for flue opening modifications (vent dampers); standards for wind energy devices; material standards for automatic intermittent pilot ignition devices; and interim installation standards for automatic intermittent pilot ignition devices.

EFFECTIVE DATE: Section 456.915 shall be effective on an interim basis on October 24, 1980. (see Section III-K for an explanation of the interim basis for this provision); and the remainder of the provisions of this rulemaking shall be effective on October 24, 1980.

ADDRESSES: All reports in this Final Rule are available for inspection in the Department of Energy Reading Room, Room 5B-180, Forrestal Building, 1000 Independence Avenue, S.W., Washington, D.C., between the hours of 8:00 a.m and 4:30 p.m., Monday through Friday.

FOR FURTHER INFORMATION CONTACT:
James R. Tanck, Acting Director, Building Conservation Services Division, Department of Energy, Room GH-068, 1000 Independence Avenue SW., Washington, D.C. 20585, (202) 252-9161.
Susan Caplan, Office of General Counsel, Department of Energy, Room 1E-254, 1000 Independence Avenue SW., Washington, D.C. 20585, (202) 252-9513.

SUPPLEMENTARY INFORMATION:

I. Introduction.
II. Qualification Procedures.
III. Standards.
IV. Regulatory Analysis and Urban Impact Assessment.
V. Environmental Impact Statement.
VI. Consultation with Other Federal Agencies.
VII. Contractor Contributors to the Rulemaking.

I. Introduction

The Department of Energy (DOE) is amending Part 456 of Chapter II of Title 10 CFR to complete the rulemaking requirements for Title II, Part 1 of the National Conservation Policy Act (NECPA) (Public Law 95-619). Several areas in the Final Rule established November 7, 1979, (44 FR 64602) were reserved pending further study and investigation. These reserved sections were proposed December 13, 1979, (44 FR 75956, December 21, 1979), and most are finalized here. Included herein are qualification procedures for installers and inspectors of wind energy devices and furnace retrofit devices. Also included are installation standards for caulks/sealants, vent dampers, automatic intermittent pilot ignition devices (IID's), wind energy devices and solar devices. This also includes material standards for wind and solar devices.

II. Qualification Procedures

The Proposed Rule contained qualification procedures for installers and inspectors of:

- Vent dampers;
- Automatic intermittent pilot ignition devices (IID's);
- Wind energy devices;
- Active solar space heating systems, solar domestic hot water systems, and combined active solar space heating and solar domestic hot water systems.

Few people commented on the substance of the qualification procedures for installers and inspectors of furnace retrofit devices. The American Gas Association (AGA) stated that "* * * DOE should, at a minimum, develop training and testing procedures so that all jurisdictions will be able to judge qualifications on an equitable basis." As part of the technical assistance to those implementing the RCS program, DOE will provide training materials for installers and inspectors of vent dampers and IID's. Training materials include student manuals, teaching aids, and tests, based on the AGA "Manual for Field Service and Adjustment of Gas Space Heating Equipment."

Several utilities requested that DOE specify that a utility cannot be designated as an inspector for furnace devices which operate with a fuel other than that supplied by the utility. These comments were the subject of an earlier rulemaking on the Residential Conservation Service program (see **Federal Register,** November 7, 1979) and are therefore not addressed here. The RCS Final Rule published November 7, 1979, gave the State lead agency responsibility for determining who should conduct inspections of all measures. Utilities and others who have an interest in this issue are encouraged to work with the State lead agency in finding an equitable way of resolving these concerns.

Edison Electric Institute (EEI) submitted to the public docket the results of a survey they conducted of 35 States. EEI found that:

- Thirteen States do not require local code inspections of automatic vent dampers;
- Thirteen States do not require local code inspection of IID's;
- Eighteen States do not require local code inspection of wind energy devices;
- Fifteen States do not require local code inspection of solar domestic hot water systems;
- Fourteen States do not require local code inspection of active solar space heating systems;
- Sixteen States do not require local code inspection of combined active solar space heating/domestic hot water systems.

EEI also suggested that DOE require a local code inspection where it is available "to eliminate or preclude the possibility of dual or multiple post-installation inspections of these

devices." Again this comment is outside the scope to this rulemaking. DOE anticipates that State lead agencies will consider using local code inspection services when practical.

Nine southern gas utilities suggested that all requirements relating to vent dampers and IID's be deleted from the program. They cited evidence from AGA's Space Heating Efficiency Improvement Program (SHEIP) which showed these devices to be not cost effective in warmer climates. They also expressed concern about several safety related items. Specifically:

- Variations in burner, wiring and control configurations make field installation difficult and expensive;
- Field installation of these devices require installation skills and quality control beyond what can reasonably be expected;
- Retrofit installations may void furnace warranties.

DOE agrees with the utilities that vent dampers and IID's may not be cost effective in warmer climates because of the generally smaller seasonal fuel consumption per house. The cost effectiveness of a particular damper installation is dependent upon many things including the type, size, and tightness of house construction; the type and design of the damper; type and size of the furnace; type and size of the venting system; location of the furnace within the house; presence of a gas (or oil) fired water heater or other vented appliance in the same room as the furnace; and local climatic conditions including wind effects. Although DOE does not plan to remove vent dampers and IID's from the list of RCS program measures, we will consider evaluating State-specific applicability criteria described in the State Plan for furnace retrofit devices. Applicability criteria may be such that an auditor can determine in advance whether or not a furnace retrofit device is likely to be cost effective; a State may not, however, simply exclude all vent dampers and IID's from the program. Because there are some homes in all climate regions for which vent dampers and IID's are cost effective, the applicability criteria may not exclude these homes.

Utility concerns about safety include installation problems that may be encountered due to the wide variety of burners, and of wiring and control configurations. These are addressed in § 456.814. The installation skills required of installers and inspectors in § 456.314 should reduce the safety problems addressed by utilities.

Another commenter suggested that it was not necessary for an installer of thermal vent dampers to be instructed in circuitry, electrical vent dampers, schematic diagrams, electrical components, and related areas. DOE agrees that an installer of thermal vent damper does not need to know how to install electrical or mechanical vent dampers; however, he must be familiar with electrical circuitry and components and be able to conduct a complete safety inspection of the existing furnace before commencing to install the thermal damper.

Some vent damper manufacturers felt the qualification criteria for installers were too comprehensive. DOE reevaluated the proposed criteria and determined they were not unreasonable. If DOE, through utility audits, is going to encourage the installation of vent dampers and IID's, we must be assured that there are people available who are capable of conducting safe and effective installations. Qualifying installers through comprehensive training and/or testing appears the most workable approach.

Several State energy offices and utilities expressed the opinion that inspection of wind energy devices was too difficult for State or utility personnel to undertake. They noted more specifically that the wind standards and test requirements are too detailed and complex for States to implement.

As noted in the Preamble to the Proposed Rule of December 21, 1979, DOE intends to provide, as part of its technical assistance to the States, a model qualification program for inspectors of wind energy devices. This technical assistance should facilitate training and qualification of personnel to conduct post-installation inspections of wind energy devices. However, DOE believes that even without this assistance, inspection of wind devices need not be particularly burdensome or difficult to accomplish.

DOE agrees with a commenter's view that installers and inspectors of wind devices need not be proficient in or have a complete working knowledge of the intricacies of the test requirements of the standard. However, DOE believes that it remains beneficial for installers to have fundamental understanding of the tests, their purposes, the significance of results with respect to system sizing and operation, and where the test data may be obtained.

Inspectors should possess a general knowledge of test requirements and purposes in order to most effectively meet their responsibilities. Accordingly, DOE has retained the requirements of the Proposed Rule.

A number of commenters requested that DOE designate a specific organization to be responsible for conducting the wind energy devices post installation inspections, and made suggestions as to the parties most suitable to perform this function. The RCS regulations assign to each State the responsibility for designating the agencies or organizations that are to conduct the post-installation inspections of wind energy devices. DOE anticipates that each State will make this determination and assignment in the manner consistent with the State's overall program of inspection for construction and installation related to residential properties and electrical systems, and finds no compelling rationale for limiting State flexibility with respect to this requirement.

Similar comments and suggestions were received regarding designation of parties most suitable for performing inspections of solar domestic hot water systems, active solar space heating systems, and combined active space heating and solar domestic hot water systems. As discussed above, DOE can find no compelling reason to make such a designation.

There were no other substantive comments received addressing the other requirements for inspectors and installers, of these renewable resource measures nor were there any comments questioning the necessity for these qualification procedures. Therefore, DOE has retained the language of the Proposed Rule for § 456.314 (c) and (d).

III. Standards

A. Background

NECPA requires the Secretary to develop material and installation standards necessary to ensure general safety and effectiveness of the installed material. Included herein are renewable resource material and installation standards for thermosiphon hot water heaters, swimming pool heaters, and wind systems. Also included are energy conservation material standards for pipe insulation, and additonal requirements for material standards for vent dampers and IID's, and energy conservation installation standards for caulks and sealants, for vent dampers and for IID's for gas-fired systems, and loading requirements for loose fill insulation.

B. Thermosiphon Hot Water Heaters

No significant comments were submitted on thermosiphon hot water heaters. The standard is therefore finalized as proposed.

C. Replacement Swimming Pool Heaters

No significant comments were submitted on replacement swimming

pool heaters. The standard is therefore finalized as proposed.

D. Wind Systems

This standard has been developed by DOE exclusively for use within the RCS Program. DOE has continually had a policy of adopting voluntary consensus standards developed by the private sector for use within its programs. However, no such standard exists for residential Small Wind Energy Conversion Systems (SWECS) nor could one be prepared in time to meet the legislative deadlines of the RCS program. This standard is intended to be used as an interim standard until such time as a voluntary consensus standard is developed and accepted by DOE as sufficient for purposes of the RCS Program. Wind energy systems cannot be incorporated as an RCS program measure unless an adequate standard exists.

The goal of the interim standard is to provide for safe and effective operation of residential SWECS, without imposing restrictive or costly requirements which could significantly disrupt industry growth and competition. DOE strongly encourages the small, but developing, wind industry to prepare consensus standards. DOE intends to review appropriate consensus standards, as they become available, for incorporation into the RCS program.

DOE received comments from numerous and varied sources on the proposed wind energy standards (§ 456.705, December 21, 1979). The commentors provided useful, and sometimes detailed, information on elements of the proposed rule. Most comments dealt with technical issues and additions or expansion of requirements. DOE has completed a detailed analysis of those comments with the assistance of the technical staff of the Wind Systems Program, Rocky Flats Plant, the Solar Energy Research Institute and various consultants. A detailed listing of the technical comments and the responses has been documented by the Rocky Flats Plant and is available at the DOE Reading Room. Some illustrative examples follow:

In several cases commentors pointed out errors in the proposed rules. These suggested corrections have been made. For example, the requirement for grounding SWECS (proposed § 456.705 (g)(2)(ii); present § 456.705(f)(2)(vi)) has been altered in response to the comment that the grounding of SWECS is not always appropriate or safe and the formula in proposed § 456.705(f)(5) has been deleted and a definition of "survival wind speed" has been added (present § 456.705(b)(32)).

Suggestions for additions or expansion of the regulation were made by several parties. Many of the suggested additions or expansions of the requirement were incorporated into the standard. For example, the utility is now required to keep copies of inspection reports for five years rather than two years (proposed § 456.705(i)(B); present § 456.705(h)(2)), some additional information must be included on the SWECS label (proposed § 456.705(j)(1)(i)–(vi); present § 456.705(i)(2)(i)–(viii)) and the wind speed testing range has been increased (proposed § 456.705(k)(6)(i); present § 456.705(j)(6)(i)). In some cases, the suggestions were not followed because DOE felt they were inappropriate for a standard, but should be considered elsewhere. Other suggestions were not applicable to the limited scope of the standard.

In addition, numerous parties suggested deletions or reductions in requirements. Many of the comments were on the use of the Raleigh distribution and the method of bins. (The method of bins noted here is a specific analysis technique for accumulating performance data for wind energy systems. See Sandia Laboratories Report SAND 77–1375–1978, "Performance Evaluation of Wind Energy Conservation Systems Using the Method of Bins.") Though the Raleigh distribution does not provide the most representative measure of wind for the whole country, it has been included in the standard in order to provide a credible standard rating system for comparison purposes (proposed § 456.705(b)(17); present § 456.705(b)(20)).

The commenters referred to several potential problems with the method of bins and, in some cases, recommended that other methods be used. DOE has retained the method of bins as the one accepted method (§ 456.705(b)(13)) because it is considered the most accurate and because it is important to establish the uniformity of analysis provided by a single method. The reference to the method-of-bins (See Appendix II) may be obtained from the National Technical Information Service and will be available in the DOE reading room.

Among the issues with policy content is that of the scope of wind standard. DOE received a number of comments from the wind industry, state energy offices and utilities regarding the scope of standards (§ 456.705(a)).

Many commentors requested expansion of the scope of standards, from electric interconnected SWECS, to include additional types of wind energy devices. Several commentors argued that the proposed scope implies a significant deviation from the definition in the Final Rule of November 7, 1979. Another commentor observed that all forms of wind energy devices contribute to energy savings. Several commentors expressed the concern that, as proposed, the scope of standards ignores potentially economic applications employing thermal delivery (such as for direct heating of water for space heating and domestic water) and mechanical delivery (such as for pumping water) as well as electric non-interconnected uses.

In response to these comments, DOE has modified the scope of standards to include electric non-interconnected wind energy devices. The standards now cover all forms of electrical energy development, with the exception of wind energy systems employing battery storage. This exclusion of battery storage is a result of several considerations including those relative to standards applicable to residential battery usage, and the uncertainty concerning generic cost and cost-effectiveness of wind systems employing battery storage.

DOE acknowledges the arguments that the Final Rule definition of wind energy devices included all forms of energy producing systems. However, DOE believes there is not sufficient evidence, at this time, to indicate a nationwide, commercially-established use of non-electric wind systems (such as thermal and mechanical delivery mechanisms) that are potentially cost effective for residential purposes.

It is further noted, DOE used only electric generating wind devices in developing the cost effective zones where wind is a designated program measure in the Final Rule of November 7. DOE acknowledges that electric non-interconnected systems, considered in the analysis for the Final Rule, should be addressed in the final standard and has modified section 456.705(a) in response to these comments.

DOE intends to continue its assessment of the energy conservation impact and cost-effectiveness, as well as commercial readiness, of non-electric wind energy systems for residential use, as well as electric systems employing batteries, and will propose changes to the final standards at the time such assessment warrant changes. DOE wishes to note that individual States can propose the addition of other potentially cost effective wind energy devices as State added measures within their State Plan. Finally, DOE believes that the standards, as promulgated herein, will

assure the safe and effective operation of the majority of cost effective residential wind energy uses.

The standard proposed required performance characteristics to be determined as a result of testing by the manufacturer or a separate testing organization designated by the manufacturer (proposed § 456.705(e); present § 456.705(d) *Performance*). In the Preamble to the Proposed Rules, DOE solicited comments in response to the question: Are reasonable alternatives to permitting manufacturer certification available? DOE noted there that in other areas of standards development, DOE has made known its preference for third party certification.

Only one response to that question was received. A State Energy Office observed that wind systems self-certification by the manufacturer is inappropriate and that third party certification is necessary to insure that there is no conflict of interest. At the present time, it was noted, the pressures on these companies to generate sales could lead to conflict of interest if they are expected to self certify their own products. The State Energy Office also requested that each SWECS model be tested at Rocky Flats before the model is eligible for inclusion within a State RCS Program.

DOE has carefully considered the suggestions and has elected to retain, for the present, the dependence on manufacturer testing, or testing by an organization designated by the manufacturer. This has been done in recognition that DOE has no basis for questioning the integrity of the SWECS manufacturers. Moreover, concerning the recommendation for all wind systems to be tested at Rocky Flats, DOE has previously expressed its preference for third party, independent testing and certification. No such capability currently exists for SWECS within the private sector. DOE is concerned that to rely so heavily on Rocky Flats at this time would prove to be counter-productive to the development of such capability within the private sector.

DOE received numerous comments on the setback limitation of one tower height plus one rotor radius from a property line or a right-of-way for electrical transmission or distribution lines (proposed § 456.705(g)(1)(i)). The great majority of the commentors felt that this setback requirement was too severe, and would restrict the use of wind devices under RCS for the majority of middle income housing and older neighborhoods. Several commentors questioned the basis on which the setback requirement was established, stating that there was no substantial empirical basis for the kind of tower failure provided for in the proposed setback requirement.

One commentor requested an increase in the setback requirement and two commentors voiced a strong concern for the electrocution potential inherent in contact between a falling tower and an electric power distribution line. Responding to this same concern, a commentor suggested reduced setback requirements of at least one rotor radius plus five feet from the property line or right-of-way for overhead electric distribution or transmission lines.

Several commentors suggested that DOE delete the setback requirement; and instead, require manufacturers to demonstrate the structural capacity of their systems to be adequate to withstand the most severe forces expected, with an acceptable factor of safety.

Many commentors suggested that a setback provision was inappropriate in the standard and should be left within the domain of local codes and ordinances. One commentor requested DOE to remain silent on the issue of setback until industry consensus standards are finalized.

DOE believes that provisions for setback are appropriate for inclusion in the standard in order to assure non-interference with neighboring and utility property and to assure safety of the wind device owner and others. DOE has sought a substantial empirical basis with respect to tower failure and could find no such basis. The proposed setback requirement was predicated on the most severe potential tower failure, i.e., a tower falling from its base; and reflected the DOE concern to err on the side of safety assurance. Since it could find no substantial evidence that a wind device tower, installed according to the other provisions of this standard, will fall from its base in the manner provided for in the proposed setback, DOE has changed this provision in the final setback requirement. (Present § 456.705 (f)(1)).

In response to comments regarding the restrictive nature of the proposed setback, DOE investigated further the extent to which local codes and ordinances contain setback provisions appropriate to the SWECS application. Based on a sample of local codes and ordinances in urban and rural regions of eight States, DOE concludes that very few local setback provisions deal expressly with wind devices. Setback ordinances are normally established to provide access and assure non-interference with neighboring property or utility service lines, and are not primarily concerned with safety. The sample data revealed that local setback requirements vary greatly within a local authority and from one locality to another. Because of these varations and limitations, DOE believes that use of local property setback codes and ordinances alone, can not provide a basis for assurance of safety. The provisions of the standard are intended to fulfill this need where local codes are not specific to wind energy devices.

§456.705(g)(1)(iii)(B) of the proposed standard established that the local utility would be responsible for determining that existing as well as new utility-owned protection devices would ensure safe utility operation with the additional generating capability created by the SWECS. One commentor questioned who should be required to pay for new utility system protective devices, if such are needed.

Relative to proposed § 456.705(g)(1)(iii)(C), three commentors raised the issue of responsibility for damage to the utility system, to the user, or to other customers, resulting from an interconnected wind system. Recommendations included: the SWECS owner should be responsible for any damage to the utility system; the utility should not be liable for any damage caused by the SWECS interconnect; the owner is liable if the utility is not informed of the interconnect. Commentors requested a specific assignment of such responsibility in the Final Standard.

With regard to utility required electrical tests prior to interconnection, called for in proposed § 456.705(g)(1)(iii)(G), several commentors requested clarification of who should bear the cost of such electrical tests. Commentor's opinions varied, some proposing the customer should pay for the tests and some proposing the utility pay for such tests.

In response to these several sets of comments, DOE acknowledges that the issues of payment for new utility system protection devices and the assignment of liability for damage to a utility or its customers as a result of a SWECS interconnection, are not resolved in the Rule. DOE believes that these are issues to be resolved by the appropriate State utility regulatory authority in consultation with the State RCS Lead Agency.

Since DOE believes that questions of cost to comply with utility requirements for interconnection are an issue to be resolved by the appropriate State agencies, the words "at a reasonable expense" have been removed from the final standard in order to clarify this position.

E. Material Standard for Urea-Formaldehyde (U–F) Foam Insulation

We have not yet finalized § 456.810, "Standard for urea-formaldehyde foamed-in-place insulation" because our consultation with the Consumer Product Safety Commission (CPSC) is still under way. DOE will make a determination on the issuance of this standard and publish regulations reflecting that determination shortly.

F. Material Standards for Pipe Insulation

Only two comments were received on pipe insulation. One commenter stated that the standard was not necessary. DOE has determined, however, that standards are necessary for all insulation materials, including insulation used on pipes. The other suggested that the requirement for a 25-flame spread on exterior facings of organic cellular pipe covering be deleted since there are no separate facings and since it is not a requirement of HH–I–573B. DOE agrees that there should not be a separate requirement for exterior facings, and that the requirement for flame spread rating of 25 may be excessive. Because the area covered by pipe insulation is so much less than that which covers ducts, water heaters, ceilings, walls, or floors, the fire safety requirements need not be as stringent. Accordingly, the Final Rule requires a flame spread rating of 150 for pipe insulation in its end-use configuration when tested in accordance with ASTM E–84.

G. Additional Requirements for Vent Dampers and IID's

The Proposed Rule required an electrically operated vent damper or a thermal vent damper with electrical connections to be installed only where the *specific* wiring diagram supplied by the vent damper manufacturers showed the device to be compatible with the appliance. If wiring or interconnection diagrams duplicating the heating system were not supplied by the vent damper manufacturer, the installation should not be attempted.

Four commenters supported the requirement that installations not be permitted unless a schematic diagram is available. One commenter said it may not be possible to provide a wiring diagram for some furnaces because of their age. One commenter stated that the schematic diagram requirement was unworkable and unnecessary and would limit the number of dampers installed. One damper manufacturer reported that seven wiring diagrams would cover 95 percent of potential applications for their dampers. Three commenters objected to DOE's requiring a schematic to be provided by thermal damper manufacturers. One commenter recommended that suppliers of mechanical dampers supply specific interconnection diagrams showing how their product is interconnected with the motive force and appliance control circuits. Two commenters opposing the requirement for schematic diagrams said that the competent installer would not require specific wiring diagrams. One commenter said a multitude of control circuits exist in the field which can only be dealt with by supplying typical diagrams.

As a result of these comments appropriate revisions have been made to the wording of the Final Rule in order to clarify DOE's intentions. Damper manufacturers are not required to supply *specific* interconnection or wiring diagrams for each and every furnace model. Instead, the damper manufacturer is only required to furnish a wiring diagram which is representative of the type of furnace wiring encountered by the installer in a particular damper installation. If none of the representative diagrams furnished by the damper manufacturers match the actual furnace wiring found by the installer, the damper is not to be installed.

This prohibition against installing dampers without matching wiring diagrams is not applicable to those thermal or mechanical dampers which have no electrical tie-ins. Manufacturers of mechanical dampers must supply a diagram showing how the damper ties into the motive force and appliance control system.

One commenter pointed out that DOE had mistakenly referenced ANSI Z21.20–1979 for the IID standard. Because the standard applies only to OEM (original equipment manufacturer) devices, the standard is not applicable in the context in which it was used. DOE acknowledges the mistake and has changed the reference to the proposed ANSI standard for "Automatic Intermittent Pilot Ignition Systems for Field Installation" as is referenced in § 456.915 for installation standards. The proposed ANSI standard is based primarily on the present ANSI IID standard for OEM devices (Z21.20–1979), with several specifications added to provide for the design and installation differences of these field installed systems including:

(1) a listing of the components required to be part of each system;

(2) a stipulation that when the system is connected to the controls of the appliance on which it is installed, it shall not adversely affect the operation of the appliance;

(3) specifications for proving the pilot before main burner gas flow is allowed and for automatic shut off of both main and pilot burner gas when flow is allowed and for automatic shut off of both main and pilot burner gas when the heating cycle is completed;

(4) specifications for designating wire colors in electrical diagrams;

(5) a homeowner's information manual including operating instructions, information that the appliance has been so modified and recommendations to call a qualified service person for repairs and to have an annual inspection; and

(6) two exhibits, one outlining procedures for the safety inspection of an existing appliance installation and the other for installing the IID.

The same commenter also suggested that DOE reference the October 1979 draft of the proposed ANSI standard rather than the September 1979 draft since only editorial changes were made. After reviewing the two drafts, DOE accepted the suggestion.

H. Loading Requirements for Installation of Loose Fill Thermal Insulation

Eight commenters claimed they had never experienced a loading problem, that the proposed regulation was unnecessary, and that it was discriminatory. U.S. Gypsum recommended increasing the suggested loads to 2.2 psf for all gypsum board configurations. This, they stated, was not based on product research or testing, but simply on what they knew to be acceptable.

DOE has deleted the table of maximum suggested loads, although the provision relating to structural damage has been retained. The table was not a requirement in itself and was included only as guidance in determining if loads on ceiling materials might be exceeded. DOE recognizes that the values in the table were unnecessarily conservative and has deleted them to avoid confusion since many interpreted the values as a mandatory requirement.

However, DOE also recognizes that separation of finish materials from wall studs sometimes occurs during the blowing process. Therefore the provision (minus the explanatory note) remains.

I. Interim Installation Standard for Urea-Formaldehyde Foam Insulation

We have not yet finalized § 456.909, "Standard practice for the installation of urea-formaldehyde foamed-in-place insulation" because our consultation

with the Consumer Product Safety Commission (CPSC) is still underway. DOE will make a determination on the issuance of this standard and publish regulations reflecting that determination shortly.

J. Installation Standard for Vent Dampers on Gas-Fired Systems

One commenter stated that DOE should develop standards which all manufacturers must meet. Other commenters urged that DOE refrain from such action and instead work within the existing standards making process. The American Damper Manufacturers Association (ADMA) said that ANSI and Underwriters Laboratories, Inc. (UL) have already issued damper standards after many years of effort. They claimed these standards have been used to install over 500,000 dampers in the past 2 years without any known accidents. ADMA also said that DOE should not develop additional regulations unless it can be shown that the existing regulations are inadequate.

Another commenter stated that if there are shortcomings to the existing standards, ANSI should be allowed reasonable time to take corrective action. Another commenter said that DOE's extension of the standards (beyond the schematic diagram requirement which is desirable) contradicts DOE's policy of relying upon voluntary consensus standards. Moreover, consensus standards are easier to update and modify than DOE standards. One commenter noted that the damper standard Z21.66 does not contain installation requirements.

DOE concurs that issuance of standards for dampers or other measures is not an appropriate role for DOE so long as there are in existence adequate industry standards. Standards for dampers for gas-fired furnaces and boilers have been issued by the American National Standards Committee Z21. The fact that DOE has adopted these material standards as the basis for the material standard in § 456.814 is an indication of the Department's high regard for the quality of the ANSI standard. This rulemaking should not be interpreted as a rejection of the voluntary standards process.

There were two considerations taken into account. First, the bulk of the requirements set forth by DOE in the Proposed Rule deal with installation procedures. At present, no industry standard known to us sets forth firm and complete requirements governing installation of electrical, mechanical, or thermal dampers.

A suggested installation procedure is included as an exhibit at the back of each of the ANSI standards Z21.66, Z21.67 and Z21.68 covering electrical, mechanical and thermal dampers respectively. In each case the procedure described "is intended only as a guide to aid in determining that an appliance is properly installed." The damper installation procedure included as Appendix 1F of the National Fuel Gas Code is identified as "recommended" and it contains a notice that the procedure is "informative and is not part of the code."

DOE is not issuing an installation standard to compete with voluntary industry standards. In the Final Rule mandatory and complete installation requirements are being included since such requirements were not found in current voluntary industry standards.

Second, the process of revising voluntary standards is not a swift one. Deficiencies in a standard which come to light today may not actually be dealt with until after the lapse of many months. A year or more may sometimes elapse before the necessary revisions to the standard are finally approved. Rather than leaving reported deficiencies to be handled through the voluntary standards process, DOE elected to deal with them in this Final Rule. When appropriate action is taken to correct these deficiencies by the standards organization, prompt consideration will be given to revising the Final Rule.

In the Proposed Rule, DOE described 15 issues involving the scope or content of the installation standard. In nine of the 15 issues, comments were specifically requested. A summary of each of these issues, the comments received, and DOE's response are noted below:

(1) *Exclusion of Steam Boilers.* The proposed standard was applicable to field installation of dampers in gas-fired, forced-air and gravity furnaces and low-pressure not water boilers. Paragraph 456.914 (b)(25) and (d)(14) refer to low-level controls which are more commonly used on steam boilers than hot water boilers. Two commenters called attention to the fact that steam boilers were not mentioned in the "Scope." Dampers for gas-fired steam boilers are not included in this Final Rule because the number of such residential heating plants in use is relatively small (estimated to be less than 1 percent), and the safety problems involved have not yet been investigated in depth by DOE.

(2) *Dampers for Oil-Fired Systems.* DOE stated in the Proposed Rule that vent dampers on oil-fired heating systems are being temporarily excluded from RCS until present studies at Brookhaven National Laboratories (BNL) are completed. Comments were solicited.

Two commenters objected to exclusion of dampers for oil systems. One said such an exclusion was inconsistent with DOE's stated goal of conservation. The other pointed out that NECPA does not differentiate between dampers for oil furnaces and dampers for gas furnaces. A third commenter said if dampers on oil furnaces are judged not cost effective, a second look should be taken at the cost effectiveness of dampers for gas furnaces. The commenter experienced "negative cost results" with dampers for gas furnaces. One commenter said BNL tests were not conclusive. BNL found a 5 percent savings for one type of damper installed on an oil-fired furnace with a modern (flame retention head) burner, but a 10 percent savings when installed on a furnace with an "old type" burner.

DOE still maintains that dampers for oil-fired systems may offer smaller savings than dampers for gas-fired systems. No recommended installation procedures have been published by a national standard organization which DOE could use as a basis for preparing detailed and complete installation standards. DOE will not include the dampers for oil-fired systems in the RCS program at this time. They will, however, receive further consideration at a later date. It should be noted that if any State determines that vent dampers on oil-fired systems will contribute to the effectiveness of their program, they could be added under the provisions of § 456.319.

(3) *Water Heater Dampers.* In the Proposed Rule, DOE stated that vent dampers for water heaters were excluded from the program because they are beyond the scope of the program. Furthermore, such installations often do not prove cost effective. DOE also expressed concern about the safety and effectiveness of a water heater vent damper which used the same vent and same combustion air supply as the space heating furnace.

Twelve commenters discussed water heater dampers. None thought the combination concept unsafe. Five thought that adding the damper to the water heater would save energy. One commenter described a test in Texas where a thermal damper on a water heater failed to show an energy savings. Three commenters pointed out that installing a damper on the water heater increases the level of savings obtainable from the furnace damper. One commenter recommended a well-

instrumented field test to determine the magnitude of the energy savings for the combination. Another commenter suggested that a vent damper be *required* on any gas water heater installed contiguous to a gas-fired central furnace or boiler, claiming that it is one of the most cost effective conservation measures. Two others asserted that water heater dampers were cost effective.

All of the RCS measures are specified in NECPA, Title II, Part 1, section 210. NECPA included as an RCS measure "devices for modifying flue openings which will increase the energy efficiency of the heating systems. . . ." Although DOE does have authority to add other measures to this list as appropriate, we determined not to do so until after the RCS program was initially implemented. To add measures before program implementation would entail extensive evaluation of over 100 energy conserving products suggested during the RCS comment period, as well as standards development for many of them. In addition, as measures are added to the program, audit costs increase. DOE did provide States an opportunity, however, to add State-specific measures in their State Plan (see § 456.319). This means that States may include water heater dampers as a State measure in the RCS program if the requirements of § 456.319 are met.

DOE did not mean to imply in its earlier statement that *all* vent damper installations on water heaters are not cost effective. Installation costs for various kinds of dampers vary widely. The cost effectiveness of dampers on water heaters appears to depend upon installation cost, type of damper, and on location of the water heater. Water heaters located in areas essentially at outdoor temperatures will not benefit significantly from a vent damper.

(4) *Dampers for LPG Systems.* DOE stated in the Proposed Rule that liquified petroleum gas (LPG) systems were excluded because of the additional safety problems associated with such systems. Six commenters addressed this subject, all expressing the view that LPG appliances should be treated the same as natural gas appliances. In other words, dampers for LPG appliances should not be excluded from the RCS program. The commenters appeared to believe that the installation of a damper on an LPG appliance did not present a safety hazard greater than installation of a damper on an appliance burning natural gas supplied by a utility.

LPG is heavier than air. It remains DOE's view that with LPG the possibility of gases collecting around appliances and creating a hazardous condition is greater than with natural gas which is lighter than air.

DOE believes some mixing and diffusion of leaking LPG gases would occur and, therefore, that the vent system would carry off at least some of the leaking LPG. A closed damper with perhaps a 10 percent open area does cause a very small but real reduction in the draft available to remove leaking gas. DOE maintains that this reduction in draft is acceptable in the case of natural gas. DOE is as yet unconvinced that the draft loss is acceptable in the case of LPG. Accordingly, DOE will exclude dampers for LPG appliances from the RCS program until such time as test data by impartial authorities is presented to demonstrate that LPG gas leakage is adequately vented through the appliance draft hood with the vent damper closed.

(5) *Draft Hood Spillage Check To Be Performed Only When Outdoor Temperature Is Above 65°F.* Because vent capacities are reduced when the differences between indoor and outdoor temperatures are the least and wind velocities are low, DOE required in the Proposed Rule that all checks of venting capacity or draft hood spillage be conducted when the outside temperature is above 65°F and the wind velocity is less than 10 mph.

The proposal was challenged by 15 commenters generally expressing the view that the requirement was unrealistic, impossible or impracticable, unenforceable, expensive and unreasonably burdensome. In the colder regions of the country, installation would be precluded in fall and winter when the savings potential is the highest. Three commenters predicted that the 65° temperature restriction would limit installations to such an extent that contractors would no longer be interested in installing dampers. One gas company expressed the opinion that homeowners, required to wait many months for warmer weather necessary for the prescribed spillage test, may lose interest in the measure. Scheduling of inspections within a one week time interval after installation will often be impossible if the date of the installation cannot be established in advance, but is instead determined by the weather.

In explaining why the proposed warm weather spillage test was unnecessary commenters offered these arguments:

(a) In the open position, a vent damper conforming to the ANSI standard, does not reduce vent temperature nor restrict the effective draft by a significant amount.

(b) Conditions other than outdoor temperature are more likely to result in insufficient draft or spillage.

(c) When the furnace venting system inspection is made at temperatures well below 65°F, the year round adequacy of the venting system can still be assured. The methods identified by commenters included:

(i) Comparing design and dimensions of the venting system with the requirements of the National Fuel Gas Code.

(ii) Adoption of a SHEIP[1] technique for evaluating draft in warm weather from data collected in cold weather (without specifying what this technique included).

Several commenters stated that if the 65°F temperature restriction is imposed for damper installations, it should logically also be imposed whenever furnaces or vent systems are modified or replaced. One commenter carried this a step further by explaining that replacing a furnace would involve more risk than retrofit installation of a damper. The new furnace, if it has a higher rated output than the old furnace, would probably result in increased loading of the vent system. It could also result in lower temperatures of the vent gas as a result of more excess air, more dilution air or higher efficiency. They recommended changing the minimum permissible outdoor temperature to 40°F. One damper manufacturer recommended reliance upon a damper spill switch. Another damper manufacturer recommended a damper incorporating a draft detector.

It appears that the 65°F damper spillage test was interpreted by commenters as a test of the damper. Actually DOE intended the test primarily to check the adequacy of the existing venting system.

In the report "An Assessment of Retrofit Automatic Vent Dampers for Residential Heating Systems" published November 1977, Arthur D. Little, Inc., concluded that an inspection program prior to installing vent dampers in existing heating systems will result in a small decrease in the number of heating system-related accidents occurring each year. Because the installation of vent dampers entails the addition of a device in the venting system and in the safety control system, vent dampers could be expected to result in increased accidents. However, the inspections preceding damper installation will bring to light deficiencies in some of the existing furnace control systems and venting systems. Some of these deficiencies, if left undetected and

[1] The Space Heating Efficiency Improvement Program (SHEIP) was developed by the American Gas Association to demonstrate the effectiveness of various furnace modifications in increasing furnace efficiency.

uncorrected, would eventually result in injury or death. A. D. Little, Inc., maintained that detection and correction of these deficiences could save more lives than could be lost as a result of damper accidents. To ensure that the net effect of a damper retrofit program is a reduction in the frequency of total accidents, it is important that field inspections of heating systems and venting systems be carefully performed by testing the existing vent system under conditions most likely to result in spillage. The 65°F outdoor temperature limit is thought to be the most dangerous condition likely to be encountered. Chimney induced draft falls off as the temperature outdoors decreases. A heating system would almost never be called upon to operate when the outdoor temperature rose to 65°F. At outdoor temperatures of 65°F or higher, heat given off by appliances, lights and building occupants, as well as solar heat gain, would maintain indoor temperature in the comfortable range without help from the heating system. It is only when outdoor temperatures fall below 65°F that the heating system is called upon for heat.

DOE acknowledges that the 65°F requirement would unduly restrict damper sales. Clearly what is needed is a sound, widely accepted technique to permit measuring draft at any outdoor temperature (below 65°F) and then converting that measured value to the draft which would result on a 65°F day with all other conditions remaining unchanged. Insofar as can be determined, there is no such technique. DOE has been unable to obtain any material to confirm the suggestion that a technique was developed under the SHEIP program.

DOE in the Final Rule has provided an alternate to the 65°F and 10 mph test requirements. The alternate procedure includes a careful visual inspection of the interior of the entire venting system to ensure that it is free of any obstructions which would impair draft such as fallen chimney mortar or tiles, dead birds, bird nests, crushed metal duct, etc.

In the meantime, DOE would be willing to work with industry groups or others to develop a technique for determining the likelihood of spillage when outdoor temperatures are 65°F or higher using draft data collected when outdoor temperatures are lower than 65°F or to validate an existing technique. At such time as a satisfactory technique is available, DOE will incorporate it into the installation standard.

(6) *Damper and Furnace in Unheated Space.* In the Proposed Rule, DOE excluded from the RCS program installations of dampers on heating systems located in spaces at or near outdoor temperatures such as unheated basements, attics, or crawl spaces with openings to the outdoors.

Three commenters concurred with DOE saying dampers were not cost effective in these circumstances. Commenters from the Gulf states recommended that the damper be excluded from the RCS program in their states because 65–75 percent of the furnaces there are installed in areas which communicate freely with the outdoors. One commenter, however, felt that vent dampers should be permitted in unheated spaces. They claimed effectiveness of the installation would be increased if the damper were to be installed on a boiler or hot water heater. Two commenters questioned whether the term "unheated space" can be properly applied to a basement in which the house furnace is located. In such basements the temperature will be 55–60°F because of the heat given off by the furnace jacket, duct work and piping. The warmer basement will reduce the amount of heat flowing down from the floor above into the basement.

In the Final Rule, DOE has retained the prohibition but explains that the term "unheated space" specifically refers to that which is open to the outdoors. It does not refer to closed basements, rooms, alcoves or closets where the temperature of the space is considerably higher than the outdoor temperature because of heat rejected by heating system and water heater jackets, venting systems, warm air ducts, and piping containing hot water.

(7) *Wiring Diagrams.* The proposed installation standards permitted only those installations where wiring diagrams supplied by the vent damper manufacturer showed the vent damper to be compatible with the existing heating system. Comments received in response to this requirement are discussed in section G.

(8) *Field Test of Actuating Temperature for Damper-Closing Temperature Control.* The standard for electrical dampers (ANSI Z21.66–1977) requires that a damper equipped with a damper closing temperature control shall not be capable of automatically closing when the temperature of the air in the damper is less than 225°F under specified test conditions. A primary failure mode, and the one that the damper closing temperature control is designed to protect against, is an automatic gas valve that sticks open so that gas is flowing even though there is no call for heat. In this case, the damper would be closed and the burner would be firing if a protective device, such as a damper closing temperature control, were not actuated. The Proposed Rule discussed the requirement for checking a temperature control in the field. The "check" consisted of operating the furnace for 10 minutes, then reducing the comfort thermostat to shut off the main burner gas flame. The damper should remain open for a short period of time and then close. In addition, the Proposed Rule required a measurement of the temperature of the gases downstream of the draft hood after the heating system had been in operation for 5 minutes. If this temperature was not above 375°F, the damper was not to be installed. It was calculated that if a temperature below 375° prevailed at normal full firing rate, then the temperature resulting from operation with partially blocked fuel gas flow could be below 225°F. This would not be high enough to actuate the device which prevents damper closure if the gas valve were stuck open.

The American Gas Association (AGA) objected to the 375°F temperature requirement because in some instances it would preclude electric dampers capable of meeting the 225°F requirement of the ANSI Z21.66 standard from being installed. AGA also pointed out that ANSI Z21.66 does provide a performance test requirement for the damper closing device and there is no reason why the damper should receive further testing in the field.

One commenter questioned DOE's conclusion that a 375° vent gas temperature at full burner output ensures a temperature higher than 225° at lesser burner outputs. However, no data to support this challenge was furnished.

DOE considers it essential to verify that a damper with a damper closing temperature control will remain open at the lowest vent gas temperature which could be encountered in the field. A vent gas temperature below 225°F could prevail in the case of a furnace installation having a large dilution air flow such as would result from a high chimney, large chimney diameter, large draft hood and/or high efficiency furnace. If installed on such a furnace, a damper just meeting the 225°F test requirement of paragraph 2.7 of ANSI Z21.66–1977 could cycle open and closed or even remain closed with the furnace in operation and dangerous spillage from the draft hood could result if the automatic gas valve malfunctioned in the open position. The danger of spillage due to a closed damper is increased if there is a partial reduction in the flow of fuel gas to the main burner, such as would result from a gas valve which

failed to close completely. Under such conditions the temperature of the combustion products entering the damper is reduced.

By requiring a vent gas temperature of 375°F or more at full fuel gas flow, DOE is assured that the temperature of vent gases will remain above 225°F for the majority of hazardous leaking fuel valve conditions.

While this requirement may well disqualify some dampers for some installations, sound safety considerations require that the requirement be retained.

Similarily, DOE considers the operational check of the damper closing temperature control as installed to be necessary as verification of proper operation. This requirement is also retained. DOE notes that the simple test specified is easily and quickly performed.

(9) *Redundant Gas Valves for Thermal Dampers.* In the Proposed Rule, DOE required the addition of a second automatic gas valve on each furnace where a thermal damper is to be installed. The requirement was established because DOE feared that if the original valve failed to close tightly, the temperature of the gas reaching the thermal damper would be insufficient to cause it to open an adequate amount and spillage might result at the draft hood.

Ten responses were submitted on the second gas valve requirement. Nine who opposed the requirement said that it was unnecessary, unwarranted, and would increase overall costs to such an extent as to compromise cost effectiveness of thermal dampers. One commenter claimed that the total cost for installation of the valve was $130. Another said the valve increased overall cost of the damper installation by 60 percent. The excellent safety record of thermal dampers in recent years was cited as proof that the valve was unnecessary. One commenter said that there was no room in the furnace vestibule for the second gas valve. Another commenter said in some parts of the country a different contractor must be called in to install the second valve encumbering the damper installation beyond the expected benefits. Some commenters also felt that installing the second valve would not make thermal dampers safer. They argued that:

- The redundant valve will not prevent all potential sources of reduced rate gas flow. Other sources include—
  (a) partially blocked burner orifice;
  (b) reduced supply line pressure;
  (c) defective regulator;
  (d) dirt in gas line.
- When the thermal damper is fully closed, the 10 percent remaining open area is more than sufficeint to carry off any leakage of unburned gas.
- If fuel gas is entering the furnace at a fraction of the full load rate and burning there, the thermal damper will not remain in the closed position but will open in response to whatever vent gas temperature rise actually occurs.
- Existing thermal dampers certified by AGA as complying with ANSI standard Z21.68–1978, begin to open at and remain open at a lower temperature than do electric dampers.

Two commenters discussed the hypothetical thermal damper which would not begin to open until the temperature approached 370°F. Both were of the opinion such a design would not be approved as complying with the ANSI standard because the feature would be judged inconsistent with reasonable concepts of safety. Another said it was unlikely that a damper would be designed to "snap" open as the 370°F temperature was approached, but would more likely be designed to open gradually.

Three commenters suggested that DOE's objectives would be better served by requiring dampers to open at a temperature substantially below 370°. Such a requirement would exclude any thermal damper which failed to open sufficiently at part load regardless of the cause of the part load operation. The German damper standard DIN 33881 Part 1 (1478) requires testing of resistance to flow at 2 settings:

- at maximum rated flow at 200°C
- at 0.5×maximum rated flow at 100°C

This commenter went on to say that on all known types of thermal dampers, the amount of opening is a function of vent gas temperature. The present ANSI standard does not prohibit dampers which do not open at less than the rated firing rates, but consideration is being given to revising the standard to require a test at 200°F ± 5°F vent gas temperature or at 30 percent of the original firing rate, whichever provides a lower vent gas temperature. Under the test condition selected, spillage from the draft hood must not occur.

The AGA Laboratory and Underwriters Laboratories, Inc. (the only nationally recognized laboratories presently active in testing dampers for gas heating equipment) have each provided DOE with information which indicates that they would consider unsafe and would not "list" any thermal damper which would not open sufficiently at temperatures likely to prevail if the gas valve failed to close completely. With such a damper no longer a real possibility, failure of the gas valve to close completely would not pose a serious safety hazard. The Final Rule, therefore, requires that all thermal vent dampers be listed by a nationally recognized testing laboratory. Accordingly, the requirement for the second gas valve will be dropped from the rule.

(10) *Electricity Shut Off Prior to Damper Installation.* In the Proposed Rule, DOE expressed concern about the possibility that the installer may receive an electrical shock if power is left on while he is checking for loose electrical connections, worn electical insulation, etc. Comments were requested on the importance of turning off electrical power prior to installation.

One controls manufacturer pointed out that its own installation instructions require the installer to turn power off initially, then turn it on while certain tests are made and finally turn it off again. Another commenter agreed with DOE that both gas and electricity should be cut off before the damper installation is made but that it is incumbent upon a qualified installer to install the damper in a safe manner. If he does not do so, there are safety problems more serious than shock hazard.

DOE considers it appropriate to include the requirement that electricity be turned off before beginning the damper installation. The electricity shut off is called for by the "Procedure for Installation of Automatic Vent Dampers Devices on Existing Appliances" which is Exhibit B in each of the three ANSI damper standards, Z21.66, Z21.67 and Z21.68. The shut off is also called for by "Recommended Procedure for Installing Electrically Operated Automatic Vent Damper Device on Existing Appliances" which is Appendix 1F of the Addendum and Tentative Interim Amendment to the National Fuel Gas Code ANSI Z223.1a–1978.

(11) *Safety and Effectiveness of Vent Dampers on Water Heater/Furnace Installations Using Same Vent Air.*

This subject was addressed in item (3) above.

(12) *Dampers in Unheated Spaces and Combustion Air from Heated Space.* In the Proposed Rule, DOE requested comments on whether vent dampers should be allowed when installed in an unheated area if combustion air is taken from a heated space. It is assumed that draft hood dilution air is taken from the same heated space. An example of this would be a furnace installed in an "unheated" closet with no vent to the outdoors; combustion and dilution air would come through openings in the closet door which opens into heated living space. The issue was addressed

directly by only two commenters. In both instances, they answered affirmatively.

DOE maintains that if the unheated area is enclosed, its temperature will be higher than that of the outdoors primarily because of heat gain in the space from the heating appliance and water heater jacket, vent systems, warm air ducts and/or piping containing hot water. Under these circumstances, installation of a damper would result in a fuel saving. This is discussed further under item (6). In the Final Rule, DOE has clarified what it means by "unheated space."

(13) *Vent Damper Closing Time.* In the Proposed Rule, DOE asked if vent damper standards should require stricter control on vent damper closing time?

Five commenters responded to the question. None of these recommended that limits be established on closing time. One commenter stated that limits on closing time were unnecessary. A gas utility said closing times were related to efficiency and not safety. Another commenter reported that 3–4 percent reduction in energy savings occurs when a slow closing damper is substituted for a fast closing one. Two damper manufacturers provided information on the closing time for their products.

Since to date no field test data on the effect of damper closing time upon energy savings and safety have been collected by impartial investigators and made available to DOE, the Department has concluded that it would be premature to establish limits on closing times in this Final Rule.

(14) *Inspections After the Initial Post-Installation Inspection.* In the Proposed Rule, DOE requested comments on whether there should be additional inspections after the initial post-installation inspection? In particular, should there be an inspection during the first heating season following installation?

Ten commenters addressed the problem. Three commenters were of the opinion that periodic follow-up inspections should be called for. Five said it was not appropriate to call for such inspections. One commenter raised pertinent questions:

Who would make the inspections?

What would it cost?

Would it be physically and economically feasible?

A utility company pointed out that it had no personnel available with expertise to perform the follow-up inspections.

DOE believes that an annual inspection of furnace, venting system, and damper by a qualified inspector is highly desirable from both the safety and the fuel conservation viewpoints and urges every homeowner to have the inspection performed. It is noted that the "Marking" section of each ANSI damper standard requires that a label be posted on each damper recommending annual inspection of appliance and damper by a qualified installer. Therefore, DOE has included recommendations for annual inspections in the Final Rule. However, DOE has not made annual inspections mandatory since DOE believes that the RCS inspection entity should not be required to do more than one mandatory inspection.

(15) *Damper Closing Control.* One commenter suggests that the term "damper closing control" should be changed to "damper opening control" because the purpose of the control is to hold the damper *open.*

Although this comment has merit, paragraph 2.7 of the ANSI damper standard Z21.66, calls the device "damper closing temperature control." DOE prefers to employ the same identification terms as were employed by ANSI.

(16) *Burner Alignment (Hot Spots on Heat Exchanger).* The Proposed Rule required the installer to determine that burner alignment will not cause hot spots on the heat exchanger. Two commenters discussed this requirement, both saying that such a determination cannot be made in the field.

On the basis of the comments received, this requirement has been changed to require the installer only to look for evidence of burner misalignment.

(17) *Gas Leakage.* The Proposed Rule required that the installer determine that concentrations of combustible gas in the vicinity of a heating appliance are less than 20 percent of the lower explosive limit and that carbon monoxide is less than 50 ppm.

Four commenters addressed this requirement. One commenter said that determination of the concentration of combustible gas as less than 20 percent of lower explosive limit required more sophisticated and expensive test equipment than is in general use. All were of the opinion that there should be *no* combustible gas and *no* CO in the room. If either of these contaminants is detected, the leak should be found and corrected before proceeding with installation of a damper.

In the Final Rule, the language has been clarified to indicate that no combustible gas and no carbon monoxide must be present. The quantitative limits were set forth by DOE only to define the meaning of the terms "no combustibles gas" and "no carbon monoxide." The CO level of 50 ppm was chosen because that is the lowest marking on several CO test instruments in common use. The 50 ppm CO level is also the value which has been established by the World Health Organization as the highest acceptable level for an 8-hour exposure without harmful effect upon human health. The 20 percent of the lower combustible limit figure corresponds approximately to the lowest concentration of odorized natural gas detectible by smell.

The Final Rule permits checking for the presence of unburned gas by smell. The requirement that CO levels must be measured by instrument has been retained.

(18) *Furnace Warranty.* Three commenters suggested that consideration be given to the effect upon a furnace warranty of installing a damper. One furnace manufacturer forwarded a copy of its press release notifying its dealers and other customers that field application of any retrofit device that alters its design for venting combustion products is considered potentially hazardous and may void the warranty.

DOE does not believe that a standard is the proper vehicle for resolving questions relating to liability and warranties. However, DOE is of the conviction that a damper properly installed will have no adverse effect upon the furnace. Indeed it will result in a higher seasonal efficiency for the combined furnace-vent system. Moreover, the inspection of a furnace and vent system, which is a necessary precondition for installation of a damper, may disclose deficiencies and safety hazards requiring correction that may not otherwise have been discovered.

K. Interim Installation Standard for Automatic Intermittent Pilot Ignition Devices (IID's)

DOE included herein an interim installation standard for IID's. The standard is interim because it is based on the proposed ANSI standard for "Automatic Intermittent Pilot Ignition Systems for Field Installation" and, therefore, subject to change. When the ANSI standard is finalized, DOE will reevaluate the need for the interim installation standard.

Only two substantive comments were made regarding the IID standard. DOE asked for comments on the Proposed Rule regarding the absence of a limitation on the voltage or current between electrodes which could result in a startle shock or lethal hazard. A major manufacturer of IID's stated that exclusion of this voltage limitation was probably an oversight in the ANSI

standard. AGA expressed confusion as to why the voltage limitation was of concern. They stated that if the installer failed to install the system in an electrically safe manner "there are safety problems more significant than shock hazard." DOE has not specifically addressed these comments in the installation standard since paragraph 1.2.6 of the standard requires that IID's meet "reasonable concepts of safety" in order to be listed. Absence of a voltage or current limitation which could result in a startle shock or lethal hazard is outside reasonable concepts of safety. In addition, paragraph 1.2.10 of the ANSI standard requires that "All electrical equipment, wiring, and accessories supplied for use with the system shall be submitted for examination." DOE has, therefore, determined that sufficient safeguards exist within the standard to ensure that a lethal hazard does not occur.

L. Installation Standards for Caulks and Sealants

Only two comments were submitted on the Installation Practice for Caulks and Sealants. One stated they were unnecessary; the other that they were necessary. The practice was retained since:

—it did not appear to cause any economic burden;

—it does help ensure more effective moisture control; and

—the Tennessee Valley Authority experience indicates that poor workmanship with contractor installed caulking is relatively common.

IV. Regulatory Analysis and Urban Impact Assessment

The President, by Executive Order 12044, has directed agencies of the executive branch to conduct a Regulatory Analysis of regulations which they prepare that are likely to have a major economic impact. In accordance with OMB Circular A–116, an Urban and Community Impact Assessment should be prepared when the Proposed Rule is a major policy and program initiative. This assessment should be incorporated into the Regulatory Analysis.

DOE determined that the Residential Conservation Service Program, authorized under Title II, Part 1 of the National Energy Conservation Policy Act, was a major action which required preparation of a Regulatory Analysis and an Urban and Community Impact Assessment. Consequently, the Department prepared the two analyses in draft in conjunction with the publication of the Proposed Rule for the RCS program on March 19, 1979 (44 FR 16546). These analyses were finalized for publication in conjunction with the Final Rule which was published November 7, 1979 (44 FR 64602). The final Regulatory Analysis, which incorporates the final Urban and Community Impact Assessment, includes analysis of this Final Rule.

A single copy of the Final Regulatory Analysis may be obtained by writing: Mr. James R. Tanck, Chief, Building Applications and Incentives Branch, Department of Energy, Conservation and Solar Energy, 1000 Independence Avenue, S.W., Room GH–068, Washington, D.C. 20585.

V. Environmental Impact Statement

In accordance with the requirements of the National Environmental Policy Action of 1969 (NEPA), 42 U.S.C. 4321 *et seq.*, DOE prepared an Environmental Impact Statement for the entire Residential Conservation Service Program. The subject matter of this rulemaking was evaluated in the programmatic Environmental Impact Statement. A notice of availability of the Final Environmental Impact Statement (DOE/EIS–0050) was published in the **Federal Register** on November 7, 1979 (44 FR 64602). A copy of the final Environmental Impact Statement may be obtained by writing:

Mr. James R. Tanck, Chief, Building Applications and Incentives Branch, Department of Energy, Conservation and Solar Energy, 1000 Independence Avenue, S.W., Room GH–068, Washington, D.C. 20585.

VI. Consultation With Other Federal Agencies

In preparing this Final Rule, issues and options were reviewed by representatives of the National Bureau of Standards.

VII. Contractor Contributions to the Rulemaking

The following entities have made contributions to this rulemaking.

1. The Solar Energy Research Institute (SERI); Rocky Flats Plant of North American Rockwell; and Science Applications, Inc., (SAI) assisted in the development of the proposed standard for wind energy systems. SERI and SAI also assisted in the development of the thermosiphon hot water heaters and solar swimming pool heaters standards.

2. Calspan, Inc., assisted in the development of the installation standards for vent dampers and IID's and modification to the material standards for vent dampers.

Authority. Part 1 of Title II of the National Energy Conservation Policy Act, Pub. L. 95–619, 92 Stat. 3206, *et. seq.* (42 U.S.C. 8211–8226), Department of Energy Organization Act, Pub. L. 95–619, 91 Stat. 565, *et. seq.*, 42 U.S.C. 7101, *et. seq.*

In consideration of the foregoing, the Department of Energy amends Chapter II, Title 10 Part 456 of the Code of Federal Regulation, as set forth below.

Issued in Washington, D.C., September 4, 1980.

Maxine Savitz,

Deputy Assistant Secretary for Conservation, Conservation and Solar Energy.

1(a). 10 CFR Part 456 is amended by deleting section "456.706 Wind systems installation standards [Reserved]", from the Table of Contents and by revising or adding the following entries to the Table of Contents:

PART 456—RESIDENTIAL ENERGY CONSERVATION PROGRAM

* * * * *

Sec.

456.703 Thermosiphon hot water heaters.
456.704 Swimming pool heaters.
456.705 Wind energy devices.

* * * * *

456.914 Standard practice for the installation of electrically-operated, mechanically-actuated, and thermally-actuated automatic vent dampers for use with gas-fired central furnaces and low-pressure hot-water boilers.
456.915 Interim standard practice for the installation of automatic intermittent pilot ignition devices (IID's).
456.916 Standard practices for installation of caulks and sealants.

1(b). 10 CFR § 456.301 is amended by adding as the last two sentences the following:

§ 456.301 Scope.

* * * Certain standards are incorporated by reference into this Subpart as though set forth in full herein, pursuant to 5 U.S.C. 552(a). Identification, description, and information regarding availability of and future changes to the incorporated standards are contained in Appendix II to this Part.

2(a). 10 CFR § 456.314 is amended by adding paragraphs (b), (c), and (d) to read as follows:

§ 456.314 Qualification procedures for auditors installers, and inspectors.

* * * * *

(b) *Installers and inspectors of automatic vent dampers and automatic intermittent pilot ignition devices (IID's) for gas-fired central furnaces and low-pressure hot water boilers.* The State Plan shall contain procedures to assure that any person or persons installing automatic vent dampers or automatic intermittent pilot ignition devices (IID's) for gas-fired

central furnaces and low-pressure hot water boilers under the circumstances described in the State Plan pursuant to § 456.305 and any person or persons conducting a post-installation inspection of an automatic vent damper or IID pursuant to § 456.313(a) shall have the following qualifications—

(1) Installers and inspectors shall demonstrate an understanding of applicable codes and regulations.

(2) Installers and inspectors shall demonstrate an understanding of gas appliances used in residential buildings, including basic system requirements, components and operation, and shall demonstrate an understanding of potential malfunctions of gas appliances.

(3) Installers and inspectors shall demonstrate an understanding of gas appliance controls and safety controls, including automatic gas valves, limit switches, and thermostats. Installers and inspectors shall also demonstrate an understanding of basic furnace and boiler circuitry, including electrical components, and the use of appropriate meters for testing gas appliance circuitry. They shall also demonstrate an understanding of proper component sequencing and be qualified to determine the compatibility of vent dampers and appliances.

(4) Installers and inspectors shall demonstrate an understanding of the purpose, general structure, and operational systems of vent dampers. They shall also demonstrate an ability to service and install electrical, mechanical, and thermal vent dampers and shall be familiar with the advantages and disadvantages of each type. *Exception.* Installers and inspectors of only IID's need not comply with this paragraph. Nor must installers of only thermal vent dampers demonstrate an ability to service and install electrical or mechanical vent dampers.

(5) Installers and inspectors shall demonstrate an understanding of the purpose, basic system requirements and components, and operation of IID's. In addition, they shall demonstrate practical application in servicing and installing IID's, and understanding of schematic diagrams and potential malfunctions of IID's. *Exception.* Installers and inspectors of only vent dampers need not comply with this section.

(6) Installers and inspectors shall demonstrate: (i) an understanding of types of vents, draft diverters, and heat transfer components; (ii) an understanding of venting theory including ventilation air, dilution air, and vent sizing; (iii) an understanding of venting installation procedures; (iv) knowledge of which installations are prohibited; (v) that they are qualified to perform leak and spillage checks; and (vi) that they are qualified to use instrumentation to measure carbon monoxide and carbon dioxide emissions from gas appliances.

(7) Installers and inspectors shall demonstrate an understanding of proper combustion and proper flame characteristics and shall be familiar with gas piping procedures.

(8) Installers and inspectors of vent dampers shall demonstrate an understanding of the installation standards in § 456.914.

(9) Installers and inspectors of IID's shall demonstrate an understanding of the installation standards in § 456.915.

(c) *Installers and inspectors of wind energy devices.*

(1) The State Plan shall contain procedures to assure that any person or persons installing a wind energy device under the circumstances described in the State Plan pursuant to § 456.305 and any person or persons conducting a post-installation inspection of wind energy device pursuant to § 456.313(a) shall have the following qualifications:

(i) Familiarity with the installation standards for wind energy devices in Subpart G;

(ii) Familiarity with the structural characteristics of wind energy devices;

(iii) Familiarity with national and local codes governing the electrical interconnection between the wind energy device and the residential and/or utility electrical system; and

(iv) A general knowledge of the test procedures described in § 456.705.

(2) The State Plan shall contain procedures to assure that any person or persons installing a wind energy device under the circumstances described in the State Plan pursuant to § 456.305 shall demonstrate proficiency in the installation of wind energy devices, and familiarity with the testing of wind energy devices in accordance with the procedures described in § 456.705.

(d) *Installers and inspectors of solar domestic hot water systems, active solar space heating systems, and combined active solar space heating and solar domestic hot water systems.*

(1) The State Plan shall contain procedures to assure that any person or persons installing a solar domestic hot water system, an active solar space heating system, or a combination thereof, under the circumstances described in the State Plan pursuant to § 456.305, and any person inspecting such systems pursuant to § 456.313(a), shall individually or collectively be knowledgeable about:

(i) The residential construction methods employed in the region and the characteristics of structures that would preclude a safe and enduring solar installation;

(ii) The applicable provisions of the *HUD Intermediate Minimum Property Standards Supplement,* as required in Subpart G;

(iii) The design, operation, installation and degradation of residential hot water and heating systems with which the solar devices will interconnect; and

(iv) The connection of the solar devices into the existing residential systems, including testing for satisfactory performance of the solar devices and the modified system, according to the requirements of the *HUD Intermediate Minimum Property Standards Supplement* as required for the program in Subpart G.

(2) The State Plan shall contain procedures to assure that any person or persons installing a solar domestic hot water system, an active solar space heating system, or a combination thereof under the circumstances described in State Plan pursuant to § 456.305, shall demonstrate proficiency in the connection of the solar devices into existing residential systems, in conformance with the applicable provisions of the *HUD Intermediate Minimum Property Standards Supplement,* as required for the program in Subpart G.

2(b). 10 CFR 456.701 is amended by revising the fourth sentence to read as follows:

§ 456.701 Scope.

* * * Certain standards are incorporated by reference into this Subpart as though set forth in full herein, pursuant to 5 U.S.C. 552(a). * * *

3. 10 CFR, Part 456 is amended by adding §§ 456.703, 456.704 and 456.705 to read as follows:

§ 456.703 Thermosiphon hot water heaters.

Thermosiphon Hot Water Heaters shall be constructed and installed in compliance with the applicable provisions of the HUD Intermediate Minimum Property Standards Supplement, Solar Heating and Domestic Hot Water Systems, 4930.2, 1977 Edition, with the exception of several specific provisions that are inappropriate to this technology. The excluded sections are 56151.4.2 and Appendix A, which present procedures for calculating active solar domestic hot water system performance.

§ 456.704 Swimming pool heaters.

Solar swimming pool heaters employing glazed flat plate collectors or a nonpotable heat transfer fluid to capture and transfer solar energy to the pool water, shall be constructed and installed in compliance with the applicable provision of the HUD Intermediate Minimum Property Standards Supplement, Solar Heating and Domestic Hot Water Systems. 4930.2, 1977 Edition. Solar swimming pool heater systems employing nonglazed collectors and the direct heating of recirculated pool water are exempt from these standards.

§ 456.705 Wind energy devices.

(a) *Scope.* This section establishes the standards for electrical wind energy devices when they are installed or supplied under the RCS program. Only electrical wind devices known as small wind energy conversion systems (SWECS) that do not utilize electrical storage and that meet the standards of this section may be installed or supplied as program measures.

(b) *Definitions.* For purposes of this subpart:

(1) The term "anemometer" means a device to measure wind speed.

(2) The term "anemometer distance constant" means a measure of the frequency response characteristics of an anemometer which is determined by the length of wind run that must pass an anemometer before it indicates 63 percent of the actual amplitude of a step-change gust.

(3) The term "atmospheric test" means the conduct of SWECS testing under natural wind conditions.

(4) The term "bin width" means the size of the wind speed interval (expressed in meters per second or miles per hour, whichever is most appropriate) used in the method-of-bins data analysis technique.

(5) The term "cylinder of projection of SWECS rotor" means the cylinder whose axis is aligned with the wind direction and passes through the center of the rotor, whose cross-section extends 3 rotor diameters upwind of the rotor and 6 rotor diameters downwind of the rotor.

(6) The term "disconnect" means a device or group of devices or other means by which the conductor of a circuit can be disconnected from the source of electrical supply.

(7) The term "electrical ground" means a conducting connection, whether intentional or accidental, between an electrical circuit or equipment and the earth, or to some conducting body that serves in place of the earth.

(8) The term "electrical load" means an electrical device which utilizes electrical energy.

(9) The term "electrical utility/user interconnection" means the physical connection of the electrical hardware of the SWECS to the electrical systems of both the utility and the user.

(10) The term "free stream area" means that area in a wind tunnel test section in which the wind speed in the absence of an obstruction is uniform within ±5 percent.

(11) The term "horizontal axis wind turbine" means a SWECS that has an axis of rotation of the rotor nominally in a horizontal plane.

(12) The term "interconnected SWECS" means a SWECS which is electrically connected to the utility system and could feed power back into the utility system.

(13) The term "maximum design SWECS power output," as specified by the SWECS manufacturer, means the maximum power output which could be expected from the SWECS when it is operating within its design operating conditions.

(14) The term "method-of-bins" means a data analysis technique consisting of partitioning the wind speeds observed into a selected number of equally spaced intervals or bins. The average of all SWECS power output values observed, essentially simultaneously with a wind speed value in a given bin, is the power associated with the wind speed at the center of the bin.

(15) The term "normal soil" means a cohesive soil with an allowable net vertical bearing capacity of 4,000 pounds per square foot and an allowable net horizontal pressure of 400 pounds per square foot per lineal foot of depth to a maximum lineal foot of depth to a maximum of 4,000 pounds per square foot. Rock, non-cohesive soil, and saturated or submerged soil are not "normal soil."

(16) The term "power conditioning equipment" means a subsystem of the SWECS used to accomplish electrical compatibility between the wind turbine generator's power output and an electrical load.

(17) The term "power" and the term "power output" for the purposes of this standard mean electrical output of the SWECS as represented by the product of the in-phase voltage and current components, expressed in kilowatts (KW).

(18) The term "power output curve" means a graphical plot of SWECS power output (KW) versus wind speed (meters per second or miles per hour).

(19) The term "projected frontal area" means the profile area of an object as seen from the direction of the wind velocity.

(20) The term "Rayleigh distribution" means an assumed wind speed distribution function which is used for wind energy conversion calculations. The distribution function, based on specified annual average wind speed, is defined by the following equation:

$$F(V) = \Delta V \left(\frac{\pi}{2}\right)\left(\frac{V}{\bar{V}^2}\right) \exp\left[-\frac{\pi}{4}\left(\frac{V}{\bar{V}}\right)^2\right]$$

Where:

F (V) = Frequency of occurrence associated with each incremental wind speed of Δ V centered at V. NOTE: The Distribution function is equal to 8760 (F(V)).

V = The center of the wind speed increment (meters per second/miles per hour).

V = Annual average wind speed (meters per second/miles per hour).

Δ V = Width of the wind speed increment (meters per second/miles per hour).

(21) The term "rated output" means the power output obtained from a SWECS operating at a given wind speed designated by the SWECS manufacturer.

(22) The term "rotor" means a system of rotating elements that convert the energy in the wind into mechanical shaft power.

(23) The term "rotor-swept area" means the area as seen from the direction of the wind that a rotor would pass over during one revolution.

(24) The term "Small Wind Energy Conversion System (SWECS)" means an electrical wind energy device having a rated output of less than 100 kilowatts, which may consist of such subsystems as a wind turbine generator, a tower and/or structural support equipment, power conditioning equipment and, in the case of interconnected SWECS, interconnect equipment.

(25) The term "SWECS cutout speed" means that wind speed above which the SWECS will no longer produce power under normal operating conditions.

(26) The term "SWECS manufacturer" means the manufacturer of the wind turbine generator subsystem of a SWECS.

(27) The term "SWECS Model" means a SWECS with a specific hardware configuration established by the SWECS manufacturer for fabrication and sale to the general public.

(28) The term "standard annual energy production" means a theoretical

representation of the annual energy (in kilowatt hours), obtained by multiplying the standard mean power output by 8760 hours.

(29) The term "standard foundations and anchors" means structures designed to support the maximum combined dead and live loading expected for normal soil conditions. Pile construction, roof installations, foundations or anchors designed for inundated soil conditions, etc., are not "standard foundations and anchors".

(30) The term "standard mean power output" means a theoretical representation of the power output (in kilowatts) produced by a SWECS based on the following:

(i) Power output curve of the SWECS.

(ii) Wind speed characteristics derived from a Rayleigh distribution at a designated average annual wind speed.

(31) The term "standard operating time factor" means the percentage of the total possible operating time a wind energy conversion system would be producing power based on the following:

(i) The power output curve of the system.

(ii) Wind speed characteristics derived from a Rayleigh distribution at a designated average annual wind speed.

(32) The term "survival wind speed" means the maximum wind speed, as designated by the SWECS manufacturer, at which a SWECS, in unattended operation (not necessarily producing power) is designed to survive without damage to structural components or loss of the ability to function normally.

(33) The term "tower" means a subsystem of a SWECS that supports the wind turbine generator.

(34) The term "towing test" means the conduct of SWECS testing where the SWECS is mounted on a moving vehicle (such as a truck or train flat car).

(35) The term "vertical axis" means a line of reference perpendicular to the plane of the ground.

(36) The term "vertical axis wind turbine" means a SWECS that has an axis of rotation of its rotor perpendicular to the horizontal plane of the ground.

(37) The term "wind tunnel test" means a SWECS test in artificial wind when the SWECS is mounted in a structure designed to control the wind characteristics during the test.

(38) The term "wind turbine generator" means that portion of the SWECS which converts wind energy into electric power, including components such as the rotor, generator and control equipment.

(39) The term "yaw" means the rotation of a horizontal axis wind turbine about its yaw axis.

(40) The term "yaw axis" is the axis about which the directional orientation of a horizontal axis wind turbine is changed.

(c) *Conflicts of laws.* Local statutes, regulations, and ordinances that conflict with the requirements of this standard shall apply notwithstanding the requirements of this standard.

(d) *Performance.* The following SWECS performance characteristics shall be determined through atmospheric testing by the SWECS manufacturer or a separate testing organization designated by the SWECS manufacturer. If the SWECS manufacturer modifies the SWECS model in a way which significantly impacts the performance of the SWECS, the new model shall be tested in accordance with the requirements of paragraph (j)(1) of this standard.

(1) Power Output Curve. The SWECS power output shall be defined as a function of wind speed at the center of the SWECS rotor for wind speeds up to 15 meters per second (33.6 miles per hour) or the SWECS cutout speed, if achieved during the atmospheric test. The SWECS power output curve shall be derived from discrete wind speed and corresponding SWECS power output data using the method of bins as described in the Sandid Laboratory report referenced in Appendix II to this Part. The power output curve for an interconnected SWECS shall be determined using the required power conditioning SWECS subsystem as specified by the SWECS manufacturer.

(2) Standard Mean Power Output, Standard Operating Time Factor and Standard Annual Energy Production. Using the SWECS power output curve from paragraph (d)(1) of this section, the SWECS standard mean power output, standard power operating time factor, and standard annual energy production shall be computed for the designated annual average wind speeds of 3.6, 4.5.4, 6.3, 7.1 and 8.0 meters per second (8, 10, 12, 14, 15, and 18 miles per hour). The calculations shall be made in accordance with the following procedures:

(i) The frequency of occurrence [F(V)] for each designated average annual wind speed (V) shall be determined using ΔV of one unit (one meter per second or one mile per hour), and the Rayleigh distribution.

(ii) For each designated average annual wind speed (V), multiply the frequency of occurrence of each wind speed [F(V)] calculated in paragraph (d)(2)(i) of this section, by the power indicated at that wind speed (v) in the SWECS power output curve developed according to paragraph (d)(1) of this section.

(iii) The Standard Mean Power Output (kilowatts) for a designated average annual wind speed (V) shall be determined by the summation of the values calculated for each increment in paragraph (d)(2)(ii) of this section.

(iv) The Standard Annual Energy Production (kilowatt hours) for a designated average annual wind speed (V) shall be determined by multiplying the Standard Mean Power Output (kilowatts) calculated in paragraph (d)(2)(iii) of this section, by 8760 hours.

(v) The Standard Operating Time Factor at each designated average annual wind speed (V) shall be determined by:

(A) Adding those values of the frequency of occurrence calculated in paragraph (d)(2)(i) of this section, for all wind speeds where the power produced by the SWECS is zero; and

(B) Subtracting the sum of (A) above from one; and

(C) Multiplying the result of (B) above by 100.

(3) All reported test data involving SWECS power output shall be corrected to a standard air density of 1.2 kilograms per cubic meter, using the following equation:

$$P_s = \frac{1.2}{D_m} P_m$$

Ps = power output (kilowatts) corrected to a standard air density of 1.2 kilograms per cubic meter.

Pm = measured power output (kilowatts).

Dm = air density (kilograms per cubic meter) at the test site.

(4) Reference wind data shall be corrected to the center of the SWECS rotor height using the following equation:

$$V_r = V_m \left(\frac{Z_r}{Z_m}\right)^{1/7}$$

Where:

Vr = Corrected wind speed (meters per second or miles per hour) at Zr (meters or feet).

Vm = Measured wind speed (meters per second or miles per hour) at Zm (meters or feet).

Zr = Height (meters or feet) above ground level to the center of the SWECS rotor.

Zm = Height (meters or feet) above ground level where the referenced wind speed (Vm) (meters per second or miles per hour) was measured.

(e) *Safety.* (1) The SWECS manufacturer, or a testing organization designated by the SWECS manufacturer, shall document that the SWECS model has operated safely, without loss of structural and electrical integrity, in accordance with the requirements of paragraph (j)(1) of this section.

(2) The SWECS manufacturer shall demonstrate, through atmospheric testing, that the SWECS model has operated safely without loss of structural and electrical integrity under the following conditions:

(i) Loss of Electrical Load. Loss of user and/or utility electrical system load at wind speeds equal to or greater than that corresponding to maximum design SWECS power output; but not to exceed 118 meters per second (40 miles per hour) wind speed.

(ii) SWECS disconnect (and reconnect). A SWECS interconnected to a utility electrical system shall safely disconnect from that utility system when the utility electrical circuit to the SWECS is de-energized. The SWECS shall operate without damage to any subsystem of the SWECS, the electrical load, and or the utility system when the utility electrical system is re-energized after a disconnect.

(iii) Operation of the manual and/or normal shutdown subsystem.

(3) If a SWECS manufacturer modifies the SWECS model in a way which significantly impacts the safety of the SWECS, the new model shall be tested in accordance with the requirements of paragraph (j)(1) of this section.

(f) *Installation.* (1) Siting—the SWECS shall be installed according to the area and setback requirements of local codes governing wind energy devices. If existing local codes are not specific to the installation of a wind energy device, the SWECS shall be installed such that during operation, no part of the SWECS extends over a property line or utility easement, or infringes upon the local clearance requirements for an overhead utility line.

(2) *Manufacturer's instructions.* The SWECS manufacturer shall provide detailed installation instructions to the installer of the SWECS which shall, at a minimum include, the following:

(i) A standard foundation and anchor design or specifications, for normal soil conditions; and

(ii) A detailed parts list; and

(iii) Clearly written detailed instructions for the assembly, installation, checkout, operation, and maintenance of the SWECS at a typical site; and

(iv) Warning statements, placed on the first page of the documents, containing the following instructions or equivalent: Warning: Installation of This Product Near Powerlines is a Danger. For Your Safety, Follow the Installation Directions; and

(v) For an interconnected SWECS, information and instructions for interconnecting the SWECS to a utility company's electrical system, in a manner which meets the requirements specified in paragraph (f)(6) of this section.

(vi) Grounding and lightning procedures protection which follow the National Electrical Code articles 250 (Grounding) and 280 (Lightning Arresters). Where the design features of a particular SWECS require deviation from the NEC, the SWECS manufacturer shall specify grounding and lightning protection requirements and indicate where they deviate from the NEC.

(3) *Installers Responsibility.* (i) The SWECS shall be installed in accordance with the instructions provided by the SWECS manufacturer. The installation may deviate from the SWECS manufacturer's instructions under the following conditions:

(A) Where the onsite installation requires that procedures or components deviate from the SWECS manufacturer's standard written instructions or approved components list, the installer shall obtain prior written approval from the SWECS manufacturer specifying such deviations.

(B) Where the tower foundation and anchors require modifications from the standard design (or specifications) provided by the SWECS manufacturer, due to actual soil condition which are not considered normal and the installer has obtained from the SWECS manufacturer, his designated representative, or a registered professinal engineer, a foundation/anchor design (or specification) suitable for the characteristics at the site.

(ii) In the case of an interconnected SWECS, the installer or his designated representative shall, upon request, provide the local utility with installation procedures, and the performance and safety final test report of the SWECS to be installed.

(iii) The installer shall notify the State designated inspection authority of the installation within one day of completing the installation. A copy of the SWECS manufacturer's installation instructions, together with any appropriate written approval(s) of deviation from those instructions, shall be provided to the State designated inspection authority by the installer within four days of completion of the installation.

(4) *Local utility responsibility.* (i) The local utility shall be responsible for determining that all new as well as existing utility owned protection devices will ensure safe utility operation with an interconnected SWECS.

(ii) Should the local utility require specific electrical interconnection tests to be conducted on the SWECS prior to approval of the interconnection, the test requirements shall be specified by the utility.

(5) *General SWECS electrical requirements.* All SWECS electrical equipment and the method of connecting to the user electrical load shall be installed to conform to the following articles of the National Electric Code where applicable to SWECS requirements:

NEC Article and Title	
250	Grounding
280	Lightning Arrestors
300	Wiring Methods
310	Conductors for General Wiring
430	Motors
445	Generators

(6) *Interconnected SWECS electrical requirements.* In addition to the general SWECS electrical requirements in paragraph (f)(5) of this section, interconnected SWECS shall be installed to meet the following electrical requirements:

(i) The SWECS-to-utility electrical interconnection circuit shall incorporate a safe means to automatically and/or manually disconnect the SWECS electrically from the utility electrical system such that, in the event of a utility loss of power, an emergency, or servicing of the SWECS or the utility distribution system personnel are protected from hazardous electrical contact. The disconnects shall not interfere with reliability of service and the normal operation of circuit breakers, fuses, and other protective devices. The disconnect shall be lockable in the open-circuit position and access to the disconnect shall be available to the utility company at all times.

(ii) The National Electric Code (NEC) article 230 (services) shall apply, except where the local utility has specific requirements for the method of

interconnecting to their requirements for the method of interconnecting to their electrical system and which the local utility considers adequate in lieu of NEC article 230 (services).

(iii) The interconnection to the utility electrical/user load shall be electrically located on the user's side of the utility revenue meter.

(7) Electromagnetic interference (EMI) guidelines shall apply to any installed SWECS in accordance with Federal Communication Commission (FCC) Rules, 47 CFR Parts 15 (Subparts A and F), and 18 (Subparts A, D, and H).

(g) *Manufacturer reporting requirements—final test report.* As a minimum, the SWECS manufacturer or its designated testing organization shall document the results of the performance and safety tests specified in this standard in a final test report which meets the following requirements:

(1) *Final test report location.* A dated copy of the final test report shall be kept on file with the SWECS manufacturer and, if applicable, its designated testing organization, for a period of five years and shall be available to the public and the SWECS installer upon request at the manufacturer's cost of printing, handling, and mailing.

(2) *Test load description.* The type of load, size of load and method of load control used in testing shall be stated on the power/wind speed data sheet(s) which shall be documented in the test report.

(3) *Tested survival wind speed.* The maximum wind speed (meters per second and miles per hour) the SWECS has survived without loss of structural integrity under environmental test conditions shall be stated.

(4) *Type and location of instrumentation.* The type and location of the instrumentation used for testing shall be specified in the report.

(5) *Calibration of instrumentation.* The method of calibration used, the calibration time interval used, and the traceability of the calibration references to the National Bureau of Standards shall be documented.

(6) *Statement for tests other than atmospheric.* Documents showing test data and/or results developed from other than atmospheric tests shall be labeled as such and include the following statement or equivalent with only the appropriate terms, provided in the parenthesis, specified: The (data/results) presented were derived from (Towing/Wind Tunnel/Other-specify) tests and may reflect (higher/lower) (performance/safety) information than similar data derived from atmospheric tests due to the absence of significant wind turbulence, gusts, and direction changes.

(7) *Statement of yaw motion restriction for horizontal axis SWECS.* Documents showing test data and/or results which were derived from tests where the yaw motion of the SWECS was restricted, shall include the following statement or equivalent with the appropriate terms, provided in the parenthesis, and the number of degrees of yaw restriction shall be specified: The (data/results) were derived from tests where the yaw motion of the SWECS was restricted to ± (to be specified) degrees, and may reflect (higher/lower) (performance/safety) information than similar data derived from tests where full yaw motion was allowed.

(8) *Test results.* Results from the SWECS performance and safety testing accomplished to satisfy these criteria shall be available as a separate document from the final test report. These results shall be available to the public at the SWECS manufacturer's cost of printing, handling and mailing.

(h) *Utility reporting requirements for specific electrical interconnection tests—final test reports.*

(1) The local utility shall document any specific electrical interconnection test(s) it requires, prior to approving or disapproving the SWECS interconnection, in a final test report.

(2) A copy of the final test report shall be kept on file with the local utility for period of five years and shall be available for public inspection. One copy of the report shall be sent to the SWECS manufacturer, the SWECS installer, and the State designated inspection authority.

(3) The final test report shall include but not be limited to the following:

(i) Name and address of testing organization or person;

(ii) SWECS model and serial number;

(iii) Date of test;

(iv) Test requirements;

(v) Test methods used;

(vi) Instrumentation used;

(vii) Calibration requirements;

(viii) Data reduction methods used;

(ix) Data analysis and results;

(x) Recommendations and rationale;

(xi) Actions required and justification

(i) *Labeling requirements.* (1) Prominently displayed hazard warnings shall be permanently attached to all equipment which could present an electrical hazard.

(2) At a minimum, the following information shall be provided in labels attached to the SWECS housing in a visible, easily accessible location (standard international metric units will be used followed by English units in parenthesis, for all units of measure):

(i) Maximum design SWECS power output (KW) and the wind speed at which it is achieved (meters per second and miles per hour);

(ii) Nominal voltage (volts) and maximum current (amperes);

(iii) Equipment weight (kilograms and pounds) above the foundation. Tower weight shall be included in the total if the tower is installed simultaneously with wind turbine generator;

(iv) Survival wind speed (meters per second and miles per hour);

(v) SWECS manufacturer's name and address;

(vi) SWECS model number;

(vii) SWECS serial number; and

(viii) The following statement or equivalent Warning: Installation and Maintenance of This Product Near Power Lines is a Danger. For Your Safety Follow the Installation and Maintenance Instructions.

(3) The following information shall be provided on labels attached to the SWECS tower subsystem in a visible, easily accessible location.

(i) Equipment weight of the tower subsystem,

(ii) Manufacturer's name and address;

(iii) Model number;

(iv) Serial number; and

(v) The following tower warning label or equivalent Warning: Installation and Maintence of this Product Near Power Lines is a Danger. For Your Safety Follow the Installation and Maintenance Instructions.

(4) The following information shall be provided on labels attached to the SWECS power conditioning subsystem in a visible, easily accessible location.

(i) maximum power input (KW), rated voltage (volts) and rated current (amperes) of the power conditioning subsystem;

(ii) Manufacturer's name and address;

(iii) Model number; and

(iv) Serial number.

(5) The warning and information required in paragraphs (i)(1) and (2) of this section, as well as emergency and normal shutdown procedures, shall be provided on a label or labels easily read from ground level or located on the SWECS control panel.

(j) *Test Methods.* Data on the SWECS performance and safety characteristics as required in this standard, shall be obtained by atmospheric testing. Data to validate changes in the SWECS model design, which do not significantly impact the performance or safety of the SWECS, may be obtained by using the test methods as specified in (1)(2), or (3) below. Data to validate changes which do significantly affect performance and/or safety of the SWECS shall be

obtained only by the test method specified in (1) below.

(1) *Atmospheric test.* When an atmospheric test is used, the following requirements shall apply:

(i) Test. The atmospheric test shall be conducted for a period of time sufficient to provide not less than 25% of the SWECS Standard Annual Energy Production at 6.3 meters per second (14.0 miles per hour). The test period shall not be less than three months.

(ii) For both horizontal and vertical axis wind turbines, the SWECS rotor shall be located on a tower or support such that the minimum blade clearance above ground level is 2.5 meters (8.1 feet).

(iii) Any obstructions to the flow of air into or from the SWECS rotor which are not an integral part of the SWECS and have a total projected frontal area exceeding 25 percent of the rotor-swept area shall not be permitted within a distance of 5 rotor diameters (of the SWECS being tested) in any direction of the SWECS rotor.

(iv) SWECS which are designed for interconnection shall be tested utilizing a utility system as the electric load.

(2) *Towing Tests.* When a towing test is used to validate a change in SWECS model configuration, the following requirement shall apply:

(i) The anemometer location shall be such that the wind speed at the anemometer shall be within + 1 meter per second of the wind speed at the center of the SWECS rotor.

(ii) Any obstructions to the flow of air into or from the SWECS rotor which are not an integral part of the SWECS and have a total projected frontal area exceeding 25 percent of the rotor-swept area shall not be permitted within the clyinder of projection of the SWECS rotor.

(3) *Wind Tunnel Tests.* If a wind tunnel test is used to verify a SWECS model design change, the following requirements shall apply:

(i) The SWECS rotor shall be located at the center of the cross-section area of the wind tunnel test section; and

(ii) The SWECS rotorswept area shall not exceed 30 percent of the free stream cross-section area of the wind tunnels test section.

(4) *Yaw motion requirement for horizonal axis SWECS.* During the conduct of the tests described in paragraph (j) (1) through (3) of this section, the SWECS shall be free to operate in its normal configuration in yaw for all yaw motions ±90 degrees from the nominal wind direction wherever possible. If physcial limitations of the test setup make this impossible or unsafe, a physical limitation on the amount of yaw motion is permitted.

(5) *Data analysis requirements.* Performance testing shall be conducted over a range of wind speeds including, but not limited to, the range specified in paragraph (d)(1) (Power Output Curve). The bin width shall not be greater than 1.0 meters per second (2.2 miles per hour). The wind duration at each bin in the interval must satisfy at least one of the following conditions:

(i) The wind speed must be recorded in the given bin for a duration not less than 5 percent of the total test duration; or

(ii) The wind speed must be observed in the given bin for at least one minute; or

(iii) The wind speed in the given bin must have been recorded for at least 100 independent observations.

(6) Instrumentation. The instrumentation used to conduct the tests specified in this section shall meet the following requirements:

(i) The anemometer system used to measure wind speed shall have an error no greater than ±10 percent of the reading over the range 2 to 20 meters per second (4.5 to 45 miles per hour) and an anemometer distance constant equal to or less than 5 meters (16 feet).

(ii) Power output of the SWECS shall be measured or calculated from measured values with an error no greater than ±5 percent.

(iii) All readout or recording devices shall have an error no greater than ±5 percent of reading, a frequency response of at least 0.1 Hertz and shall be capable of recording or displaying essentially simultaneous wind speed and power output data.

(iv) The anemometer shall be located not less than one and not more than 10 SWEC rotor diameters from the center of the SWECS rotor if the anemometer is not located at or near the height of the center of the SWECS rotor (±1.5 rotor radii). The anemometer shall be located not less than 3 and no more than 10 SWECS rotor diameters from the center of the SWECS rotor if the anemometer is at or near the height of the center of the SWECS rotor (±1.5 rotor radii) and in no case shall tests be performed when the anemometer is located downwind from the rotor (when the wind direction is within ±45 degrees of line drawn from center of the rotor to the anemometer). All wind speed values must be corrected to the height at the center of the SWECS rotor using the locally measured wind shear profile or, if wind shear measurements are not available, the data shall be corrected using the following equation:

$$V_r = V_m \left(\frac{Z_r}{Z_m}\right)^{1/7}$$

Where:

Vr = Corrected wind speed (meters per second or miles per hour) at Zr (meters or feet).

Vm = Measured wind speed (meters per second or miles per hour) at Zm (meters or feet).

Zr = Height (meters or feet) above ground level to the center of the SWECS rotor.

Zm = Height (meters or feet) above ground level where the reference wind speed (Vm) (meters per second or miles per hour) was measured.

(v) Electrical power instrumentation shall measure the power delivered from the SWECS, minus any power used by the SWECS for such components as control subsystems and power conditioning equipment.

(vi) All working instruments used in the conduct of these tests shall be calibrated (per the instrument manufacturer's recommendations) to reference standards which are traceable to the National Bureau of Standards. The calibration may be accomplished by the instrument manufacturer or any other organization which has appropriate experience and equipment to accomplish the calibration process. Further, during the conduct of any required tests, the instruments being used shall have been calibrated within the designated calibration time interval recommended by the instrumentation manufacturer.

(7) *Testing organization certification.* The organization conducting any test outlined in this standard shall self-certify that it has met all the testing requirements stated in this standard. A signed statement of compliance with this standard shall be kept on file with the SWECS manufacturer and the organization that conducted the test for a period of 5 years.

§ 456.706 [Deleted]

4. 10 CFR Part 456 is amended by deleting § 456.706.

5. 10 CFR 456.812 is amended by adding paragraph (e) to read as follows:

§ 456.812 Standards for caulks and sealants, water heater insulation, heating/air-conditioning duct insulation and pipe insulation.

* * * * *

(e) Material standard for pipe insulation. Pipe insulation shall conform to:

(1) Federal Specification HH–I–558B Federal Specification for Mineral Fiber Batts and Blankets—Industrial Type; or

(2) Federal Specification HH–I–573B, Organic Cellular Flexible Unicellular Pipe Covering.

In addition, pipe insulation in its end-use configuration shall have a flame spread of no more than 150 when tested in accordance with ASTM E–84.

6. 10 CFR § 456.814 is amended by adding paragraph (f) and (g) to read as follows:

§ 456.814 Standards for furnace efficiency modifications.

* * * * *

(f) *Interim material standard for automatic intermittent pilot ignition systems (IID's) for gas-fired heating systems.* (1) All IID's shall conform to "Proposed American National Standard for Automatic Intermittent Pilot Ignition Systems for Field Installation" dated October 1979.

(2) All IID's shall contain a label stating: "This device should be installed only by an approved contractor."

(3) Manufacturers of IID's shall provide to all persons approved for installing the device interconnection or wiring diagrams which match the wiring configuration found on the applicance on which the IID is to be installed.

(g) *Material standard for vent dampers for gas-fired systems.*

* * * * *

(3) Wiring diagrams and instructions.

(i) Manufacturers of electrical automatic vent dampers and thermal vent dampers having electrical connections shall provide to all persons approved for installing the device an interconnection or wiring diagram(s) which is representative of the wiring configuration found on the appliance on which the damper is to be installed.

(ii) Manufacturers of mechanical automatic vent dampers shall provide to all persons approved for installing the device, an interconnection diagram which is representative of the piping configuration found on the appliance on which the damper is to be installed.

(iii) A verification-of-installation card to be returned to the manufacturer by the installer. The following information shall be requested on the card:

(A) Name of Installer.

(B) Name of Installer's Company.

(C) Name and Address of Purchaser.

(D) Model and Type of Device Installed.

(E) Date of Installation.

8. 10 CFR 456.905(d)(1) is amended by adding subparagraph (ii) to read as follows:

§ 456.905 Standard practice for the installation of loose fill insulation.

* * * * *

(d) *Installation Procedures.*

(1) *General*

* * * * *

(ii) Structural damage can be caused by excessive pressures during the installation or can result from installing insulation in constructions too weak to support the imposed load. Install insulation only so as not to cause any of the following conditions:

(A) Separation of finish materials from joists or studs;

(B) Cracking of materials or opening of joints between boards;

(C) Deflection of more than 1/200 of the joist or stud spacing.

9. 10 CFR Part 456 is amended by adding § 456.914 to read as follows:

§ 456.914 Standard practice for the field installation of electrically-operated, mechanically-actuated and thermally-actuated automatic vent dampers for use with existing gas-fired central furnaces and low-pressure hot-water boilers.

(a) *Scope.* (1) This practice is intended to achieve a safe installation of electrically-operated, mechanically-actuated, or thermally-actuated, automatic vent dampers on existing gas-fired central furnaces and low-pressure hot water boilers hereinafter referred to as "the heating appliances" or as simply "the appliances." A safe installation requires knowledge and equipment that may be possessed only by qualified installers. (A qualified installer is a person who has specialized training and a working knowledge of the applicable codes and regulations, tools, equipment, and methods necessary for the safe installation of automatic vent dampers for gas-fired appliances and the necessary understanding of the fundamentals of gas-fired heating systems (see § 456.314)). *An improper installation could result in injury or death from the venting of exhaust gases, including carbon monoxide, into the residence.* Electrical shock to the installer could also result. This practice outlines the procedure to be followed. No procedure can anticipate all situations. Accordingly, in some cases deviation from this procedure may be necessary for a safe installation. For this reason, *only qualified installers shall perform the installation.*

(2) A safe installation requires that safe vent damper and heating appliance designs be used. Therefore, the vent damper and heating appliance designs must, as a minimum, be listed by a nationally recognized testing laboratory and must meet State and local codes and the appropriate nationally recognized standards. These standards are ANSI Z21.66–1977, American National Standard for Electrically-Operated Automatic Vent Dampers Devices for Use with Gas-Fired Appliances; ANSI Z21.67–1978, American National Standard for Mechanically-Actuated Automatic Vent Damper Devices for Use with Gas-Fired Appliances; ANSI Z21.68–1978, American National Standard for Thermally-Actuated Automatic Vent Damper Devices for Use with Gas-Fired Appliances; ANSI Z21.13–1977, American National Standard for Gas-Fired Low Pressure Steam and Hot Water Boilers; ANSI Z21.47–1978, American National Standard for Gas-Fired Gravity and Forced Air Central Furnaces.

Note.—Often the authority having jurisdiction over the installation of gas equipment in a locality will have requirements that must be met before equipment is considered safe and is approved for use in that locality. Often equipment must be listed before it is approved. Listed equipment is that included in a list published by a nationally recognized testing laboratory that maintains periodic inspection of the production of equipment that it lists. Each listing states that the equipment either meets nationally recognized standards or has been tested and found suitable for use in a specified manner. Listed vent dampers and heating appliances are intended to include only safe designs. Using a listed vent damper on a listed heating appliance does not necessarily imply a safe retrofitted system, however. Not all listed vent dampers are compatible with all listed heating appliances. In addition, the safety of a retrofitted system depends not only on the safe designs of the existing heating appliance and vent damper but also on the manner in which the vent damper is installed.

(3) The installer shall ensure that mechanically-actuated vent dampers are only installed on appliances with which they are compatible. Compatibility is to be determined by comparing the appliance as found with diagrams furnished by the damper manufacturer showing interconnections among the heating appliance, the damper, the motive force and the control circuits. Electrically-operated vent dampers and thermal vent dampers with electrical connections shall only be installed on appliances where the wiring diagrams supplied by the vent damper manufacturer show the device to be compatible with the appliance. If a wiring or interconnection diagram is not

supplied by the vent damper manufacturer which duplicates the heating system on which the installation is desired, the installation must not be attempted.

(4) This practice is intended only for use with individual, automatically operated, natural gas-fired, hot-air (forced or gravity) furnaces and gas-fired low-pressure, hot water boilers equipped with draft hoods.

(5) Because vent dampers save energy by reducing the flow of heated air up the vent during periods when the main burner of the heating appliance is off, do not install vent dampers in areas that are essentially at outdoor temperatures, such as unheated attics, crawl spaces, or basements with openings directly to the outdoors.

(6) Because vent capacities are reduced when the difference between indoor and outdoor temperatures are the least, and, generally, when wind velocities are low, it is desirable that all checks of venting capacity or draft hood spillage be conducted when the outside temperature is above 65°F and the wind velocity is less than 10 mph. Venting may be particularly dependent on wind conditions in certain special situations. Extra caution must be exercised in these special situations that include exposed locations in high wind areas; locations in very hilly terrain; difficult constructional features for venting purposes, such as high pitched roofs; and neighborhoods with sharply varying building heights. In these situations, wind currents directed at the top of the chimney may cause downdrafts at times. If any of these situations are suspected of causing draft problems, it will be necessary to conduct the vent capacity or draft hood spillage checks on several days under various wind conditions.

(7) At any point, if it is determined that there is a condition that could result in unsafe operation of the heating system, the appliance must be shut off, the owner and the authority having jurisdiction informed of the required repairs, and the repairs made before continuing with the installation.

(8) This practice requires the following items be followed in order:

(i) Pre-Installation Procedure in paragraph (b) of this section;

(ii) General Installation Procedure in paragraph (c) of this section;

(iii) Post-Installation Procedure in paragraph (d) of this section.

(b) *Pre-Installation Procedure.* (1) This pre-installation procedure is to determine whether a gas heating appliance is properly installed and is in a safe condition for continuing use. Perform this procedure before making any attempt to install a vent damper, and do not install a vent damper on an appliance if the determinations required below cannot be made.

(2) Determine with suitable instruments, that there is no detectible concentration of combustible gas and/or carbon monoxide in the vicinity of the heating appliance. The absence of combustible gas is indicated by a reading less than 20 percent of the lower explosive limit on the appropriate instrument or by a smell test indicating complete freedom from odor of odorized natural gas. (The lower limit for detecting fuel gas by smell is approximately 20 percent of the lower explosive limit). The absence of CO is indicated by a reading of less than 50 ppm which is the lowest marking on several CO test instruments in common use.

(3) Determine that the heating system installation meets the requirements of all applicable codes and regulations. The heating system installation should at least meet the requirements of the American National Standard Fuel Gas Code, ANSI Z223.1–1974 (NFPA No. 54–1974) Part 1, Installation of Gas Piping and Gas Equipment on Nonindustrial Premises.

(4) Conduct a gas leakage test of the appliance piping and control system downstream of the shut-off valve in the supply line to the appliance. *Do not* use a flame or other source of ignition to check for gas leaks.

(5) Inspect the venting system to determine that the cross-sectional area of the vent connector is not less than the area of the draft hood outlet (the chimney side of the draft hood) and that the area of the vent is not less than the area of the largest, connected, draft hood outlet plus 50 percent of the areas of additional connected, draft hood outlets. If these criteria are not met, the vent system must be in accordance with the National Fuel Gas Code (ANSI Z223.1–1974) paragraphs 1.5.6.3 and 1.5.8.3. Determine that there are no manually adjustable dampers in the vent system. Also visually inspect for positive horizontal pitch (not less than ¼-inch/foot). Determine through an inspection of the entire interior of the vent system that there is no blockage, restriction, leakage, corrosion, etc., which could cause an unsafe condition. If this inspection is not performed, an outdoor temperature above 65°F and a wind velocity of less than 10 mph are mandatory during all tests for venting capacity or draft hood spillage.

(6) Determine that the outside termination of the vent is satisfactory (see National Fuel Gas Code, ANSI Z223.1–1974, 1.5.5.2 and 1.5.6.3). Determine that the chimney is in good condition, and is either a lined masonry chimney or an approved Type B or Type L vent or a factory-built chimney. Do not install a vent damper in a heating system using any other chimney type, including unlined masonry chimneys and uninsulated, single-wall metal pipes. Determine that the vent connector does not project into the chimney.

(7) Determine that the comfort thermostat(s) is in satisfactory operating condition. Check for excessive dust, corrosion, pitted contacts, and cracked or broken base or housing. Note the comfort thermostat setting so it can be reset after the installation is completed. Then adjust the thermostat for continuous operation. Determine that the burner input is in accordance with the heating appliance manufacturer's instructions.

(8) Visually determine that the main burner gas is burning properly and that there is no floating, lifting, or flashback. Adjust the primary air shutter(s) as required. If the appliance is equipped with flame modulation, check for proper main burner operation at low and high flame. Observe burning for evidence of plugged burners, improper flame alignment, combustion product leakage, and improperly adjusted pilot lights.

(9) Shut off all gas to the appliance using the shut-off valve in the supply line to the appliance. Shut off the main burners of all other appliances located within the same room or connected to the same vent. Note the settings of any thermostats that are to be changed so they can be reset after the installation is completed.

(10) Determine that there is sufficient combustion air. In unconfined spaces in buildings of conventional frame or masonry construction, infiltration normally is adequate to provide air for combustion, ventilation, and dilution of flue gases. If the unconfined space is within a building of unusually tight construction, air must be obtained from outdoors or from spaces freely connected with outdoors. Permanent openings having a total free area of not less than one square inch per 5,000 Btu/hr of total input rating of all appliances must be provided. For appliances located within confined areas, follow the recommendations of the National Fuel Gas Code (ANSI Z223.1–1974) paragraphs 1.3.4.3 through 1.3.4.6. Check any ducts for obstructions and other unsafe conditions.

(11) Shut off electricity to the heating appliance. Determine that all electrical wiring at the appliance has no loose connections, charred insulation, cracked or worn insulation, and potential shorting to ground. Determine that fuses

and circuit breakers are of correct size and that wires are of correct size for the appliance. Turn electricity back on.

(12) Determine that all appliance burners and gas manifolds are not blocked or corroded. Determine that the burner is properly aligned and shows no evidence of burner misalignment and in particular no evidence of hot spots on the heat exchanger.

(13) *Applicable only to furnaces:* Determine that the heat exchanger has no cracks, openings, leakage deposits, excessive corrosion, and/or evidence of excessively hot spots. Determine that the recirculating air section of the appliance has no flammable materials or materials that could emit toxic fumes on being heated.

(14) *Applicable only to boilers:* Determine that there is no evidence of water or combustion product leaks.

(15) Insofar as is practicable, close all building outside doors and windows. Turn on all exhaust fans (range hood, bathroom exhausts, etc.) so they will operate at maximum speed. Turn on any clothes dryers vented to the outside. Do not operate summer exhaust fans. Make certain that any fireplace(s) is not operating. Close fireplace dampers.

(16) For the following vent system checks, the worst venting conditions that may reasonably exist should be duplicated. The worst venting conditions exist when the space occupied by the heating appliance is at the lowest pressure. If there are exhaust fans in the same room as the heating appliance or if there are no exhaust fans in the residence, the lowest pressure will probably occur when the doors to other spaces of the building are closed. If there are exhaust fans in other rooms, the pressure will probably be lowest when doors connecting these rooms with the heating appliance space are open. Based on these considerations, open or close doors to other spaces of the building as required to produce the lowest pressure in the space occupied by the heating appliance. If it is not known which condition results in the lowest pressure, perform paragraphs 16 through 20 twice—once with doors to other spaces of the building open and once with the doors closed. After the appliances have been off for at least 30 minutes, turn on the gas to the appliance being inspected and place it in operation. *Follow the appliance manufacturer's lighting instructions.* Adjust the comfort thermostat for continuous, full-burner appliance operation.

(17) Test for spillage at the draft hood relief opening at 2 minutes of main burner operation. This short time is necessary if the test is to simulate a reasonably severe condition. Use a device that will produce unpressurized flame or smoke, such as a match flame or cigarette smoke. Considerable care must be used to determine if flow is in or out of the draft hood Adequate lighting must be provided for observation and the flow through all areas of the draft hood opening(s) must be carefully observed. After testing for spillage at the heating appliance draft hood, also test for spillage at other draft hoods connected to the same vent.

(18) Shut off the main burner and let the appliance cool for at least 15 minutes.

(19) Turn on all other fuel-burning appliances that are within the same room or that are connected to the same vent so they will operate at their full inputs. Turn on the appliance being inspected so that it will operate at its full rated input.

(20) Repeat paragraph (17).

(21) At 5 minutes of main burner operation, measure the flue gas temperature and carbon monoxide (CO) concentration at a point one inch before the inlet to the draft hood at the center of the flue passage(s). This temperature should be at least 200°F. This temperature is necessary to limit condensation within the vent. This temperature should also be less than 550°F, the vent damper maximum design temperature. The maximum carbon monoxide concentration should be 0.04 percent (400 ppm), as permitted for new heating appliances. If the heating appliance is equipped with flame modulation, rerun the minimum (200°F) flue gas temperature test and the CO test at the lowest flame conditions.

(i) *For installation of thermally-actuated vent dampers only:* Measure the temperature at the center of the vent connector six inches after the outlet of the draft hood. The vent gas temperature must be at least 370°F but less than 550°F. The damper design has been tested for flow restriction at 370°F.

(ii) *For installation of electrically-operated or mechanically-actuated vent dampers only:* If the vent damper is not installed with a redundant gas valve, it must be equipped with a damper-closing temperature control, and the temperature at the center of the vent connector six inches after the outlet of draft hood must be measured. This damper-closing temperature control is intended to keep the damper open whenever the main burner is operating even if there is a malfunction and the comfort thermostat is not calling for heat. The vent gas temperature must be more than 375°F under normal conditions to ensure that the damper-closing temperature control will function properly (i.e., keep the damper open) under an abnormal condition of restricted fuel gas input. If the vent gas temperature at full output is not above 375°F, do not install a vent damper with a damper-closing temperature control.

(22) Return doors, windows, exhaust fans, fireplace dampers, and other appliances to their previous conditions of use.

(23) Determine that the pilot(s) is burning properly and that main burner ignition is satisfactory by turning the main power supply switch for the heating appliance off and on. Test the pilot safety device to determine if it is operating properly by extinguishing the pilot burner(s) when the main burner is off and determine that the main gas valve does not open upon a call for heat beyond the safety shut off time specified by the automatic gas ignition device manufacturer. If this time is not known, a safety shut off time of one minute must be met. Relight the pilot(s) after this time check.

(24) *Applicable only to furnaces:* Check both the limit control and the fan control to determine that they operate within the heating appliance manufacturer's specifications.

(25) *Applicable only to hot water boilers:* Test low-water cutoffs, automatic-feed controls, high-pressure limit controls, high-temperature-limit controls, relief valves, water pumps, and the circulating system to determine that they are operating within the manufacturer's specifications.

(c) *General Installation Procedure.*

(1) The general installation procedure is to be used in conjunction with installation instruction supplied by the automatic vent damper manufacturer to aid in safely installing a vent damper on an existing appliance. At any point, if it is determined that there is a condition that could result in unsafe operation of the heating system, the appliance must be shut off, the owner and authority having jurisdiction informed of the necessary repairs, and the repairs made before continuing with the installation.

(2) Ensure that the damper manufacturer has supplied an interconnection or wiring diagram which matches the wiring configuration found on the appliance on which the damper is to be installed. Determine that the heating system and vent damper are listed and approved models. Ensure that the damper and other materials are in good condition and free of damage resulting from shipping or other causes and ensure that all parts are included. Determine if the vent damper includes a damper-closing temperature control. On any damper with electrical connections ensure that the required voltage of the

damper is compatible with the voltage of the control circuit of the heating appliance. Determine that the heating appliance automatic gas valve does not have a manual override feature which would permit operation of the heating appliance while the damper is in the closed position or while any damper safety system is not operational. If a valve with such an override feature is found, the manual override feature must be removed or the valve replaced before proceeding with installation of the damper.

For installation of mechanically-actuated vent dampers only: Determine that the range of available motive force (gas pressure, water pressure, etc.) is within the vent damper manufacturer's specified operating range.

(3) Shut off all gas and electricity to the heating appliance. To shut off the gas, use the shut-off valve in the supply line to the appliance. To shut off the electricity, use the main power switch for the heating appliance.

(4) Install the automatic vent damper in strict accordance with the manufacturer's installation instructions. Make certain that the damper is located in the portion of the venting system that serves only the appliance on which the damper is being installed and that the damper is between the appliance draft hood and the first branch (if any) in the vent system. The vent damper must be installed *after* the draft hood, that is, between the draft hood and the chimney. If the damper is equipped with a damper-closing temperature control or is a thermal damper, the damper must be located within three diameters of the draft hood. The inlet size of the vent damper must not be less than the outlet size of the draft hood. *Do not add any components (such as relays) not specified by the vent damper manufacturer.*

(5) Determine that the vent system is adequately supported to hold the additional weight of the vent damper without sagging. This may require band iron straps attached overhead and/or self-tapping screws and at each joint. Visually inspect the modified venting system for proper horizontal pitch (not less than ¼-inch/foot).

(6) *For installation of electrically-operated or mechanically-actuated vent dampers only:* If the vent damper is not equipped with a damper-closing temperature control, an additional approved automatic gas valve must be installed in accordance with the vent damper manufacturer's installation instructions. This gas valve is intended to shut off gas flow if the other gas valve should fail to close completely. It may be either an additional valve (without pilot features) located in the gas line between the existing valve and the main burner or a replacement valve that includes two main gas valves within a single unit. Follow the vent damper manufacturer's instructions. After installing a new gas valve, purge air from the affected gas lines and conduct a gas leakage test of the appliance piping and control system downstream of the shut-off valve in the supply line to the appliance.

(7) Make sure electrical connections are tight and wires are clear of high-temperature locations and properly supported. Route wires to minimize the possibility of their being damaged. All wiring must meet the requirements of all applicable codes and regulations. As a minimum, wiring must meet the requirements of the National Electrical Code, NFPA 70–1975.

(d) *Post-Installation Procedure.* (1) This post-installation procedure is to determine that the automatic vent damper is properly installed and that the retrofitted system is in a safe condition for use. At any point, if it is determined that there is a condition that could result in unsafe operation of the heating system, the appliance must be shut off, the owner and authority having jurisdiction informed of the necessary repairs, and the repairs made before continuing.

(2) Turn on electrical power to the heating appliance.

(3) *For installation of electrically-operated or mechanically-actuated vent dampers only:* By operating the furnace burner through the control circuit, determine that the damper operates properly and is correctly sequenced with the heating appliance's operating controls. The damper should be nearly open before the automatic gas valve(s) opens and the damper should remain open while there is a call for main burner operation. The automatic gas valve(s) should close when the damper begins to close. The automatic gas valve(s) and the damper should remain closed when there is no call for heat. The damper must open and close freely without evidence of the interference or binding. Also determine that the automatic gas valve(s) and damper closes fully.

Note.—If a boiler automatic gas valve(s) is sequenced by an aquastat, determine that the damper has opened fully or is nearly open prior to the opening of gas valve(s).

(4) If the damper has electrical current requirements, determine the amperage draw of the all circuits served by the heating appliance transformer (including such items as thermostats, humidifiers, controls for electronic filters, the vent damper, etc.) Check the heating appliance transformer for adequate capacity. If the transformer does not have adequate capacity, it must be replaced.

(5) Check the setting of any heat anticipator in the comfort thermostat and readjust as necessary.

(6) Insofar as is practical, close all building outside doors and windows. Turn on any exhaust fans (range hood, bathroom exhausts, etc.) so they will operate at maximum speed. Turn on any clothes dryers vented to the outside. Do not operate summer exhaust fans. Make certain that any fireplace(s) is not operating. Close fireplace dampers.

(7)(i) *For installation of thermally-actuated vent dampers only:* For the following vent system checks, the worst venting conditions that may reasonably exist should be duplicated. The worst venting conditions exist when the space occupied by the heating appliance is at the lowest pressure. If there are exhaust fans in the same room as the heating appliance or if there are no exhaust fans in the residence, the lowest pressure will probably occur when the doors to other spaces of the building are closed. If there are exhaust fans in other rooms, the pressure will probably be lowest when doors connecting these rooms with the heating appliance space are open. Based on these considerations, open or close doors to other spaces of the building as required to produce the lowest pressure in the space occupied by the heating appliance. If it is not known which condition results in the lowest pressure, perform the work specified in paragraphs 6 through 8 of this document twice—once with doors to other spaces of the building open and once with the doors closed. After the appliances have been off for at least 30 minutes, turn on the gas to the appliance on which the damper has been installed and place the appliance in operation. *Follow the manufacturer's lighting instructions.* Adjust the comfort thermostat for continuous full burner appliance operation.

(ii) *For installation of electrically-operated and mechanically-actuated vent dampers only:* Turn on the gas to the heating appliance and place it in operation. *Follow the manufacturer's lighting instructions.* Adjust the comfort thermostat for continuous, full-burner operation.

(8) Test for spillage at the draft hood relief opening at 2 minutes of main burner operation. This short time is necessary to simulate a reasonably severe test. Use a device that will produce unpressurized flame or smoke, such as a match flame or cigarette smoke. Considerable care must be used

to determine if flow is in or out of the draft hood. Adequate lighting must be provided for observation and the flow through all areas of the draft hood opening(s) must be carefully observed.

(9) *For installation of thermally-actuated vent dampers only:* If the appliance is equipped with flame modulation, repeat paragraphs 6 and 7 at the lowest flame conditions.

(10) Visually determine that main burner gas is burning properly and that there is no floating, lifting, or flashback. If the appliance is equipped with flame modulation, determine that proper main burner operation at low and high flame is maintained.

(11) Determine that the pilot(s) is burning properly and the main burner ignition is satisfactory by turning the main power supply switch for the heating appliance off and on. Test the pilot safety device to determine that it is operating properly by extinguishing the pilot burner(s) when the main burner is off and determining that the main gas valve does not remain open upon a call for heat beyond the safety shut off time specified by the automatic gas ignition device manufacturer. If this time is not known, a safety shut off time no longer than 1 minute must be met. Relight the pilot(s) after this check.

(12)(i) *For installation of thermally-actuated vent dampers only:* Cycle the heating appliance through at least three normal operating cycles. The damper must open and close properly without evidence of interference or binding. Determine that the damper closes fully. The damper may not close immediately with the thermostat but after a period of time, it should close.

(ii) *For installation of electrically-operated and mechanically-actuated vent dampers only:* Cycle the heating appliance through at least three normal operating cycles. Determine that the damper is nearly fully open before the main burner gas flow begins and that the main burner gas flow stops as or before the damper begins to close. Damper must open and close freely without evidence of interference or binding. The damper must close fully. If the vent damper includes a damper-closing temperature control, the damper may not close immediately with the thermostat. Check this by operating the heating appliance for 10 minutes. Then lower the setting on the comfort thermostat to shut off the main burner gas flow. The damper should remain open for a period of time and then close. If the heating appliance is equipped with flame modulation and the vent damper includes a damper-closing temperature control, operate the heating appliance for 10 minutes at the lowest flame conditions. Then reduce the comfort thermostat to shut off the main burner gas flow. The damper should remian open for a period of time and then close.

(13) *Applicable only to furnaces:* If the furnace electrical circuit has been modified during vent damper installation, check both the limit control and the fan control to determine that they operate within the heating appliance manufacturer's specifications.

(14) *Applicable only to boilers:* If the boiler electrical circuit has been modified during vent damper installation, test low-water cutoffs, automatic-feed controls, high-temperature-limit controls, water pumps, and the circulating system to determine that they are operating within manufacturer's specifications.

(15) *For installation of thermally-actuated vent dampers only:* Return doors, windows, exhaust fans, fireplace dampers, other appliances, and comfort thermostat(s) to their previous conditions of use.

(16) Fill in the label on the damper with the name and address of the installing company, the name of the individual installer, and the date of the installation.

(17) Complete the verification-of-installation card supplied by the vent damper manufacturer pursuant to § 456.814 and return this promptly to the manufacturer.

(18) Leave the vent damper manufacturer's instructions in a conspicuous location near the heating appliance and advise the resident to read these instructions especially for observations to be performed by the resident.

(19) As required by codes and regulations, notify the appropriate authority that the installation has been completed and turn off the heating appliance until any required inspection is completed.

10. 10 CFR Part 456 is amended by adding § 456.915 to read as follows:

§ 456.915 Interim standard practice for the installation of automatic intermittent pilot ignition devices (IID's).

(a) *Scope.* This practice provides minimum requirements for the installation if IID's for gas-fired furnaces.

(b) *Requirements.* Installation shall meet the requirements of Proposed American National Standard for Automatic Intermittent Pilot Ignition Systems for Field Installation, October 1979 (see Appendix II (b)(1)(A) for availability).

11. 10 CFR Part 456 is amended by adding § 456.916 to read as follows:

§ 456.916 Standard practices for the installation of caulks and sealants.

(a) *Scope.*

(1) These practices apply to the on-site installation of caulks and sealants used to control rain water leakage and major air infiltration through building walls.

(2) These practices do not apply to the sealing of minor cracks at the building's exterior.

(b) *Material selection, joint preparation, and installation procedures.* The type of caulk or sealant chosen for a given application depends on the composition of the adjacent materials, temperature fluctuation, exposure to direct sunlight, width and depth of the crack or joint to be sealed and movement in the joint. Select caulks and sealants, prepare the joint and substrata, and install the material in conformance with the following standards and provisions:

(1) Putty and Oil and Resin Base Types: ASTM C–797–75, Standard Recommended Practices and Terminology for Use of Oil-and Resin-Based Putty and Glazing Compounds.

(2) Acrylic (Solvent Type) and Butyl Rubber: ASTM C–804–75, Standard Recommended Practices for Use of Solvent-Release Type Sealants.

(3) Latex Sealing Compounds: ASTM C–790–74, Standard Recommended Practices for Use of Latex Sealing Compounds.

(4) Chlorosulphonated Polyethylene, Polysulfide-Single Component, Polysulfide-Multi-Component, Polyurethane-Single Component, Polyurethane-Multi-Component and Silicone: Follow the provisions relating to application and use included in the applicable Federal Specifications (see Table 3, § 456.812).

12. 10 CFR Part 456 is amended by deleting Appendix II and replacing it with the following:

Appendix II Part 456—Standards Incorporated by Reference

(a) Incorporation by reference of material and installation standards. The material and installation standards identified herein are hereby incorporated by reference into this Part as though set forth in full herein, pursuant to 5 U.S.C. § 552(a).

Incorporation by reference of material and installation standards in 10 CFR Part 456 was approved by Director of the Federal Register, November 1, 1979 and September 17, 1980.

(b) Statement of availability.

(1) Copies of the standards set out in paragraph (d) of this Appendix may be obtained at the following addresses:

(A) American National Standards Institute (ANSI), 1430 Broadway, New York, New York 10018; except that the "Proposed American National Standard for Automatic Intermittent

Pilot Ignition Systems for Field Installations" may be obtained from Mr. F. G. Hammaker, Administrative Secretary, 721 American Materials Standard Committee, 8501 E. Pleasant Valley Road, Cleveland, Ohio 44131; (216) 524–4990.

(B) American Society of Testing and Materials (ASTM), 1910 Race Street, Philadelphia, PA 19103.

(C) National Fire Prevention Administration (NFPA), 470 Atlantic Avenue, Boston, MA 02210.

(D) Environmental Protection Agency (EPA), CERI–SB–53, Cincinnati, Ohio 45268.

(E) U.S. Department of Commerce, National Bureau of Standards (NBS), Washington, D.C. 20234.

(F) Federal Specification: Customers Service, Publication and Forms Center, 5801 Tabor Avenue, Philadelphia, PA 19120.

(G) Building Officials and Code Administrators (BOCA), International Inc., 17926 S. Halsted Street, Chicago, IL 60430.

(H) Underwriter Laboratory (UL) Publication Stock, 333 Pfingston Road, Northbrook, IL 60612.

(I) Fir and Hemlock Door Association (FHDA), Yeon Building, Portland, OR 92704.

(J) Department of Housing and Urban Development (HUD), Office of Technical and Credit Standards, Room 6156, 451 Seventh Street, S.W., Washington, D.C. 20410.

(K) Sandia Laboratory, Environmental Research Division—5333, Albuquerque, NM 87185.

(L) Consumer Product Safety Commission (CPSC), 1750 K Street, N.W., Washington, D.C.

(M) National Woodwork Manufacturers Association (NWMA) 205 W. Toughy Avenue, Parkridge, IL 60068.

(2) Copies of all standards incorporated by reference are available for inspection in the DOE Reading Room, Room 5B–180, Forrestal Building, 1000 Independence Avenue, S.W., Washington, D.C., between the hours of 8:00 a.m. and 4:30 p.m., Monday through Friday.

(c) Changes in material and installation standards. Any change to any material or installation standard will be made in accordance with statutory requirements for notice and public comment and with DOE policy for the adoption of rules. Notice of any proposed change will be published in the **Federal Register** and reflected as an amendment to the table in paragraph (d).

(d) Table of Standards incorporated by reference.

BILLING CODE 6450–01–M

Table of Standards

Number	Title	Date Approved	Section Reference	Address[1] Code
ANSI:				
ANSI/AAMA 1002.9-1977	"Voluntary Specification for Aluminum Combination Storm Windows for External Applications".	Nov. 1, 1979	§456.813.	A
ANSI/AAMA 1102.7-1977	"Voluntary Specifications for Aluminum Storm Doors"	"	§456.813.	A
ANSI/ASTM B 152-79	"Standard Specification for Cooper Sheet, Strip, Plate, and Rolled Bar".	Sept. 17, 1980 "	§456.810.	B
ANSI/ASTM B 446-75	"Standard Specification for Nickel-Chromium-Molybdenum-Columbium Alloy (UNS06625) Rod and Bar".	"	§456.810	B
ANSI/ASTM D 2156-65 (1975)	"ANSI Standard Method of Tests for Smoke Density in the Flue Gases from Distillate Fuels".	Nov. 1, 1979	§456.913.	B
ANSI Z21.13-1977	"Gas-fired Low Pressure Steam Hot Water Heating Boilers"	"	§456.814. & §456.914.	A
ANSI Z21.20-1979	"ANSI Standard for Automatic Gas Ignition Systems and Components".	"	§456.814.	A
ANSI Z21.47-1978	"ANSI Standard for Gas-fired Central Furnaces"	"	§456.814. & §456.914.	A
ANSI Z21.59-1974	"Gas-fired High Pressure Steam and Hot Water Heating Boilers".	"	§456.814.	A
ANSI Z21.66-1978	"ANSI Standard for Elctrically-Operated Automatic Vent Damper Devices for Use with Gas-fired Applicances".	"	§456.814. & §456.914.	A
ANSI Z21.67-1978	"ANSI Standards for Mechanically-Actuated Automatic Vent Damper Devices for Use with Gas-fired Appliances".	"	§456.814. & §456.914.	A
ANSI Z21.68-1978	"ANSI Standard for Thermally-Actuated Automatic Vent Damper Devices for Use with Gas-fired Appliances".	"	§456.814. & §456.914.	A
ANSI Z91.2-1976	"Performance Requirements for Automatic Pressure Oil Burners of the Mechanical Draft Type".	"	§456.814. & §456.913.	A
ANSI Z96.1-1978/UL 727	"Oil-fired Central Furnaces"	"	§456.814.	A/H

[1] Corresponds to address noted above where copies of standards can be obtained.

Number	Title	Date Approved	Section Reference	Address Code
ANSI:				
ANSI Z96.2-1974/UL 296	"Oil Burners"	Nov. 1, 1979	§456.814.	A/H
ANSI Z96.3-1975/UL 726	"Oil-fired Boiler Assemblies"	"	§456.814.	A/H
ANSI/NWMA I.S. 2-73	"Industry Standard for Wood Windows"	"	§456.813.	M
ANSI/NWMA I.S. 5-73	"Ponderosa Pine Doors"	"	§456.813.	M
ASTM:				
ASTM C-177-76	"Standard Test Method for Steady State Thermal Transmission Properties by Means of the Guarded Hot Plate".	Sept. 17, 1980.	§456.810.	B
ASTM C-236-66 (Reapproved 1971)	"Standard Test Method for Thermal Conductance and Transmittance of Built-up Sections by Means of the Guarded Hot Box".	"	§456.810.	B
ASTM C-516-75	"Standard Specification for Vermiculite Loose Fill"	Nov. 1, 1979	§456.806.	B
ASTM C-518-76	"Standard Test Method for Steady State Thermal Transmission Properties by the Means of Heat Flow Meter".	Sept. 17, 1980	§456.810.	B
ASTM C-520-65 (Reapproved 1975)	"Standard Method for Density of Granular Loose-fill Insulation"	Nov. 1, 1979	§456.806 & §456.807.	B
ASTM C-570-72	"Specification for Oil and Resin Based Caulking Compound for Building Contruction".	"	§456.812.	
ASTM C-578-69	"Standard Specification for Preformed, .Block-Type Cellular Polystyrene Thermal Insulation".	"	§456.808.	B
ASTM E-737-80	"Standard Practice for the Installation of Storm Windows, Replacement Windows, Multi-Glazing, Storm Doors and Replacement Doors".	Sept. 17, 1980	§456.911.	B
ASTM C-755-73	"Standard Recommended Practice for Selection for Vapor Barriers for Thermal Insulation".	Nov. 1, 1979	§456.	B
			§456.903.	B

Number	Title	Date Approved	Section Reference	Address Code
ASTM:				
ASTM C-790-74	"Standard Recommended Practices for Use of Latex Sealing Compounds".	Sept. 17, 1980 ~~Nov. 1, 1979~~	§456.916.	B
ASTM C-797-75	"Standard Recommended Practices and Termonology for Use of Oil- and Resin-Based Putty and Galzing Compunds".	"	§456.916.	B
ASTM C-804-75	"Standard Recommended Practices for Use of Solvent Release Type Sealants".	"	§456.916.	B
ASTM C-834-76	"Specification for Latex Sealing Compounds"	Nov. 4, 1979	§456.812.	B
ASTM D-257-78	"Test for DC resistance or Conductance of Insulating Materials".	Sept. 17, 1980	§456.810.	B
ASTM D-1622-63 (Reapproved 1975)	"Standard Method of Test for Apparent Density of Rigid Cellular Plastics".	"	§456.810.	B
ASTM E-84-79B	"Standard Test Method for Surface Burning Characteristics of Building Materials".	Nov. 1, 1979	§456.808. & §456.899; §456.810. & §456.812.	B
ASTM E-96-66 (Reapproved 1972)	"Standard Test Method for Water Vapor Transmission of Materials in Sheet Form".	"	§456.805.	B
ASTM E-119-79	"Standard Methods of Fire Tests of Building Construction and Materials".	"	§456.906. & §456.907.	B
ASTM E-136-79	"Test for Non-Combustibility of Elementary Materials"	"	§456.905. & §456.906.	B
ASTM E-283-73	"Standard Test Method for Rate of Air Leakage Through Exterior Windows, Curtain Walls and Doors".	"	§456.813.	B
ASTM E-576-76	"Standard Test Method for Dew/Frost Point of Sealed Insulating Glass Units in Vertical Position".	"	§456.813.	B
ASTM G-1-72 (Reapproved 1979)	"Standard Recommended Practice for Preparing, Cleaning, and Evaluating Corrosion Test Specimens".	Sept. 17, 1980	§456.810.	B
BOCA:				
BOCA Research Report No. 72-23		Nov. 1, 1979	§456.813.	G

Number	Title	Date Approved	Section Reference	Address Code
EPA:				
EPA Report No. 600/2-75-069a	"Guidelines for Residential Oil Burner Adjustments"	Nov. 1, 1979	§456.913.	D
Federal Specifications:				
HH-I-515D (6/78)	"Insulation, Thermal (loose-fill for Pneumatic or Poured Application): Cellulosic or Wood Fiber".	"	§456.803; §446.804 &§456.805.	F
HH-I-524B (11/72 - Interim Amendment-, 1/76)	"Insulation Board, Thermal (Polystyrene)"	"	§456.808.	F
HH-I-530A (1971 and Interim Amendment 3, 5/76)	"Insulation Board, Thermal (Polyurethane and Polyiscocynurate)"	"	§456.809.	F
HH-I-558B (1971 and Interim Amendment 3, 5/76)	"Insulation Blocks, Boards, Blankets, Felts, Sleeving, and Pipe Fitting Coverings".	"	§456.812.	F
HH-I-573B (1968 and Interim Amendment, 1976)	"Insulation Thermal, (Flexible Unicellular Sheet and Pipe Covering)	Sept. 17, 1980	§456.812.	F
HH-I-574B (1974 and Interim Amendement 1, 9/76)	"Insulation, Thermal (Perlite)"	Nov. 1, 1979	§456.807.	F
HH-I-585C (1974 and Interim Amendment 1, 9/76)	"Insulation, Thermal (Vermiculite)"	"	§456.806.	F
HH-I-1030A (1973 and Interim Amendment 1, 9/76)	"Insulation, Thermal (Mineral Fiber for Pneumatic or Poured Application)".	"	§456.804. & §456.805.	F
HH-I-1252B (1976)	"Insulation, Thermal Reflective (Aluminum Foil)"	"	§456.810.	F
TT-S-001543A (1971)	"Sealing Compound, Silicone Rubber Base (for Caulking, Sealing, and Glazing in Buildings and Other Structures)."	"	§456.812.	F
TT-S-00227E (1969 and Amendment 3, 10/70)	"Sealing Compound, Elastomeric Type, Multi-Component (for Caulking, Sealing, and Glazing in Buildings and Other Structures)".	"	§456.812.	F
TT-S-001657 (COM-NBS) (1970)	"Sealing Compound, Single Component Butyl Rubber Base, Solvent Release Type (for Buildings and Other Types of Construction)".	"	§456.812.	F

Number	Title	Date Approved	Section Reference	Address Code
Federal Specifications:				
TT-S-00230C (COM-NBS) (1970 and Amendment 2, 10/70)	"Sealing Compound, Elastomeric Type, Single-Component, (for Caulking, Sealing, and Glazing in Buildings and Other Structures)".	Nov. 1, 1979	§456.812.	F
TT-C-00598C (COM-NBS) (1970)	"Caulking Compound, Oil and Resin Type, (for Building Construction)".	"	§456.812.	F
TT-P-00791B (GSA-FSS) (1969 and Amendment 2, 1970)	"Putty Linseed-Oil Type, (for Wood-Sash-Glazing)"	"	§456.812.	F
FHDA: FHDA 6-79	"Industry Standard for Douglas Fir, Western Hemlock, and Sitka Spruce Doors and Blinds".	"	§456.813.	I
HUD: HUD Intermediate MPS Supplement 4930.2-1977	"Solar Heating and Domestic Hot Water Systems"	"	§456.702; §456.703 & §456.704.	J
NBS: NBS/PS 26-70	"Rigid Polyvinyl-chloride Profile Extrusions"	"	§456.813.	E
NFPA:				
NFPA-31-1978	"1978-National Fire Code," Standard for the Installation of Oil and Burning Equipment"	"	§456.905; §456.906; §456.907; §456.909; & §456.913.	C
NFPA-54/ANSI Z223.1-1-1974	"1978-National Fire Code" National Fuel Gas Code	"	§456.905; §456.906; §456.907; §456.909; & §456.914.	C/A
NFPA-70-1978	"National Electric Code," 1978	Sept. 17, 1980	§456.914. & §456.705.	C
NFPA-211-1977	"National File Code" Standard for Chimneys, Fireplaces, and Vents			
	"Install of Gas Piping and Gas Equipment on Non-Industrial Premises"	Nov. 1, 1979	§456.905; §456.906; §456.907; §456.909; & §456.912.	C
Sandia Laboratories Report SAND 77-1375-1978	Performance Evaluation of Wind Energy Conversion Systems Using the Method of Bins".	Sept 17, 1980 ~~Nov. 1, 1979~~	§456.705.	K
UL: UL 599 3rd Ed.-1975, Amendments through 1978	"Standard for Heat Pumps"	Nov. 1, 1979	§456.814.	H

[FR Doc. 80-29217 Filed 9-23-80; 8:45 am]

BILLING CODE 6450-01-C

federal register

Wednesday
September 24, 1980

Part III

Council on Wage and Price Stability

Anti-Inflationary Price Standards

COUNCIL ON WAGE AND PRICE STABILITY

6 CFR Part 705

Anti-Inflationary Price Standards

AGENCY: Council on Wage and Price Stability.

ACTION: Interim final price standards.

SUMMARY: On July 8, 1980, the Council released a report titled, *The Pay/Price Standards Program: Evaluation and Third Year Issues* (45 FR 47052), soliciting public comments on the performance of the standards program to date and on future modifications of the pay and price standards. After considering these comments and receiving the recommendations of the Pay Advisory and the Price Advisory Committee, the Council is publishing price standards (Subparts A, C, and D of Part 705), to be effective October 1, 1980, or the end of a company's second program year, whichever is sooner. The new standards essentially extend the second-year price standards, although there are certain technical changes, which are discussed in detail in "Supplementary Information" below. Because the effective date is so soon, public comment is solicited on an expedited basis. Any changes suggested by the comments that are ultimately incorporated in the final standards will be effective as of October 1, but no one who relies on the standards set forth below will be found out of compliance with the final standards for the interim period.

DATES: The effective date of the revised Part 705 is October 1, 1980. Comments must be received on or before October 20, 1980.

ADDRESS: Written comments should be addressed to the Office of General Counsel, Council on Wage and Price Stability, 600–17th Street, N.W., Washington, D.C. 20506.

FOR FURTHER INFORMATION CONTACT:

Industries	Contact person	Telephone No.
Metals, machinery, and equipment.	Eugene Roberts	456-7784
Food, agriculture, and trade.	Steven Hiemstra	456-7740
Energy, chemicals, utilities, and transportation.	Larry Forest	456-7747
Construction and building materials.	Joseph Lackey	456-7156
Health insurance and other services.	Arthur Corazzini	456-7730

SUPPLEMENTARY INFORMATION:

Analysis of Comments and Changes: Pay and Price Standards

Introduction

The voluntary pay and price standards were announced on October 24, 1978, as an element of the President's anti-inflation program. As it had done at the end of the first program year, the Council began to consider various program changes towards the end of the second program year. The principal vehicle for soliciting public comment on the performance of the program to date and on future modifications was a report, released July 8, 1980, titled *The Pay/Price standards Program: Evaluation and Third-Year Issues* (45 FR 47052, July 1, 1980) (the *"Issues Paper"*). Public comments were due on August 1, 1980.

The Council received comments from more than 200 respondents. Commentators included business entities, trade associations, government agencies and officials, and individuals. While the comments reflected different points of view, there was general consensus on some basic items.

First, and most important, the Council requested comment on whether a third year of pay and price standards following the general outline of the first two years would be a useful component of an anti-inflation program. A clear majority of the comments expressed the view that the program should be terminated after the second program year. Some agreed with the Council's conclusion in the *Issues Paper* that the program has resulted in lower inflation rates than otherwise would have occurred, but argued that the prospects for continued effectiveness were questionable or that the administrative costs of the program would exceed the future benefits; others believed that the program had not been successful in restraining inflation. A large number of comments simply asserted that there should be no restriction on the operation of the free market.

The results of this straw vote are not surprising. Most of the respondents are opposed to any incomes policy; indeed, despite an explicit invitation to suggest alternative complements to fiscal and monetary restraint, those who advocated ending the standards program did not suggest anything to take its place. Nevertheless, we have been concerned that increasing opposition to a voluntary program undermines its effectiveness. Moreover, we have acknowledged that the effectiveness of incomes policies generally diminishes over time, and this program in particular was never intended to operate indefinitely. Thus, while the responses to the *Issues Paper* do not justify discontinuing the program, they do confirm our view that a thorough examination of the continued effectiveness of the program and possible alternatives is needed. The President has already announced that such an in-depth exploration should take place during the remainder of 1980.

In the interim, however, we have concluded that there is a manifest need for continued pay and price restraint and that, absent an alternative, the present program should be extended. Both the Price Advisory Committee and the Pay Advisory Committee have recommended extending the existing standards—without major revision—through the end of the calendar year. Such an approach is also supported by the public comments, which reflect a unanimity of opinion that, if the program continues, the number of changes should be kept to a minimum. The comments stressed that companies have gained useful experience with the program in the first two years and that major changes would entail additional compliance costs.

The Price Advisory Committee recommended that, if the standards are extended, the Council provide explanatory materials to clarify what constitutes compliance beginning October 1. So far as the pay standard is concerned, it is relatively simple to extrapolate the 7½ percent to 9½ percent range; the mechanics of extending the second-year price standard are somewhat more complicated. We believe the most efficient way of providing companies with guidance on the extrapolation of the price standard is to promulgate an annual limitation, to become effective on October 1, 1980, or the end of a company's second program year, whichever is sooner. This will also enable us to incorporate in the standards certain technical changes that we have been persuaded are necessary to preserve equity among those covered by the standards. The use of an annual standard should not, however, be construed as a sign that a decision has been made on the duration of this program. At this time, the only decision that has been made is to ask companies to comply with the revised standards through the end of this calendar year, while the intensive review of the program or alternatives to it is conducted. This is meaningful even in the context of annual standards because of the existence of intermediate (quarterly) limitations.

A discussion of the new price standards follows, structured along the

outline of issues that appeared in the *Issues Paper.* Where relevant, we summarize public comments on each issue and explain the Council's conclusions. We also identify and explain the reasons for the technical changes the Council adopted on its own. Thereafter, we reproduce "the Price Standard" (in 705A) "Modified Price Standards for Selected Industries" (in 705C) and "Definitions" (in 705D).

705A The Price Limitation and Profit Limitation

The first set of issues is whether to retain a price limitation, as opposed to adopting a cost-passthrough standard, and, if so, the level of that limitation. As noted above, the Council has decided essentially to extend the existing price standards, making only those changes that are clearly warranted at this time. Accordingly, the price limitation is being retained and the level will be the same as that for the second program year.

The decision to retain the price limitation is amply supported by those commenting on this issue. Specifically, two-thirds of the respondents stated that a price limitation is superior to a cost passthrough because the former provides strong incentives to improve productivity and to resist cost increases. The comments also noted the simplicity of the price limitation and the fact that both the Council and companies are familiar with its operation.

Some were concerned that a price limitation unduly restricts companies experiencing uncontrollable increases in costs. However, the Council will, as it has in the past, provide exception relief in the form of a profit limitation for such companies. In addition, the Council will continue to entertain requests for a cost passthrough for particularly large, uncontrollable increases in the cost of specific inputs. Finally, we have added a new section (705.b(4)) that makes explicit the fact that companies that experience uncontrollable cost increases may request a modification of their price limitation as an alternative to the profit limitation.

The Council decided not to change the level of the price limitation, notwithstanding the very persuasive statements in the public comments that the price limitation should be relaxed to retain the nexus with the pay standard and/or to reflect a more realistic productivity assumption. It is true that the second-year price standard was based on an 8-percent pay standard (and a lowering of the productivity assumption to 1¼ percent), whereas the mid-point of the pay range ultimately adopted by the Council was 8½ percent. However, as we observed in May in responding to the Price Advisory Committee's recommendation that the price standard be relaxed, the available data do not demonstrate a compelling need for a blanket relaxation, particularly since the Council has shown its commitment to adjusting price limitations upon specific showings of need. More important, we are impressed with the recent recommendation of the Price Advisory Committee that the pay and price standards should be related not only to one another but also to "other policy decisions affecting other arms of an anti-inflation program;" that such development and coordination will take time; and that "any future changes in the wage-price nexus should seek to lower compliance targets for wages as well as prices, not to raise them." Simply stated, the Council should not now relax the price standard and thereby contribute to the wage-price spiral, but rather should continue to urge restraint throughout the economy.

Consistently with the objective of extending the second-year price standard with minimum change, we have retained the base period (1976–77) that is used for translating the aggregate standard into a company-specific limitation. Commentators who discussed whether or not to change the base period overwhelmingly favored retaining the present one, noting that company compliance plans had been developed using this base and that any change would entail additional computational burdens. To the extent that, in particular instances, a company's base period may not adequately represent its normal cost/revenue relationships, the Council has made, and will continue to make, adjustments on a case-by-case basis. While some commentators expressed concern that in the past the Council has not gone far enough, none suggested any precise, workable formula by which a base period could be found unrepresentative.

Combining the decision to retain the base period and the decision to leave the 6¾ percent aggregate price standard unchanged, we can derive the company-specific price limitations. The aggregate base-period rate of price change was 6¼ percent; accordingly, the price limitation, cast as an annual limitation of a company's average rate of price change, is equal to the company's (compliance unit's) base-period rate of price change plus one-half percentage point. Because the aggregate price standard is unchanged, we also retain from the second year the 3½ percent lower bound and the 8½ percent upper bound of the range of allowable increases.

There remains the question posed in the *Issues Paper* of whether to cast the limitation as a one-year or as a cumulative standard and, if the latter, whether to move the base quarter forward. A large majority of comments received on this issue favored continuing past Council practice of having a cumulative standard, principally on the ground that no company should be penalized if it had not used all of its allowable price increases in the first two years. The advantage of a one-year standard, however, is that it reduces problems created by changes in product mix, including the introduction or discontinuation of products since the third quarter of 1978. A third option suggested by the Council—retaining a cumulative standard but moving the base quarter forward (essentially, a one-year limitation with carryover of unused allowable increases for the first two years)—combines the attractive properties of the cumulative and one-year limitations. A few commentators supported this idea, but several others observed the very real practical problems and cost involved in gathering the necessary data in time to make pricing decisions for the rest of this calendar year.

After considering the comments, the Council has decided to adopt a cumulative standard without moving the base quarter forward. The most important consideration is that companies should not be penalized for not using all of their allowable increases in the first two years. While the option of moving the base quarter forward is appealing, we have been convinced that the increased compliance costs would not offset the benefits.

To encourage companies that were on the profit limitation in the second year to return to the price limitation in the third, the Council has added a provision to the standards to the effect that a compliance unit that complied in the second year with a properly administered profit limitation measure its third-year price change from the fourth quarter of the second program year. Its third-year limitation would be its base-period rate of price change plus one-half of a percentage point (subject to the range), even though its actual three-year price change would be in excess of the three-year price limitation. While this may enable some companies to have greater price increases than if they had stayed on the price limitation from the outset of the program, the allowable prices increases for the third

year typically will not be as great as they would be if these companies continued on the profit limitation.

As with the price limitation, the Council had decided to make only essential changes in the profit limitation. Accordingly, we are retaining the base period (but will continue to make adjustments on a case-by-case basis where the base period is clearly unrepresentative of normal operations). Also, we are not changing the extent of catch-up and are not requiring downward volume adjustments. These decisions are consistent with the vast majority of comments received on these issues.

The Council is, however, making certain changes in the profit limitation, in large part because the extended duration of the program has increased the potential for certain inequities and inefficiencies. Specifically, the Council is explicitly providing for adjustments for certain productivity gains and increases in interest expenses, and for adjustments of price limitations as an alternative to profit limitations.

With respect to productivity, the Council has always been concerned about the possibility that the profit limitation may inhibit incentives to engage in productivity-enhancing capital investment; indeed, we adopted a price limitation instead of a cost-passthrough standard in part to avoid such inhibitions. Not surprisingly, critics of the program have asserted (but not documented) that the profit limitation has discouraged productivity-improving capital investment. In the *Issues Paper,* we raised the possibility of adjusting profit limitations for productivity improvements resulting from new capital investments. The response to this proposal was overwhelmingly favorable. To avoid creating a gaping loophole, we have included carefully drafted language in the standards to authorize adjustments for cost savings, at the time they are realized, attributable to documented productivity gains resulting from investment in new plant or equipment undertaken after October 1, 1980, or the end of a company's second program year, whichever is sooner. The Council believes that this adjustment will remove from the profit limitation any disincentives to invest in productivity/improving projects. The adjustment was not extended to past investment programs because such as adjustment would substantially relax the profit limitation without affecting investment decisions. Also, the adjustment will be made only when the gains are realized because this is when profits from such investments accrue to the company.

With respect to the treatment of interest expense, the Council believes that its original reason for including interest costs in the profit margin—namely, neutrality with respect to alternative forms of capitalization—remains valid, notwithstanding strongly worded statements to the contrary from most commentators who discussed this issue. Recently, the Price Advisory Committee recommended that the Council provide relief "where it can be demonstrated that interest costs substantially higher than those that prevailed in the base period impose an undue hardship." In response, the Council agreed to make explicit its willingness to adjust, on a case-by-case basis, companies' profit limitations where the inclusion of interest in the definition of profit results in an inordinate diminution of profits less interest. The Council has no preconceived notion of a threshold level for this adjustment; it is therefore incumbent on companies to provide a sound conceptual basis for making an adjustment and for the size of the adjustment.

Finally, as noted above, the Council believes that the price limitation is the preferred standard, so that it has always been willing to adjust a compliance unit's price limitation, as an alternative to granting exceptions that entail compliance with the two-part profit limitations. The new standards make this commitment explicit. The type of data that companies should prepare to document eligibility for this adjustment is outlined in Part 707.

Two other items deserve mention. With respect to excluded products, several commentators proposed exclusion of additional products (e.g., chicken broilers, lead, zinc, cobalt, titanium, cement, aluminum ingot, steel, and propane) or industries (e.g., government-regulated industries, railroads, and petroleum). In the interest of minimizing changes in the price standard, the Council has made only one change in this section: the removal of health maintenance organizations from the list of exclusions. The Council has concluded that an exclusion is not appropriate, because many of these organizations do not have the properties (principally built-in resistance to cost increases) that induced the Council to exclude them last year. The remaining changes in this section are language changes designed to clarify the Council's intent that quantities, as well as revenues, associated with the sale of excluded goods and services should be excluded from all price calculations, and to define more fully the types of transactions to which the non-arms-length-transaction provision and the pre-existing-contracts provision apply.

Lastly, the insufficient-product-coverage section has been changed to reduce compliance costs for companies. Specifically, the Council has eliminated the requirement that products not excluded under this section comply with the price limitation at the same time that the compliance unit as a whole complies with the profit limitation. While the reasons for imposing the requirement of compliance with the price limitation on nonexcluded products remain valid, the Council is convinced that the benefits are more than offset by the heavier administrative burden imposed on compliance units subject to this second part of the insufficient-product-coverage section. In addition, there are language changes to clarify the Council's interpretation of this section. In particular, the language referring to pre-existing contracts (Section 705.4(b)) in paragraph (1) of this section has been deleted, because that exclusion applies only to program-year revenues and is irrelevant to the base-year revenues referred to in that part of the insufficient-product-coverage section. Similarly, editorial changes have been made in paragraph (2) to make it clear that the exclusions under Section 705.4(a) (7) through (9) apply to a compliance unit's revenues for the third program year.

705C The Modified Price Standards

As in the past, the Council is providing modified price standards as alternatives for industries for which the price limitation is or may be unsuitable. We discuss below the changes in the modified price standards for retailers and wholesalers, food manufacturers and processors, petroleum refiners, electric, gas, and water utilities, and professional firms. No changes are being made now in the standards for insurance companies and financial institutions since these standards currently run through the end of the calendar year.

The introductory sections to the modified price standards have been changed to reflect past Council practices and to conform with the revisions of the profit limitation discussed above. Thus, the standards now make explicit the Council policy that, except as otherwise provided, a compliance unit must derive 50 percent or more of its base-year revenue from the industry covered by the modified standard to be eligible for that standard, and that the treatment of acquisitions and divestitures is the same

for compliance units electing the modified standards as for those on the price or profit limitations. In addition, the standards now include language authorizing Council adjustments of the applicable limitations for certain productivity gains (that is, cost savings, at the time they are realized, attributable to documented productivity gains resulting from investment in new plant or equipment undertaken after October 1, 1980, or the end of a company's second program year, whichever is sooner). Similarly, the standards now explicitly authorize adjustments to the modified standards for specific uncontrollable cost increases as alternatives to the use of the profit limitation. (Because interest is only one of many items in the gross margin, there is no need to provide for a specific adjustment to compensate for increases in interest alone, such as is being provided for in the profit limitation.)

a. *Retail and Wholesale Percentage-Gross-Margin Standard.*

The *Issues Paper* included two questions for discussion. The first was whether we should continue to allow companies with positive margin trends to project those trends and whether there should be a minimum positive margin trend for companies with unchanging or decreasing margins in the base period. Comments on this issue (primarily from the industry) strongly supported retaining the positive margin trend and/or providing a minimum positive trend for those that now are assigned a zero trend factor. This subject is one that has engaged the attention of the Price Advisory Committee. Its most recent recommendation is that there be no change at this time in the margin-trend provision. We accept that recommendation, which is consistent with our overall objective of keeping the number of changes in the standards to a minimum at this time.

The second question in the *Issues Paper* was whether we should specify all of the items to be excluded in calculating the gross margin. We had stated that, while consistency is desirable, we were troubled by the numberous accounting variations among companies and industries. Comments on this question were mixed; most significant, however, is that no one responded to our plea for suggestions of a conceptual framework that can readily be translated into a list of items for inclusion or exclusion. Given this response, the Council believes that this aspect of the standard should not be altered.

In addition, the base year is being moved forward to reduce the distortions caused by shifts in product mixes over the last two years. The advantages of such a change are described above in our discussion of the price limitation. The disadvantages that we noted there, which were controlling in our decision not to move the base quarter forward for the price limitation, are not nearly so substantial here since the reference period is an annual one. Also, we have included a "carryover factor" so that the annual limitation will have the effect of a cumulative standard. Finally, the intermediate limitations in this standard have been changed so that companies may immediately take the full trend growth in their margins rather than phase it in during the year; at the same time, they may not, without specific justification, exceed their margin trend in any quarter of the year.

b. *Food Processors' and Manufacturers' Gross-Margin Standard.*

The major question raised in the *Issues Paper* about this standard was whether items other than the food used in processing operations should be excluded from calculations of the gross margin. Almost all of the industry commentators favored additional exclusions for such costs as packaging, interest, and energy; on the other hand, the U.S. Department of Agriculture objected to the passthrough of non-food cost items that would result from such exclusions. The Council has repeatedly explained our reasons for having a limited, rather than full, passthrough of costs. None of the comments respond to those concerns, and we have not yet been supplied with a basis for expanding the list of cost items that can be passed through under the standards.

Many of the comments included complaints that the gross-margin standard is unfairly low; while the price limitation was relaxed one percentage point at the beginning of the second program year, no corresponding change was made in the gross-margin limitation. At the time, we were not persuaded that such a blanket relaxation of the gross-margin limitation was necessary. Without revisiting that decision, we have now concluded, partially because of the cost increases that have occurred in the interim, that perpetuating the difference between the price and the gross-margin limitations would not be justified, and have accordingly adjusted the annual allowable increase in the gross margin from 6.5 percent to 7.5 percent (that is, the one percentage point by which the price limitation was raised last year).

Finally, for reasons already discussed above in connection with the retail/wholesale standard, we have decided to move the base year forward; consequently, we have added a carryover factor so that the annual limitation has the effect of a cumulative standard. In addition, we have eliminated intermediate limitations that are more stringent than the annual limitation, while retaining quarterly compliance tests; in brief, companies need not phase in the increase in their margins, but they are held to the annual increase in each quarter of the program year.

c. *Petroleum Refiners' Gross-Margin Standard.*

The *Issues Paper* raised two types of questions for public comment: (1) whether the refiner's gross-margin standard provides adequate incentives for investment and energy-conservation and (2) whether it should be a quarterly or an annual standard. With respect to the first issue, the Council proposed to correct any deficiencies in the present standard by adopting an alternative mix-adjustment procedure using base-period quantities, and we further suggested updating the base-period. Most of the comments on these proposals favored such changes, although some argued that companies should be allowed to choose between the current and the proposed method. The Council has concluded that the proposed alternative mix-adjustment procedure is desirable and should be adopted. Companies will not, however, be given the option of using this procedure or the second-year procedure, because allowing companies such a choice would create substantial slippage in the standard.

A separate but related issue is whether the standard should continue to be cast as a gross-margin-per-barrel limitation, with inherent upward and downward adjustments of gross margins when volume increases or decreases. Most commentators opposed the symmetric treatment of volume adjustments, but the Council has concluded that the main reason advanced for this opposition—that, because of fixed costs, unit costs typically rise when volume declines—is not compelling. The counterpart to this argument—that unit costs fall when volumes rise—could be used against adjustments for volume increases as well; hence, the only reasonable alternatives to a symmetric volume adjustment are (1) no adjustment at all or (2) adjustments that attempt to account for changing unit costs as volume fluctuates. The Council finds the first of these options to be singularly unattractive; some adjustment must be

made for volume increases, and declining volumes are not a legitimate justification for increasing unit prices. The second is also unacceptable because it would be immensely complicated and essentially would require knowledge of company-specific technologies.

The second issue raised by the Council was whether the limitation should be written as a quarterly or an annual test, and, if the latter, whether the base period should be a base year or remain as a base quarter. The proposal for an annual standard received nearly unanimous support from commentators. The remarks on the issue of changing to a base year were mixed. After careful deliberation, we have decided to adopt an annual period for both the base and the program period.

We have also decided that the base period should be a new base year, comparable to the one developed for the other margin standards. We have, therefore, defined a gorss-margin-per-barrel carryover factor to convert the annual limitation into a cumulative standard. Also, like the other margin standards, the level of the limitation here is being adjusted upward by one percentage point.

Finally, the Council has added a provision permitting a petroleum-refining compliance unit subject to the profit limitation in the third year to adjust that limitation for changes since the base year in its hydrocarbon input and output mixes. While the Council has declined to authorize such an adjustment for others on the profit limitation, we have concluded that an exception for refiners will promote this nation's energy policies.

d. *Electric, Gas, and Water Utilities' Gross-Margin Standard.*

We discussed in the *Issues Paper* the divergent views about whether utilities should be covered by the standards. The great majority of those commenting on this question favored exempting utilities from our standards, on the grounds that our efforts are needlessly duplicative of the role of state and Federal public utility commissions. After careful consideration, we have concluded that the objectives of the President's anti-inflation program are best served by continuing the standards' coverage of this important part of the economy, while delegating primary responsibility for administering the standards to the state and Federal public utility commissions. To minimize areas of conflict or inconsistency, we have made the standard more compatible with regulatory practices; specifically, the standard has been changed to allow utilities the option of using either the Council's base and program years or the most comparable base and test years used by the state or Federal public utility commissions. (Because utilities typically do not experience the type of changes in product mix that prompted us to create a new base year for the other modified standards, we have not moved the base year forward in this case.)

e. *Professional-Fee Standard.*

The Council did not raise any qustion about this standard in the *Issues Paper*, and we received no comments on it. Nonetheless, editorial changes are necessary to extend it beyond the end of the second program year and we are moving the base year forward (consistently with other modified standards). In addition, the Council has decided to exclude from the coverage of this standard (but *not* of the price standards) architects and engineers, whose services often resemble custom products and whose charges typically combine percentage mark-ups and flat fees.

Miscellaneous Matters

Language changes have been made to 705D ("Definitions") to conform with the changes to the standards discussed above. In addition, there are three procedural matters raised in the *Issues Paper* that are pertinent to the extension of the Standards. To the extent appropriate, the Council decisions on these matters will be incorporated in the revised procedural rules (Part 706) and revised data requests (Part 707) to be released shortly.

a. *Company Organization.*

The Council has asked whether companies should be allowed to reorganize themselves for compliance purposes at the end of the second program year, and, in any event, whether there should now be some degree of required disaggregation for compliance purposes in the third year. The response to the first proposal was overwhelmingly positive; the response to the second was overwhelmingly negative. Consequently, as in the past, the Council has decided to allow companies to reorganized for compliance purposes between program years but not during the year. while we will not impose any disaggregation requirement, except as already specified in the modified standards, we will reserve the right to require changes in company organization for compliance purposes as a condition for an exception.

b. *Self-Administration of Exceptions.*

In the *Issues Paper* we proposed permitting some or all compliance units to self-administer uncontrollable-cost exceptions. Most commentators wholeheartedly supported this proposal, although some said that only companies that had previously been granted an uncontrollable-cost exception should be permitted to self-administer such an exception in the third year.

The Council has, from the outset of this program, been intent upon minimizing its administrative costs to companies. Having heard no objection to greater self-administration, we have decided to allow companies with revenues over $100 million but less than $250 million to self-administer uncontrollable-cost, as well as inability-to-compute, exceptions. Companies with $250 million or more in revenues may self-administer these types of exceptions only if the Council had approved such an exception for the same compliance unit during the second program year.

Any company in the above categories that chooses to self-administer one of these exceptions should promptly notify the Council that it has done so; no notification is required before the filing of the report of company organization (Form CO–1). Companies with revenues of $250 million or more should also submit with the Form CO–1 (or any subsequent notification of self-administration) documentation demonstrating their eligibility for the exceptions (see Tables 14 and 16 of the "Implementation Guide" for the second program year).

c. *Price Prenotification.*

Several approaches to price prenotification were described in the *Issues Paper*. The comments were universally opposed to any variation of such a program. As noted at the outset of this paper, there will be an in-depth evaluation of the continued effectiveness of the pay and price standards and possible modifications of or alternatives to them. The subject of price prenotification is one that should properly be considered as part of that overall review.

(Council on Wage and Price Stability Act, Pub. L. 93–387 (August 24, 1974), as amended by Pub. L. 94–78 (August 9, 1975) and Pub. L. 95–121 (October 5, 1977), 12 U.S.C. 1904 note; as last amended by Pub. L. 96–10 (May 10, 1979); E.O. 12092 (November 1, 1978); E.O. 12161 (September 28, 1979))

Issued in Washington, D.C., September 19, 1980.

R. Robert Russell,

Director, Council on Wage and Price Stability.

Accordingly, Part 705 of Title 6 CFR is amended as set forth below:

PART 705—ANTI-INFLATIONARY PAY AND PRICE STANDARDS

Subpart A—The Price Standard

705.1 Compliance with the price standard.
705.2 The price limitation.
705.3 Intermediate price limitations.
705.4 Exclusions.
705.5 Special situations.
705.6 Exceptions.

Subpart B—[Reserved]

Subpart C—Modified Price Standards for Selected Industries

705.40 General applicability of modified price standards.
705.41 Exceptions.
705.42 Percentage-gross-margin standard for wholesale and retail trade.
705.43 Gross-margin standard for food manufacturing and processing.
705.44 Gross-margin standard for petroleum-refinery operations.
705.45 Gross-margin standard for electric, gas, and water utilities.
705.46 Professional-fee standard.
705.47 Federal, state, and local government enterprises, private nonprofit enterprises, and government-subsidized private companies.
705.48 Price standard for medical and dental insurance. [Reserved]
705.49 Price standard for providers of insurance other than medical and dental insurance. [Reserved]
705.50 Standard for financial institutions. [Reserved]
705.51 Price standard for passthrough of gold and silver increases.

Subpart D—Definitions

705.60 Base period.
705.61 Base-period rate of price change.
705.62 Base quarter.
705.63 Base year.
705.64 Company.
705.65 Compliance unit.
705.66 Custom product.
705.67 Employee.
705.68 First program year.
705.69 Future-value incentive plans.
705.70 Modified three-year price change for gold and silver passthrough.
705.71 New base year.
705.72 New product.
705.73 Organized exchange market.
705.74 Pay.
705.75 Pay rate.
705.76 Product.
705.77 Product price.
705.78 Profit margin.
705.79 Second program year.
705.80 Third year.
705.81 Three-year price change.

Authority: Council on Wage and Price Stability Act, Pub. L. 93–387 (August 24, 1974), as amended by Pub. L. 94–78 (August 9, 1975 and Pub. L. 95–121 (October 5, 1977), 12 U.S.C. 1904 note; as last amended by Pub. L. 96–10 (May 10, 1979); E.O. 12092 (November 1, 1978); E.O. 12161 (September 28, 1979).

Subpart A—The Price Standards

§ 705.1 Compliance with the price standards.

Beginning October 1, 1980, or the end of a compliance unit's second program year, whichever is sooner, a compliance unit complies with the price standards if and only if it satisfies the price limitations in §§705.2 and 705.3, subject to the applicable provisions of §§ 705.4, 705.5, and 705.6.

§ 705.2 The price limitation.

A compliance unit complies with the price limitation if its three-year price change is not greater than (1) its base-period rate of price change compounded for three years plus 0.5 percentage points or (2) 29 percent, whichever is less. However, a compliance unit will be in compliance with the price limitation regardless of its base-period rate of price change if its three-year price change is 8.7 percent or less.

(a) The base-period rate of price change is the sales-weighted average of the percentage changes of a compliance unit's product prices from the last calendar or complete fiscal quarter of 1975 to the corresponding quarter of 1977, expressed at an annual rate.

(b) If a compliance unit cannot compute its base-period rate of price change, it is assigned a three-year price limitation of 15.5 percent.

(c) If a compliance unit was granted or properly self-administered an exception to comply with the two-part profit limitation in 705.6(a) during the second program year, it complies with the price limitation if its price change from the fourth quarter of the second program year to the fourth quarter of the third year is not greater than (1) its base-period rate of price change plus 0.5 percentage points, or (2) 8.5 percent, whichever is less. However, it will be in compliance with the price limitation regardless of its base-period rate of price change if its price change from the fourth quarter of the second-program year to the fourth quarter of the third year is 3.5 percent or less.

(d) The three-year price change is the sales-weighted average of the percentage changes of a compliance unit's product prices from the last calendar or fiscal quarter completed before October 2, 1978, to the corresponding quarter or 1981.

§ 705.3 Intermediate price limitations.

(a) A compliance unit complies with the 9th-quarter, the 10th-quarter, and the 11th-quarter price limitations if the 9th-quarter, the 10th-quarter, and the 11th-quarter price changes do not exceed five-sixths, five-sixths, and eleven-twelfths, respectively, of the price limitation in § 705.2. The 9th-quarter price change is the sales-weighted average of the percentage changes of a compliance unit's product prices from the base quarter to the first quarter of the third year. The 10th-quarter price change is the sales-weighted average of the percentage changes of a compliance unit's product prices from the base quarter to the second quarter of the third year. The 11th-quarter price change is the sales-weighted average of the percentage changes of a compliance unit's product prices from the base quarter to the third quarter of the third year.

(b) If a compliance unit was granted or properly self-administered an exception to comply with the two-part profit limitation in § 705.6(a) during the second year, it complies with the 9th-quarter, 10th-quarter, and 11th-quarter price limitations if its price changes from the fourth quarter of the second program year to the first quarter, the second quarter, and the third quarter of the third year, respectively, do not exceed one-half, one-half, and three-quarters, respectively, of the price limitation in § 705.2(c).

(c) A compliance unit may exceed the intermediate price limitations if it can demonstrate that its price increases:

(1) Are justified on grounds of seasonal variations in business operations, historical business practices, or unusual business conditions; and

(2) Will not prevent compliance with the price limitation in § 705.2 by the end of the third year.

§ 705.4 Exclusions.

(a) Producers of goods and services in the following categories should exclude revenues and quantities associated with the sale of those goods and services from the calculation of all price changes.

(1) Agricultural, fishing, forestry, and mineral products included in the 1972 Standard Industrial Classification Major Groups 01, 02, 08 (except 085), 09, 10 (except 108), 11 (except 1112), 12 (except 1213), 13 (except 138), and 14 (except 148).

(2) Recyclable scrap materials, including, but not limited to, ferrous and nonferrous metal scrap, wastepaper, textile waste, scrap rubber, scrap plastics, and glass cullet.

(3) Commodities whose historical and current price changes are closely tied to price movements in an organized exchange market for that commodity, either domestic or foreign, including, but not necessarily limited to, gold, silver, oilseeds, and oil and protein meals.

(4) Interest received.

(5) Exports.

(6) Hospital services subject to price monitoring by the Department of Health and Human Services.

(7) Products sold or transferred to unconsolidated subsidiaries, foreign subsidiaries, or joint ventures at other than arms-length.

(8) New or discontinued products, except that those products sold by the compliance unit throughout (i) the base period or (ii) the base quarter and the three program years should be included in the respective calculations of the price changes for those periods. (A compliance unit subject to the price limitation in § 705.2(c) should include in its calculations of third-year price changes the revenues and quantities associated with the sale of any new product sold throughout the fourth quarter of the second program year and the third year.)

(9) Custom products, except that those custom products sold by the compliance unit throughout (i) the base period of (ii) the base quarter and the three program years should be included in the respective calculations of price changes for those periods. (A compliance unit subject to the price limitation in § 705.2(c) should include in its calculations of third-year price changes the revenues and quantities associated with the sale of any custom product sold throughout the fourth quarter of the second program year and the third year.)

(b) Deliveries during the three program years at prices determined by contracts in effect before October 2, 1978, should be excluded from the calculations of the three-year price change and intermediate price changes. This exclusion applies only if the contract clearly specifies the final transaction prices or contains nondiscretionary formulas for determining the final transaction prices (i.e., only if there is no seller discretion to adjust or renegotiate those prices or formulas).

§ 705.5 Special situations.

(a) Insufficient Product Coverage

(1) A compliance unit that was exempt from coverage of the price standards during the second program year because its base-year adjusted net revenues were less than 25 percent of its base-year net revenues and its base-year revenues from products not excluded under § 705.4(a)(1) through (6) were no more than $25 million is also exempt from coverage of the third-year price standards.

(2) If products excluded from calculation of three-year price changes under Section 705.4(a) (7) through (9) account for one-third or more of a compliance unit's total revenue for the three program years minus revenue from the sale of products excluded under § 705.4(a) (1) through (6) and 705.4(b), the compliance unit should comply with the profit limitation in § 705.6(a).

(b) Acquisitions

A company acquired after September 30, 1975, may be combined with the acquiring company or any compliance unit of the acquiring company, or may be treated as a separate compliance unit.

(c) Divestitures

A company should exclude the data for any divested entity from all calculations.

§ 705.6 Exceptions.

A compliance unit may be eligible for an exception from the price limitation in § 705.2. This section sets forth the grounds for such an exception and the applicable limitations. Subpart 706C specifies the procedures to be followed by compliance units that are to request Council approval of an exception. Subpart 707D describes the data that a compliance unit should prepare to document its eligibility for an exception.

(a) Inability To Compute and Uncontrollable Cost Increases

(1) If a compliance unit cannot calculate its three-year price change or if, as a result of uncontrollable cost increases, compliance with the price limitation in § 705.2 would cause a significant deterioration of the compliance unit's profit position, it should satisfy the following two-part profit limitation:

(i) The profit margin in the third year should not exceed the sales-weighted average profit margin for the best two of the compliance unit's last three fiscal years completed before October 2, 1978. In addition, the profit margin during each quarter of the third year should not exceed the same sales-weighted average unless it can be demonstrated that any excess is consistent with an explicit plan, based on reasonable projections of economic conditions, to achieve compliance for the third year as a whole.

(ii) Third-year profit should not exceed base-year profit by more than 20.9 percent plus any positive percentage growth in physical volume from the base year to the third year. Base-year profit can be either (a) actual base-year profit or (b) base-year revenue times the average of the base-year profit margin and the average profit margin determined in paragraph (a)(1)(i) of this section.

(2) *Productivity Adjustments.* The Council will adjust a compliance unit's profit limitation to reflect the amount of cost savings, at the time they are realized, attributable to documented productivity gains resulting from investment in new plant or equipment undertaken after October 1, 1980, or the end of the compliance unit's second program year, whichever is sooner.

(3) *Interest Adjustments.* The Council will adjust a compliance unit's profit limitation if the requirement in § 705.78 that interest be included with profit in the calculation of profit margin results in an inordinate diminution of profit less interest.

(4) *Price-Limitation Adjustments.* A compliance unit that is eligible for a profit limitation on grounds of uncontrollable cost increases may apply to the Council for an adjustment of its price limitation under 705.2.

(b) Undue Hardship and Gross Inequity

The Council may except a compliance unit from, or make appropriate adjustments to, the price limitations or the profit limitation if their application would cause undue hardship or gross inequity.

(1) An undue hardship exists if application of the price standards would seriously threaten the company's financial viability.

(2) A gross inequity is any situation that, in the Council's judgment, is manifestly unfair.

Subpart B [Reserved]

Subpart C—Modified Price Standards for Selected Industries

§ 705.40 General applicability of modified price standards.

This subpart provides modified price standards for industries for which the price standard in 705A may be inappropriate. Except as otherwise provided below, a compliance unit is eligible for a modified price standard if it derives 50 percent or more of its new-base-year revenues from the industry covered by the modified standard. The treatment of acquisitions and divestitures in § 705.5 (b) and (c) also applies to companies covered by the modified standards.

§ 705.41 Exceptions.

A compliance unit may be eligible for an exception from a modified price standard. This section sets forth the grounds for such an exception and the applicable limitations. Subpart 706C

specifies the procedures to be followed by compliance units that are to request Council approval of an exception. Subpart 707D describes the data that a compliance unit should prepare to document its eligibility for an exception.

(a) Except as noted in the following sections, a compliance unit eligible to apply a modified price standard may alternatively comply with the two-part profit limitation in § 705.6(a) if and only if it can demonstrate that (1) it cannot make the calculations required for the modified standard, or (2) as a result of uncontrollable cost increases, compliance with the modified standard would cause a significant deterioration of the compliance unit's profit position.

(b) The Council will adjust a compliance unit's percentage-gross-margin limitation or gross-margin limitation to reflect the amount of cost savings, at the time they are realized, attributable to documented productivity gains resulting from investment in new plant or equipment undertaken after October 1, 1980, or the end of the compliance unit's second program year, whichever is sooner.

(c) A compliance unit that is eligible for a profit limitation on grounds of uncontrollable cost increases under § 705.41(a) may alternatively apply to the Council for an adjustment of its percentage-gross-margin limitation, gross-margin limitation, or professional-fee standard.

(d) The Council may accept a compliance unit from, or make appropriate adjustments to, the relevant modified price standard if application of the relevant modified price standard would cause undue hardship or gross inequity within the meaning of 705.6(b).

§ 705.42 Percentage-gross-margin standard for wholesale and retail trade.

(a) *Eligibility.* (1) A compliance unit in the wholesale and retail trade industries (1972 Standard Industrial Classification Major Groups 50 through 59, including food-service operations but excluding manufacturer's sales branches and offices) is eligible for a percentage-gross-margin standard as an alternative to the price standard in 705A.

(2) Notwithstanding the definition of "compliance unit" in Subpart 705D, manufacturing and processing operations of a compliance unit applying the percentage-gross-margin limitation must be treated as separate compliance units under Subpart 705A or the appropriate modified standard in Subpart 705C if the new-base-year wholesale sales from the company's manufacturing and processing operations to other companies exceeded $50 million. The transfer-price policy of vertically integrated companies must be consistent over time.

(b) *Definition.*

(1) The *gross margin* is net sales (gross sales adjusted for discounts, returns, coupons, and other allowances) less the cost of goods sold. For manufacturing or processing operations that are allowed under § 705.42(a)(2) to be aggregated with wholesale and retail operations, the gross margin is net sales less the cost of material inputs used in the manufacturing or processing operations.

(2) The *percentage gross margin* is the gross margin divided by net sales.

(3) The *margin trend* is the compound annual rate of growth of the percentage gross margin between the base year and the corresponding year prior to October 2, 1976. If this change is negative, then the margin trend is zero.

(4) In computing its percentage gross margin, a compliance unit may adjust for changes in the composition of sales at any reasonable level of aggregation, such as division or product, but such adjustments must be made consistently.

(5) A compliance unit's *percentage-gross-margin carryover factor* is its second-year annual percentage-gross-margin limitation minus its actual percentage gross margin in the second program year. If that difference is negative but the compliance unit was in compliance with the second-year price standards, its percentage-gross-margin carryover factor is zero.

(c) *Percentage-Gross-Margin Limitation.* A compliance unit complies with the percentage-gross-margin limitation if its percentage gross margin in the third year does not exceed its new-base-year percentage gross margin plus its percentage-gross-margin carryover factor by more than its margin trend.

(d) *Intermediate Percentage-Gross-Margin Limitations.* A compliance unit complies with the intermediate percentage-gross-margin limitations if its cumulative percentage-gross-margins during the first 3, 6, and 9 months of the third year do not exceed its new-base-year percentage gross margin plus its percentage-gross-margin carryover factor by more than its margin trend.

(e) A compliance unit may exceed the intermediate limitations in paragraph (d) of this Section if it can demonstrate that its percentage-gross-margin increases

(1) Are justified on grounds of seasonal variations in business operations, historical business practices, or unusual business conditions, and

(2) Will not prevent compliance with the annual limitation in paragraph (c) of this Section.

(f) *Inability to Compute.* If a compliance unit is unable to compute its new-base-year percentage gross margin or its gross-margin trend, the Council may assign it a percentage-gross-margin limitation or provide alternative computation procedures.

§ 705.43 Gross-margin standard for food manufacturing and processing.

(a) *Eligibility.*

A compliance unit in the food manufacturing and processing industries (1972 Standard Industrial Classification Major Group 20, including nonalcoholic but excluding alcoholic beverage industries) is eligible for a gross-margin standard as an alternative to the price standard in 705A.

(b) *Definitions.*

(1) The *gross margin* is net sales (gross sales adjusted for discounts, returns, coupons, and other allowances) less the cost of food products used in food manufacturing and processing, relating to those sales.

(2) In computing its gross margin, a compliance unit may adjust for changes in the composition of sales at any reasonable level of aggregation, such as division or product, but such adjustments must be made consistently.

(3) A compliance unit's *gross-margin carryover factor* is the sum of its quarterly allowable gross margins for the second program year minus the sum of its quarterly actual gross margins for the second program year. If that difference is negative but the compliance unit was in compliance with the second-year price standards, its gross-margin carryover factor is zero.

(c) *Gross-Margin Limitation.* A compliance unit complies with the gross-margin limitation if its gross margin in the third year does not exceed its new-base-year gross margin plus its gross-margin carryover factor by more than 7.5 percent, plus any positive percentage growth in physical volume over new-base-year volume.

(d) *Intermediate Gross-Margin Limitation.* A compliance unit complies with the intermediate gross-margin limitations if its cumulative gross margins during the first 3, 6, and 9 months of the third year do not exceed the sum of its cumulative gross margins for the same period in the new base year, respectively, plus its carryover factor by more than 7.5 percent, plus any positive percentage growth in physical volume between the comparable 3, 6, and 9 months of the new base year and the third program year.

(e) A compliance unit may exceed the intermediate gross-margin limitation in paragraph (d) of this Section if it can

demonstrate that increases in excess of these limitations

(1) Are justified on the grounds of seasonal variations in business operations, historical business practices, or unusual business conditions, and

(2) Will not prevent compliance with the gross-margin limitation in paragraph (c) of this Seciton.

(f) *Physical Volume Increases.* Physical volume increases to be used in justifying increases in gross margins may be computed by deflating revenues using a measure of price increases as the deflator, or by computing changes in units or tonnage sold when such units are revenue-weighted by major product categories.

(g) *Inability to Compute.* If a compliance unit is unable to compute its new-base-year gross margin, the Council may assign a gross-margin limitation or provide alternative computation procedures.

§ 705.44 Gross-margin standard for petroleum-refinery operations.

(a) Notwithstanding the definition of "compliance unit" in Subpart 705D, a company that is or includes a petroleum refiner must disaggregate into the following three groups:

(1) Petroleum-refinery operations (including the distribution and marketing of petroleum products, the refining of crude oil under processing agreements, and the manufacture and distribution of petrochemicals produced in those refinery operaitons);

(2) Crude-oil, natural-gas, and natural-gas liquids production, and other exempt production (such as the mining of coal) to the point of first sale and transfer; and

(3) All other operations.

Further disaggregation of each of these groups in accordance with the definition of "compliance unit" in Subpart D is permissible.

(b) *Eligibility.*

As an alternative to the price standard in 705A, petroleum companies may elect the gross-margin standard for their refining operations.

(c) *Definitions.*

(1) A petroleum refiner is a "refiner" as defined in § 212.31 of the Department of Energy regulations, 10 CFR 212.31 (in brief, a firm that refines, blends, or substantially changes crude oil and certain petroleum products, and sells the output to resellers, retailers, or ultimate consumers).

(2) The *gross margin* is net sales (gross sales adjusted for discounts, rebates, and other allowances) less the cost of hydrocarbon inputs associated with those sales. The term "hydrocarbon inputs" includes crude oil, feedstocks, blendstocks, finished petroleum products purchased for resale, natural gas, natural-gas liquids, and natural-gas-liquid products (including natural gas and other hydrocarbon fuel used in refinery operations).

(3) A compliance unit's *gross-margin-per-barrel carryover factor* is the sum of its quarterly allowable gross margins for the second program year minus the sum of its quarterly actual gross margins for the second program year, divided by the total number of barrels sold in the second program year. If the result is negative but the compliance unit was in compliance with the second-year price standards, its gross-margin-per-barrel carryover factor is zero.

The allowable or actual gross margin in each quarter equals that quarter's sales in barrels multiplied, respectively, by that quarter's allowable or actual gross margin per barrel. The allowable and actual gross margins per barrel are to be calculated as specified by the second-program-year gross-margin standard for petroleum refiners. For these calculations, hydrocarbons used as fuel are to be deducted from revenues in calculating allowable and actual gross margins per barrel in each quarter of the second program year.

(d) *Gross-Margin Limitation.* A refiner complies with the gross-margin limitation if its gross margin per barrel in the third year does not exceed its new-base-year gross margin per barrel plus its gross-margin-per-barrel carryover factor by more than 7.5 percent. The gross margin per barrel must be adjusted to remove the effects of changes in the mix of inputs and outputs, using new-base-year quantities as weights:

(1) The gross margin per barrel in the third year is calculated on the basis of the new-base-year mix of inputs and outputs. In other words,

$$gm_3 = \frac{\sum_j q_{j2}\, p_{j3} - \sum_i v_{i2}\, c_{i3}}{\sum_j q_{j2}}$$

in which

gm_3 = gross margin per barrel in the third year;

q_{j2} = quantity (in barrels) of sales of the *jth* product in the second program year;

p_{j3} = average selling price (per barrel) realized from sales of the *jth* product in the third year;

v_{i2} = quantity (in barrels) of the *ith* hydrocarbon input associated with sales in the second program year; and

c_{i3} = average unit cost (per barrel) of the *ith* hydrocarbon input associated with sales in the third year.

(2) The new-base-year gross margin per barrel equals the new-base-year gross margin divided by total sales in barrels during the new base year. In other words,

$$gm_2 = \frac{\sum_j q_{j2}\, p_{j2} - \sum_i v_{i2}\, c_{i2}}{\sum_j q_{j2}}$$

in which

gm_2 = new-base-year gross margin per barrel;

q_{j2} = quantity (in barrels) of sales of the *jth* product in the second program year;

p_{j2} = average selling price (per barrel) realized from sales of the *jth* product in the second program year;

v_{i2} = quantity (in barrels) of the *ith* hydrocarbon input associated with sales in the second program year; and

c_{i2} = average unit cost (per barrel) of the *ith* hydrocarbon input associated with sales in the second program year.

(e) *Intermediate Gross-Margin Limitations.* A refiner complies with the intermediate gross-margin limitations if its gross margins per barrel in the first 3, 6, and 9 months, respectively, of the third year do not exceed its new-base-year gross margin per barrel plus its gross-margin-per-barrel carryover factor by more than 7.5 percent.

(f) A refiner may exceed the intermediate gross-margin limitation in paragraph (e) of this section if it can demonstrate that increases in excess of these limitations

(1) are justified on grounds of seasonal variations in business operations, historical business practices, or unusual business conditions, and

(2) will not prevent compliance with the gross-margin limitation, in paragraph (d) of this section.

(g) *Application of the Profit Limitation.*

(1) If any of the compliance units of a company that is or includes a petroleum refiner is properly subject to the two-part profit limitation in § 705.6(a), it should follow generally accepted accounting principles and procedures in allocating costs and expenses to different compliance units if they have historically made these allocations. Costs that have not historically been

allocated may be allocated to the compliance unit, other than the crude-oil and natural-gas production unit(s), that has the largest dollar sales volume, or in any other reasonable manner, as long as such allocations are done consistently in the new base year and the third year.

(2) A petroleum refiner subject to the profit limitation § 705.6(2) may adjust profits for changes in its mixes of hydrocarbon inputs and of outputs, using the techniques described in paragraph (d) of this section. The techniques described in paragraph (d) of this section.

§ 705.45 Gross-margin standard for electric, gas, and water utilities.

(a) *Eligibility.* Utilities that sell electric power at retail or wholesale, that sell natural gas at retail or wholesale but not at the wellhead, and that provide drinking water at retail or wholesale are eligible for a gross-margin standard as an alternative to the price standard in 705A.

(b) Definitions.

(1) For electric and gas utilities, the *gross margin* is sales less the cost of purchased fuels, gas, and power.

(2) For water utilities, the *gross margin* is sales less the cost of purchased water and power.

(3) A compliance unit's *base year* is either the base year as defined in § 705.63, or the applicable state or Federal utility commission's base year that most closely corresponds in time with the Council's base year.

(4) A compliance unit's *third year* is either the third year defined in § 705.80 or the applicable state or Federal utility commission's test year that most closely corresponds in time with the Council's third year.

(c) *Gross-Margin Standard.* A compliance unit complies with the gross-margin standard if its gross margin in the third year does not exceed its gross margin in the base year by more than 22.0 percent plus any positive percentage growth in physical volume over the same period.

§ 705.46 Professional-fee standard.

(a) *Coverage.*

(1) This standard applies to fees and charges for the services of physicians, dentists, lawyers, accountants, outside directors, and other professionals; these include all activities included in 1972 Standard Industrial Classification Major Groups 80 (except 805, 806, 808, and 809), 81, and 893.

(2) All compliance units that provide professional services as defined in paragraph (a)(1) of this section, regardless of the proportion of the compliance unit's total revenue that is derived from professional services, are expected to comply with the professional-fee standard for that portion of the compliance unit's revenue. For other lines of business, the compliance unit should comply with the applicable price standard in 705A or 705C.

(b) *Definitions.*

(1) A compliance unit's *professional-fee carryover factor* is 13.5 percent minus the sales-weighted average percentage change in fees from the base year to the second program year. If that difference is negative but the compliance unit was in compliance with the second-year price standards, its professional-fee carryover factor is zero

(c) *Professional-Fee Standard.* A compliance unit complies with the professional-fee standard if

(1) its sales-weighted average percentage change in fees from the new base year to the third year plus its professional-fee carryover factor does not exceed 7.5 percent, and

(2) the percentage increase in the fee for any single service from the base year to the third year does not exceed 29 percent.

The period used to determine sales-volume weights should be a period of time that is representative of normal business operations.

§ 705.47 Federal, State, and local government enterprises, private nonprofit enterprises, and government-subsidized private companies.

(a) Subject to paragraph (c), government enterprises as defined in paragraph (b) and private nonprofit enterprises should comply with the price standard in 705A or the appropriate alternative standard in 705C.

(b) A government enterprise is any unit of a Federal, state, or local government for which data are available to determine compliance and that satisfies either of the following conditions:

(1) It is the U.S. Postal Service, a college or university, a toll facility, an alcoholic-beverage store, a commissary (retail outlet), a parking system, a port authority, an airport, an electric, gas, sewer, water, or other utility, a transportation service, a housing authority, or a health facility other than a hospital; or (2) Its base-year operating revenue (i.e., revenue from sales of goods and services) equals at least 50 percent of base-year operating expenses.

(c) Government enterprises and private compliance units that receive government operating subsidies should use a subsidy-adjusted price change for the base period, the three program years. In each period, the subsidy-adjusted price change is the weighted sum of the percentage price change and the percentage change in the operating subsidy per unit of output during that period. The price change is weighted by revenues from sales of goods and services divided by the sum of these revenues and total operating subsidies. The change in the subsidy per unit of output is weighted by total operating subsidies divided by the sum of revenues from sales of goods and services and total operating subsidies. During the base period, weights are determined by using the revenues and operating subsidies in the last calendar or complete fiscal quarter of 1975. During the program period, weights are determined using the revenues and operating subsidies in the last calendar or fiscal quarter completed before October 2, 1978.

(d) If a government enterprise or a private nonprofit enterprise cannot make the calculations required for the price limitation in § 705.2 or the appropriate modified price standard, or as a result of uncontrollable cost increases, compliance with that limitation or standard would cause a significant deterioration of the compliance unit's profit or operating-surplus position, it should comply with the profit limitation in § 705.6(a), substituting the terms "operating margin" for "profit margin" and "operating surplus" for "profits." If the compliance unit utilizes fund accounting, operating surplus is the budget line item "net increases in current fund balance" and operating margin is operating surplus divided by operating funds or revenues. Compliance units reporting deficits in their current fund balance may be excepted from this standard if they qualify for an exception based on undue hardship or gross inequity.

§ 705.48 Price standard for medical and dental insurance providers. [Reserved]

§ 705.49 Price standard for providers of insurance other than medical and dental insurance. [Reserved]

§ 705.50 Standard for financial institutions. [Reserved]

§ 705.51 Price standard for passthrough of gold and silver increases.

(a) Eligibility.

(1) A compliance unit is eligible for a gold and silver passthrough if it measures its compliance under the price limitation in § 705.2 and its base-quarter costs for gold and silver constituted one percent or more of its base-quarter revenue from products that contain gold

or silver and that are not excluded under § 705.4.

(2) To determine whether or not a compliance unit meets the one-percent threshold, the cost of gold (silver) in the base quarter is the quantity of gold (silver) included in products not excluded under § 705.4 that are sold during the base quarter, multiplied by the average price of gold (silver) during the base quarter (defined in § 705.70).

(3) In calculating the base-quarter cost of gold and/or silver, prices of only (i) primary and secondary shapes and forms (such as bar and bullion) and (ii) mill shapes and forms (such as wire, plate, strip, sheet, powder, granules, coil, rod, and tubing) should be used. If the material is in alloy form, only those shapes containing at least 40 percent gold and silver (by weight) may be used in the calculation of base-quarter costs. Costs of gold and silver used in products excluded under § 705.4 may not be used in the calculations.

(b) Modified Standard.

(1) A compliance unit that is eligible for the gold and silver passthrough complies with the price limitation if its modified three-year price change, defined in § 705.70, is not greater than its price limitation as defined in § 705.2.

(2) A compliance unit that is eligible for the gold and silver passthrough complies with the intermediate price limitations if its intermediate modified price changes, defined in § 705.70, are no greater than the intermediate price limitations in § 705.3.

Subpart D—Definitions

§ 705.60 Base period.

The base period is the period from the last complete fiscal or calendar quarter of 1975 to the last complete fiscal or calendar quarter of 1977.

§ 705.61 Base-period rate of price change.

The base-period rate of price change is the sales-weighted average of the percentage changes in product prices form the last calendar or complete fiscal quarter of 1975 to the corresponding quarter of 1977, expressed at an annual rate. It may be computed using the following formula:

$$BPRC = \left(\sqrt{\sum_i S_i \frac{P_i(77)}{P_i(75)}} - 1.0\right) \times 100$$

where—

BPRC = the base-period rate of price change;

$P_i(77)$ = price of the *ith* product in the last complete fiscal or calendar quarter of 1977;

$P_i(75)$ = price of the *ith* product in the last complete fiscal or calendar quarter of 1975;

S_i = *ith*-product sales share (i.e., the *ith*-product sales divided by total sales) in the last complete fiscal or calendar quarter in 1975; and

Σ_i = the summation sign, where the subscript i runs over all products not excluded in 705.4

The base-period rate of price change compounded for three years is—

$(1.0+BPRC/100)^3-1.0\times100$.

The choice of fiscal or calendar quarters must be consistent throughout the compliance unit's calculations. If seasonal factors are important, the weights, S_i, can be calculated using data for the entire base period. The weights used to calculate the base-period rate of price change in the third year should be consistent with those used in the first and second program years.

§ 705.62 Base quarter.

The base quarter is either (a) the compliance unit's last complete fiscal quarter before October 2, 1978, or (b) the calendar quarter July 1, 1978, through September 30, 1978, except as otherwise specified in a modified price standard.

§ 705.63 Base year.

The base year is the four calendar or fiscal quarters ending before October 2, 1978, except as otherwise specified in a modified price standard.

§ 705.64 Company.

A company is any independent contractor, sole proprietorship, partnership, corporation, association, estate, trust, or any other entity, however organized, that is engaged in domestic business operations and that is neither controlled nor owned by another domestic entity. The term "company" includes Federal, state, and local government entities.

§ 705.65 Compliance unit.

(a) A compliance unit is a company or part of a company separately identified for purposes of compliance with the pay or price standards. An unconsolidated, controlled entity must be treated as a separate compliance unit.

Entities that are consolidated should be consolidated in accordance with 17 CFR 210.4–01 to –09 prescribed by the Securities and Exchange Commission.

(b) Subject to the special provisions that apply to companies (or parts of companies) eligible for a modified price standard (even though that company (or part of it) may not elect to comply with such a standard), one or more parts of a consolidated company may be treated as a separate unit for purposes of complying with the price and pay standards if:

(1) Each part maintains accounting records that permit the Council to ascertain whether the prices and profits of each part accurately reflect the economic realities of its operations,

(2) Allocation of overhead among the parts is made in a consistent and reasonable manner, as if the parts were not commonly owned,

(3) Transfers between parts are valued as if they were arms-length transactions, and

(4) Internal accounting procedures adhere to generally accepted accounting principles and procedures, consistently and historically applied.

§ 705.66 Custom product.

A custom product is one that is produced specifically to the unique specifications of a particular buyer. Such products must have characteristics that are substantially different from those of any other product sold by the company. A product is not substantially different merely because of differences in style, packaging, or quality. If such differences are significant, appropriate adjustments should be made when measuring prices.

§ 705.67 Employee.

Employee is any individual residing in the United States who is either an employee within the meaning of Section 3121(d) of the Internal Revenue Code, 26 U.S.C., or the National Labor Relations Act, as amended, 29 U.S.C. 151 *et seq.*

§ 705.68 First program year.

A compliance unit's first program year is the one-year period immediately following its base quarter.

§ 705.69 Future-value incentive plans.

Future-value incentive plans include any long-term plans under which units (shares, stock options, awards, shares subject to option, or investment amounts) are granted or issued, the compensation value of which will not be known until some future time. Examples of these include qualified and nonqualified stock options, performance share plans, performance unit plans, stock appreciation rights, restricted stock or property plans, phantom-stock plans, and book-value plans.

§ 705.70 Modified three-year price change for gold and silver passthrough.

The modified three-year price change is defined by the following formula:

$$MTHYPC = \left[\left(\sum_i S_i \times \frac{P_i(t) - PT(t)}{P_i(b)}\right) - 1.0\right] \times 100$$

where—

MTHYPC = modified three-year price change,

S_i = the ith-product sales share in the base quarter,

$P_i(t)$ = the price of the ith product in the tth program quarter,

$P_i(b)$ = the price of the ith product in the base quarter,

PT(t) = passthrough factor in the tth program quarter,

and

Σ_i = the summation sign, where the subscript i runs over all products not excluded under 705.4.

The passthrough factor is determined from the following formula:

$$PT(t) = \frac{G_i(t)}{Q_i(t)} \times P_g(t) + \frac{S_i(t)}{Q_i(t)} \times P_s(t)$$

where—

$G_i(t)$ = amount of gold used in producing product i sold in the tth program quarter (include only the gold and silver inputs specified in 705.51(a)(3)),

$S_i(t)$ = amount of silver used in producing product i sold in the tth program quarter (include only the gold and silver inputs specified in 705.51(a)(3)),

$Q_i(t)$ = total number of units of product i sold in the tth program quarter,

$P_g(t)$ = the difference between the price of gold in the tth quarter and the price that would have resulted if gold prices had increased from the base quarter to the tth quarter at the same rate as during the base period, compounded for three years,

and

$P_s(t)$ = the difference between the price of silver in the tth program quarter and the price that would have resulted if silver prices had increased from the base quarter to the tth program quarter at the same rate as during the base period, compounded for three years.

In calculating $P_g(t)$ and $P_s(t)$, the intermediate base-period changes (compounded for three years) are 15.77 percent, 17.67 percent, 19.60 percent, and 21.56 percent for gold (14.41 percent, 16.13 percent, 17.88 percent, and 19.66 percent for silver) for the nineth, tenth, eleventh and twelfth quarters. (These percentages are calculated by compounding the average quarterly rate of change during the base period, compounded for three years, over the appropriate number of quarters.)

Gold (silver) prices are calculated by taking the simple arithmetic averages of the closing prices on the COMEX in the base quarter. The base-quarter gold price is $203.030 per troy ounce ($5.472 per troy ounce for silver).

The values of $P_g(t)$ and $P_s(t)$ for the nineth, tenth, eleventh, and twelfth quarters of the program period will be calculated by the Council when the gold and silver prices in these quarters are known.

§ 705.71 New base year.

The new base year is the four calendar of fiscal quarters ending before October 1, 1980, except as otherwise specified in a modified price standard.

§ 705.72 New product.

A new product is one that is introduced during the base period or during the program period. A product does not become new merely because of changes in specifications, style, packaging, or quality. If such changes are significant, appropriate adjustments should be made in measuring prices (for example, quality decreases should be reflected as price increases and quality increases as price decreases).

§ 705.73 Organized exchange market.

A market qualifies as an organized exchange market only if the following three conditions are satisfied:

(a) The market is established for a specific purpose and is governed by a defined set of rules regarding (1) eligibility for participation in the market, (2) the roles of participants (including buyers, sellers, and middlemen or specialists), (3) offers, acceptances, and rejections of bids, and (4) the procedure for an exchange;

(b) The exchange prices are determined exclusively within the act of exchange and are unaffected by the requirements or resources of individual buyers or sellers; and

(c) The price determined on the exchange is equal to the price paid by the individual taking physical delivery of the commodity.

§ 705.74 Pay.

Pay includes the following:

(a) The straight-time wage and salary paid during the compliance unit's customary pay period, including, where applicable, payments for shift differentials, skill differentials, and cost-of-living adjustments;

(b) Incentive pay and other forms of income such as:

(1) Sales commissions and production-incentive pay;

(2) Bonuses and other annual incentive compensation charges when earned (that is, when the services are performed that generate the compensation);

(3) Compensation from long-term incentive plans (other than those covered under § 705.14, new future-value incentive plans, and other similar compensation arrangements charged when accrued; and

(4) Job perquisites and other forms of compensation not covered elsewhere in this definition but reported as income under the Internal Revenue Code and its interpretive regulations and rulings.

(c) Employer contributions or costs for the following fringe benefit items:

(1) Pay for time not worked (e.g., paid vacations and holidays, sick leave and other paid leave);

(2) Saving and thrift plans such as qualified stock bonus plans, qualified profit-sharing plans, employee stock-ownership plans, and other qualified defined-contribution plans;

(3) Qualified defined-benefit retirement plans;

(4) Health benefit plans; and

(5) Life insurance, accident insurance, legal assistance, educational assistance, and other plans resulting in benefits to employees but not reported as income.

Pay does not include overtime wages as long as the conditions of that pay are unchanged. Also, pay does not include employer contributions for legally-mandated benefit programs.

§ 705.75 Pay rate.

An employee unit's pay rate in any quarter should be determined in a manner consistent with the employer's accounting practices. Pay rates should be constructed as pay per straight-time hour worked. Pay rates should be the average rates for the employee unit over the quarter or as of the last customary pay period within the quarter. When employer costs for certain pay elements are incurred irregularly (for example, bonus payments and vacation pay) these items should be included according to the pay programs in effect at the end of the quarter and should be included in pay-rate computations as though they were incurred evenly over time. For employees not compensated on an hourly basis, an estimate of straight-time hours worked should be made and applied consistently. The method used to compute pay rates must be applied consistently in all measurement periods.

§ 705.76 Product.

A product is a category of goods and/or services that is established by the compliance unit for purposes of complying with the price standard. These groupings should be established in such a manner that the measured price changes for each product reasonably reflect the changes in the prices of the individual goods and services contained within the category. The method of establishing product groups must be applied consistently in all measurement periods.

§ 705.77 Product price.

The price of a product during a quarter is computed by dividing the revenues from sale or lease of the product by the number of units sold or leased. Prices may be measured at the end of a calendar or fiscal quarter only if prices have remained substantially unchanged during the quarter. A product price may be determined from a sample of the individual goods and services in the product category, in which case the sampling methods must follow sound statistical procedures. List prices may be used only if percentage changes in these prices are representative of percentage changes in actual transaction prices.

§ 705.78 Profit margin.

A compliance unit's profit margin is the ratio of profit to net sales and/or revenues.

(a) Profit is defined as the sum of item 14 and items 11 through 13 minus items 7 through 10 in 17 CFR 210.5–03. Briefly, profit is "income or loss before income tax expense" minus dividend income, interest or profit on securities, and miscellaneous other income, plus interest and amortization of debt discount and expense, losses on securities, and miscellaneous income deductions. The profits on goods and services excluded from calculations under Section 705.4 should not be excluded in the calculation of profits.

(b) Net sales and/or revenues consist of net sales of tangible products (gross sales less discounts, returns, and allowances), operating revenues of public utilities, and other revenues such as royalties, rents, and the sale of services and intangible products (e.g., engineering, research and development, and other professional services). This definition is consistent with 17 CFR 210.5–03, items 1A, 1B, and 1C. The revenues from goods and services excluded from calculations under § 705.4 should not be excluded in the calculation of net sales and/or revenues.

§ 705.79 Second program year.

The second program year is the one-year period immediately following the compliance unit's first program year.

§ 705.80 Third year.

The third year is the one-year period immediately following the compliance unit's second program year.

§ 705.81 Three-year price change.

The three-year price change is the sales-weighted average of the percentage changes in product prices from the base quarter to the corresponding quarter of 1981. It may be computed using the following formula:

$$THYPC = \left[\left(\sum_i S_i \frac{P_i(81)}{P_i(78)}\right) - 1.0\right] \times 100$$

where—

THYPC = the three-year price change;

$P_i(81)$ = The price of the *ith* product in the 1981 quarter corresponding to the base quarter;

$P_i(78)$ = the price of the *ith* product in the base quarter;

S_i = *ith*-product sales share (i.e., the *ith* product sales divided by total sales) in the base quarter; and

Σ_i = the summation sign, where the subscript i runs over all products not excluded in 705.4

The choice of fiscal or calendar quarters must be consistent throughout the compliance unit's calculations. If seasonal factors are important, the weights, S_i, can be calculated using data for the entire base year. Alternatively, the same weights used to calculate the base-period rate of price change can be used.

[FR Doc. 80–29579 Filed 9–23–80; 8:45 am]

BILLING CODE 3175–01–M

federal register

Wednesday
September 24, 1980

Part IV

Department of Labor

Occupational Safety and Health Administration

Occupational Exposure to Lead; Limited Reopening of Rulemaking Record; Notice of Comment Period and Informal Public Hearing

DEPARTMENT OF LABOR

Occupational Safety and Health Administration

29 CFR Part 1910

[Docket No. H-004E]

Occupational Exposure to Lead; Limited Reopening of Rulemaking Record; Notice of Comment Period and Informal Public Hearing

AGENCY: Occupational Safety and Health Administration (OSHA), Labor.

ACTION: Notice of reopening of the lead rulemaking record; notice of comment period and informal public hearing.

SUMMARY: This notice reopens the rulemaking record for the lead standard (29 CFR 1910.1025) to receive specific information relating to the feasibility of meeting the permissible exposure limit (PEL) specified in the lead standard through engineering controls and work practices in certain industries. The notice is published pursuant to a Court Appeals remand of the feasibility question as to certain specified industries. This notice also schedules a period for receipt of written comments and an informal public hearing on the question of feasibility.

DATES: Written comments will be received until October 27, 1980. An informal public hearing will be held on November 5, 6, and 7, 1980. All notices of intention to appear at the public hearing and all written testimony and documentary evidence which will be introduced into the hearing record must be received by October 27, 1980.

ADDRESS: Comments should be sent to: Docket Officer, Docket H-004E, Room S6212, U.S. Department of Labor, Washington, D.C. 20210. Notices of intention to appear and written testimony should be sent to: Mr. Clarence Page, OSHA, Division of Consumer Affairs, Room N3635, U.S. Department of Labor, Washington, D.C. 20210. The public hearing will be held in the Auditorium, Frances Perkins Labor Department Building, 3rd Street and Constitution Avenue, NW., Washington, D.C. 20210.

FOR FURTHER INFORMATION CONTACT: Dr. Robert P. Beliles, Occupational Safety and Health Administration, Room N3718, U.S. Department of Labor, Washington, D.C. 20210, 202-523-7081.

SUPPLEMENTARY INFORMATION: On October 3, 1975, OSHA proposed a standard for occupational exposure to lead (40 FR 45934) to replace the permissible exposure limit which had been adopted from a national consensus standard pursuant to § 6(a) of the Occupational Safety and Health Act (ACT). A lengthy hearing in Washington, D.C. and two regional hearings in St. Louis, Missouri, and San Francisco, California, were held in the Spring of 1977. In the fall of the same year, hearings were held for the receipt of additional information on certain specific issues, including medical removal protection. The hearing record was closed in January of 1978. On November 14, 1978, a final standard was published in the **Federal Register** ((43 FR 52952); supplemental attachmets published November 21, 1978, (43 FR 54354)) which limited occupational exposure to airborne concentrations of lead to 50 $\mu g/m^3$ (micrograms per cubic meter) based on an eight-hour time weighted average (TWA). Additional protective provisions included environmental monitoring, recordkeeping, employee education and training, medical surveillance, medical removal protection, hygiene facilities, and other requirements.

Immediately after promulgation, the lead standard was challenged by both industry and labor, in several U.S. Courts of Appeals. All cases were transferred and consolidated in the U.S. Court of Appeals for the District of Columbia Circuit. Simultaneously, various parties sought administrative reconsideration and stays of the regulation, one of which was granted. On March 1, 1979, the D.C. Circuit partially stayed the lead standard by delaying the requirement for installing engineering controls and instituting work practices. However, enforcement of the PEL and provisions for environmental monitoring, recordkeeping, employee education and training, medical survelliance, and medical removal protection was permitted to begin on March 1, 1980.

In a lengthy opinion issued on August 15, 1980, the United States Court of Appeals for the District of Columbia Circuit, per Chief Judge Wright, upheld the validity of OSHA's lead standard in most respects. However, the Court found that OSHA failed to present substantial evidence or adequate reasons to support the feasibility of the standard, with respect to certain industries, and remanded the standard to the Agency for reconsideration of the question of the technological and economic feasibility of the standard for those industries.

With respect to the following industries, the Court found OSHA's analysis of the feasibility of the standard to be adequate and upheld the validity of the entire standard: Primary smelting; secondary smelting; printing; can manufacturing; battery manufacturing; paint and coatings manufacturing; ink manufacturing; wallpaper manufacturing; electronics manufacturing; and gray-iron foundries.

The Court also found that:

> "OSHA failed to present substantial evidence or adequate reasons to support the feasibility of the standard for the following industries: nonferrous foundries; pigment manufacture; shipbuilding; auto manufacture; solder manufacture; wire patenting; pottery; brick manufacture; agricultural pesticides manufacture; leather manufacture; pipe galvanizing; gasoline additives manufacture; linoleum-rubber-plastics manufacture; paint spraying; ammunition manufacture; smelting and refining of zinc, silver, gold, platinum, copper, and aluminum; machining; lead burning; glass manufacture; textile manufacture; book binding; steel alloy manufacture; terne metal manufacture; glass polishing and spinning; cutlery manufacture; diamond processing; plumbing; jewelry manufacture; pearl processing; casting; cable coating; electroplating; explosives manufacture; lamp manufacture; sheet metal manufacture; tin rolling; telecommunications; and independent collecting and processing of scrap lead (excluding collecting and processing that is part of a secondary smelting operation)." (*United Steelworkers of America* v. *Marshall*, No. 79-1048 (D.C. Cir. Aug. 15, 1980), slip opinion, pg. 245.)

The Court did not vacate any portion of the lead standard. Rather, it stayed the enforcement of 29 CFR 1910.1025(e)(1) (requiring compliance with the PEL through engineering controls and work practices) for those industries for which OSHA failed to present substantial evidence or adequate reasons to support the feasibility of the standard. The Court gave OSHA six months in which to complete its reassessment of the feasibility issue.

Accordingly, OSHA hereby reopens the lead record for the limited and express purpose of soliciting and receiving additional information pertaining to the technological and economic feasibility, including the time necessary for meeting the 50 $\mu g/m^3$ PEL solely by engineering controls and work practices for those industries for which the Court ruled OSHA had not adequately determined feasibility or for any other industries not ruled upon in the Court's decision. OSHA also expects to put into the record some additional evidence concerning these issues. Evidence previously submitted on these issues will be considered along with any new evidence, and need not be resubmitted. Information is not requested concerning the ten industries for which the standard's feasibility has been upheld or pertaining to issues other than feasibility.

The following questions are considered relevant in determining the feasibility of the PEL for a given industry. Persons possessing or having access to information pertinent to any of the following questions are requested to submit it to OSHA:

1. In which industries, other than those identified above, do exposures to lead occur? In which standard industrial classification (SIC) codes are these industries located?

2. What are the size, age, economic life (plant and equipment), location and number of firms and plants in each of these industries?

3. How many employees are exposed to lead in each of the industries?

4. In what processes do lead exposures occur? What are the sources of exposure?

5. What job classifications or position descriptions are used to describe employees exposed to lead in these processes?

6. What are the chemical and physical characteristics of the lead to which these employees are exposed (e.g., name of compound, aerosol size, solubility)?

7. Does exposure result from the inhalation or ingestion of lead, or both?

8. What is the nature of exposure (air concentrations, duration and frequency)?

9. How many workers are exposed to les than 30 $\mu g/m^3$ of lead as an eight hour TWA?

10. How many workers are exposed to greater than 30 $\mu g/m^3$ but less than 50 $\mu g/m^3$ TWA?

11. How many workers are exposed in excess of 50 $\mu g/m^3$ TWA?

12. What are the blood lead levels for employees exposed in (9), (10), and (11)? Are there any other medical indicators which are useful in assessing environmental conditions?

13. Are there examples of operations or processes where control of exposure to lead to 50 $\mu g/m^3$ has been achieved? Please describe.

14. If control has not been achieved in the industry, which of the following methods are available to achieve such control? Please provide a detailed discussion of the use of these controls and also the time necessary for implementation.

a. Engineering controls—ventilation/collection, isolation/containment, substitution of product or process, modification of process or equipment (e.g., booths, islands, cabs), other.

b. Work practices—housekeeping, administrative controls—employee rotation or scheduling of work operations, other.

15. Are there any unique conditions in the industry which would preclude the use of engineering controls and work practices to reduce exposures?

16. In what operations should personal protective equipment (including respirators) be required?

17. What regulatory activities of State agencies or other Federal agencies affect worker exposure to lead in the industry?

18. Are there other OSHA standards that require the use of engineering controls which would also effect airborne exposure levels to lead?

19. Have there been technological improvements or changes in the industry for the purpose of improving productivity or product quality which have also resulted in reductions in lead exposures?

20. What are the availability, price, and serviceability of substitutes?

21. What were the total annual volume and dollar value of productions, shipments, and inventories for at least the last 5 years?

22. What were the total annual investments categorized as replacement, expansion, modernization, and environmental health and safety related expenditures for at least the last 5 years?

23. What were the retained earnings, after tax income, total assets, stockholders' equity, net worth, debt-equity ratios, and depreciation charges for at least the last 5 years?

24. What were the rates of return on assets, equity or net worth for the at the least the last 5 years?

25. What is the degree of market concentration in the industry? (Please give special attention to the role of small businesses and approximate numbers of firms in the industry each year.)

26. What is the geographic dispersion of the industry and its customers?

27. What were the annual volume and dollar value or imports and exports for at least the last 5 years?

28. What were the total annual employment and labor turnover for the industry for at least the last 5 years?

Each employer who has employees exposed to lead is requested to provide specific information related to the above questions concerning his firm or plant. Additionally, the following information should also be provided:

1. Since 1971, what engineering controls and work practices have been implemented to control lead exposure? Provide copies of engineering feasibility studies, cost estimates, exposure records (especially those required to be kept by the new standard) blood lead determinations, cost estimates (capital and operating) and time necessary for implementation.

2. Were any benefits other than reduced lead exposure derived from the implementation of engineering controls and work practices such as increased productivity, product improvement, or reductions in absenteeism?

Public Participation

OSHA is aware of the limited period of time this notice provides for the filing of information and notices of intention to appear. However, the Court of Appeals, in its remand, has given OSHA a timetable of six months to reassess the feasibility issue. OSHA believes that an expedited supplementary rulemaking, with comment period and public hearing, is the most fair and effective means to gather and evaluate the necessary information in so short a period. Accordingly, OSHA cannot grant any requests for extensions.

In addition to the request for written information, which should be submitted to the Docket Office, OSHA is providing an opportunity under section 6(b)(3) of the Act and 29 CFR Part 1911, to submit oral testimony concerning the hearing issues at an informal hearing scheduled to begin at 9:30 a.m., November 5, 1980, in the Auditorium, Frances Perkins Labor Department Building, 3rd Street and Constitution Avenue, NW., Washington, D.C. 20210.

Notice of Intention To Appear and Written Comments

Persons desiring to participate at the hearing must file a notice of intention to appear by October 27, 1980, with Mr. Clarence Page, OSHA, Division of Consumer Affairs, Room N3635, U.S. Department of Labor, 3rd Street and Constitution Avenue, NW., Washington, D.C. 20210. Telephone (202) 523–8024. Persons who do not intend to appear at the hearing may submit written comments on the specified issues, by October 27, 1980, to the Docket Office, Room S–6212, Docket H–004E, U.S. Department of Labor, Washington, D.C. 20210. Telephone (202) 523–7894.

The notices of intention to appear, which will be available for inspection and copying at the OSHA Docket Office during business hours, must contain the following information:

1. The name, address, and telephone number of each person to appear;

2. The capacity in which the person will appear;

3. The approximate amount of time required for the presentation;

4. The specific issues that will be addressed;

5. A detailed statement of the position that will be taken with respect to each issue addressed; and

6. Whether the party intends to submit documentary evidence, and if so, a

detailed summary of the evidence to be adduced in support of the position.

Filing of Testimony and Evidence Before Hearing

AAny party requesting more than 15 minutes for presentation at the hearing or submitting documentary evidence, must provide, in quadruplicate, the complete text of its testimony, including all documentary evidence to be presented at the hearing, to the OSHA Division of Consumer Affairs, where they will be available for inspection and copying. This material must be received by October 27, 1980. Each submission will be reviewed in light of the amount of time requested in the notice of intention to appear and in light of the very limited time available for the public hearings. In instances where the information contained in the submission does not justify the amount of time requested, a more appropriate amount of time will be allocated and the participant will be notified of that fact.

Conduct of the Hearings

The hearings will commence at 9:30 a.m., November 5, 1980, with the resolution of any procedural matters relating to the proceeding. The hearing will be presided over by an Administrative Law Judge who will have all the powers necessary and appropriate to conduct a full and fair informal hearing as provided in 29 CFR Part 1911, including the powers:

1. To regulate the course of the proceedings;
2. To dispose of procedural requests, objections, and comparable matters;
3. To confine the presentation to the matters pertinent to the issues raised;
4. To regulate the conduct of those present at the hearing by appropriate means;
5. In the Judge's discretion, to question and permit questioning of any witness; and
6. In the Judge's discretion, to keep the record open for a reasonable stated time to receive written information and additional data, views, and arguments from any person who has participated in the oral proceeding.

Following the close of the hearing, the presiding Administrative Law Judge will certify the record of the hearing to the Assistant Secretary of Labor for Occupational Safety and Health.

The question of the feasibility of achieving the PEL through engineering controls and work practices for the industries indicated above will be reviewed in light of all testimony and written submissions received as part of this record, including information previously submitted, and a decision will be forthcoming.

This notice was prepared under the direction of Eula Bingham, Assistant Secretary of Labor for Occupational Safety and Health, Frances Perkins Labor Department Building, 3rd Street and Constitution Avenue, NW., Washington, D.C. 20210.

(Secs. 6, 8, 84 Stat. 1593–1596, 1599, (29 U.S.C. 655, 657); Secretary of Labor's Order 8–76 (41 FR 25059); (29 CFR 1911))

Signed at Washington, D.C., this 22nd day of September, 1980.

Eula Bingham,

Assistant Secretary of Labor.

[FR Doc. 80–29756 Filed 9–23–80; 10:27 am]

BILLING CODE 4510–26–M

Reader Aids

Federal Register

Vol. 45, No. 187

Wednesday, September 24, 1980

INFORMATION AND ASSISTANCE

Questions and requests for specific information may be directed to the following numbers. General inquiries may be made by dialing 202-523-5240.

Federal Register, Daily Issue:

202-783-3238	Subscription orders and problems (GPO)
	"Dial-a-Reg" (recorded summary of highlighted documents appearing in next day's issue):
202-523-5022	Washington, D.C.
312-663-0884	Chicago, Ill.
213-688-6694	Los Angeles, Calif.
202-523-3187	Scheduling of documents for publication
523-5240	Photo copies of documents appearing in the Federal Register
523-5237	Corrections
633-6930	Public Inspection Desk
523-5227	Index and Finding Aids
523-5235	Public Briefings: "How To Use the Federal Register."

Code of Federal Regulations (CFR):

523-3419	
523-3517	
523-5227	Index and Finding Aids

Presidential Documents:

523-5233	Executive Orders and Proclamations
523-5235	Public Papers of the Presidents, and Weekly Compilation of Presidential Documents

Public Laws:

523-5266	Public Law Numbers and Dates, Slip Laws, U.S.
-5282	Statutes at Large, and Index
275-3030	Slip Law Orders (GPO)

Other Publications and Services:

523-5239	TTY for the Deaf
523-5230	U.S. Government Manual
523-3408	Automation
523-4534	Special Projects
523-3517	Privacy Act Compilation

FEDERAL REGISTER PAGES AND DATES, SEPTEMBER

58097-58324.....2
58325-58502.....3
58503-58800.....4
58801-59134.....5
59135-59296.....8
59297-59548.....9
59549-59830.....10
59831-60398.....11
60399-60876.....12
60877-61286.....15
61287-61592.....16
61593-62006.....17
62007-62408.....18
62409-62778.....19
62779-62964.....22
62965-63260.....23
63261-63478.....24

CFR PARTS AFFECTED DURING SEPTEMBER

At the end of each month, the Office of the Federal Register publishes separately a list of CFR Sections Affected (LSA), which lists parts and sections affected by documents published since the revision date of each title.

1 CFR

51.....59297
475.....58505
476.....58809

Proposed Rules:

Ch. I.....59174
305.....61636

3 CFR

Administrative Orders:

Presidential Determination:

September 8, 1980.....59549
No. 80-18 of May 2, 1980 (Amended by No. 80-24 of August 7, 1980).....62007
No. 80-24 of August 7, 1980.....62007
No. 80-26 of September 12, 1980.....62779

Executive Orders:

10402 (Revoked by 12234).....58801
11239 (Superseded by 12234).....58801
12082 (Revoked by EO 12239.....62967
12154 (Amended by 12236 and 12237).....58805, 58807
12198 (Amended by EO 12233).....58503
12233.....58503
12234.....58801
12235.....58803
12236.....58805
12237.....58807
12238.....60877
12239.....62967

Memorandum:

September 19, 1980.....62965

Proclamations:

4707.....61589
4768.....61589
4786.....58325
4787.....58327
4788.....58329
4789.....58331
4790.....59135
4791.....60399
4792.....61589
4793.....62409
4794.....62781
4795.....62969

4 CFR

331.....62009
332.....62009
351.....62009

5 CFR

212.....62413
213.....58810-58813, 59297, 62413
214.....62413
317.....62413
351.....60401, 62971

6 CFR

705.....63462

7 CFR

2.....62783
6.....58333
14.....58505
29.....62972
47.....59298, 62973
331.....60402
411.....62019
706.....62785
713.....62785
724.....62415
760.....59299
906.....62973
908.....58509, 59551, 59831, 62018
910.....58097, 58814, 60403, 62416
926.....62974
932.....58097, 62975
944.....62975
946.....58098
947.....60404
966.....63261
1030.....61593
1040.....60406
1079.....62787
1421.....60407, 58333-58334, 62788, 62789
1427.....59831, 60879
1464.....58509
1701.....61287
1951.....58814, 61594

Proposed Rules:

Ch. XXVIII.....61314
15c.....61309
68.....61937
810.....60848
904.....62429
944.....62429
948.....60446
965.....63288
981.....60447
1079.....58131
1133.....62431
1139.....58366
1421.....60914
1701.....62431
1822.....62432
1940.....58557
1942.....58557
1980.....58557

2852 ... 59325

8 CFR

238 ... 58098, 58510

Proposed Rules:

Ch. I ... 58368
212 ... 58131
235 ... 58131
299 ... 58131

9 CFR

3 ... 63261
82 ... 61594, 63262
92 ... 62026

Proposed Rules:

78 ... 59831
313 ... 60448, 62477
317 ... 58815
318 ... 58815
381 ... 58815

10 CFR

2 ... 62027
50 ... 62789
205 ... 59786, 61562
206 ... 59786, 61576, 63262
212 ... 58510, 59137
376 ... 62029
430 ... 62417
456 ... 63432
708 ... 61576, 63262
797 ... 62031
1008 ... 61576
1506 ... 60371, 62032

Proposed Rules:

205 ... 58871
211 ... 58788, 59818, 61268, 62478
212 ... 58871, 62090
430 ... 58132
503 ... 62090
504 ... 62090
506 ... 62090
710 ... 63292
1534 ... 60362

11 CFR

100 ... 58820
106 ... 58820
110 ... 58820
140 ... 58820
141 ... 58820
142 ... 58820
143 ... 58820
144 ... 58820
145 ... 58820
146 ... 58820
9001 ... 58820
9002 ... 58820
9003 ... 58820
9004 ... 58820
9005 ... 58820
9006 ... 58820
9007 ... 58820

12 CFR

204 ... 58099, 58820
225 ... 61595
226 ... 62976
335 ... 60885
545 ... 61596
563 ... 61596
760 ... 58101

Proposed Rules:

226 ... 63295
335 ... 62480
336 ... 58876

13 CFR

101 ... 59299, 60895
540 ... 61597

Proposed Rules:

121 ... 59587
122 ... 61937

14 CFR

11 ... 60154
21 ... 60154
23 ... 60154
25 ... 60154
27 ... 60154
29 ... 60154
31 ... 60154
33 ... 60154
35 ... 60154
39 ... 58102, 58103, 58512, 59138–59141, 59832–59837, 60896, 62790–62793
43 ... 60154
45 ... 60154
71 ... 58104, 58105, 59837–59839, 60896–60897, 62794, 62795
73 ... 58106
75 ... 60898, 62032
91 ... 60154
93 ... 62406
97 ... 59141
152 ... 58107
154 ... 58107
155 ... 58107
159 ... 62406
204 ... 60408
223 ... 58821
385 ... 61609

Proposed Rules:

Ch. I ... 59897, 62837, 62838
39 ... 58133–58136, 59901, 59904, 60919
71 ... 58136, 58140, 58141, 59174, 60920, 62091, 62839–62847
73 ... 58142
75 ... 60921
121 ... 59295, 59905
171 ... 59256
207 ... 61640
208 ... 61640
212 ... 61640
214 ... 61640
380 ... 61640
399 ... 61640

15 CFR

368 ... 59300
369 ... 59300
370 ... 58334, 59300
371 ... 59301
372 ... 58334, 59300
377 ... 58334, 59300, 59302
385 ... 59300
390 ... 59300
504 ... 61550

Proposed Rules:

Ch. III ... 58562
806 ... 60850

16 CFR

13 ... 60408, 60409, 62032
1212 ... 61880

Proposed Rules:

Ch. II ... 62392
13 ... 63000
305 ... 59588
1212 ... 61941

17 CFR

140 ... 58514
200 ... 62418
229 ... 58822
230 ... 58822
231 ... 61609
239 ... 58822
240 ... 58822, 60410
241 ... 59840
249 ... 58822, 58831, 59551
271 ... 62423

Proposed Rules:

1 ... 62847
240 ... 62092
249 ... 58879, 62092

18 CFR

4 ... 58368
35 ... 58335
141 ... 60898
201 ... 59305
204 ... 59305
260 ... 59305, 60898
272 ... 58374
282 ... 59305, 59857, 60900, 61610
284 ... 60418
375 ... 58368
701 ... 58834

Proposed Rules:

141 ... 63296
154 ... 61641
260 ... 63001
270 ... 61643

19 CFR

4 ... 60900
355 ... 58516, 59552

Proposed Rules:

177 ... 60921

20 CFR

404 ... 58107, 59589, 60922, 61315
416 ... 59143, 59589, 61315

Proposed Rules:

416 ... 58563

21 CFR

74 ... 60419, 62978
172 ... 58835, 58836
177 ... 58837
178 ... 58837, 60422
182 ... 58107, 5883/
201 ... 60419
203 ... 60754
291 ... 62694
436 ... 60423
442 ... 60423
510 ... 61287, 62424
520 ... 61288, 62424
522 ... 61287, 62424
524 ... 62425
558 ... 58840, 61288, 62425
561 ... 62979
812 ... 58841
864 ... 60575–60651

Proposed Rules:

7 ... 60449
14 ... 60449
101 ... 58880
109 ... 61315
110 ... 61315
193 ... 58494
225 ... 61315
226 ... 61315
320 ... 63002
357 ... 59540
431 ... 61315
500 ... 61315
509 ... 61315
514 ... 61315
561 ... 58496
870 ... 61316–61317
1030 ... 58143

22 CFR

6 ... 58108
6a ... 58108
161 ... 59553
171 ... 58108, 62426
218 ... 62979

Proposed Rules:

41 ... 59175

23 CFR

1251 ... 59143

Proposed Rules:

625 ... 60922
646 ... 60922
655 ... 60922

24 CFR

107 ... 59510
115 ... 59305
200 ... 59857, 62795
201 ... 59867
203 ... 59561
215 ... 59145
221 ... 60390
234 ... 60390, 60425
235 ... 60390, 62795
236 ... 59147
250 ... 59792
510 ... 59702
570 ... 59306, 59496, 59868
600 ... 59868
700 ... 58336
800 ... 58337
811 ... 62797
841 ... 60836
865 ... 59502
880 ... 62797
881 ... 62797
882 ... 59308, 61612
886 ... 59149
889 ... 59309
890 ... 60394
891 ... 60901
1895 ... 61290
3282 ... 59311

Proposed Rules:

Ch. XX ... 61572
Subtitle A ... 59062
Subtitle B ... 59062
200 ... 58374, 62316
220 ... 59589
221 ... 59589
231 ... 59589
236 ... 59589
430 ... 59907
804 ... 62149
805 ... 62149
841 ... 62149

888 ... 58375

25 CFR

120a ... 62034

Proposed Rules:

43b ... 62151
43c ... 62154
281 ... 60923
700 ... 59175

26 CFR

1 ... 58520, 60902
53 ... 58520
150 ... 63263
301 ... 58520

Proposed Rules:

1 ... 58143, 60450, 62496, 62848, 63296
48 ... 63296
51 ... 63297

27 CFR

6 ... 63242
8 ... 63242
10 ... 63242
11 ... 63242

28 CFR

2 ... 59870, 60427, 62982
22 ... 62037
23 ... 61612

Proposed Rules:

Ch. I ... 58368
2 ... 60451

29 CFR

92 ... 58312
1425 ... 62798
1601 ... 59565
1910 ... 60656
1952 ... 60429
2606 ... 58339
2617 ... 61615

Proposed Rules:

29 ... 58143
1606 ... 62728
1910 ... 63476
1928 ... 58881
1960 ... 58144
2520 ... 62518

30 CFR

716 ... 61259
722 ... 58780
723 ... 58780
843 ... 58780
845 ... 58780
924 ... 58520

Proposed Rules:

886 ... 63002
910 ... 61120
916 ... 58569
917 ... 62157
918 ... 58576
926 ... 58377
931 ... 58594

31 CFR

515 ... 58843

Proposed Rules:

10 ... 58594
240 ... 61318

32 CFR

62 ... 61615
288 ... 59566
623 ... 62038
814 ... 60430
859 ... 62426
887 ... 62427
888 ... 58117

Proposed Rules:

291a ... 63004

33 CFR

207 ... 60430

Proposed Rules:

110 ... 60929
117 ... 62158
161 ... 62158
320 ... 62732
321 ... 62732
322 ... 62732
323 ... 62732
324 ... 62732
325 ... 62732
326 ... 62732
328 ... 62732
329 ... 62732
330 ... 62732

34 CFR

Proposed Rules:

100 ... 58145
230 ... 61950
231 ... 61950

35 CFR

253 ... 59150

36 CFR

7 ... 60430, 61292
28 ... 59569
1228 ... 58339

Proposed Rules:

1201 ... 59590

37 CFR

Proposed Rules:

202 ... 63297

38 CFR

18 ... 63264
21 ... 59311
26 ... 62800

Proposed Rules:

21 ... 59591

39 CFR

310 ... 59871
320 ... 59871

Proposed Rules:

111 ... 60452, 61318
310 ... 60453

40 CFR

51 ... 59874
52 ... 58340, 58526–58528, 59313, 59314, 59577–59580, 61293, 62804–62815, 62982, 63277
81 ... 59150, 59315, 61293, 62816, 62982
117 ... 61617
122 ... 59317
125 ... 61617
180 ... 58121, 60430, 62821, 62985
261 ... 60903
409 ... 59152
423 ... 61617

Proposed Rules:

Ch. I ... 59180
4 ... 60929
51 ... 62170
52 ... 58146, 58598, 58599, 58881, 58923, 59177, 59178 59329, 59334, 59339, 59591, 59597, 60930, 60931, 61319, 61644, 62163, 62172, 62506, 62850, 63004, 63300, 63301
55 ... 58381
65 ... 59341
81 ... 59179, 60941
85 ... 62851
86 ... 61645, 62851
116 ... 59907
117 ... 59907
120 ... 59598
122 ... 59343
123 ... 62170, 63302
125 ... 62509
162 ... 58600, 62852, 63302
163 ... 63302
180 ... 58497–58500, 58600
401 ... 60942
415 ... 58383
717 ... 58384
720 ... 63006
763 ... 61966
770 ... 63010
773 ... 63010

41 CFR

Ch. 1 ... 62986
Ch. 18 ... 58843–58857
Ch. 101 ... 58122, 61304
3–7 ... 60903
5A–1 ... 58341

42 CFR

57 ... 60431
122 ... 59132
405 ... 58123, 59153

Proposed Rules:

405 ... 59734, 60945
442 ... 60945
447 ... 59734
483 ... 60945

43 CFR

2880 ... 59879

Proposed Rules:

4 ... 61322

44 CFR

9 ... 59520, 59538
64 ... 58529–58531, 60904, 62987
65 ... 58341, 60905, 62823
67 ... 58342–58346, 60437, 62065, 62823, 62824
311 ... 59880

Proposed Rules:

59 ... 59346
60 ... 59346
67 ... 58148, 58149, 58601, 59348, 59599, 59602, 60453, 60946, 60953, 62853–62855
360 ... 59344

45 CFR

134 ... 58362
233 ... 58125
400 ... 59318
801 ... 62989
1050 ... 59153
1061 ... 58363, 58534
1068 ... 59153
1076 ... 62065
1601 ... 62071

Proposed Rules

Ch. XI ... 63011
100a ... 59349
100b ... 59349
122b ... 60382
161c ... 62856
161g ... 62859
1010 ... 60954
1060 ... 60954
1225 ... 62512

46 CFR

61 ... 62071
148 ... 60913
502 ... 63278
512 ... 63278
530 ... 62989
531 ... 63278
543 ... 62071

Proposed Rules:

521 ... 58923
536 ... 58385

47 CFR

1 ... 59880, 62072
2 ... 59880, 63279
21 ... 61305
67 ... 62990
68 ... 61631
73 ... 58539, 58540, 59887, 61305, 61632, 63279, 63280
74 ... 61305
76 ... 60186
81 ... 63280
83 ... 60438, 61306
90 ... 59880

Proposed Rules:

Ch. I ... 58608, 62163
61 ... 60955
63 ... 61646
73 ... 58150, 58609–58629, 59350, 59360, 59361, 59908, 61646, 62517, 63302, 63304
76 ... 63011
90 ... 63305

49 CFR

25 ... 59154
172 ... 62079
173 ... 59887, 62079
177 ... 62079
178 ... 59887, 62079
179 ... 62079
195 ... 59161–59166
571 ... 59894, 62083
601 ... 58540
830 ... 59894
1033 ... 58126–58128, 58865, 59167, 59168, 61306, 62822, 62990, 63283
1036 ... 59168, 59169
1048 ... 62085
1051 ... 58128
1053 ... 58865, 61634
1104 ... 58128
1111 ... 62991
1300 ... 60438, 62822
1303 ... 60438, 62822

1304 60438
1306 ..... 60438, 62822
1307 ..... 58128, 58865, 60438, 61634, 62822
1308 ..... 60438, 62822
1309 62822
1310 ..... 58129, 60438, 62822

Proposed Rules:
Ch. III 59177
Ch. X 60956, 61648
173 58632
178 58632
571 60956
658 60306
1002 61326
1041 61649
1042 61333
1048 60455
1080 59909
1111 ..... 58632, 61335, 63012
1136 61649
1137 61326
1138 61337
1311 61337
1331 58166

50 CFR

17 61944
20 ..... 58540, 61532
32 ..... 58552–58554, 58867, 58869, 59171, 59172, 59581, 60441–60444, 62086–62088
33 58554
216 62999
258 60913
285 59586
611 58870
651 61634
661 63287
674 ..... 59172, 63286

Proposed Rules:
17 ..... 58166, 58168, 58171, 59909
23 60455
32 ..... 59602, 59603
33 59603
80 59914
222 ..... 60956, 63309
223 60956
224 60956
225 ..... 60956, 63309
226 ..... 60956, 63309
227 63309
277 60956
601 58632
611 ..... 59914, 60457, 60957
652 61341
656 60457
662 60957
672 59914
680 60957
810 60455

AGENCY PUBLICATION ON ASSIGNED DAYS OF THE WEEK

The following agencies have agreed to publish all documents on two assigned days of the week (Monday/Thursday or Tuesday/Friday). This is a voluntary program. (See OFR NOTICE FR 32914, August 6, 1976.)

Monday	Tuesday	Wednesday	Thursday	Friday
DOT/SECRETARY	USDA/ASCS		DOT/SECRETARY	USDA/ASCS
DOT/COAST GUARD	USDA/FNS		DOT/COAST GUARD	USDA/FNS
DOT/FAA	USDA/FSQS		DOT/FAA	USDA/FSQS
DOT/FHWA	USDA/REA		DOT/FHWA	USDA/REA
DOT/FRA	MSPB/OPM		DOT/FRA	MSPB/OPM
DOT/NHTSA	LABOR		DOT/NHTSA	LABOR
DOT/RSPA	HHS/FDA		DOT/RSPA	HHS/FDA
DOT/SLSDC			DOT/SLSDC	
DOT/UMTA			DOT/UMTA	
CSA			CSA	

Documents normally scheduled for publication on a day that will be a Federal holiday will be published the next work day following the holiday. Comments on this program are still invited. Comments should be submitted to the Day-of-the-Week Program Coordinator, Office of the Federal Register, National Archives and Records Service, General Services Administration, Washington, D.C. 20408

NOTE: As of September 2, 1980, documents from the Animal and Plant Health Inspection Service, Department of Agriculture, will no longer be assigned to the Tuesday/Friday publication schedule.

REMINDERS

The "reminders" below identify documents that appeared in issues of the **Federal Register** 15 days or more ago. Inclusion or exclusion from this list has no legal significance.

Rules Going Into Effect Today

INTERIOR DEPARTMENT

Fish and Wildlife Service—

56668 8-25-80 / Provisions for importation, exportation, and transportation of wildlife

Hearings and Appeals Office—

56347 8-25-80 / Department hearings and appeals procedures

Deadlines for Comments on Proposed Rules for the Week of September 28 through October 4, 1980

AGRICULTURE DEPARTMENT

Animal and Plant Health Inspection Service—

51176 8-1-80 / Domestic quarantine notices; Gypsy moth and browntail moth; list of hazardous recreational vehicle sites; comments by 10-1-80

50318 7-29-80 / Restriction of interstate movement of certain articles from areas in Los Angeles County and Santa Clara County in California because of occurrence of the Mediterranean fruit fly (final rule); comments by 9-29-80

Federal Crop Insurance Corporation—

51573 8-4-80 / Western U.S. apple crop insurance regulations; comments by 10-3-80

Food and Nutrition Service—

51216 8-1-80 / Food Stamp Program: resource exclusion of trust funds; comments by 10-1-80

Food Safety and Quality Service—

61314 9-16-80 / Food grading policy; comments by 10-1-80

[*See also* 45 FR 36417-36427, 5-30-80]

51217 8-1-80 / Inspection and grading services and standards of manufactured or processed dairy products; comments by 9-30-80

59325 9-9-80 / U.S. standards for grades of frozen green beans and frozen wax beans; comments by 9-30-81

Forest Service—

56082 8-22-80 / Timber management planning; comments by 9-30-80

Rural Electrification Administration—

57727 8-29-80 / Electric loan policies and application procedures for supplemental resources loans; comments by 9-29-80

CIVIL AERONAUTICS BOARD

51838 8-5-80 / Navigation of foreign civil aircraft within the U.S.; comments by 9-30-80

COMMERCE DEPARTMENT

National Oceanic and Atmospheric Administration—

48172 7-18-80 / Atlantic groundfish, permit sanctions; comments by 10-1-80

35844 5-28-80 / Fish blocks and fillets; clarification of labeling requirements; comments by 9-30-80

Office of the Secretary—

51592 8-4-80 / Federal voluntary standards policy; rebuttal comments by 10-2-80

COMMODITY FUTURES TRADING COMMISSION

51600 8-4-80 / Revisions of commodity pool operator and commodity trading advisor regulations; comments by 9-30-80

51598 8-4-80 / Revision of requirements for monthly and confirmation statements; comments by 9-30-80

COMMUNITY SERVICES ADMINISTRATION

58534 9-4-80 / Emergency energy conservation program; funding requirements for Fiscal Year 1981 Crisis Intervention Program (Final Rule); comments by 9-29-80

EDUCATION DEPARTMENT

51243 8-1-80 / Basic educational opportunity grant program; family contribution schedules; comments by 9-30-80

ENERGY DEPARTMENT

Federal Energy Regulatory Commission—

58368 9-3-80 / Exemption from the Federal Power Act of small hydroelectric power projects with a proposed installed capacity of 5 megawatts or less; comments by 9-29-80

56072 8-22-80 / High-cost gas produced from tight formations; comments by 9-29-80

ENVIRONMENTAL PROTECTION AGENCY

58146 9-2-80 / Approval and promulgation of implementation plan revisions; Illinois; comments by 10-2-80

51620 8-4-80 / Approval and promulgation of secondary nonattainment plans for Iowa; comments by 10-3-80

57459 8-28-80 / Massachusetts air quality implementation plans; approval and promulgation; comments by 9-29-80

50833 7-31-80 / National interim primary drinking water regulations; variances; comments by 9-29-80

57458 8-28-80 / North Carolina air quality implementation plans, approval and promulgation; comments by 9-29-80

58495 9-3-80 / Oxyfluorfen; proposed food additive tolerance; comments by 10-3-80

58500 9-3-80 / Oxyfluorfen; proposed tolerances; comments by 10-3-80

58497 9-3-80 / Oxyfluorfen; proposed tolerance; comments by 10-3-80

58381 9-3-80 / State Implementation Plan requirements; proposed amendment to delayed compliance order, Florida Power Corp.-Crystal River Plant near Red Level, Fla.; comments by 10-3-80

58923 9-5-80 / Wisconsin State Implementation Plan; comments extended to 10-3-80

[Originally published at 45 FR 45318, 7-3-80]

FEDERAL COMMUNICATIONS COMMISSION

32013 5-15-80 / Allocating spectrum in the 928-941 MHz band and to establish other rules, policies, and procedures for one-way paging stations in the Domestic Public Mobile Radio Service and the Private Land Mobile Radio Services; reply comments by 9-30-80

37468 6-3-80 / Availability of additional FM frequencies and modification of procedures used in assigning such channels; comments by 10-1-80

[*See also* 45 FR 17602, 3-19-80 and 45 FR 26390, 4-18-80]

53844 8-13-80 / Biomedical telemetry operations; amendments; reply comments by 9-30-80

52843 8-8-80 / FM broadcast station in Greybull, Wyo.; proposed changes in table of assignments; comments by 9-29-80

52846 8-8-80 / FM broadcast station in Hugoton, Kans.; proposed changes in table of assignments; comments by 9-29-80

49626 7-25-80 / FM broadcast station in Laurel Hill, N.C.; proposed changes in table of assignments; reply comments by 10-1-80

52845 8-8-80 / FM broadcast station in Ogallala, Nebr.; proposed changes in table of assignments; comments by 9-29-80

55241 8-19-80 / FM broadcast stations in Pasco, Wash.; table of assignments; comments by 10-3-80

52848 8-8-80 / FM broadcast station in Petersburg, Ill.; proposed changes in table of assignments; comments by 9-29-80

49625 7-25-80 / FM broadcast stations in Rhinelander, Tomahawk, Washburn, and Wausau, Wis.; proposed changes in table of assignments; rely comments by 10-1-80

49624 7-25-80 / MTS and WATS market structure; compensation for uses of local telephone exchange facilities for interstate or foreign telecommunications; reply comments extended to 9-30-80

[*See also* 45 FR 20142, 3-27-80 and 45 FR 26274, 4-21-80]

58150 9-2-80 / 9 kHz channel spacing for AM broadcasting; comments by 10-1-80

58608 9-4-80 / Regulatory policies concerning resale and shared use of common carrier international communications services; reply comments by 9-29-80

[*See also* 45 FR 51251, 8-1-80]

47444 7-15-80 / Revision of applications for renewal of license of commercial and noncommercial AM, FM and television licensees; comments by 10-1-80

FEDERAL EMERGENCY MANAGEMENT AGENCY

59344 9-9-80 / Implementation of State assistance program for training and education in emergency management; comments by 9-30-80

FEDERAL HOME LOAN BANK BOARD

50797 7-31-80 / Reserve accounts; net worth requirements; comments by 9-29-80

FEDERAL TRADE COMMISSION

51596 8-4-80 / Benton & Bowles Inc., consent agreement with analysis to aid public comment; comments by 10-3-80

50814 7-31-80 / Oral presentations before the Commission and communications with Commissioners and their staffs in trade regulation rulemaking proceedings; comments by 9-29-80

51593 8-4-80 / Smith Kline Corp., consent agreement with analysis to aid public comment; comments by 9-30-80

HEALTH AND HUMAN SERVICES DEPARTMENT

Food and Drug Administration—

57711 8-29-80 / Antioxidants and/or stabilizers for polymers; indirect food additives; objections by 9-29-80

58841 9-5-80 / Investigational device exemptions; comments on corrections by 10-4-80

[*See also* 45 FR 3732, 1-16-80]

51226 8-1-80 / Leukocyte typing serum; Revocation of additional standards; Transfer of responsibility from the Bureau of Biologics to the Bureau of Medical Devices; comments by 9-30-80

50359 7-29-80 / Microwave diathermy products; performance standard; comments by 9-29-80

[Corrected at 45 FR 58143, 9-2-80]

Public Health Service—

51241 8-1-80 / Grants for various health manpower projects; comments by 9-30-80

HOUSING AND URBAN DEVELOPMENT DEPARTMENT

Federal Housing Commissioner—Office of Assistant Secretary for Housing—

58337 9-3-80 / Fair market rents for new construction and substantial rehabilitation, Philadelphia, Pa.; comments by 10-3-80

51615 8-4-80 / Low income public housing lease and grievance procedures; comments by 10-3-80

50560 7-30-80 / Mortgage and loan insurance programs; requirements for mortgagee approval; interim rule; comments by 9-29-80

INTERIOR DEPARTMENT

Fish and Wildlife Service—

56117 8-22-80 / Proposal to permit commercial importation of kangaroos; comments from 9-16 through 10-1-80

Heritage Conservation and Recreation Service—

58339 9-3-80 / Urban Park and Recreation Recovery Program; comments by 10-3-80

JUSTICE DEPARTMENT

Immigration and Naturalization Service—

51580 8-4-80 / Tightening of requirements for aliens accompanying nonimmigrant aliens of distinguished merit and ability; comments by 10-3-80

LABOR DEPARTMENT

Pension and Welfare Benefit Programs Office—

51231 8-1-80 / Reporting and disclosure and minimum standards for employee pension benefit plans; Individual benefit reporting and record keeping for single employer plans; comments by 10-1-80

[Corrected at 45 FR 54370, 8-15-80 (2 documents)]

MANAGEMENT AND BUDGET OFFICE

Federal Procurement Policy Office—

51253 8-1-80 / Organizational conflicts of interest; Availability of draft Federal acquisition regulations; comments by 10-1-80

NUCLEAR REGULATORY COMMISSION

54708 8-15-80 / Functional criteria for emergency response facilities; comments by 9-29-80

50350 7-29-80 / Modification of the policy and regulatory practice governing the siting of nuclear power reactors; comments by 9-29-80

PERSONNEL MANAGEMENT OFFICE

50336 7-29-80 / Freedom of Information Act; implementation of changes in fee schedule; comments by 9-29-80

50534 7-29-80 / Office of Government Ethics; establishment; procedures; comments by 9-29-80

50336 7-29-80 / Within grade increases and quality step increases; comments by 9-29-80

SECURITIES AND EXCHANGE COMMISSION

45554 7-3-80 / Regulatory reform and review; listing of certain regulatory matters and related information; comments by 10-1-80

TRANSPORTATION DEPARTMENT

Coast Guard—

54057 8-14-80 / Navigation safety; electronic relative motion analyzer in self propelled vessels of 10,000 gross tons or more carrying hazardous materials; comments by 9-29-80

54776 8-18-80 / Temporary licenses and endorsements provisions; comments by 10-2-80

Federal Aviation Administration—

50810 7-31-80 / Aircraft identification and registration; marking, size requirements; comments by 9-29-80

[Corrected at 45 FR 54766, 8-18-80]

National Highway Traffic Safety Administration—

45334 7-3-80 / Federal motor vehicle safety standards; lamps, reflective devices, and associated equipment; comments by 10-1-80

TREASURY DEPARTMENT

Fiscal Service—

57747 8-29-80 / Regulations governing United States Treasury Certificates of indebtedness, notes and bonds—State and local government series; comments by 9-30-80

Internal Revenue Service—

58143 9-2-80 / Voluntary employee's beneficiary associations; comments by 9-30-80

Monetary Offices—

50368 7-29-80 / Transactions in foreign exchange, transfer of credit and export of coin and currency; form revisions; comments by 9-29-80

VETERANS ADMINISTRATION

50369 7-29-80 / Veterans benefits; service during World War II in the Women's Army Auxiliary Corps (WAAC); comments by 9-28-80

50369 7-29-80 / Veterans education; measurement of internship and residency courses; comments by 9-28-80

Deadlines for Comments On Proposed Rules for the Week of October 5 through October 11, 1980

ADMINISTRATIVE CONFERENCE OF THE UNITED STATES

61636 9-17-80 / Eliminating or simplifying the "race to the courthouse" in appeals from agency orders; draft recommendations; comments by 10-10-80

AGRICULTURE DEPARTMENT

Agricultural Stabilization and Conservation Service—

52817 8-8-80 / 1981 extra long staple cotton program; proposed determinations regarding national marketing quota, national acreage allotment, and other related provisions; comments by 10-7-80

Animal and Plant Health Inspection Service—

52816 8-8-80 / West Indian sugarcane bores; comments by 10-7-80

Federal Grain Inspection Service—

52339 8-6-80 / Proposed revisions to Warehouseman's Sample—Lot Inspection Certificate; comments by 10-6-80

Food and Nutrition Service—

53066 8-8-80 / Food stamp program; work registration and job search requirements; comments by 10-7-80

Alaska Natural Gas Transportation System, Federal Inspector Office—

60362 9-11-80 / Enforcement procedures for equal opportunity regulations; comments by 10-10-80

COMMERCE DEPARTMENT

National Oceanic and Atmospheric Administration—

61341 9-16-80 / Proposed closure of the fishery conservation zone (FCZ) area offshore and north of Atlantic City, N.J. to surf clam fishing; comments by 10-6-80

58632 9-4-80 / Regional Fishery Management Councils; Intercouncil Boundaries; comments by 10-6-80

COMMODITY FUTURES TRADING COMMISSION

62847 9-22-80 / Minimum financial and related reporting requirements for futures commission merchants; comments extended to 10-8-80

[*See also* 45 FR 42633, 6-25-80]

EDUCATION DEPARTMENT

Office of the Secretary—

52136 8-5-80 / Instructional media for the handicapped; comments by 10-6-80

52052 8-5-80 / Nondiscrimination under programs receiving Federal assistance through the Department of Education; comments by 10-6-80

ENERGY DEPARTMENT

Economic Regulatory Administration—

54688 8-15-80 / Mandatory petroleum price regulations; Tertiary incentive program amendments; comments by 10-10-80

ENVIRONMENTAL PROTECTION AGENCY

59591 9-10-80 / Approval and promulgation of implementation plans; Lake Tahoe Basin Nonattainment Area Plans and Regulations in the States of California and Nevada; comments by 10-10-80

59597 9-10-80 / Approval and promulgation of nonattainment plan for Illinois; comments by 10-10-80

59334 9-9-80 / Approval and promulgation of implementation plans; nonattainment area plans; Nevada; comments by 10-9-80

58598 9-4-80 / Approval of revisions of Georgia State Implementation Plan regarding Part D, Title I, Clean Air Act for particulate nonattainment areas in Atlanta and Savannah; comments by 10-6-80

58883 9-5-80 / California State Implementation Plan; Sacramento Valley Air Basin Nonattaimment Area Plan; approval and promulgation of implementation plan; comments by 10-6-80

58881 9-5-80 / Colorado State Implementation Plan; approval and promulgation; comments by 10-6-80

52841 8-8-80 / Designation of areas for air quality planning purposes Indiana; comments by 10-7-80

59907 9-11-80 / Hazardous substances and determination of reportable quantities; addition of carcinogens; comments extended to 10-8-80

[*See also* 45 FR 46094 and 46097, 7-9-80]

58896 9-5-80 / Illinois Nonattainment Plan; approval and promulgation; comments by 10-6-80

59179 9-8-80 / New Mexico; designation of areas for air quality planning purposes; comments by 10-8-80

59179 9-8-80 / Oklahoma; designation of areas for air quality planning purposes; comments by 10-8-80

58599 9-4-80 / Proposed corrections to conditionally approved portions of Delaware State Implementation Plan; comments by 10-6-80

53187 8-11-80 / Provisions to implement the municipal wastewater treatment works construction grants program and the National Environmental Policy Act; comments by 10-10-80

58897 9-5-80 / San Joaquin Valley Air Basin Nonattainment Area Plan; approval and promulgation of implementation plans; comments by 10-6-80

58912 9-5-80 / South Central Coast Air Basin Nonattainment Area Plan; approval and promulgation of implementation plans; comments by 10-6-80

59341 9-9-80 / State and Federal administrative orders permitting a delay in compliance with State implementation plan requirements; Guam Power Authority; comments by 10-9-80

59329 9-9-80 / State implementation plan to control particulate emissions from iron and steel processes; Michigan; comments by 10-9-80

51855 8-5-80 / Toxic Substances Control Act; records and reports of allegations of significant adverse reactions to health or the environment; corrections; comments by 10-9-80

47008 7-11-80 / Toxic substances; keeping of records and reports of allegations of significant adverse reactions to health or environment; comments by 10-9-80

58600 9-4-80 / Tolerance for herbicide and plant regulator trifluralin in or on upland cress at 0.05 part per million; comments by 10-6-80

FEDERAL COMMUNICATIONS COMMISSION

54784 8-18-80 / Amendment of computing devices rules clarifying which electronic games are exempted from Commission certification; reply comments by 10-7-80

54786 8-18-80 / Amendment of Form 324, annual financial report of broadcast stations; comment period extended to 10-9-80

[*See also* 45 FR 35370, May 27, 1980]

47445 7-15-80 / Cable television systems and postponement of divestiture requirement relative to prohibited cross ownership in existence on or before July 1, 1970; comments by 10-6-80

55239 8-19-80 / FM broadcast station in Ladysmith, Wis.; table of assignments; comments by 10-6-80

55240 8-19-80 / FM broadcast station in Smithfield, Utah; table of assignments; comments by 10-6-80

55238 8-19-80 / FM broadcast station in Spokane, Wash.; comments by 10-6-80.

50373 7-29-80 / FM broadcast stations in Uvalde, Crystal City and Pearsall, Tex.; changes in table of assignments; reply comments by 10-6-80

55237 8-19-80 / FM broadcast station in Wray, Colo.; table of assignments; comments by 10-6-80

60955 9-15-80 / Interface of the International Telex Service with the Domestic Telex and TWX services; reply comments by 10-8-80

42753 6-25-80 / TV broadcast stations in Santa Barbara, Calif.; reply comments by 10-6-80

[*See* 45 FR 28770, 4-30-80]

55245 8-19-80 / Use of digital voice modulation in the Power Radio Service; comments by 10-8-80

FEDERAL EMERGENCY MANAGEMENT AGENCY

59346 9-9-80 / National Flood Insurance Program; comments by 10-9-80

FEDERAL HOME LOAN BANK BOARD

52177 8-6-80 / Federally-chartered Savings and Loan Associations and Mutual Savings Banks; investment in consumer loans, commercial paper and corporate debt securities; comments by 10-6-80

52173 8-6-80 / Revision of real estate lending regulations; comments by 10-6-80

FEDERAL MARITIME COMMISSION

58923 9-5-80 / Agreements approved pursuant to section 15 of the Shipping Act, 1916; time for filing and commenting; comments by 10-6-80

FEDERAL TRADE COMMISSION

51838 8-5-80 / Guides against deceptive advertising of guarantees; comments by 10-6-80

52750 8-7-80 / Sale of used motor vehicles; information disclosure window stickers; comments by 10-7-80

HEALTH AND HUMAN SERVICES DEPARTMENT

Food and Drug Administration—

58835 9-5-80 / Bakers yeast glycan; Food additives permitted for direct addition to food for human consumption; objections by 10-6-80

58836 9-5-80 / Polysorbate 60; food additives permitted for direct addition to food for human consumption; objections by 10-6-80

58835 9-5-80 / Polysorbate 80; food additives permitted for direct addition to food for human consumption; objections by 10-6-80

58837 9-5-80 / Polyoxymethylene homopolymer; antioxidants and/or stabilizers for polymers; objections by 10-6-80

Health Care Financing Administration—

53189 8-11-80 / Revision of provisions establishing guidelines for designation of professional standards review organization areas; comments by 10-10-80

HOUSING AND URBAN DEVELOPMENT

Community Planning and Development, Office of Assistant Secretary for—

52762 8-7-80 / Urban homesteading program; comments by 10-6-80

Federal Housing Commissioner, Office of Assistant Secretary for Housing—

52371 8-7-80 / Low-income public housing; PHA owned projects; continued operation after completion of debt service; comments by 10-6-80

INTERIOR DEPARTMENT

Fish and Wildlife Service—

59603 9-10-80 / Addition of National Wildlife Refuges to the list of open areas; migratory game bird hunting, upland game hunting, big game hunting, and sport fishing; comments by 10-10-80

Heritage Conservation and Recreation Service—

59590 9-10-80 / Criteria for comprehensive Statewide historic surveys and plans; comments by 10-10-80

51843 8-5-80 / National Register of Historic Places; comments by 10-6-80

Indian Affairs Bureau—

53164 8-11-80 / Indian mineral development regulations; comments by 10-10-80

Land Management Bureau—

52303 8-6-80 / Alaska Native Allotment Act; requirements for occupancy and use of native allotment; comments by 10-6-80

INTERSTATE COMMERCE COMMISSION

57153 8-27-80 / Accounting and reporting of railroads' freight train car repair costs; comments by 10-6-80

59909 9-11-80 / Freight forwarder contract rates; implementation of Pub. L. 96-296; comments extended to 10-10-80

[*See also* 45 FR 53190, 8-11-80]

55734 8-21-80 / Motor carrier rate bureaus, requirements and standards for continued immunity from antitrust laws; (implementation of Pub. L. 96-296); comments by 10-6-80

58632 9-4-80 / Traffic protective conditions in railroad consolidation proceedings; comments extended to 10-8-80

[*See also* 45 FR 46461, 7-10-80 and 45 FR 56849, 8-26-80]

LABOR DEPARTMENT

Pension and Benefit Welfare Program Office—

52824 8-8-80 / Individual benefit reporting and recordkeeping for multiple employer plans; comments by 10-7-80

SECURITIES AND EXCHANGE COMMISSION

56822 8-26-80 / Self-regulatory organizations; record retention, production, and destruction; comments by 10-10-80

TRANSPORTATION DEPARTMENT

Coast Guard—

56365 8-25-80 / Inland waterways navigation regulations applicable to Great Lakes Region; comments by 10-9-80

55768 8-21-80 / Vessels; application for certificate of number, change in rquired contents; comments by 10-6-80

Federal Aviation Department—

53316 8-11-80 / Air taxi operators and commercial operators; flight crew member flight and duty time limitations and rest requirements; initial comments by 10-10-80

59905 9-11-80 / Petition for ruelmaking by Air Transport Association of America regarding ozone concentration in cabin; comments by 10-10-80

Federal Highway Administration—

39872 6-12-80 / Qualifications of drivers; comments by 10-10-80

National Highway Traffic Safety Administration—

46459 7-10-80 / Evaluation of Federal motor vehicle safety and fuel economy standards; comments by 10-8-80

TREASURY DEPARTMENT

Internal Revenue Service—

51840 8-5-80 / Generation-skipping transfer tax regulations under the Tax Reform Act of 1976; Return requirements; comments by 10-6-80

52399 8-7-80 / Income tax; deductions for business use or rental of dwelling unit; comments by 10-6-80

Next Week's Meetings

AGRICULTURE DEPARTMENT

Science and Education Administration—

59930 9-11-80 / Cooperative Forestry Research Advisory Board, Spokane, Wash. (open), 10-2-80

ARTS AND HUMANITIES NATIONAL FOUNDATION

59457 9-9-80 / Dance Panel (choreography fellowships), Washington, D.C., (closed), 9-29 thru 10-2-80

56475 8-25-80 / Humanities Panel, Washington, D.C. (closed), 10-1-80

61051 9-15-80 / Humanities Panel, Washington, D.C. (closed), 10-2-80

60052 9-11-80 / Joint meeting of the Media Arts and Design Arts Panels, Washington, D.C. (closed), 9-29 and 9-30-80

60052 9-11-80 / Visual Arts Panel, Washington, D.C. (closed), 9-29 and 9-30-80

COMMERCE DEPARTMENT

Census Bureau—

61344 9-16-80 / Population Statistics Census Advisory Committee, Suitland Md. (open), 10-2-80

Martime Administration—

59935 9-11-80 / Merchant Marine Academy Advisory Board, Kings Point, N.Y. (open), 10-3-80

National Oceanic and Atmospheric Administration—

59935 9-11-80 / Caribbean Fishery Management Council, Charlotte Amalie, St. Thomas, U.S. Virgin Islands (open), 9-30 through 10-2-80

62174 9-18-80 / Mid-Atlantic Fishery Management Council's Recreational Fishery and Other Species Oversight Committee, Dover, Del. (open), 10-3-80

59935 9-11-80 / Mid-Atlantic Fishery Management Council's Scientific and Statistical Committee, Essington, Penn. (open), 10-1-80

60957 9-15-80 / Reducing sea turtle mortality in Southeastern U.S. waters, Atlanta, Ga., 10-2-80

DEFENSE DEPARTMENT

Army Department—

58932 9-5-80 / Board of Visitors, United States Military Academy, West Point, N.Y. (open), 10-2 through 10-4-80

Office of the Secretary—

49321 7-24-80 / DOD Wage Committee, Washington, D.C. (closed), 9-30-80

59192 9-8-80 / Defense Science Board Task Force on ECM, Washington, D.C. (closed), 10-2 through 10-3-80

59377 9-9-80 / Defense Science Board Task Force on EMP Hardening of Aircraft, Albuquerque, N.M. (closed), 9-30 and 10-1-80

EDUCATION DEPARTMENT

59939 9-11-80 / Intergovernmental Advisory Council on Education, Washington, D.C. (open), 9-30-80

[Relocated; *see* 45 FR 62521, 9-19-80]

ENERGY DEPARTMENT

58654 9-4-80 / National Petroleum Council, Subcommittee on Arctic Oil and Gas Resources, Washington, D.C. (open), 10-3-80

59940 9-11-80 / National Petroleum Council Coordinating Subcommittee of the Committee on Arctic Oil and Gas Resources, Washington, D.C. (open), 10-3-80

54428 8-15-80 / Oil and gas operations in portions of the Gulf of Mexico, New Orleans, La., 10-1-80; Galveston, Tex., 10-2-80

FEDERAL COMMUNICATIONS COMMISSION

61025 9-15-80 / Radio Technical Commission for Marine Services, Washington, D.C. (open), 10-2-80

GOVERNMENT PRINTING OFFICE

49680 7-25-80 / Depository Library Council to the Public Printer, Alexandria, Va. (open), 9-29 through 10-1-80

HEALTH AND HUMAN SERVICES DEPARTMENT

Food and Drug Administration—

56192 8-22-80 / Consumer exchange, Cincinnati, Ohio (open), 10-1 and 10-2-80 (2 documents)

Food and Drug Administration—

56192 8-22-80 / Consumer exchange New York, N.Y. (open), 9-30-80

54443 8-15-80 / Miscellaneous Internal Drug Products Panel, Chevy Chase, Md. (open), 9-28-80; Rockville, Md. (open), 9-29-80

Health Resources Administration—

58208 9-2-80 / Health Careers Opportunity Program, grant orientation conference, Atlanta, Ga. (open), 10-2 and 10-3-80

National Institutes of Health—

47923 7-17-80 / Arteriosclerosis, Hypertension, and Lipid Metabolism Advisory Committee, Bethesda, Md. (open), 9-30-80

59204 9-8-80 / Board of Scientific Counselors, Division of Cancer Treatment, Bethesda, Md. (partially open), 10-2 and 10-3-80

53876 8-13-80 / Cancer Cause and Prevention Division, Board of Scientific Counselors, Bethesda, Md. (open), 9-29 and 9-30-80

56447 8-25-80 / Microbiology and Infections Diseases Advisory Committee, Bethesda, Md. (partially open), 10-2 and 10-3-80

56448 8-25-80 / National Advisory Allergy and Infectious Diseases Council, Hamilton, Montana (open), 9-29 and 9-30-80

56449 8-25-80 / National Advisory Neurological and Communicative Disorders and Stroke Council, Bethesda, Md. (partially open), 10-1-80

56448 8-25-80 / National Advisory Neurological and Communicative Disorders and Stroke Council, Bethesda, Md. (partially open), 10-2 and 10-3-80

47924 7-17-80 / National Cancer Institute, conference on carcinoembroynic antigen (CEA), Bethesda, Md. (open), 9-29 through 10-1-80

INTERIOR DEPARTMENT

Fish and Wildlife Service—

57680 8-28-80 / Designation of critical habitat for the endangered Maryland darter, Aberdeen Proving Ground, Md. (open), 9-30-80

Land Management Bureau—

56195 8-22-80 / APS/SDG&E Interconnection Project (open):

Phoenix, Ariz., 10-1-80

Yuma, Ariz., 10-2-80

61031 9-15-80 / Cal-Neva Grazing Management Plan, Susanville, Calif., 9-30-80

58710 9-4-80 / Multiple Use Advisory Council, Moab, Utah (open), 10-2 and 10-3-80

58211 9-2-80 / Outer Continental Shelf Advisory Board, Mid-Atlantic Technical Working Group Committee, Wilmington, Del. (open), 9-29 and 9-30-80

58981 9-5-80 / Salmon District Advisory Council, Challis, Idaho (open), 10-2-80

58711 9-4-80 / Susanville District Advisory Council, Susanville, Calif. (open), 10-2 and 10-3-80

National Park Service—

61033 9-15-80 / Management of General Grant National Memorial, New York, N.Y. (open), 9-30-80

59434 9-9-80 / Santa Monica Mountains National Recreation Area Advisory Commission Malibu, Calif. (open), 9-30-80

JUSTICE DEPARTMENT

Juvenile Justice and Delinquency Prevention Office—

61049 9-15-80 / Coordinating Council on Juvenile Justice and Delinquency Prevention, Washington, D.C. (open), 9-30-80

LIBRARY OF CONGRESS

58450 9-3-80 / American Folklife Center; Board of Trustees, Washington, D.C. (open), 10-2-80

MANAGEMENT AND BUDGET OFFICE

58279 9-2-80 / National Agenda for the Eighties, President's Commission, New York, N.Y. (open), 9-30-80

60100 9-11-80 / National Agenda for the Eighties, President's Commission, Washington, D.C. (open), 10-3-80

NATIONAL SCIENCE FOUNDATION

59458 9-9-80 / Behavioral and Neural Sciences Subcommittee for Sensory Physiology and Perception, Washington, D.C. (partially open), 10-1 thru 10-3-80

61053 9-15-80 / Environmental Biology Advisory Committee Systematic Biology Subcommittee, Washington, D.C. (closed), 10-1 through 10-3-80

54492 8-15-80 / Ocean Sciences Advisory Committee, Oceanographic Instrumentation and Shipboard Technicians Subcommittee, Washington, D.C. (closed), 9-30 and 10-1-80

59460 9-9-80 / Physiology, Cellular, and Molecular Biology Advisory Committee, Cell Biology Subcommittee, Washington, D.C. (closed), 10-1 thru 10-3-80

NUCLEAR REGULATORY COMMISSION

62236 9-18-80 / Advisory Committee on Reactor Safeguards, Subcommittee on Waste Management, Washington, D.C. (open), 10-3-80

PENSION POLICY, PRESIDENT'S COMMISSION

61058 9-15-80 / Briefing on Social Security proposals, Washington, D.C. (open), 10-3-80

SMALL BUSINESS ADMINISTRATION

59468 9-9-80 / Region I Advisory Council, Boston, Mass. (open), 9-29-80

59467 9-9-80 / Region I Advisory Council, Augusta, Maine (open), 10-2-80

59468 9-9-80 / Region I Advisory Council, Providence, Rhode Island, (open), 10-3-80

56961 8-26-80 / Region IV Advisory Council, Birmingham, Alabama (open), 10-1-80

61060 9-15-80 / Region IV Advisory Council, Owensboro, Ky. (open), 10-2 and 10-3-80

61060 9-15-80 / Region VI Advisory Council, Little Rock, Ark. (open), 10-2-80

61844 9-17-80 / Small Business Continuity, Washington, D.C. (open), 10-3 and 10-4-80

STATE DEPARTMENT

Office of the Secretary

61061 9-15-80 / U.S. Section International North Pacific Fisheries Commission Advisory Committee, Juneau, Alaska (partially open), 10-2-80

TRANSPORTATION DEPARTMENT

Coast Guard—

57640 8-28-80 / National Boating Safety Advisory Council, Lusten, Minn. (open), 10-1 and 10-2-80

Federal Aviation Administration—

59243 9-8-80 / Radio Technical Commission for Aeronautics, Special Committee 145—Digital Avionics Softwear, Washington, D.C. (open), 9-30, 10-1 and 10-2-80

National Highway Traffic Safety Administration

59245 9-8-80 / Biomechanics Advisory Committee, Washington, D.C. (open), 10-2-80

61073 9-15-80 / Biomechanics Advisory Committee, Washington, D.C. (open), 10-2-80

43921 6-30-80 / Biomechanics Advisory Committee, Washington, D.C. (open), 10-2-80

Saint Lawrence Seaway Development Corporation—

62249 9-18-80 / Advisory Board, Washington, D.C. (open), 10-3-80

VETERANS ADMINISTRATION

59470 9-9-80 / Wage Committee, Washington, D.C. (closed), 10-2-80

Next Week's Public Hearings

COMMERCE DEPARTMENT

International Trade Administration—

53852 8-13-80 / Countertop microwave ovens from Japan; antidumping; Washington, D.C., 9-30-80

DEFENSE DEPARTMENT

Navy Department—

41691 6-20-80 / Naval Discharge Review Board, 9-29 through 10-10-80: Chicago, Ill., Minneapolis, Minn.

60467 9-12-80 / Naval Discharge Review Board, Chicago, Ill., Minneapolis, Minn., 9-29 through 10-10-80

DELAWARE RIVER BASIN COMMISSION

56862 8-26-80 / Spring Meadow Trout Hatchery, Limeport, Pa., 10-1-80

ENERGY DEPARTMENT

Economic Regulatory Administration—

57138 8-27-80 / Amendments to normal business practices rule, Houston, Tex., 10-2-80

ENVIRONMENTAL PROTECTION AGENCY

59630 9-10-80 / Determination to withdraw the specification; prohibit, restrict, or deny the specification of an area as a disposal site; Florida, North Miami Beach, Fla., 10-2 and if necessary 10-3-80

57169 8-27-80 / Proposed determination to prohibit or deny specification; or use of specification, of North Miami, Fla. as disposal site, Miami, Fla., 10-2-80

55083 8-18-80 / Proposed revision of the National Ambient Air Quality Standard for Carbon Monoxide, Washington, D.C. 10-2-80

INTERIOR DEPARTMENT

Land Management Bureau—

55283 8-19-80 / South Coast and Curry Sustained Yield Units Timber Management Plan, Coos Bay, Oregon, 10-1-80

Surface Mining Reclamation and Enforcement Office—

60495 9-12-80 / Surface coal mining operations; petition evaluation and environmental impact statement to designate certain Federal lands in Utah as unsuitable; Kanab, Utah, 9-29-80; Penguitch, Utah, 9-30-80

Water and Power Resources Service—

54452 8-15-80 / Proposed reauthorization of the Central Valley Project, Calif., draft environmental statement, Sacramento, Calif., 9-29-80

TRADE REPRESENTATIVE, OFFICE OF UNITED STATES

55668 8-20-80 / Generalize system of preferences; acceptance for review of petitions to modify the list of articles receiving duty-free treatment; Washington, D.C., 9-29-80

List of Public Laws

Note: No public bills which have become law were received by the Office of the Federal Register for inclusion in today's **List of Public Laws.**

[Last Listing September 23, 1980]

Documents Relating to Federal Grant Programs

This is a list of documents relating to Federal grant programs which were published in the **Federal Register** during the previous week.

RULES GOING INTO EFFECT

62071 9-18-80 / LSC—correction to bylaws of the Legal Services Corporation published 9-3-80 (45 FR 58363)

DEADLINES FOR COMMENTS ON PROPOSED RULES

60954 9-15-80 / CSA—Civil Rights Program requirements of CSA grantees; civil rights regulations; comments by 11-14-80

62506 9-19-80 / EPA—Kentucky air quality implementation plan; Federal assistance limitations; comments by 11-3-80

APPLICATIONS DEADLINES

61008 9-15-80 / Commerce/Sec'y—Cooperative generic technology program; proposals by 10-10-80

61347 9-16-80 / DOE—Solicitation announcement for loan guarantee applications for alcohol fuels, biomass energy and municipal waste energy projects; application by 10th day following the day of the effective date of final rule.

Note: Estimated publication date of final rule is between 10-1 and 10-15-80

61011 9-15-80 / ED—Basic skills and educational proficiency; State formula grant program and State leadership program; apply by 10-31-80

62178 9-18-80 / ED—Metric Education Program projects, apply by 11-25-80

62000 HHS/HDSO—Child Welfare Research and Demonstration Grant Program; apply by 12-1-80

61789 9-17-80 / HHS/NIOSH—Reproductive effects from occupational hazards; research and demonstrations; apply by 11-1-80, 3-1-81, and 7-1-81 (for various start dates)

61031 9-15-80 / HHS/PHS and HRA—Residency training in general internal medicine or general pediatrics; apply by 10-13-80

61262 9-15-80 / HUD/FHC—Solicitation to submit pilot project applications and preliminary guidelines for implementation of the existing multifamily housing demonstration application by 10-15-80

61800 9-17-80 / IDCA/AID—Housing guaranty program for Liberia, apply by 10-7-80

MEETINGS

62548 9-19-80 / HHS/ADAMHA—National Advisory bodies, various Washington D.C. metropolitan area locations, (partially open), October 1980

62560 9-19-80 / HHS/NIH—Advisory Committee to the Director, NIH, Bethesda, Md. (open), 10-20 and 10-21-81

61371 9-16-80 /HHS/NIH—Board of Scientific Counselors, National Institute of Neurological and Communicative Disorders and Stroke, Bethesda, Md. (partially open), 11-6 and 11-7-80

62562 9-19-80 / HHS/NIH—Cancer Biology and Diagnosis Division, Board of Scientific Counselors (partially open) 10-9 through 10-11-80

61371 9-16-80 / HHS/NIH—National Cancer Advisory Board and Board Subcommittee on Special Actions for Grants, Bethesda, Md., (partially open), 10-6 thru 10-8-80

62561 9-19-80 / HHS/NIH—National Cancer Institute advisory committees, Bethesda, Md. (partially open), October, November, and December 1980

62562 9-19-80 / HHS/NIH—National Heart, Lung, and Blood Institute, Board of Scientific Counselors, Bethesda, Md. (partially open), 11-13 and 11-14-80

62562 9-19-80 / HHS/NIH—National Institute of Dental Research Programs Advisory Committee, Dental Caries Subcommittee, Bethesda, Md. (partially open) 11-6 and 11-7-80

62562 9-19-80 / HHS/NIH—National Institute of Dental Research, Board of Scientific Counselors, Bethesda, Md. (partially open) 10-6 through 10-8-80

61051 9-15-80 / NFAH—Humanities Panel, Washington, D.C. (closed), 9-29-80

61051 9-15-80 / NFAH—Humanities Panel, Washington, D.C. (closed), 10-2-80

62229 9-18-80 / NFAH—Inter Arts Panel (Presenting Organizations), Washington, D.C. (closed), 10-7 through 10-9-80

62229 9-18-80 / NFAH—Literature Panel to the National Council on the Arts, Washington, D.C. (closed), 10-11-80

62230 9-18-80 / NFAH—Literature Panel (Translator's Fellowships), Washington, D.C. (partially open), 10-8 and 10-9-80

62230 9-18-80 / NFAH—Music Panel (Festivals Section), Washington, D.C. (partially open), 10-8 and 10-9-80

61651 9-17-80 / NFAH—Music Panel (Jazz Section), Washington, D.C. (partially open), 9-29 through 10-1-80

62230 9-18-80 / NSF—Advisory Committee for Materials Research, Subcommittee on Metallurgy, Polymers, and Ceramics, Washington, D.C. (closed), 10-9 and 10-10-80

61053 9-15-80 / NSF—Behavioral and Neural Sciences Advisory Committee, Psychobiology Subcommittee, Washington, D.C. (closed), 10-21 and 10-22-80

61052 9-15-80 / NSF—Environmental Biology Advisory Committee, Ecological Sciences Subcommittee, Washington, D.C. (closed), 10-8 through 10-10-80

61053 9-15-80 / NSF—Environmental Biology Advisory Committee, Population Biology and Physiological Ecology Subcommittee, Washington, D.C. (closed), 10-16 and 10-17-80

61053 9-15-80 / NSF— Environmental Biology Advisory Committee, Systematic Biology Subcommittee, Washington, D.C. (closed), 10-1 through 10-3-80

62231 9-18-80 / NSF—Ocean Sciences Division Ad Hoc Subcommittee, Annapolis, Md. (Closed), 10-8 and 10-9-80

61052 9-15-80 / NSF—Physiology, Cellular and Molecular Biology Advisory Committee, Biological Instrumentation Subcommittee, Washington, D.C. (closed), 10-30 and 10-31-80

61052 9-15-80 / NSF—Physiology, Cellular and Molecular Biology Advisory Committee, Cellular Physiology Subcommittee, Washington, D.C. (closed), 11-3 through 11-5-80

61052 9-15-80 / NSF—Physiology, Cellular and Molecular Biology Advisory Committee, Genetic Biology Subcommittee, Washington, D.C. (closed), 10-30 through 11-80

61053 9-15-80 / NSF—Physiology, Cellular and Molecular Biology Advisory Committee, Metabolic Biology Subcommittee, Washington, D.C. (closed), 10-30 and 10-31-80

62231 9-18-80 / NSF—Subcommittee for the Linguistics Program of the Advisory Committee for Behavioral and Neural Sciences, Washington, D.C. (closed), 10-11 and 10-17-80

OTHER ITEMS OF INTEREST

62176 9-18-80 / CSA—Extension of expiration date of Improving CSA Regulations order

61024 9-15-80 / EPA—Grants for construction of treatment works; industrial cost recovery provisions

61368 9-16-80 / HHS/FDA—Cooperative agreement to award financial assistance to the National Academy of Sciences (NAS) for the review and evaluation of scientific research on the nutrition of domestic animals

61791 9-17-80 / HHS/HDSO—Federal Allotments to States for personnel training or retraining; fiscal year 1981

61874 9-17-80 / HHS/NIH—First annual update of a program to assess the risks of recombinant DNA research; comments by 12-16-80

62595 9-19-80 / LSC—Grants and contracts; Carolina Regional Legal Services, Inc., Florence, South Carolina

61050 9-15-80 / LSC—Grants and contracts; Dallas Legal Services Foundation, Dallas, Tex.

61050 9-15-80 / LSC—Grants and contracts; East River Legal Services, Sioux Falls, S. Dak.

61051 9-15-80 / LSC—Grants and contracts; Guam Legal Services Corp.; Inc., Tamuning, Guam

62594 9-19-80 / LSC—Grants and contracts; Legal Aid of Western Missouri, Kansas City, Mo.

61050 9-15-80 / LSC—Grants and contracts; Legal Aid Society of Central Texas, Austin, Tex.

62595 9-19-80 / LSC—Grants and contracts; Legal Services of Northeast Missouri, Inc.

61050 9-15-80 / LSC—Grants and contracts; South Dakota Legal Services, Inc., Mission, S. Dak.

61050 9-15-80 / Grants and contracts; Waco-McLennan County Legal Aid, Waco, Tex.

62595 9-19-80 / LSC—Grants and contracts West Texas Legal Services, Fort Worth Tex.

THE FEDERAL REGISTER: WHAT IT IS AND HOW TO USE IT

FOR: Any person who uses the Federal Register and Code of Federal Regulations.

WHO: The Office of the Federal Register.

WHAT: Free public briefings (approximately 2½ hours) to present:

1. The regulatory process, with a focus on the Federal Register system and the public's role in the development of regulations.
2. The relationship between Federal Register and the Code of Federal Regulations.
3. The important elements of typical Federal Register documents.
4. An introduction to the finding aids of the FR/CFR system.

WHY: To provide the public with access to information necessary to research Federal agency regulations which directly affect them, as part of the General Services Administration's efforts to encourage public participation in Government actions. There will be no discussion of specific agency regulations.

WHEN: October 17 and 31; November 14 and 21; at 9 a.m. (identical sessions)

WHERE: Office of the Federal Register, Room 9409, 1100 L Street NW., Washington, D.C.

RESERVATIONS: Call King Banks, Workshop Coordinator, 202-523-5235.

would you like to know

if any changes have been made in certain titles of the CODE OF FEDERAL REGULATIONS without reading the Federal Register every day? If so, you may wish to subscribe to the LSA (List of CFR Sections Affected), the "Federal Register Index," or both.

LSA (List of CFR Sections Affected)
$10.00
per year

The LSA (List of CFR Sections Affected) is designed to lead users of the Code of Federal Regulations to amendatory actions published in the Federal Register, and is issued monthly in cumulative form. Entries indicate the nature of the changes.

Federal Register Index $8.00
per year

Indexes covering the contents of the daily Federal Register are issued monthly in cumulative form. Entries are carried primarily under the names of the issuing agencies. Significant subjects are carried as cross-references.

A finding aid is included in each publication which lists Federal Register page numbers with the date of publication in the Federal Register.

Note to FR Subscribers: FR Indexes and the LSA (List of CFR Sections Affected) will continue to be mailed free of charge to regular FR subscribers.

Mail order form to:
Superintendent of Documents, U.S. Government Printing Office, Washington, D.C. 20402

There is enclosed $_____ for _____ subscription(s) to the publications checked below:

..... **LSA (LIST OF CFR SECTIONS AFFECTED) ($10.00 a year domestic; $12.50 foreign)**

..... **FEDERAL REGISTER INDEX ($8.00 a year domestic; $10.00 foreign)**

Name _____

Street Address _____

City _____ **State** _____ **ZIP** _____

Make check payable to the Superintendent of Documents